GM 1500 | 14-18| 5’8” Bed Cap

Thank you for choosing Rough Country for all your vehicle needs.

Please read instructions before beginning installation. Check the kit hardware against the kit contents shown below. Be sure you have all needed parts and know where they go. If question exist, please call us @1-800-222-7023. We will be happy to answer any questions concerning this product. Check all fasteners for proper torque. Check to ensure for adequate clearance between all components. Periodically check all hardware for tightness.

Care and Cleaning

- Mild soap may be used also to clean the Product.
- Periodically check hardware for tightness.

Components

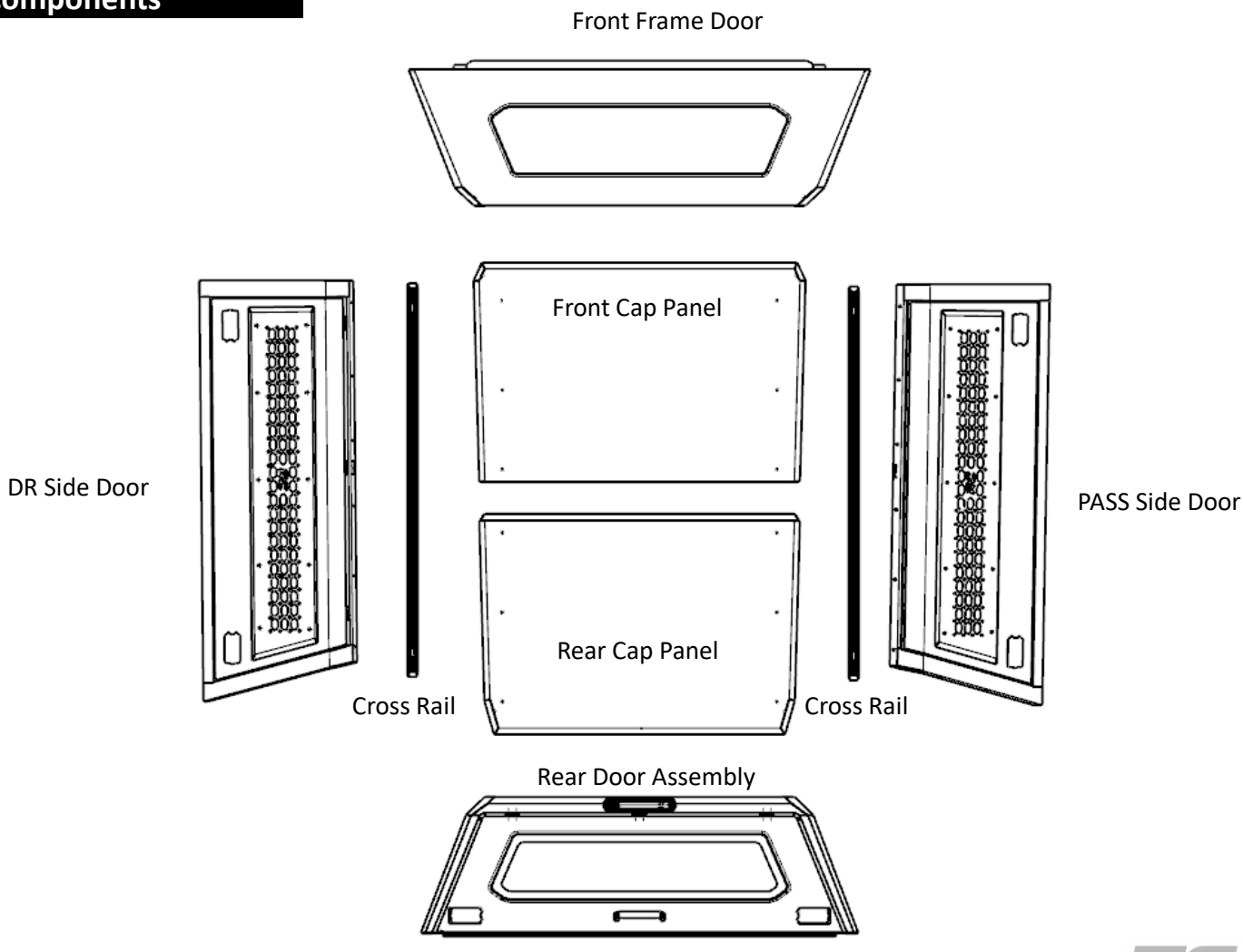

- **Hardware kits for the bed cap**

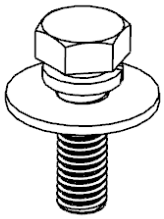

8mmx25mm Combo Kits X40



Sealing Strip X1

- **Bottom Sealing Strip、Bottom Short Pads、Foam Seal Tape**

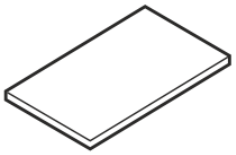

Black Short Pads X8

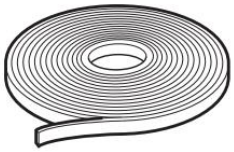

Foam Seal Tape X1



Adhesion promoter x1

- **Hardware kits for the Front/Rear Roof Top**

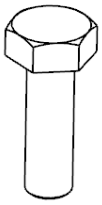

8mmx25mm Hex Bolts X5

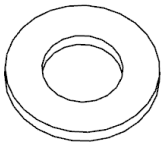

8mm Flat Washers X5

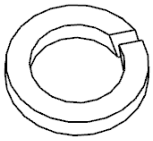

8mm Lock Washers X5

- **Hardware kits for the cross rail**

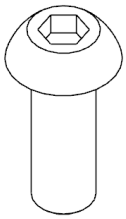

6mmx16mm Allen Bolts X12

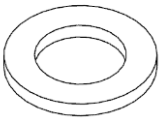

Plastic 6mm Flat Washers X12

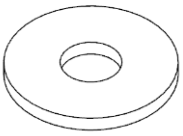

6mm Flat Washers X12

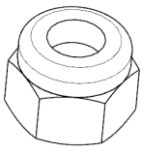

6mm Lock Nuts X12

- **Tools**

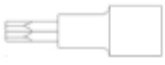

T-15 Socket



Rachet



Extensions



13mm Socket



10&13mm Wrench



S4

STEP 1

Install the front roof top bed cap panel and the rear roof top bed cap panel, align with each other and install hardware, do not tighten the hardware.



8mmx25mm Hex Bolts X5

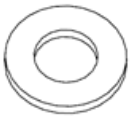

8mm Flat Washers X5



8mm Lock Washers X5

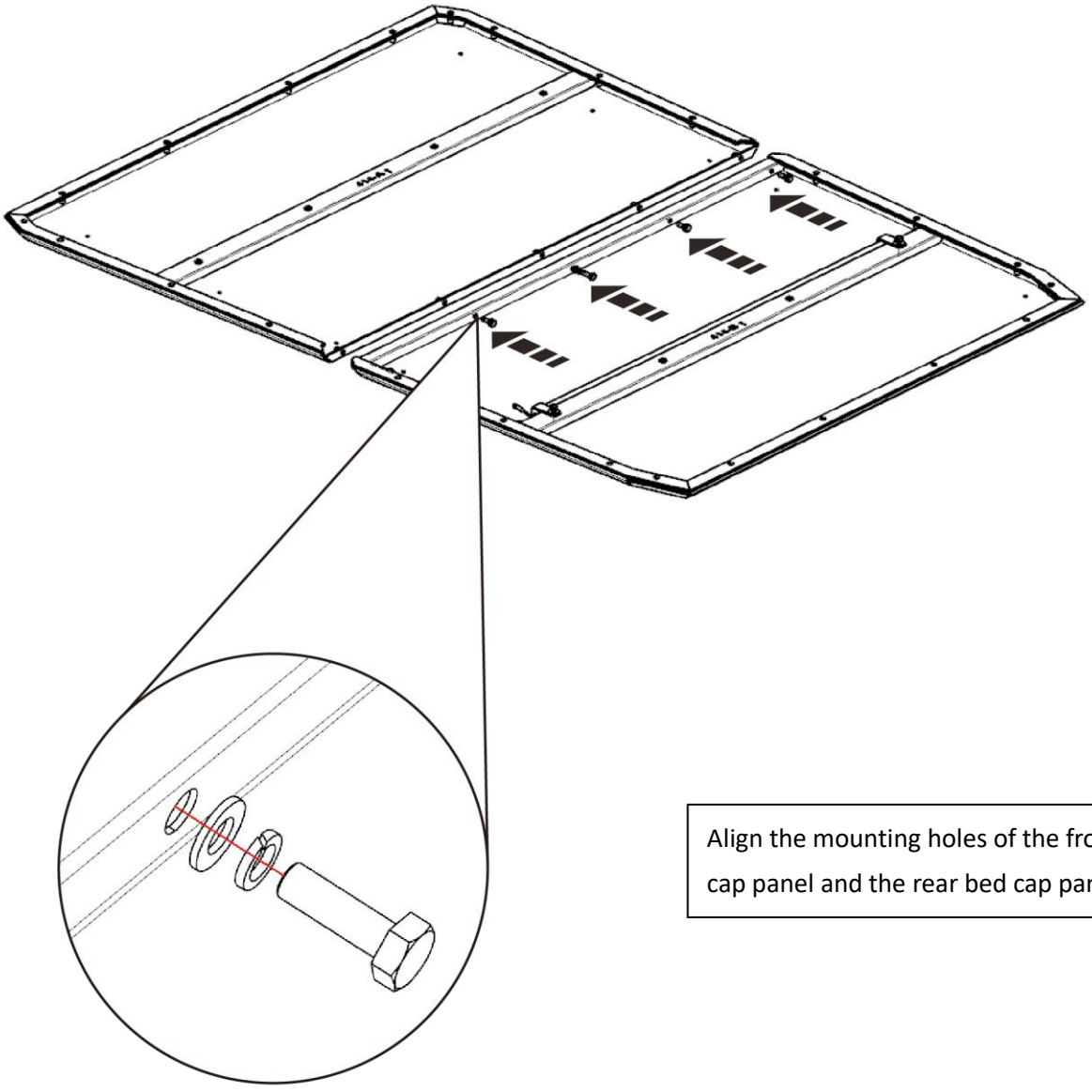

Align the mounting holes of the front bed cap panel and the rear bed cap panel

STEP 2

Install the Utility rail on the bed cap top panels by inserting the supplied 6 mm x 16 mm Bolts / 6 mm plastic washers in the rail from the top and secure the rail to the bed cap top panel with the 6 mm flat washers and 6 mm Flange lock nuts.

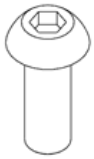

6mmx16mm Allen Bolts X12

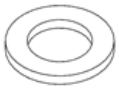

Plastic 6mm Flat Washers X12

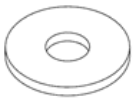

6mm Flat Washers X12



6mm Lock Nuts X12

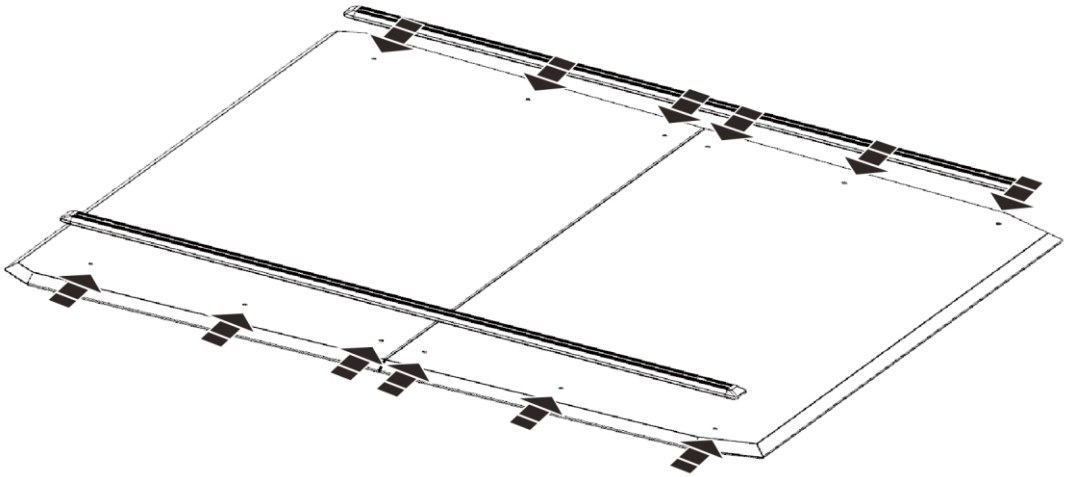

STEP 3

Install the DR Side Door to the bed cap roof panel, do not tighten the hardware.

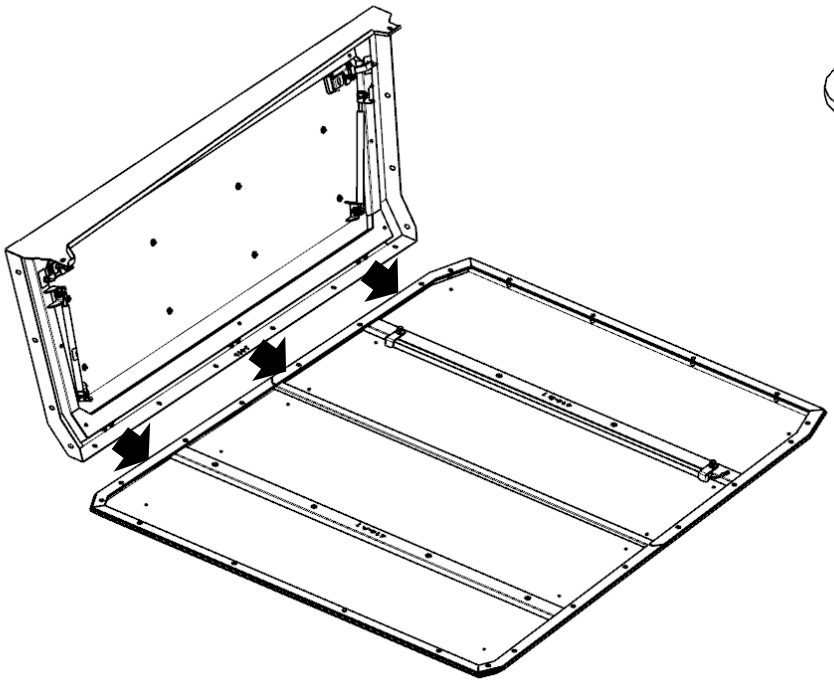

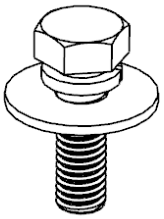

X 6

8 mm x 25 mm Bolt, Lock washer and Flat Washer

STEP 4

Install the PASS Side Door to the bed cap roof panel, do not tighten hardware.

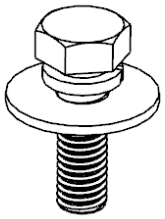

X 6

8 mm x 25 mm Bolt, Lock washer and Flat Washer

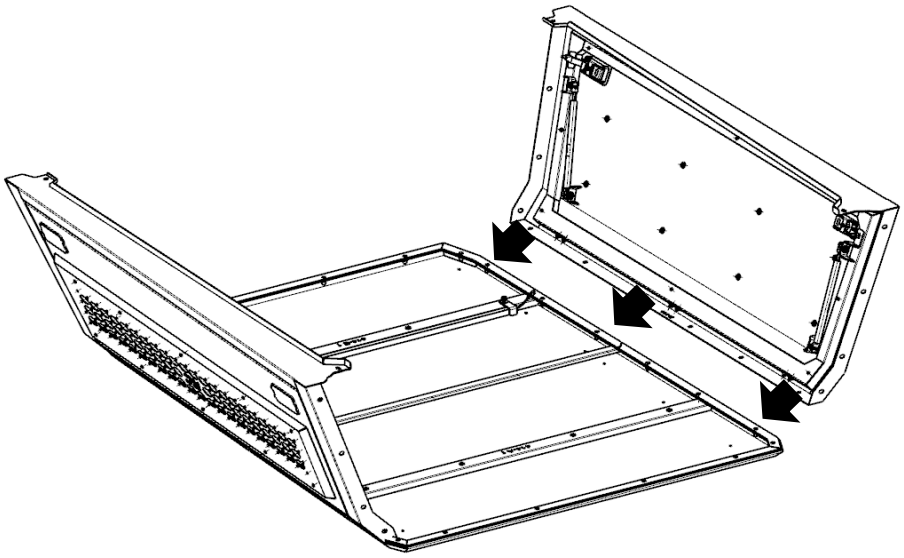

STEP 5

Install the front frame to the bed cap assembly, do not tighten the hardware.

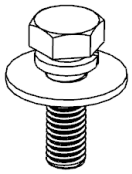

X 14

8 mm x 25 mm Bolt, Lock washer and Flat Washer

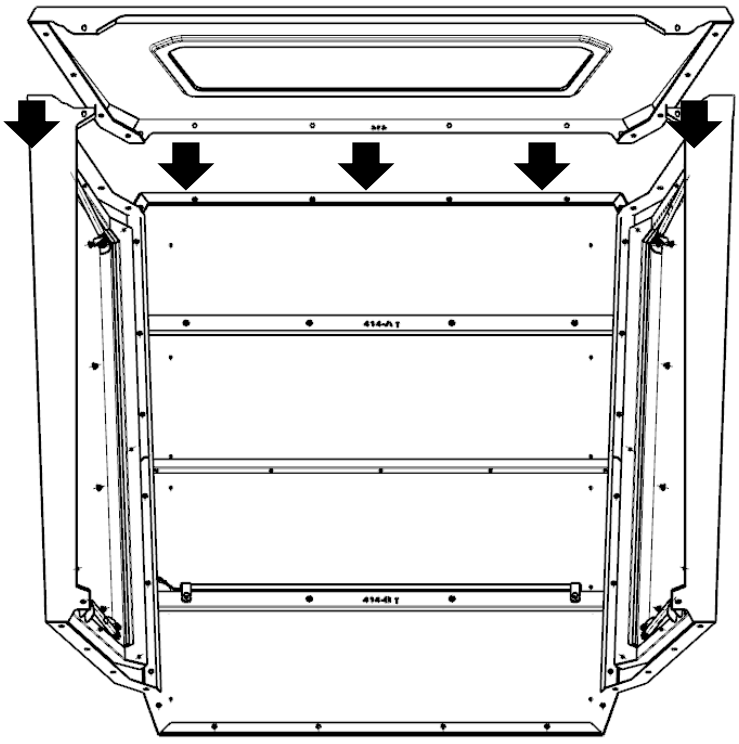

STEP 6

Install the rear door assembly to the bed cap assembly,
do not tighten the hardware.

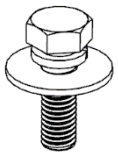

X 14

8 mm x 25 mm Bolt, Lock washer and Flat Washer

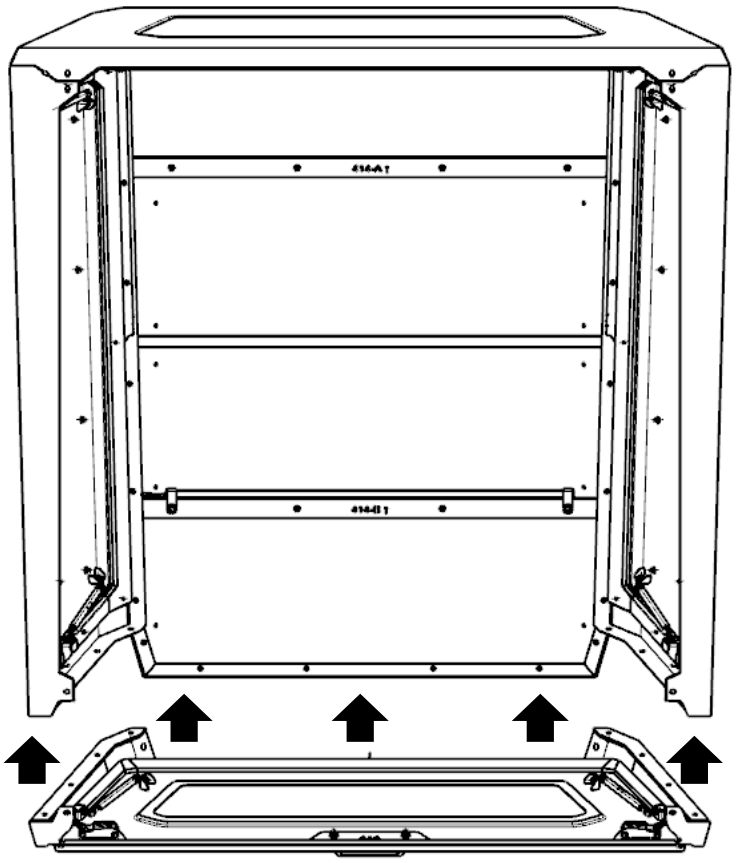

STEP 7

Adjust the gap of each panel ensuring the bolt holes / panels are aligned. Tighten hardware.
The same method will be used for the opposite side.

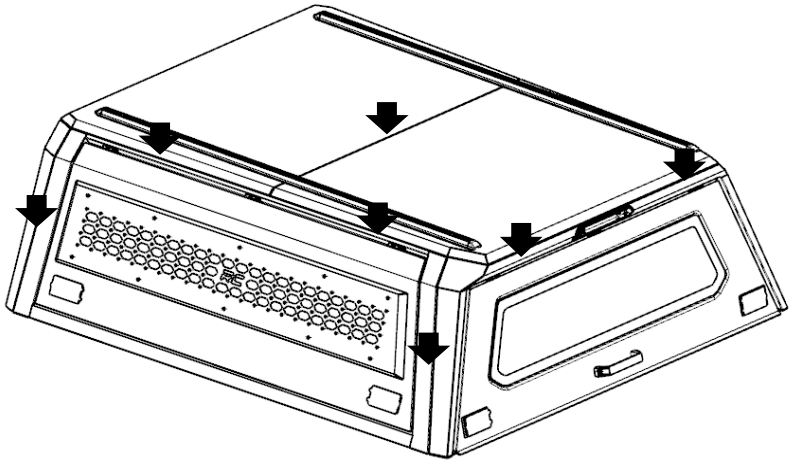

Align all panels

Tighten the (16) bolts of the bed cap then proceed to the top panel hardware.

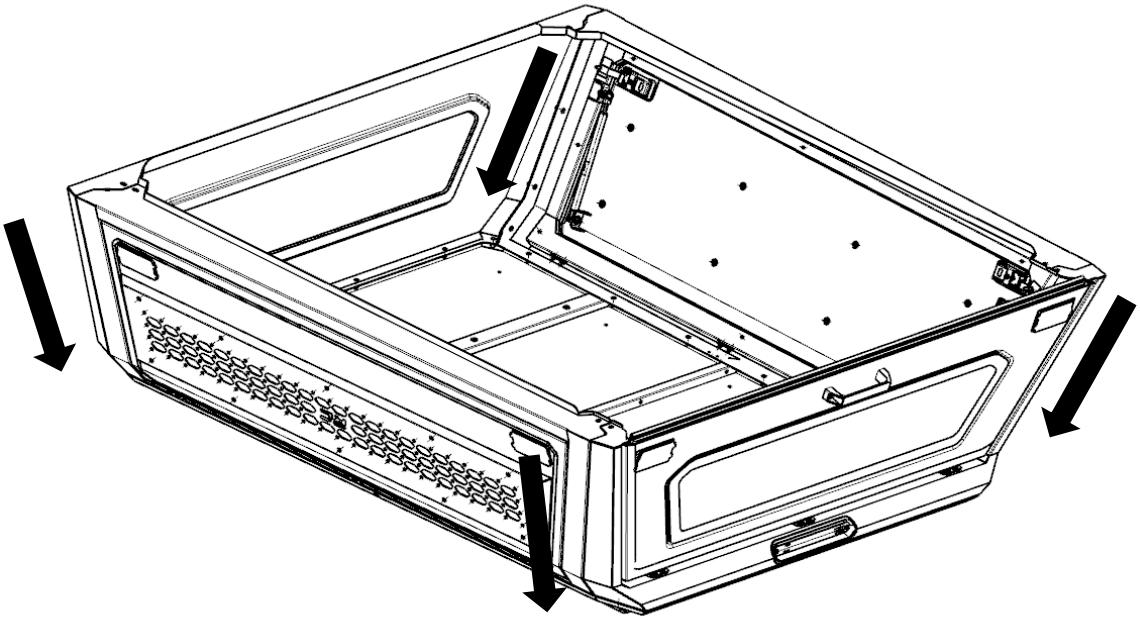

Tighten (24) bolts of top panel as shown below.

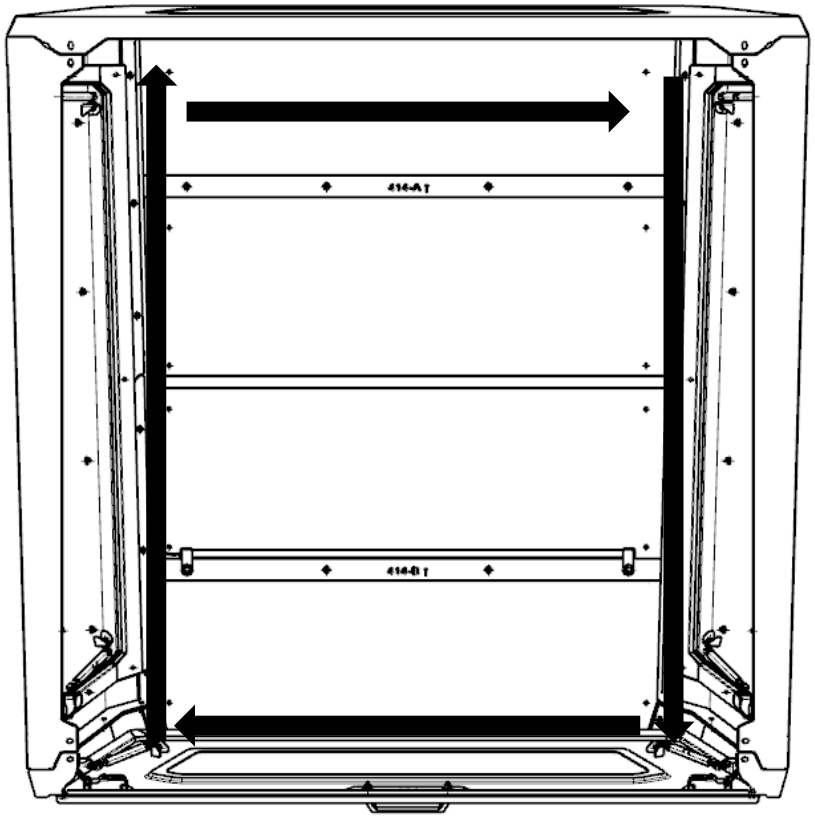

STEP 8

Wipe and clean the bottom of the bed cap. Apply adhesive promoter evenly around the area where the Sealing strip needs to be applied, Apply the Sealing Strip to the bottom paying attention to the location and orientation of the stip. See below.

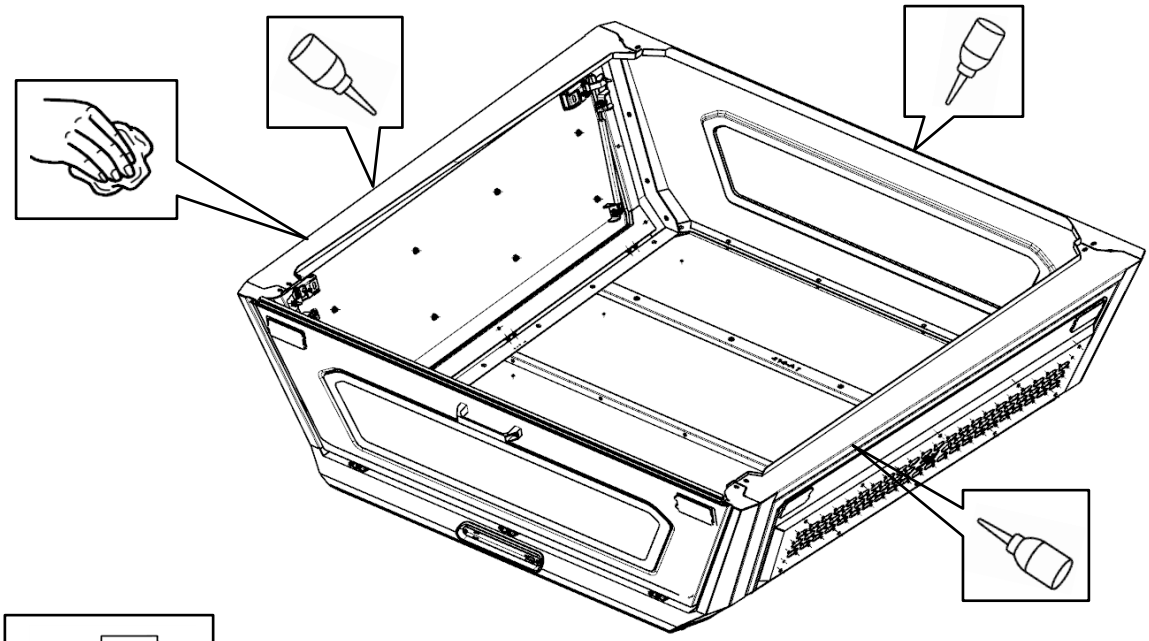

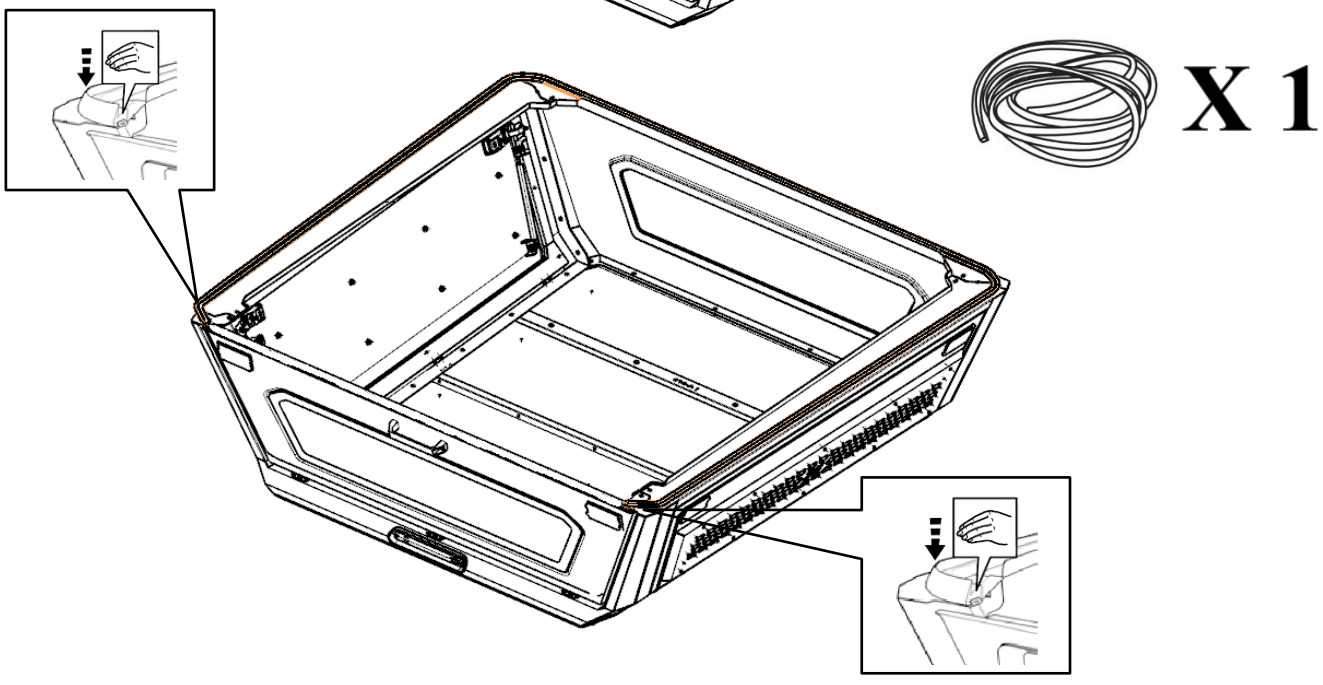

X 1

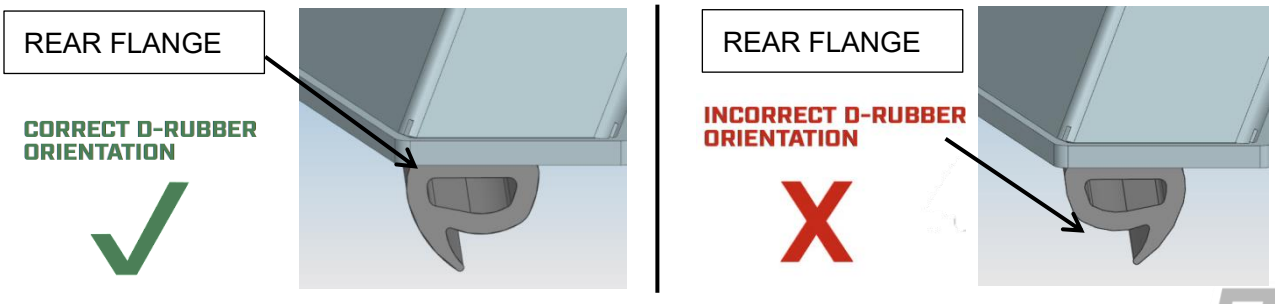

STEP 9

Place the short pads along the inside of the sealing strip previously installed at the indicated locations. This is performed to give the bed cap a firm location to rest and protect the bed of the vehicle.

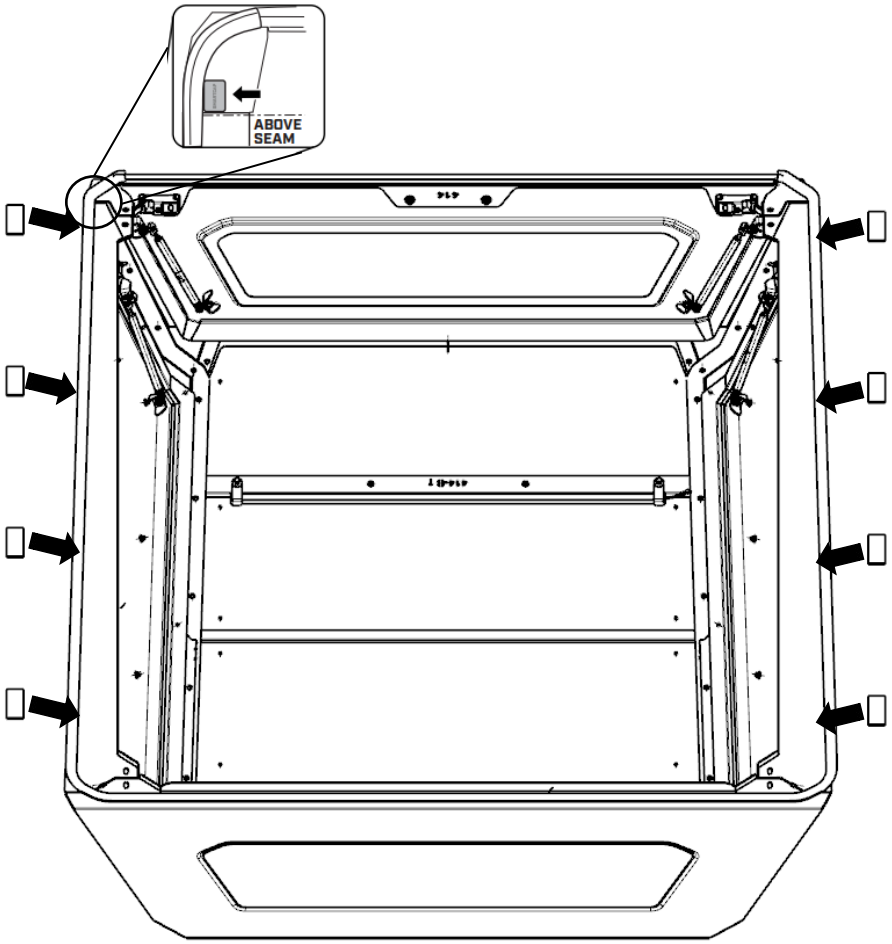

STEP 10

Apply the Foam Seal Tape to the top of the bulkhead on the truck bed and trim any excess if needed.

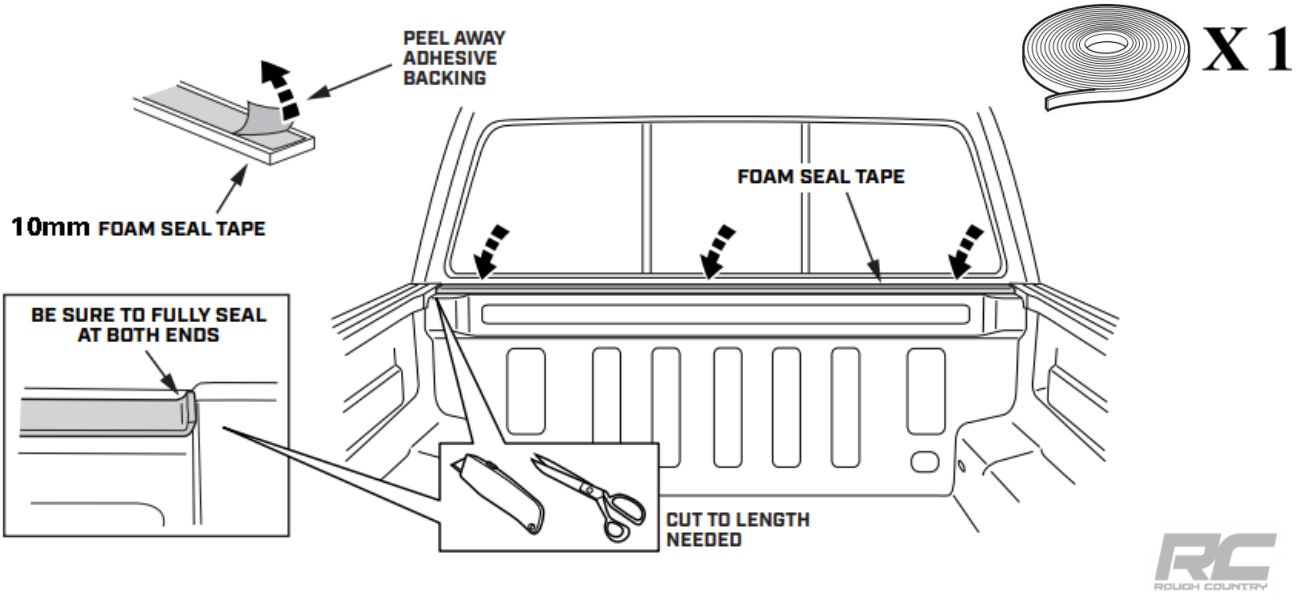

- **Mounting brackets and hardware**

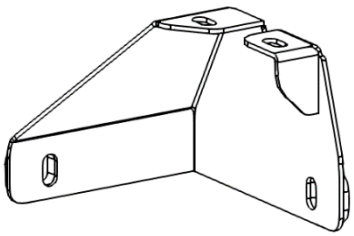

DS Front Bracket

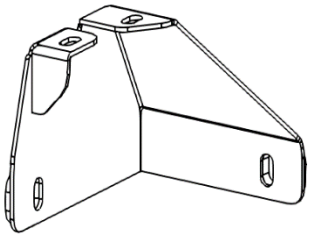

PASS Front Bracket

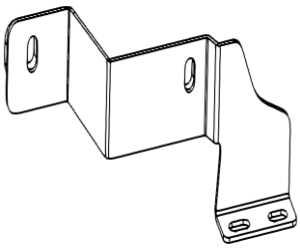

DS Rear Bracket

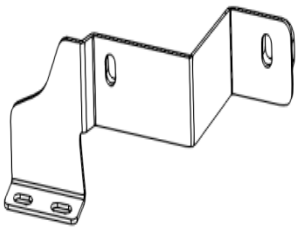

PASS Rear Bracket

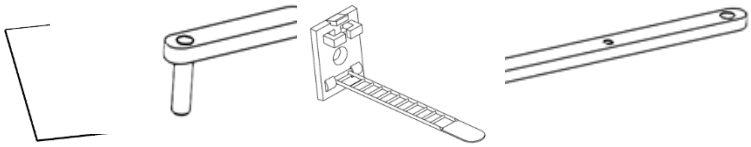

X4

8mm Plastic Blocks X8

Zip Ties x20

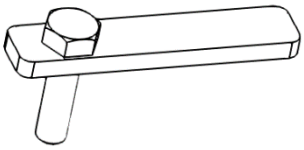

8mm Bolt Plates X2

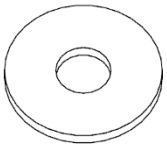

8mm Flat Washers X24

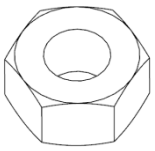

8mm Hex Nuts X8

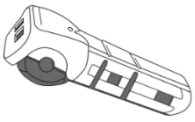

T-shaped wire clip x2

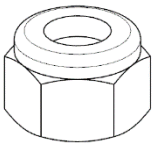

8mm Nylon Lock Nuts X8

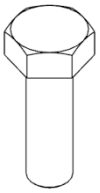

8mmx25mm Hex Bolts X8

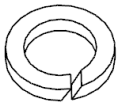

8mm Lock Washers X8



Flash Module X1

- **Tools**



Rachet



13mm



13mm



S4

Step 11

Align the 8mm Bolt Plate with the body hole, insert the bolt head into the body hole, leaving the threaded part outside the body, and then fix the bolt with a 8mm plastic block to prevent it from falling into the body. Repeat the above steps for the 8mmx30mm Long Bolt.

Align the front vehicle bracket (left) with the previously installed threads., as shown in the figure below.

Use the 8 mm washers, spring washers, and nuts to attach the bracket in the corresponding position.

(Repeat this operation with the front bracket (right) on the other side of the vehicle).

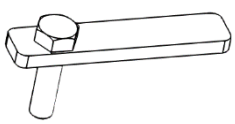

8mm Bolt Plates X2

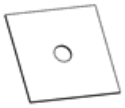

8mm Plastic Blocks X4



8mm Hex Nuts X4

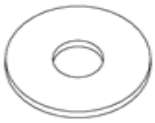

8mm Flat Washers X4



8mm Lock Washers X4



8mmx30mm long Bolt Plates X2

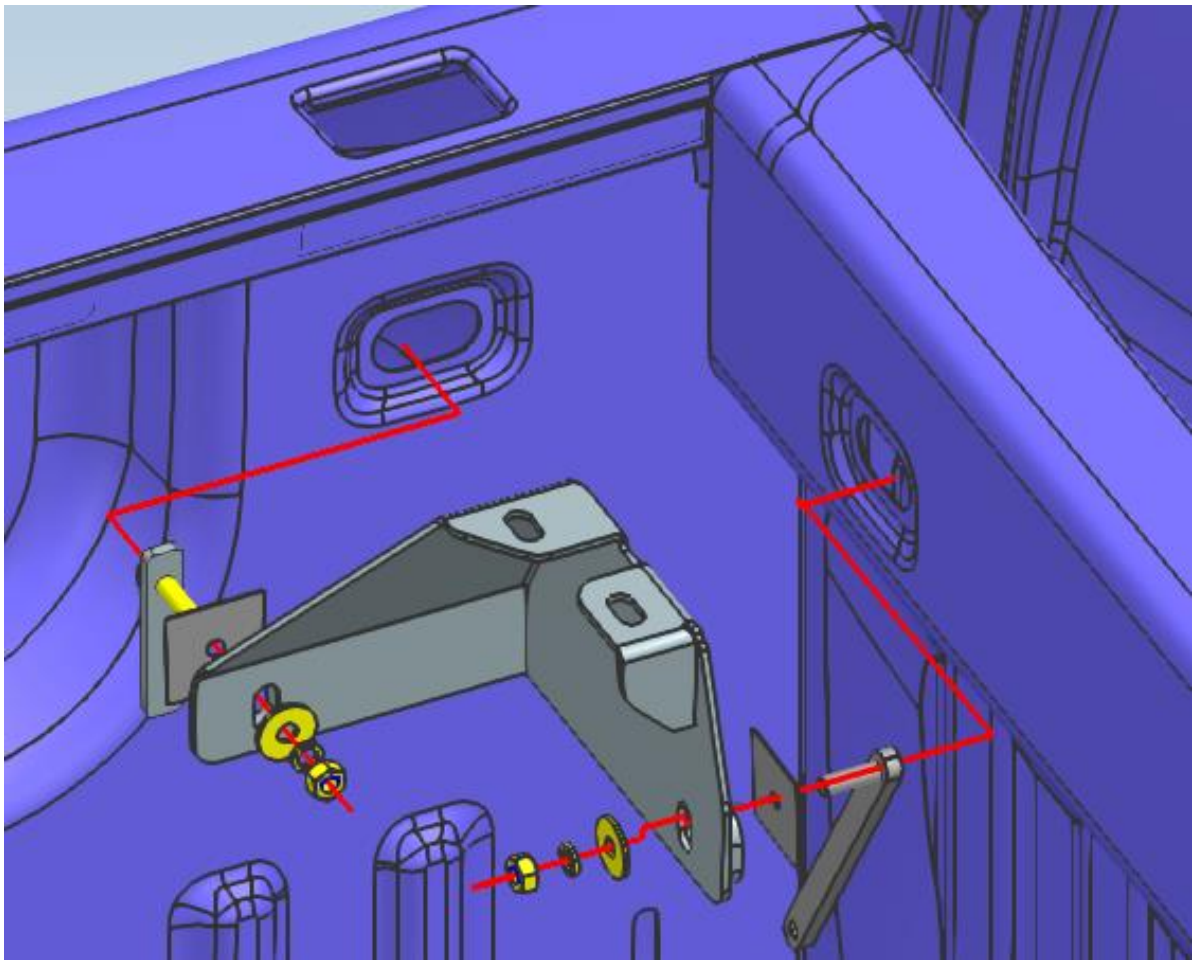

Step 12

Align the 8mmx30mm Long Bolt Plate with the body hole, insert the bolt head into the body hole, leaving the threaded part outside the body, and then fix the bolt with a 8mm plastic block to prevent it from falling into the body. Repeat the above steps for the 8mmx30mm Short Bolt.

Align the rear vehicle bracket (left) with the body hole position, as shown in the figure below. Use the 8 mm washers, spring washers, bolts, and nut plates to attach the bracket in the corresponding position. (Repeat this operation with the rear bracket (right) on the other side of the vehicle). However, the hole indicated by the yellow arrow in the figure below does not exist on the other side of the body, and a same mounting hole needs to be drilled.

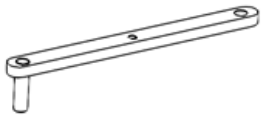

8mmx30mm Long Bolt Plate X2

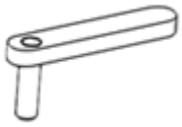

8mmx30mm Short Bolt Plates X2



8mm Hex Nuts X2



8mm Flat Washers X4



8mm Lock Washers X4



8mm Plastic Blocks X4

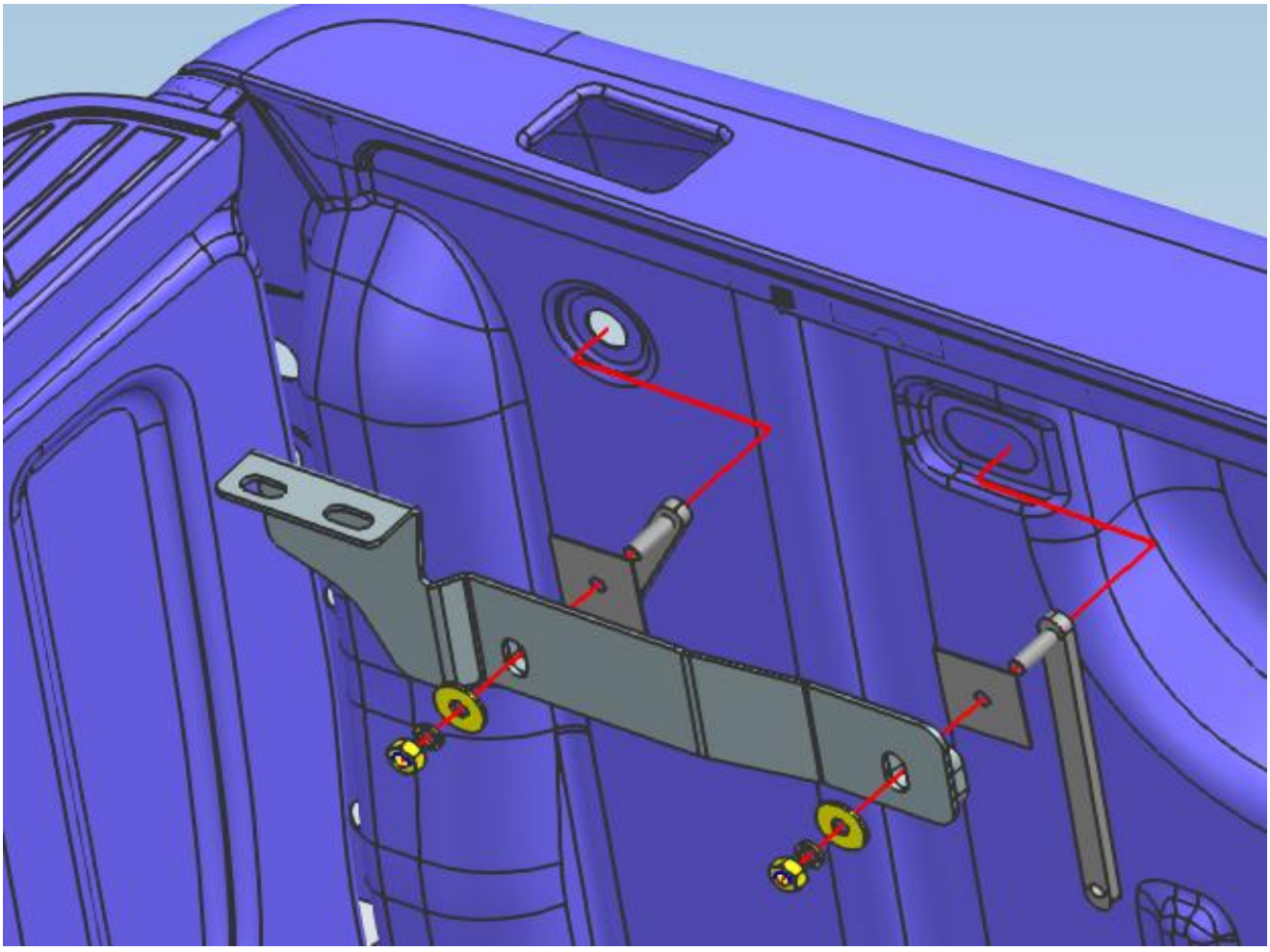

STEP 13

It is recommended to use four people to lift the assembled bed cap onto the bed of the vehicle. To avoid damaging the bottom sealing strip, do not slide the bed cap lid into position.



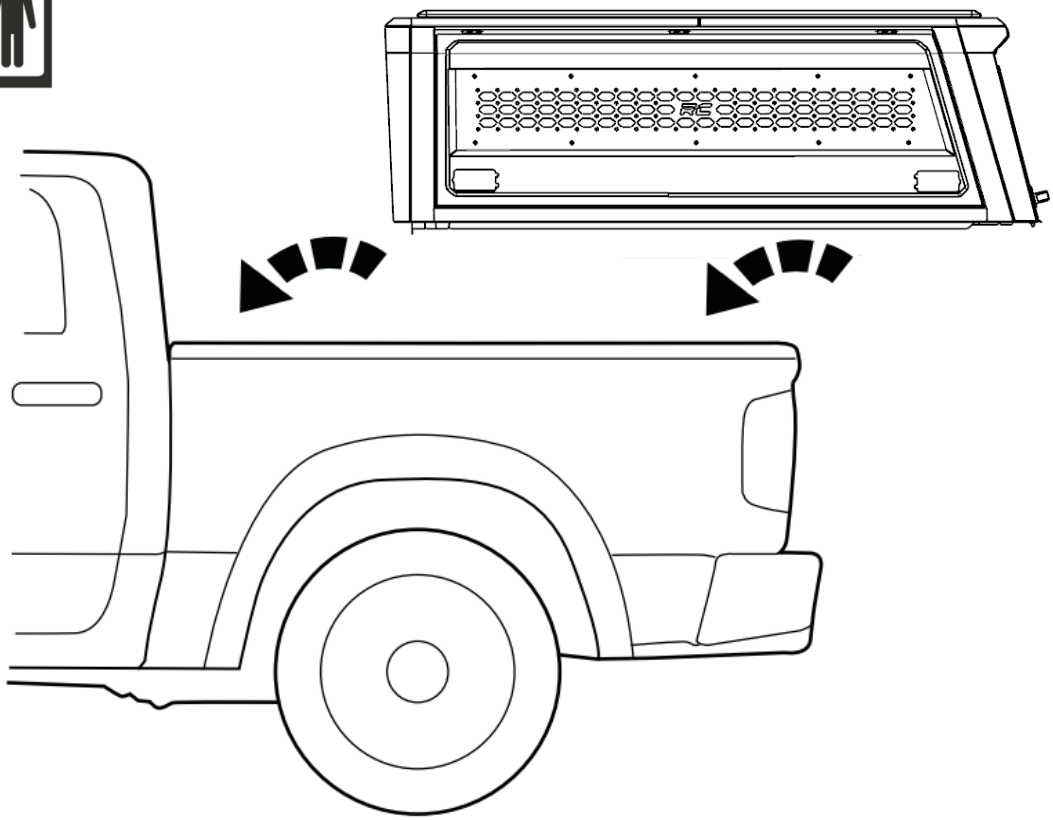

STEP 14

Check the position of the bed cap with the vehicle and center if needed. Do NOT slide the bed cap as that could cause damage to the lower seal. Please note that there should be a gap of 20mm or more between the bed cap and the cab. Do NOT push the bed cap too close to the cab.

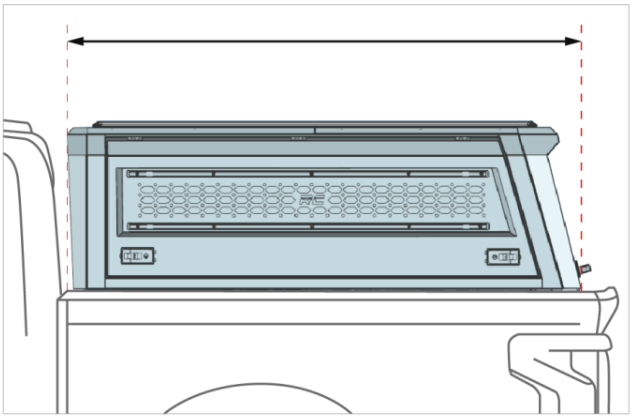

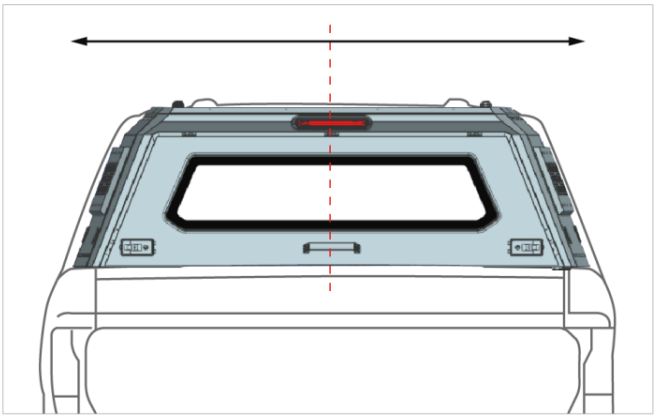

STEP 15

Walk around the bed cap and bed to ensure that the bottom seal strip is installed correctly and the strip is properly inserted under the bed cap.

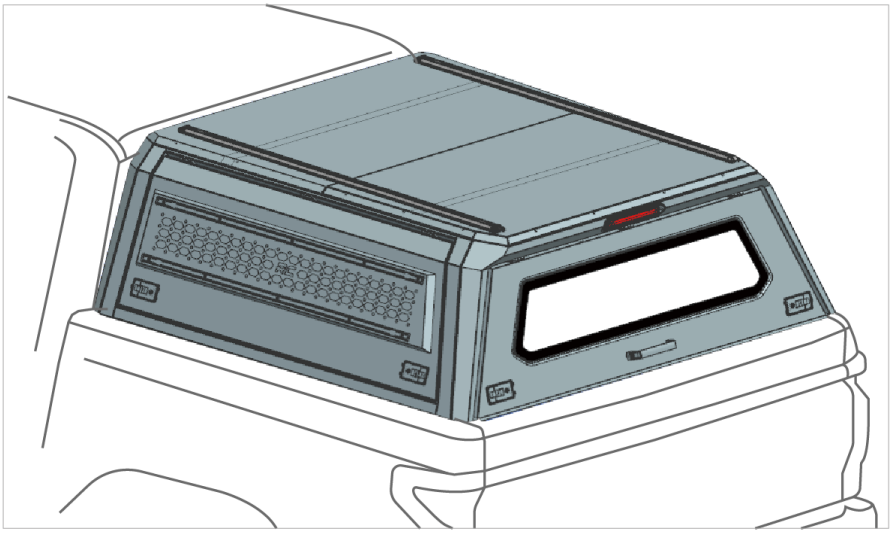

Step 16

Adjust the position of the bed cap and secure the front bracket to the DR side door and the front frame with 8mm fasteners as shown below. (Repeat on the passenger side of the vehicle)



8mmx25mm Hex Bolts X4

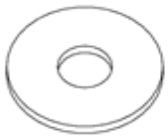

8mm Flat Washers X8



8mm Nylon Lock Nuts X4

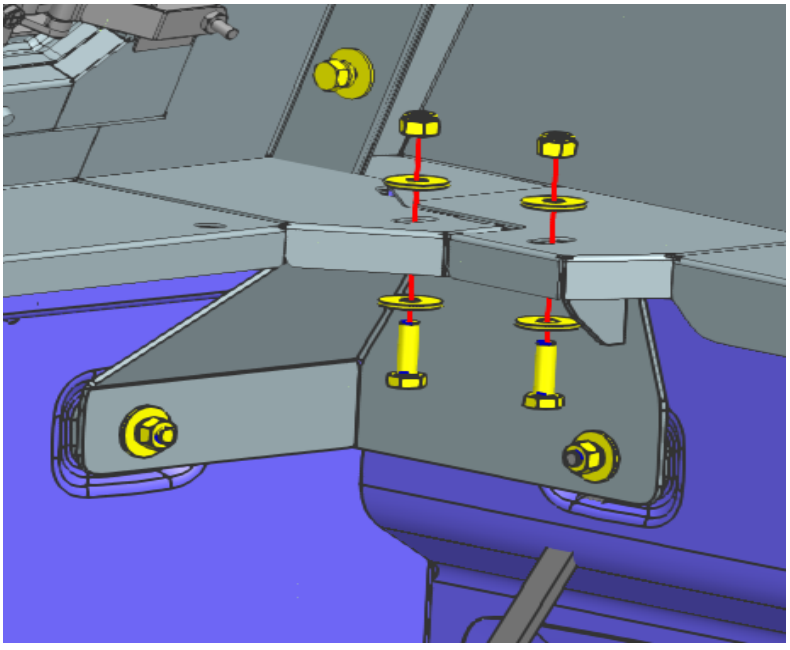

Step 17

Adjust the position of the bed cap and secure the rear bracket to the DR side door and rear door assembly with 8mm fasteners as shown below. (Repeat on the passenger side of the vehicle)



8mmx25mm Hex Bolts X4

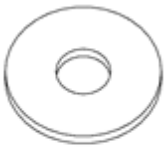

8mm Flat Washers X8



8mm Nylon Lock Nuts X4

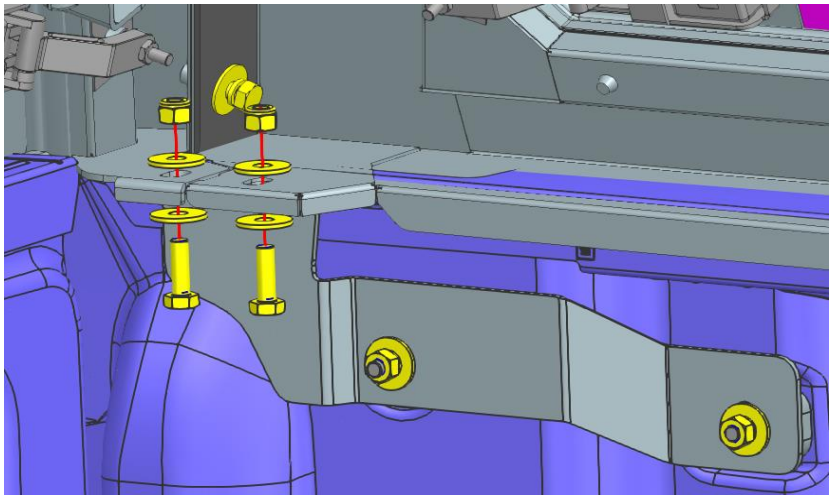

STEP 18

Peel off the backing on the adhesive back of the switch and position the switch onto the bed cap panel. Using zip ties, secure the wire onto the bed cap.

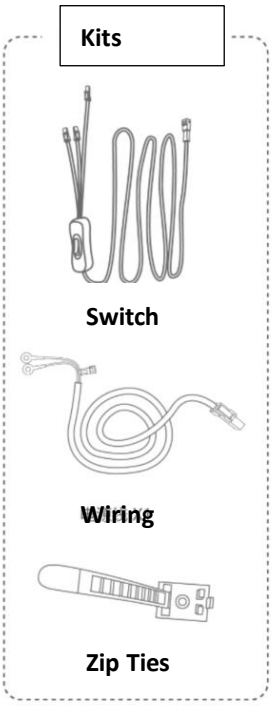

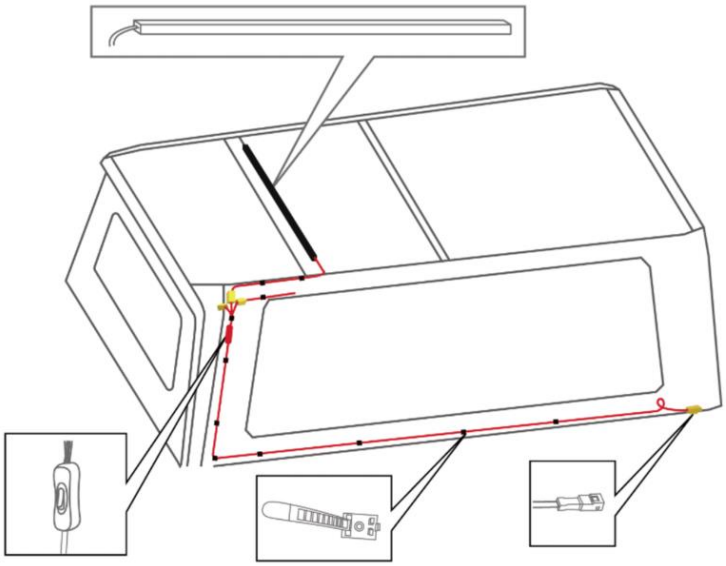

STEP 19

There are three plugs connected together on the switch. Connect the plug with the House label on the wire to the plug of the light strip. The other two plugs are for the optional side shelf unit and side storage unit with molle panel.

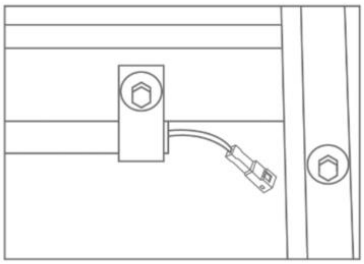

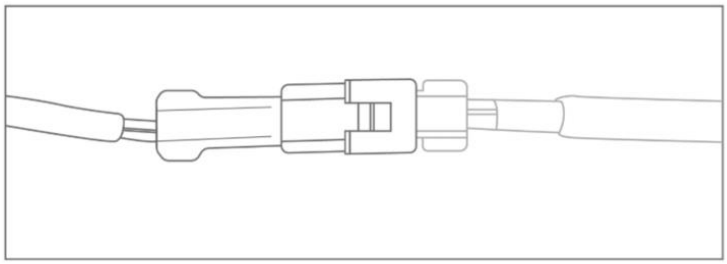

STEP 20

Connect the plug on the wiring to the separate plug on the switch, then route the wiring from the rear of the vehicle along the bottom of the vehicle taking care to route away from excessive heat and moving components. Route to the battery position or other 12-volt source on the vehicle. Connect the positive and negative of the wiring to the positive and negative terminals of the battery or 12-volt source. (See Next Page)

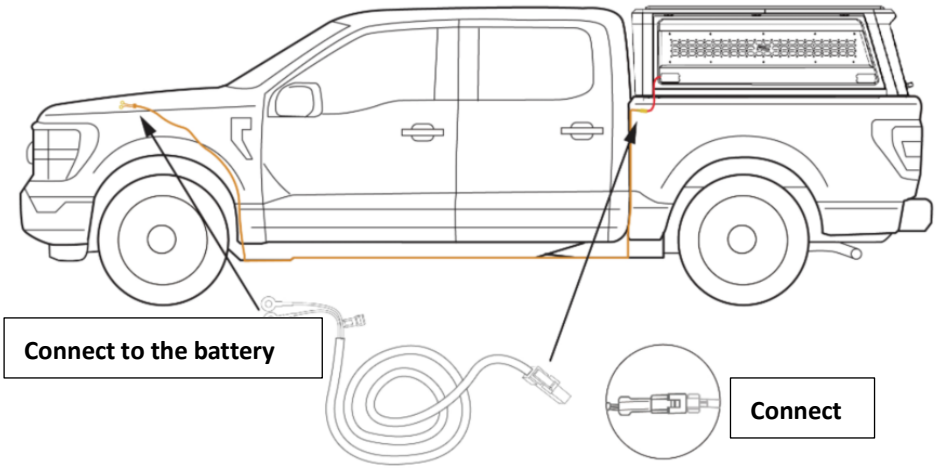

STEP 21

Remove the tail light by removing the two bolts on the inside bed with T-15 bit. Gently pull the tail light from the mount. Pull the two wires of the brake light along the edge of the bed cap and route into the driver side tail light mounting area through the bed. Locate the brake light wire and using a T-shaped wire clip, secure the wire to the stock brake light wire. Using zip ties, secure the wire onto the bed cap. Reinstall the tail light.

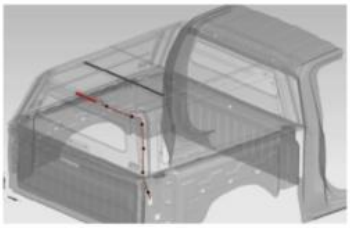

Place the OE brake light harness into the clip.



Securely press the clip closed.

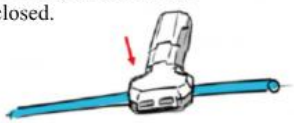

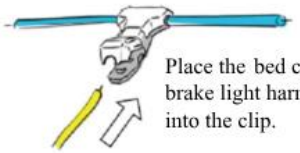

Place the bed cap brake light harness into the clip.

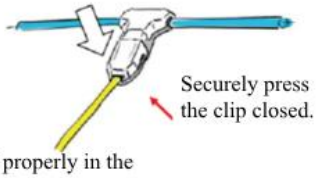

Securely press the clip closed.

NOTE: Make sure the wire is seated properly in the clamp jaws before clamping. The wire must be centered in the "teeth" of the jaws for a proper connection.

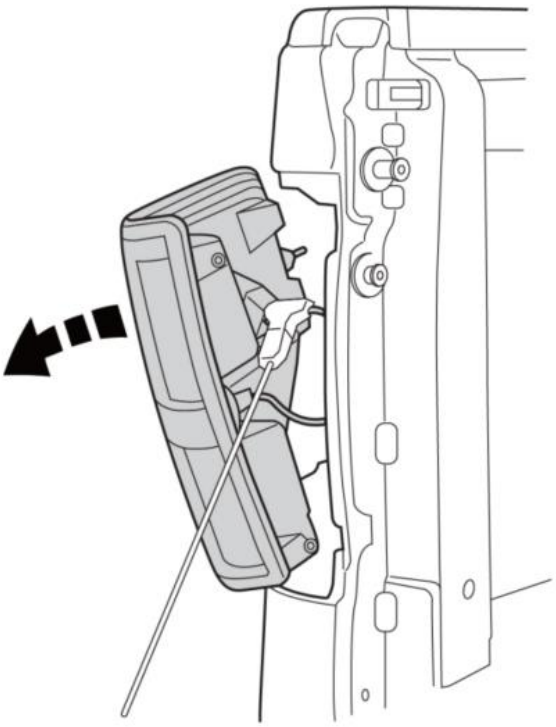

By purchasing any item sold by Rough Country, LLC, the buyer expressly warrants that he/she is in compliance with all applicable, State, and Local laws and regulations regarding the purchase, ownership, and use of the item. It shall be the buyer's responsibility to comply with all Federal, State and Local laws governing the sales of any items listed, illustrated or sold. The buyer expressly agrees to indemnify and hold harmless Rough Country, LLC for all claims resulting directly or indirectly from the purchase, ownership, or use of the items.