INSTALLATION INSTRUCTIONS

ROUGH COUNTRY

53514550

2007-2021 Toyota Tundra 2WD/4WD 5'7" Bed
Manual Retractable Bed Cover

Thank you for choosing Rough Country for all your vehicle needs.

Please read instructions before beginning installation. Check the kit hardware against the kit contents shown below. Be sure you have all needed parts and know where they go. If question exist, please call us @1-800-222-7023. We will be happy to answer any questions concerning this product. Check all fasteners for proper torque. Check to ensure for adequate clearance between all components. Periodically check all hardware for tightness..

Estimated Install time: 60 minutes

BEFORE YOU START:

- Read instructions carefully before beginning installation.
- Check that all parts/hardware are present and correct as depicted below.

GENERAL NOTES:

- Keep all boxes and packaging until the installation is complete. Unpack all components carefully to prevent damage.
- Ensure any bare metal surfaces are protected by automotive primer and touch up paint. Remove any dust/debris from vehicle mounting surfaces prior to installation.
- This tonneau cover is compatible with spray-on bed liners, however any composite drop-in bed liners must be removed prior to tonneau cover installation.
- This product must be installed as outlined in these instructions. Failure to do so may result in damage to the vehicle or the product.
- Do not modify the structure of the Bed Cover in any way.

PARTS LIST:

1

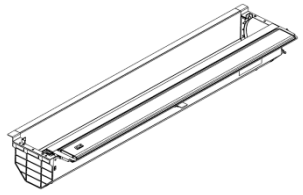

Tonneau Cover Canister Assembly x 1

2

Canister Cover Plate x 1

3

DS Side Rail x 1

4

PS Side Rail x 1

5

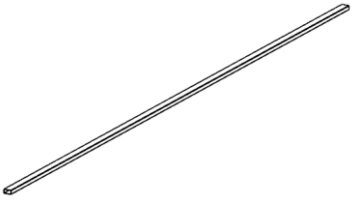

Calibration Crossbar x 1

HARDWARE LIST:

6

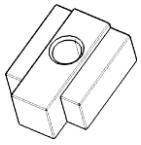

6mm T-channel Nut Blocks x 6

7

6mm x 16mm Combo Torx Bolts x 12

8

6mm x 20mm Combo Torx Bolts x 8

9

T30 Torx Wrench x 1

10

T40 Torx Wrench x 1

11

5mm x 10mm Countersunk Screw x 6

12

Plastic Caps x 6

13

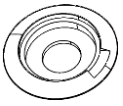

Plastic Ring x 6

14

Bed Rail Top Foam Spacers x 3

15

Bed Front Gap Foam Spacer x 1

16

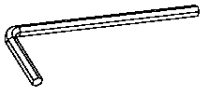

S3 Allen Wrench x 1

17

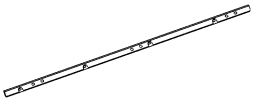

Driver/Left Replacement Track x 1

18

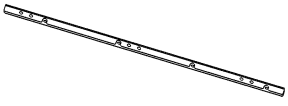

Passenger/Right Replacement Track x 1

19

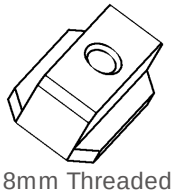

8mm Threaded Mount Block x 12

20

Adhesion Promoter x 1

21

Hole Saw (Ø19mm) x 1

22

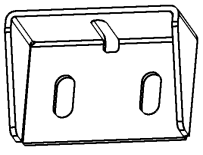

Mount Bracket x 6

23

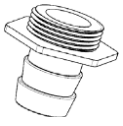

Front Drain Tube Adapters x 2

24

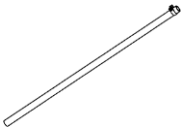

Rear Drain Tubes x 2
Rear Tube Clamps x 2

25

Front Drain Tubes x 2

HARDWARE LIST:

26

Front Tube Clamps x2

27

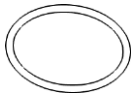

Rubber Rings x 2

28

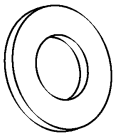

8mm x 24mm x 2mm Flat Washer x 12

29

8-1.25mm x 25mm Torx Bolt x 12

30

8mm Lock Washer x 12

TOOLS REQUIRED:

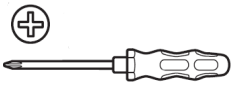

Phillips Screwdriver

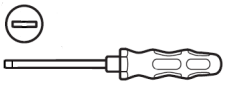

Flat Screwdriver

Drill Bit 16mm (5/8”)

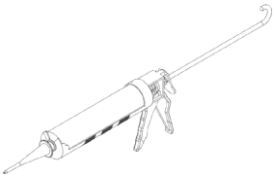

Caulking Gun

Drill

Scissors

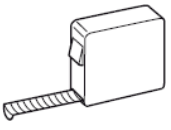

Tape measure

STEP 1

REMOVE FROM PACKAGING AND REVIEW CONTENTS

Carefully remove all contents from outer package, open all boxes contained within and confirm that all components are present and undamaged.

Keep the black rubber sleeve in fig-1 fitted while installing to prevent slat damage; take it off post-installation to ensure normal lock function

Fig 1

STEP 2

PREP TRUCK BED FOR INSTALLATION

Remove the front bed utility track, there are four (4) T30 torx bolts along with one (1) plastic tab at the center. Once all of the bolts are removed, slide the track toward the driver side to disengage the plastic tab then remove the track

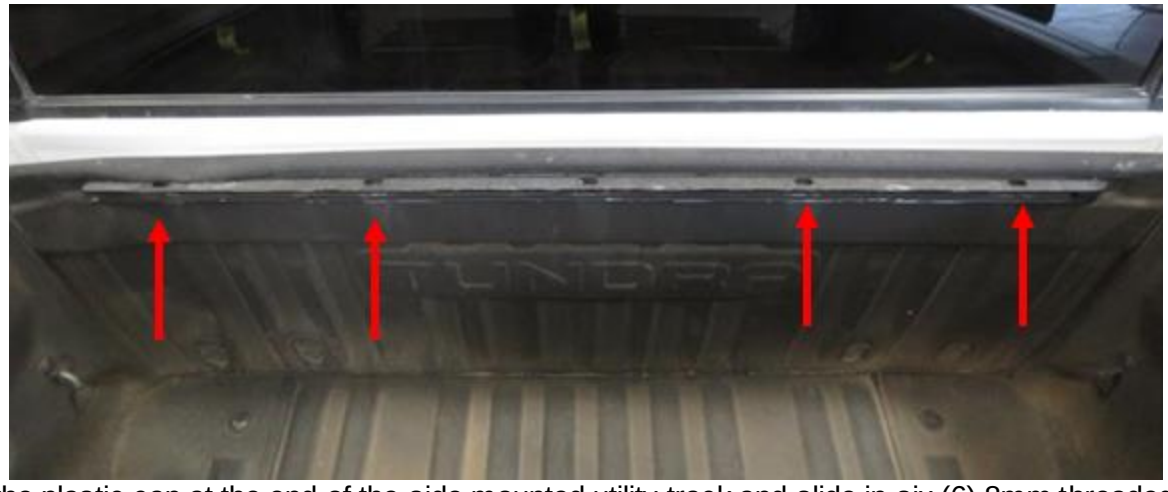

Remove the plastic cap at the end of the side mounted utility track and slide in six (6) 8mm threaded mount blocks

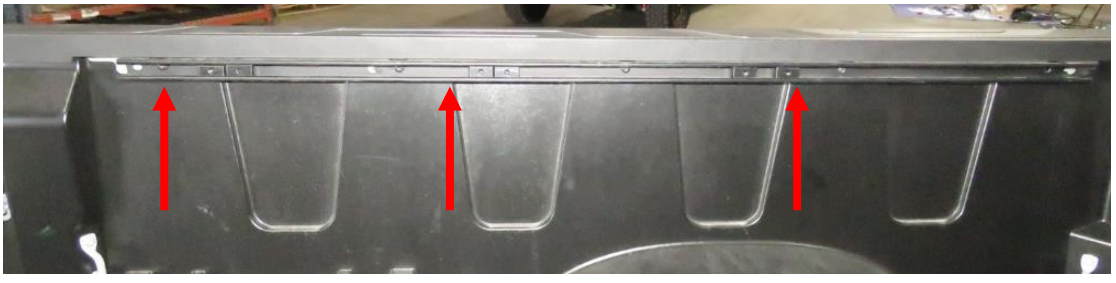

If the vehicle is not equipped with the side mounted utility tracks, install the included replacement tracks with four (4) 6-1.00mm x 20mm torx bolts using the threaded inserts in the side of the bed. The front-most bed insert will not be used.

***Note:** If the truck bed has a spray-on bed liner, it may be necessary to carefully cut the bed liner material around the mount points to expose the inserts in the bed

Drilling is required to install the front drain tubes, rear drain tubes, and tonneau cover power harness.

Use caution when drilling through the front of the bed to not hit the cab, a drill stop may be used to help prevent this

Front Drain Tubes: Measure approximately 9 1/4" (236mm) from the side of the bed, and 3" (75mm) up from the base of the bed. This will be done on both sides of the bed. Use the included 19mm hole saw to cut the drain tube holes. The holes will be drilled into the raised vertical ribs at the front of the bed

Rear Drain Tubes:
The holes for the rear drain tubes can be drilled in the raised section near the rear of the bed at the location indicated below. Use the included 19mm hole saw to drill one hole on each side of the bed.

Clean the top of the plastic bed caps and top of front bed bulkhead of dirt/debris

Install the front bulkhead seal (hard foam seal) across the top of the front bulkhead

15

nstall the water-resistant seals (soft foam seals) across the top of the front bulkhead (on top of the bulkhead seal) and the plastic bed caps. The seal applied to the front bulkhead will span the whole width of the truck bed, the seals applied to the plastic bed caps should be positioned as close to the inner edge of the bed as possible. Trim off any excess. A small amount of sealant may be used at the corners of the front bulkhead to improve water resistance

14

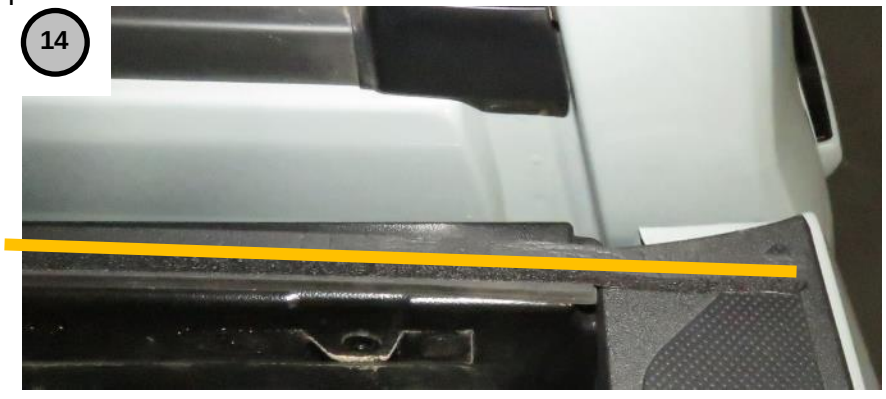

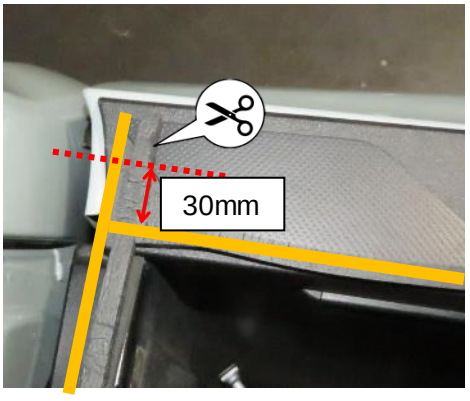

STEP 3

INSTALL SIDE RAILS

Remove the protective plastic wrapping from the side rails and identify the driver and passenger side rails.

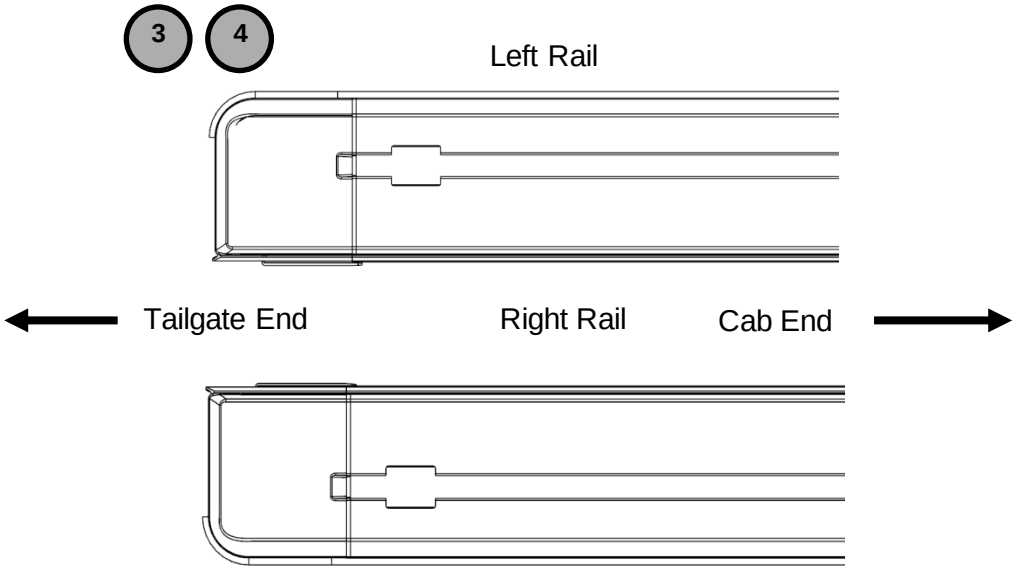

Carefully pull the tonneau cover out from the canister and ensure that the stopper on the tonneau cover is in front of the limit block on the canister.

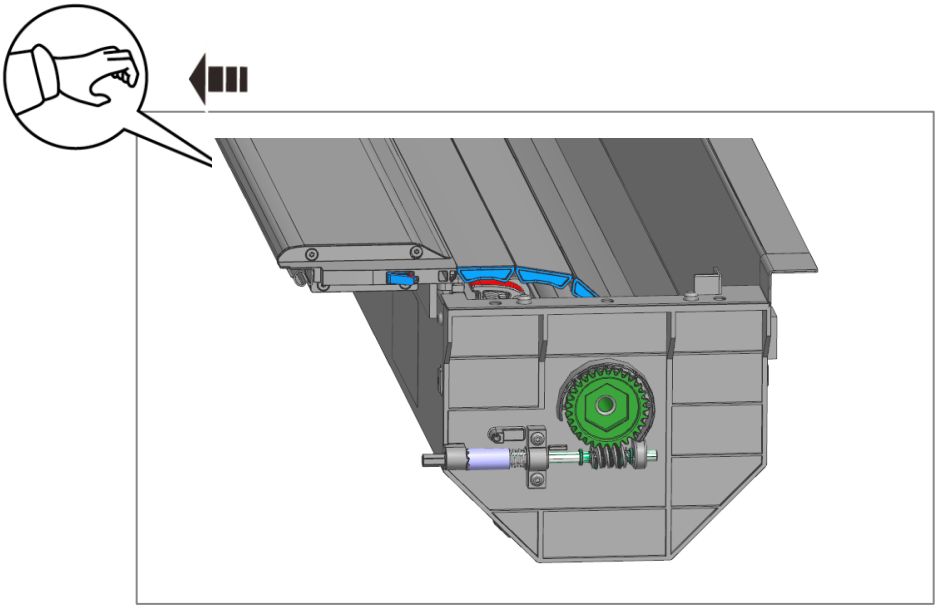

Line up the side rail with the canister and carefully slide it inward, ensuring that the ends of the tonneau cover slats are properly inserted into the side rail channel. It may be necessary to lift up part of the side rail sweep seal so that it stays on top of the tonneau cover slats and does not get tucked in.

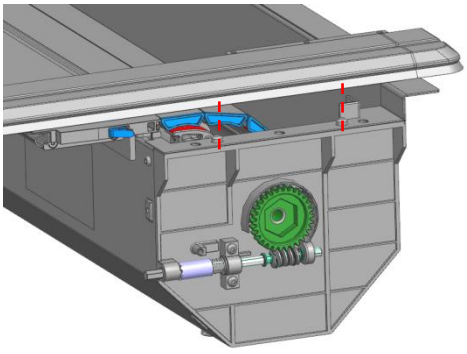
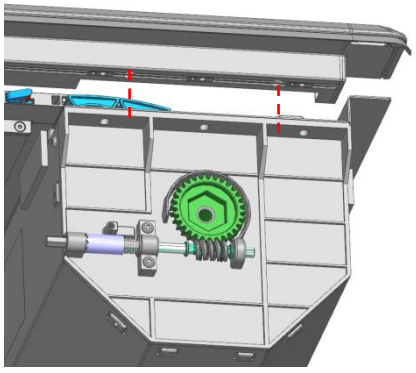
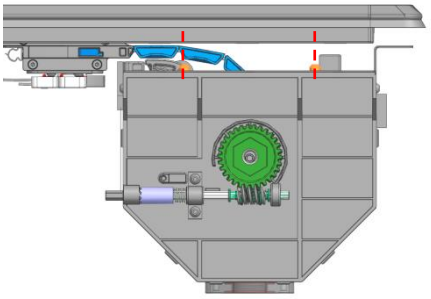

Check that the side rail is sitting flush on top of the canister, then use (3) 6-1.00mm x 16mm T30 Combo Allen bolts to install the side rail onto the canister.

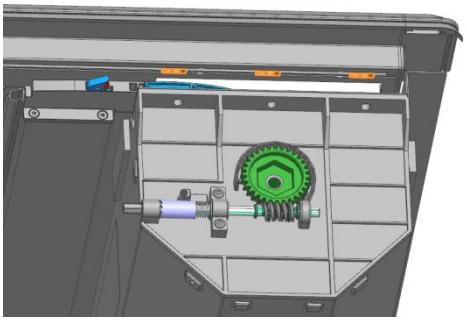
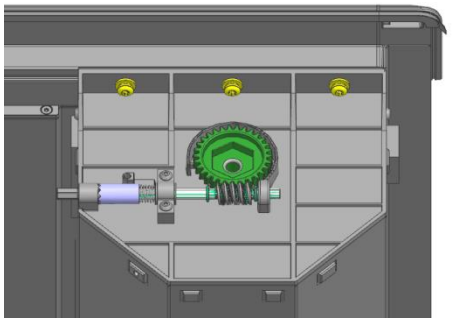
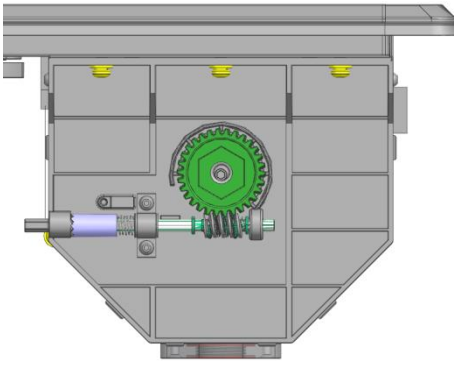

Repeat this process to install the other side rail

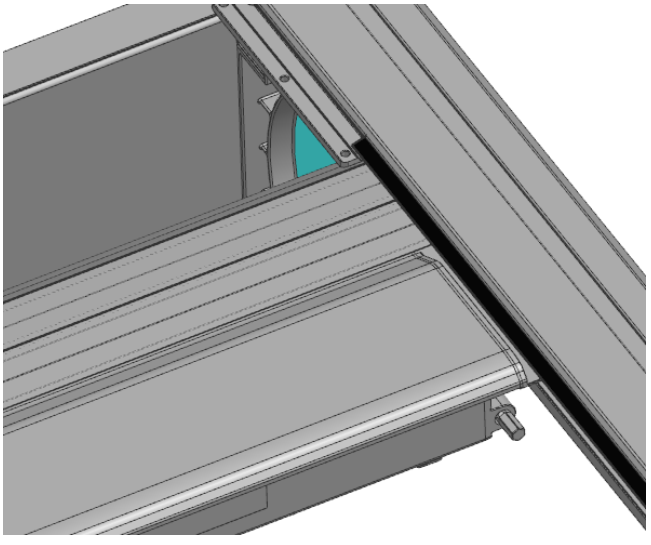
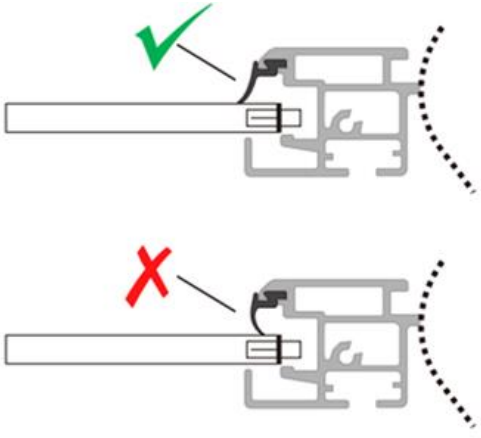

CHECK SEAL IS IN POSITION AND NOT DAMAGED

STEP 4

INSTALL CANISTER COVER PLATE

Place the canister cover plate on top of the canister and make sure the mount holes line up with the mount points on the canister. Place one (1) plastic ring into each hole on the canister cover plate, then use six (6) 5mm x 10mm flat head screws to attach the canister cover plate to the canister. Remove the covering over the adhesive strips on the ends of the weather seal and press onto the bottom of the side rails, ensuring that the groove on the weather seal is inserted into the slot on the side rail. A small amount of sealant may be used to connect the joints of the rubber trims for improved water resistance

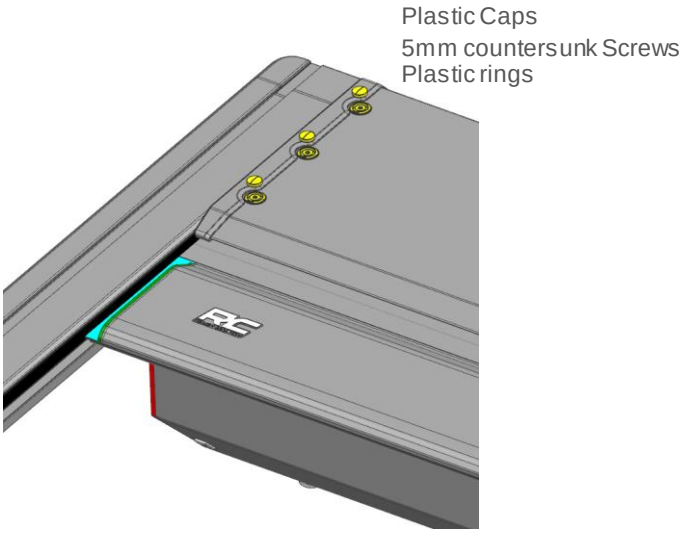

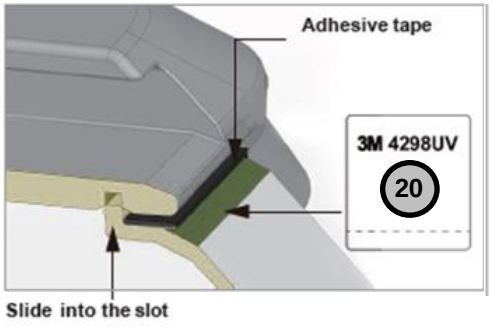

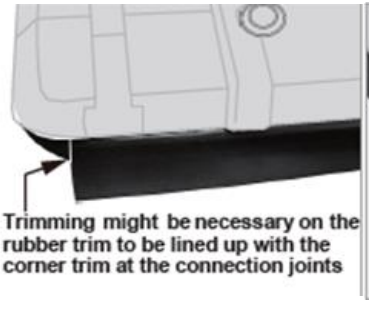

STEP 5

INSTALL TONNEAU COVER ON TRUCK BED

With assistance, carefully lift the tonneau cover assembly and place it on top of the truck bed. Do not slide the tonneau cover along the bed surface as this will damage the foam seals. While lifting the cover, position it as far forward as possible.

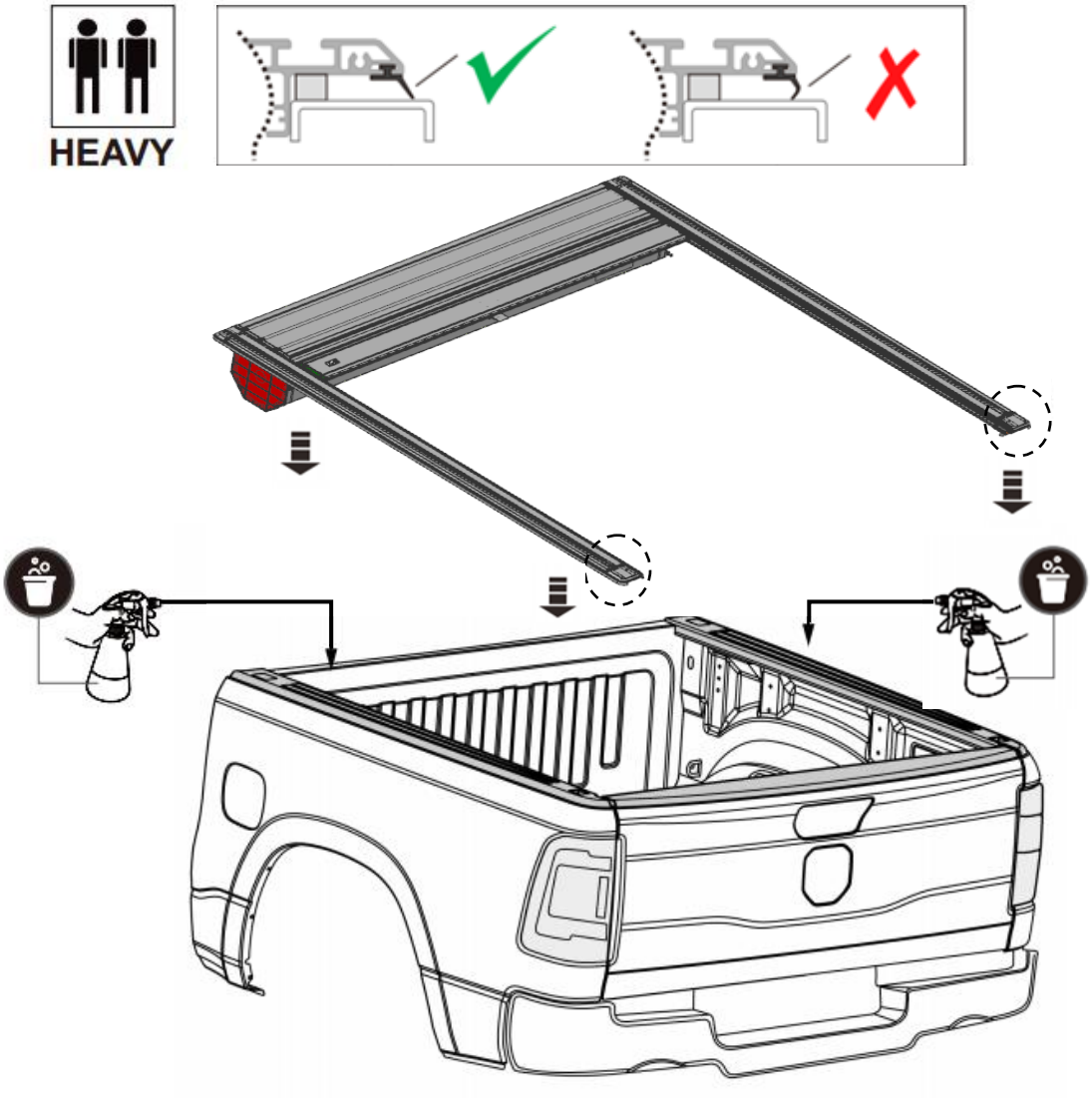

STEP 6

INSTALL MOUNT BRACKETS

Factory Utility Tracks:

Start on the driver side. Insert three (3) 6mm t-channel blocks into the channel on the bottom of the driver side rail and align them with the mount points on the replacement tracks. Use three (3) mount brackets and attach the tonneau cover to the truck bed. Use one (1) 6-1.00mm x 16mm T30 torx bolt to attach the mount bracket to the side rail and use two (2) 8-1.25mm x 25mm T40 torx bolts, two (2) 8mm x 24mm x 2mm flat washers, two (2) 8mm lock washers, and two (2) 8mm threaded mount blocks to attach the mount bracket to the bed side. Leave all mount bracket hardware loose at this time. Repeat this process for the passenger side.

17 18

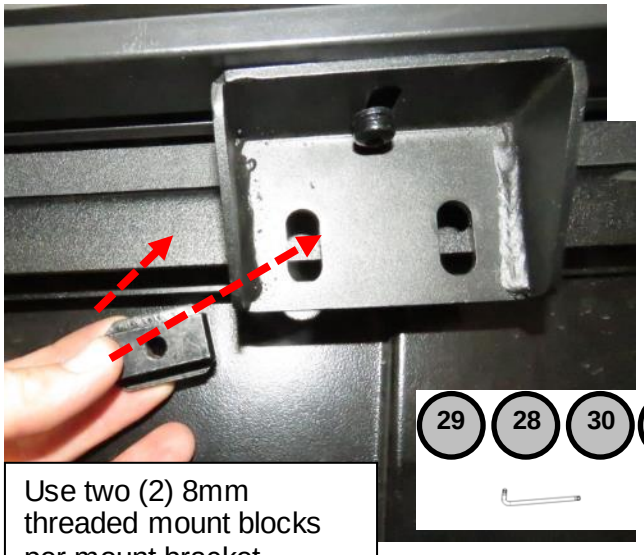

Use two (2) 8mm threaded mount blocks per mount bracket

6 7

(1) 6-1.00mm x 16mm Bolt
(1) 6mm T-Channel Nut Block

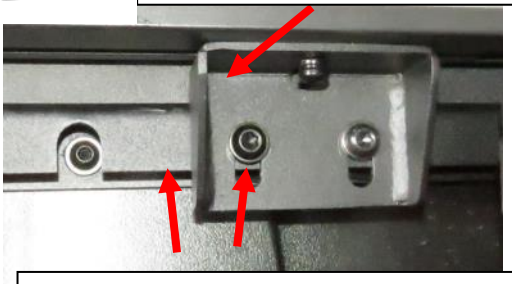

29 28 30 19

(2) 8-1.25mm x 25mm Torx Bolt
(2) 8mm x 24mm x 2mm Flat Washer
(2) 8mm Lock Washer
(2) 8mm Threaded Mount Block

STEP 7

ALIGN THE SIDE RAILS

Insert the included calibration bar into the channel on the inner side of both side rails. Slide the calibration bar along the channels and check that the distance between the side rails is the same front-to-rear. Shift the ends of the side rails until the optimum position is achieved, then carefully push down on the end of the side rails and tighten the hardware for the rear mount brackets. Use the calibration bar to double check the gap between the side rails and measure the distance between the outside of each side rail and the outer edge of the bed to ensure they are positioned centrally. This process may need to be repeated a few times until all measurements are optimal. After this has been completed, proceed to tighten the hardware for the rear and front brackets, carefully pushing down on the side rails above each mount bracket before tightening the hardware.

As a final check to make sure the tonneau cover will operate smoothly, it can be manually moved through its full range of motion. If it moves easily with no binding/rough spots, proceed with the rest of the installation. If it is difficult to operate or has rough spots, the side rails will need further adjustment until the tonneau cover operates smoothly.

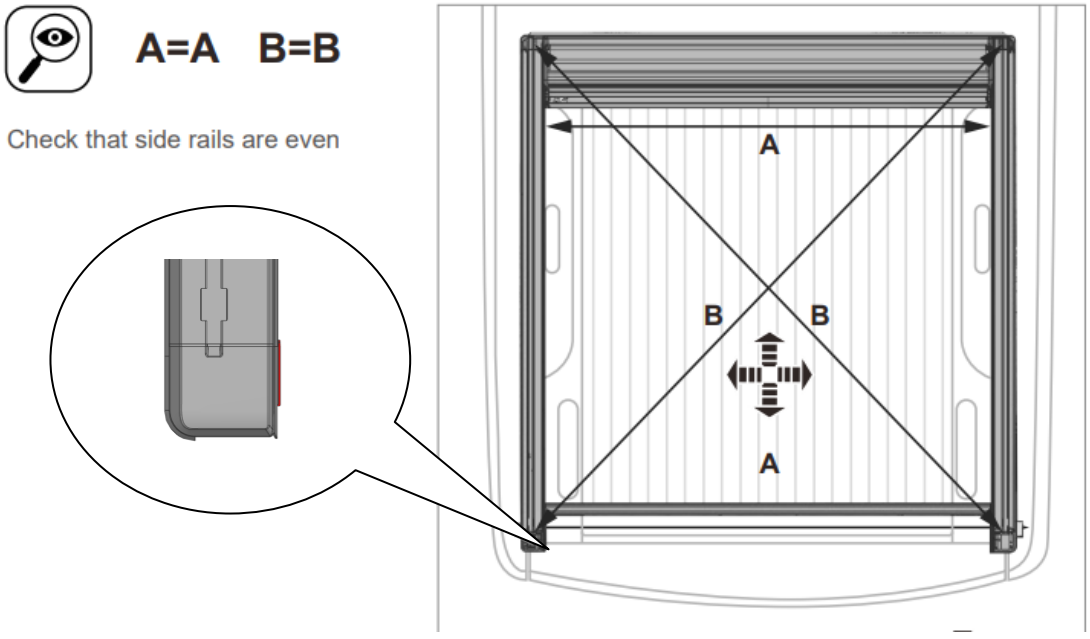

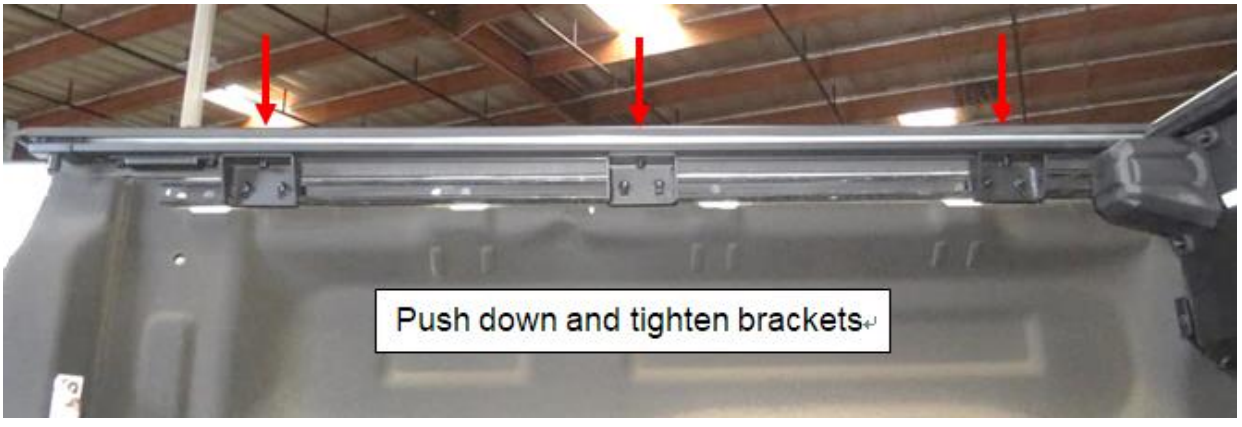

STEP 8

INSTALL DRAIN TUBES

Front: Install the front drain tube adapters onto the front drain tubes and tighten using the supplied tube clamps. Screw the drain tube adapter into the threaded mount hole on the bottom of the canister. **Do not over tighten as this may damage the plastic fittings.** Route the end of the front drain tube through the hole that was cut into the plastic plug at the base of the bed from **Step 2**.

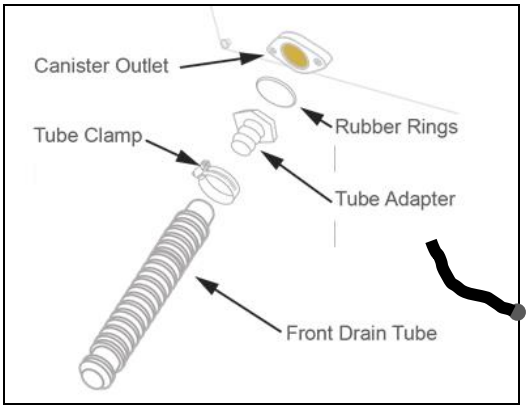

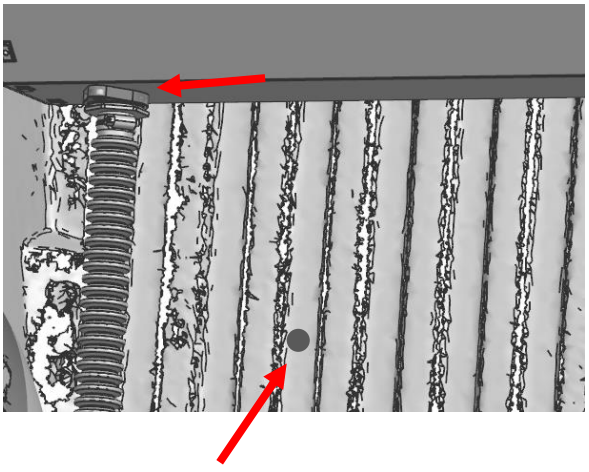

Rear: Slip the end of the rear drain tube with the pre-installed tube clamp onto the drain outlet at the end of the side rail (the tube clamp may need to be loosened to fit over the drain outlet). Route the bottom of the rear drain tube through the hole at the base of the bed, next to the rear bed tie down hoop. Tighten the tube clamp until the drain tube is snug on the drain outlet, **do not over tighten as this may cause damage to the drain outlet.**

FINAL NOTES

- Open and close the tonneau cover to ensure that it is operating without rubbing or binding
- Open and close the tailgate to check for proper movement
- On some models, a better fit with the tailgate may be obtained if the rear of the side rails are adjusted slightly up or down
- Recheck that all mounting hardware is tight.
- Check that the side rails are spaced evenly on the bed, and adjust accordingly

MAINTENANCE AND CARE

- Periodically clean the canister of dirt or debris that may have been collected inside
- Periodically check front and rear drain tubes and clean as needed
- A non-graphite dry lubricant may be sprayed onto the circular track inside the canister to maintain smooth operation of the tonneau cover
- Remove any snow or large debris from on top of the tonneau cover before opening
- Clean with mild soap and water only, do not use strong chemicals or cleaners. Do not wax the tonneau cover
- Periodically check that the tonneau cover is securely attached to the truck bed and that the mount brackets have not come loose. Frequent usage of the tonneau cover or vibrations from driving on rough road may cause the tonneau cover to require adjustment

WARNING AND SAFETY INFORMATION

- Do not use the truck bed as a passenger compartment.
- Do not store or transport volatile materials such as solvents, chemicals, or liquids as fumes may accumulate inside the bed. Do not allow solvents, chemicals, or oils to come into contact with the tonneau cover. If this happens clean the tonneau cover immediately with a mild detergent and water solution.
- Do not stand/sit or rest heavy objects on the tonneau cover.
- Do not fill or store volatile liquid containers such as fuel cans while under the tonneau cover.
- The tonneau cover is designed to be water and dust resistant in the majority of situations, in certain extreme environments a certain level of ingress is to be expected. Items that are of high value and are susceptible to water damage should be packaged accordingly. Condensation on the underside of the tonneau cover should be expected under certain conditions (cool days/nights).
- Do not subject the tonneau cover to excessive open/close forces. Excessive force may damage internal components, replacement of which may not be covered in your warranty
- While the tonneau cover has a built in safety feature to prevent damage and injury, you must keep obstructions clear of cover during opening/closing

USER MANUAL

Unlock and open the Cover

Slightly pull the cover toward the tailgate, at the same time, pull the strap to the left side, or twist the latch handle clockwise, to unlatch the lock under the cover. Release the strap and the cover should start to retract.

Note: As the cover begins to retract, the speed will gradually increase due to the spring. When it is about to fully open, gently pull the strap to slow it down, otherwise, the cover would slam into the canister, causing irreversible damage.

Lock and close the Cover

Pull the strap to the right, or twist the latch handle counterclockwise, to latch the lock under the cover. Pull the cover toward the tailgate until the lock latches into position. There are three positions that can latch the lock, as the image shown below.

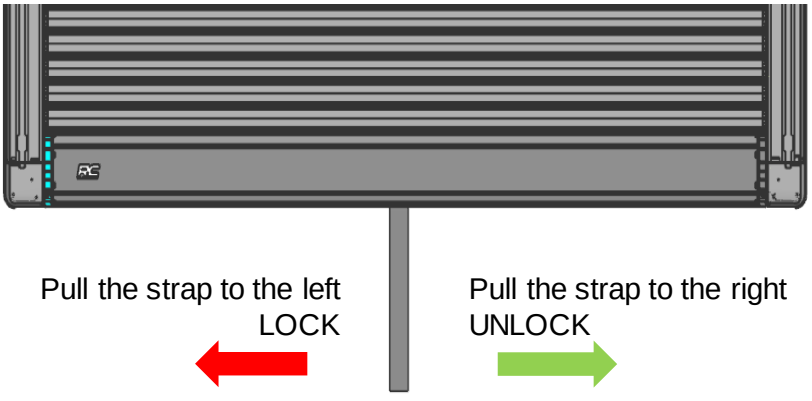

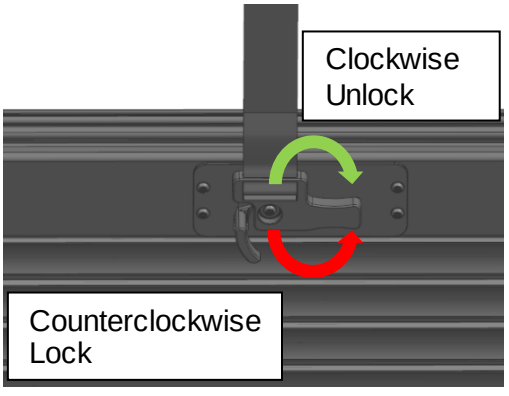

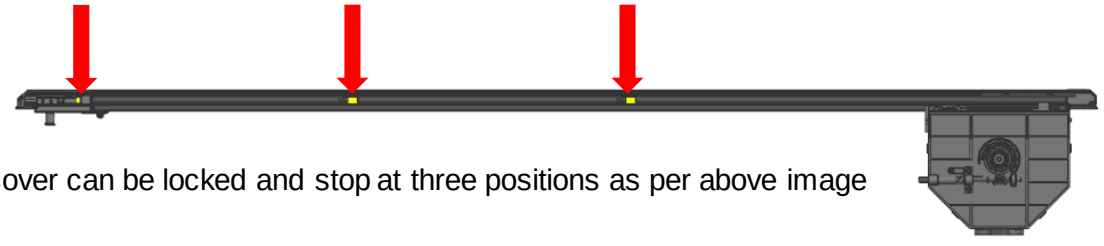

The cover can be locked and stop at three positions as per above image

It is highly recommended that, when operating the cover with the strap, keep the strap as horizontal as possible.

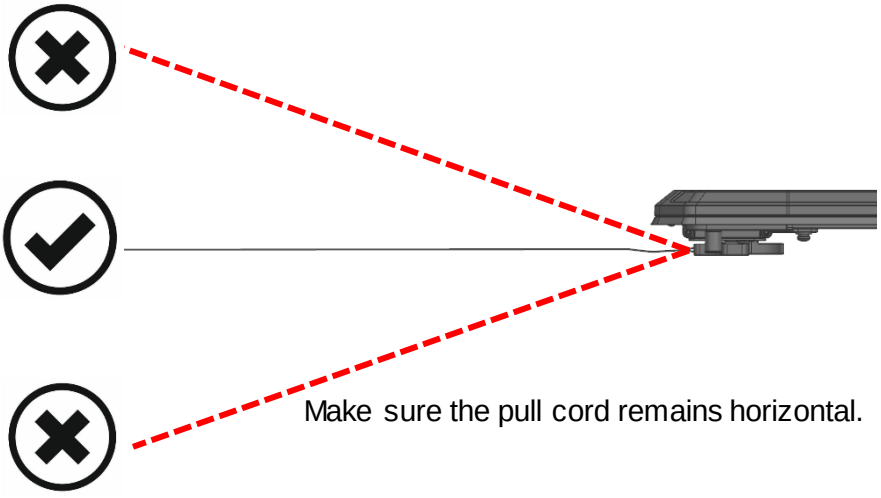

IMPORTANT NOTES:

1. Grease the inner track of the side rail

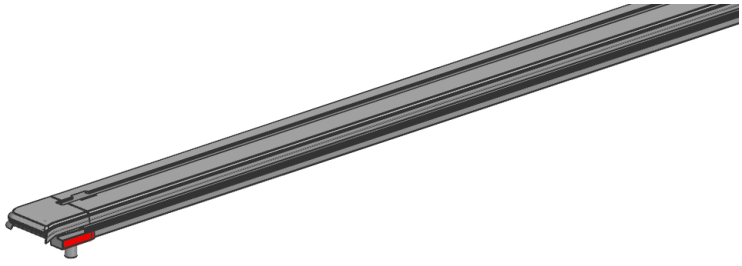

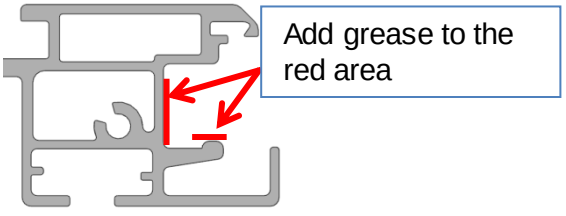

2. To adjust the tightness of the spring, push the worm forward and then rotate it, and you can adjust the tightness of the spring.

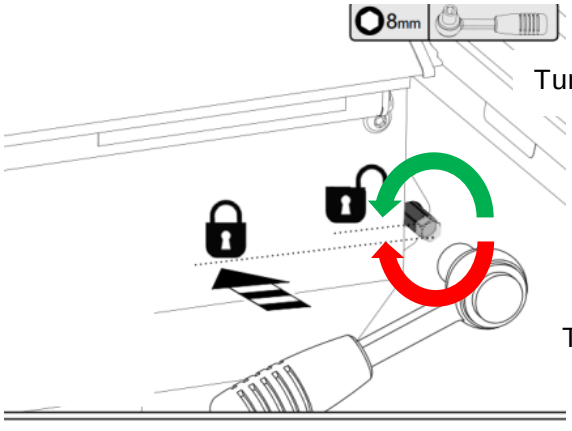

3. Procedure of cleaning the canister:

- Make sure the tonneau cover is fully closed
- Temporarily Remove the plastic caps and the 5mm x 10mm flat head screws

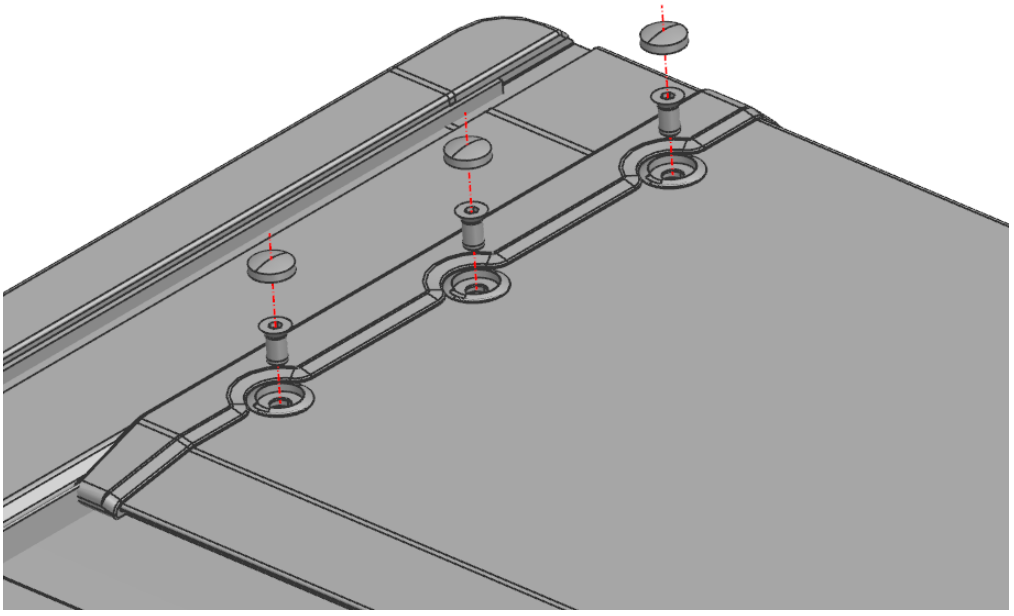

- Rotate the cover panel up. If sealant was applied to the front rubber seal, carefully rotate the cover to prevent damage to the rubber seal

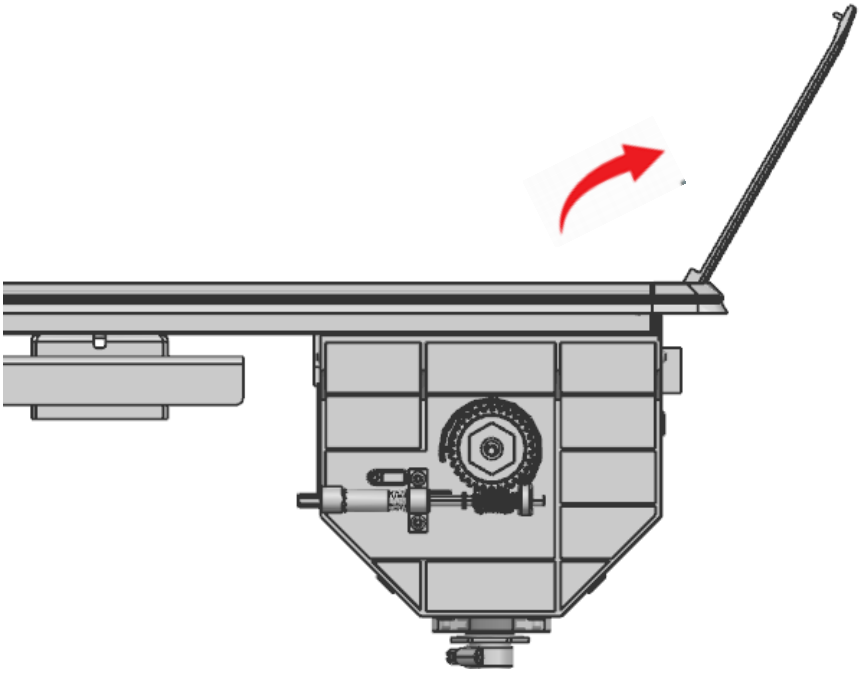

- Clean the canister of any dirt/debris that has accumulated inside.

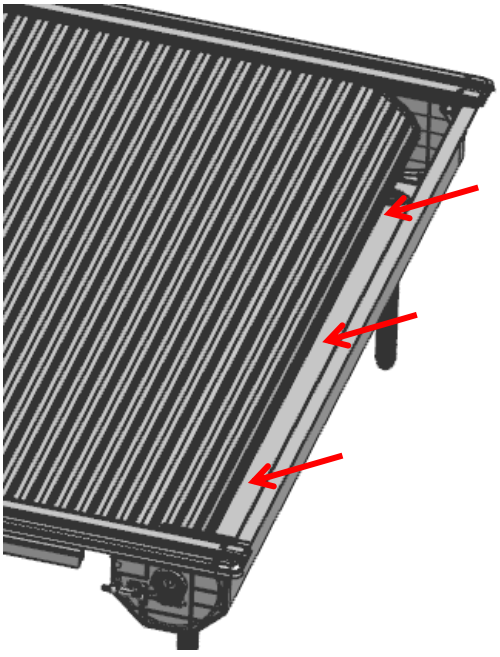

- After cleaning, reinstall the cover panel, 5mm x 10mm flat head screws, and plastic caps accordingly

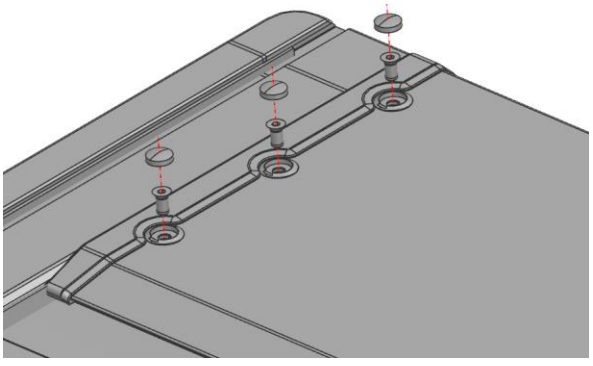

- Press the rubber trim firmly into the side rail, reapply sealant to front rubber seal as needed.

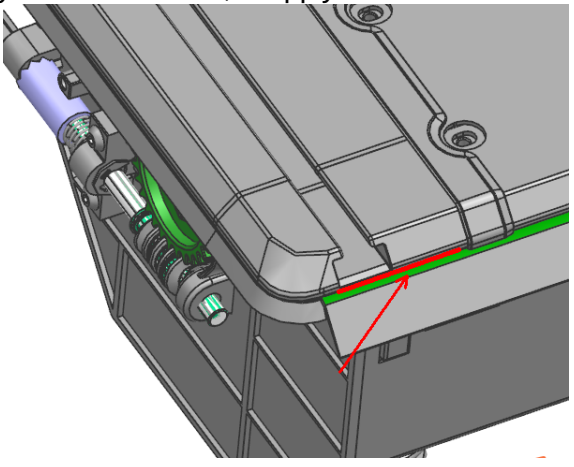

Note: These steps should be carried out every 3 months for product maintenance and calibration.
If there are special circumstances, the maintenance and calibration periods can be shortened according to the actual situation to ensure the product is always in the best working condition.

By purchasing any item sold by Rough Country, LLC, the buyer expressly warrants that he/she is in compliance with all applicable, State, and Local laws and regulations regarding the purchase, ownership, and use of the item. It shall be the buyers responsibility to comply with all Federal, State and Local laws governing the sales of any items listed, illustrated or sold. The buyer expressly agrees to indemnify and hold harmless Rough Country, LLC for all claims resulting directly or indirectly from the purchase, ownership, or use of the items.