51212Box1

ROUGH COUNTRY
SUSPENSION SYSTEMS®

Thank you for choosing Rough Country for all your vehicle needs.

Please read instructions before beginning installation. Check the kit hardware against the kit contents shown below. Be sure you have all needed parts and know where they go.

If question exist, please call us @1-800-222-7023. We will be happy to answer any questions concerning this product. Check all fasteners for proper torque. Check to ensure for adequate clearance between all components. Periodically check all hardware for tightness.

PARTS LIST:

Qty	Item Description	Qty	Item Description
1	Bumper Base	1	PS/right Fill in Mesh Panel
1	DS/Left Shackle Mount	2	12-1.75mm x 60mm Single-Bolt Plate
1	PS/Right Shackle Mount	2	12mm Nut Plate
1	DS/Left mounting bracket	6	12mm Plastic Retainers
1	PS/Right mounting bracket	2	12x40mm Bolt Plate
2	Plastic Plugs for License Plate	14	12mm Lock Washers
10	Wire Harness ties	10	12mm Hex Nut
6	D19 Anti-collision rubber stoppers	4	12-1.75mm x 60mm Hex Bolt
2	Sensor harness extension	18	12mmx32mmx3mm Flat Washers
12	Flat Head Self Tapping Screw ST4_15	4	12-1.75mm x 110mm Hex Bolts
6	15.5mm x 25mm OD x 2mm Foam Washer	4	6mm Flange Nut
6	20mm x 10mm Foam Spacers	14	6-1.00mm x 20mm Combo Bolts
6	Plastic Plug (Without sensors) (PP)	4	16mm Hex Nuts
6	Retaining Cap (PP)	4	16-2.00mm x 110mm Hex Bolts
2	U-Shaped Cover Plate	8	16mmx30mmx3mm Flat Washers
1	License plate bracket	4	16mm Lock Washers
1	DS/left Fill in Mesh Panel	1	4mm Allen Wrench

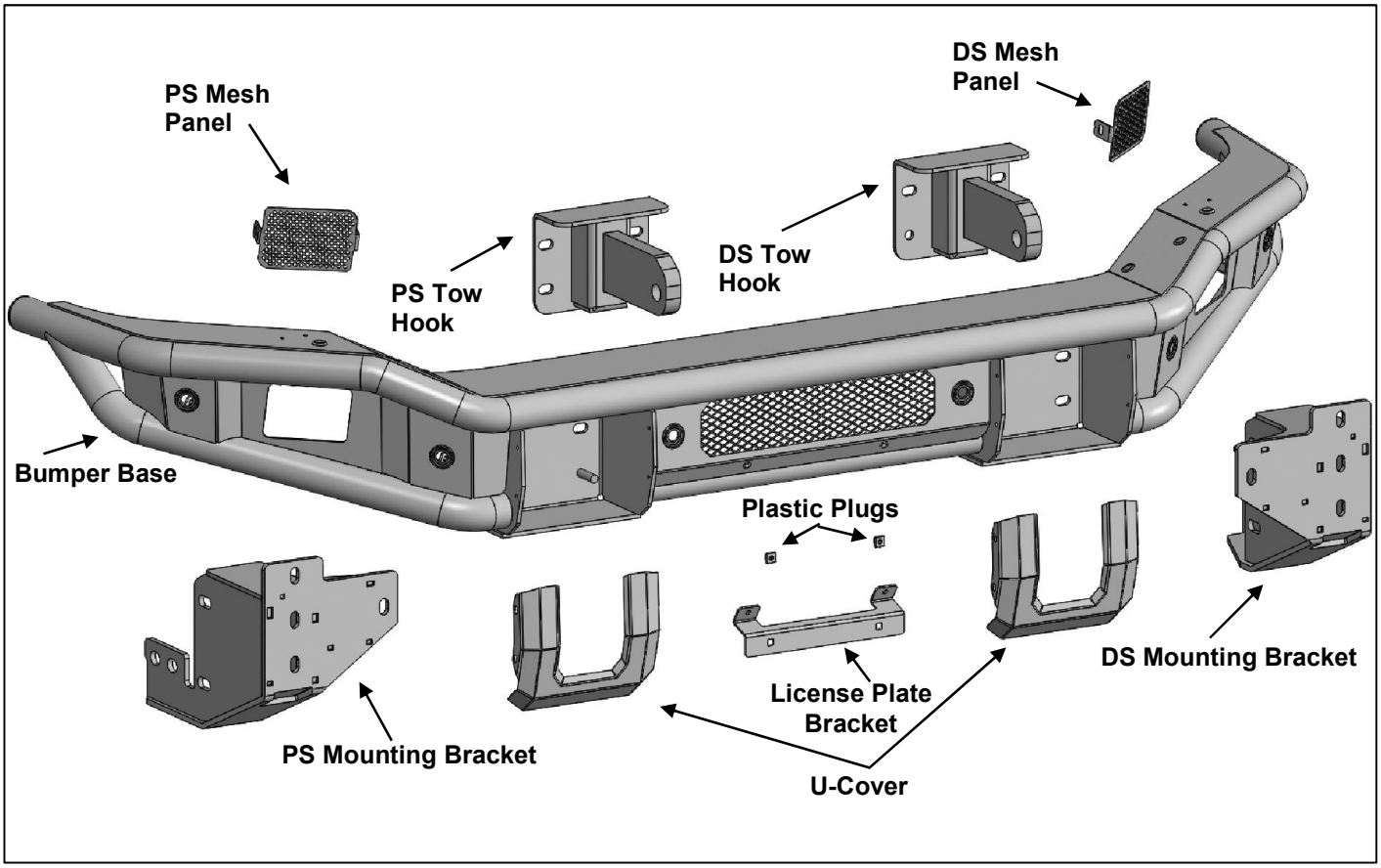
PS Mesh Panel
DS Mesh Panel
PS Tow Hook
DS Tow Hook
Bumper Base
Plastic Plugs
License Plate Bracket
DS Mounting Bracket
PS Mounting Bracket
U-Cover

TOOLS REQUIRED

Rachet	Sockets	Extensions	Wrench

1 Follow (Fig 1 – 3) to remove factory bumper and prepare vehicle and Bumper for HD4 Bumper installation.

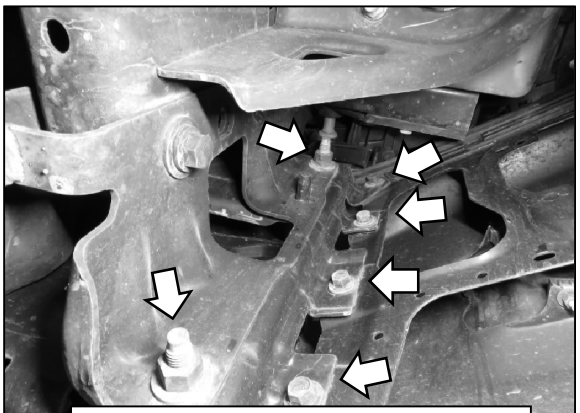

(Fig 1) Remove hardware holding factory bumper to vehicle

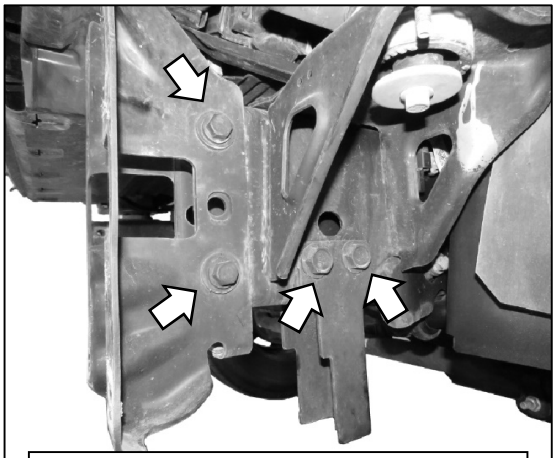

(Fig 2) Remove hardware from factory bumper to clear mounting location

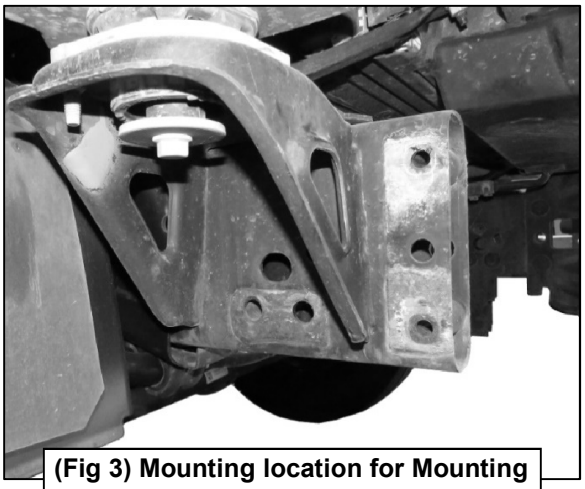

(Fig 3) Mounting location for Mounting Bracket (Passenger/Right pictured)

2

Follow (Fig 4 – 8) to attach parking sensors to vehicle if using, plastic plugs otherwise, and attach LED Lights if using, mesh covers if otherwise.

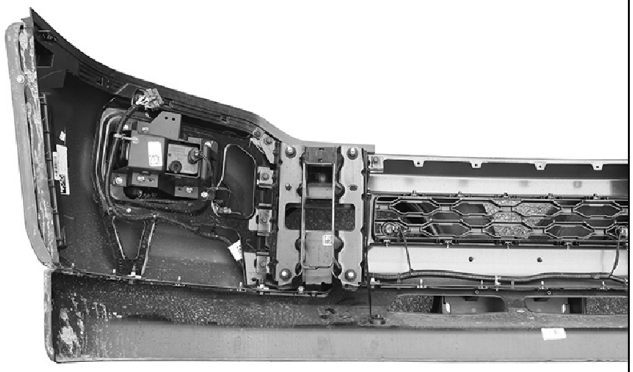

(Fig 4) Remove harness and parking sensors from factory bumper if equipped

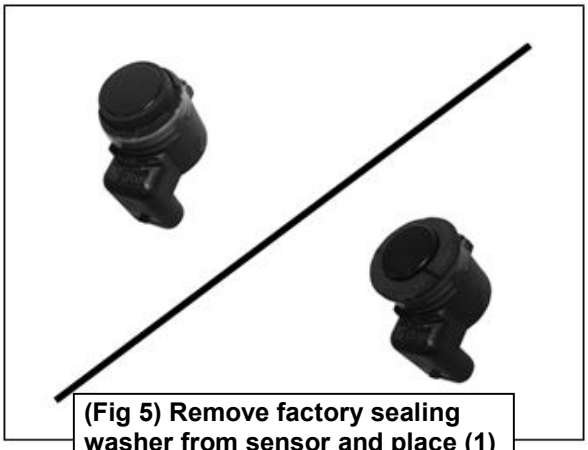

(Fig 5) Remove factory sealing washer from sensor and place (1) Foam Washer over the sensor (Inner Z-shaped sensor pictured)

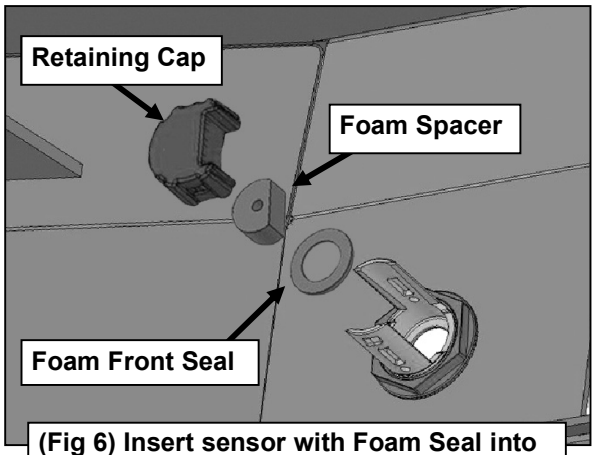

(Fig 6) Insert sensor with Foam Seal into sensor Mount. Place Foam Spacer onto sensor. Snap Cap onto sensor and Mount

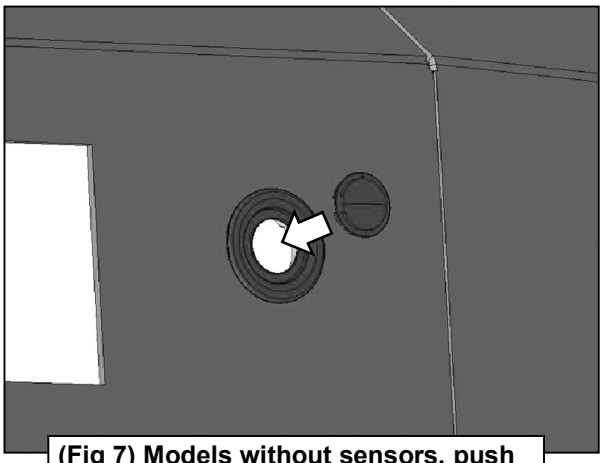

(Fig 7) Models without sensors, push Plastic Plugs into the sensor mounts

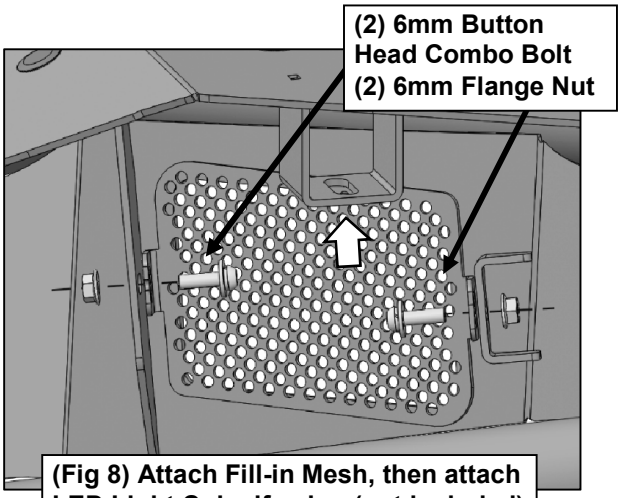

(Fig 8) Attach Fill-in Mesh, then attach LED Light Cube if using (not included)

3

Follow (Fig 9 – 20) to install Mounting Bracket to vehicle, then attach Bumper to Mounting Bracket. Then install Tow Hook, U-cover, and License plate mount. Ensure hardware is hand tightened.

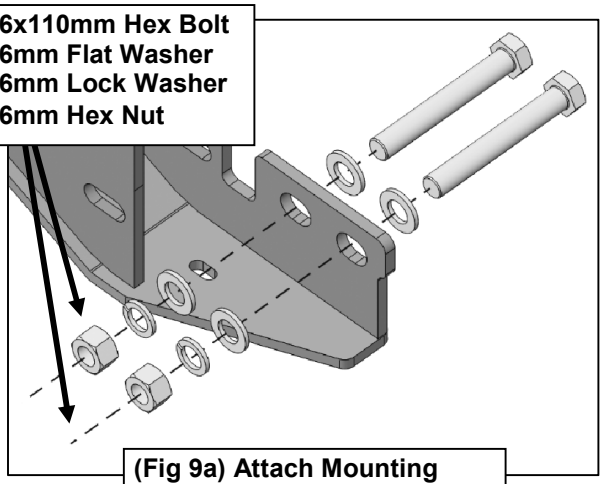

(Fig 9a) Attach Mounting Bracket to mounting location

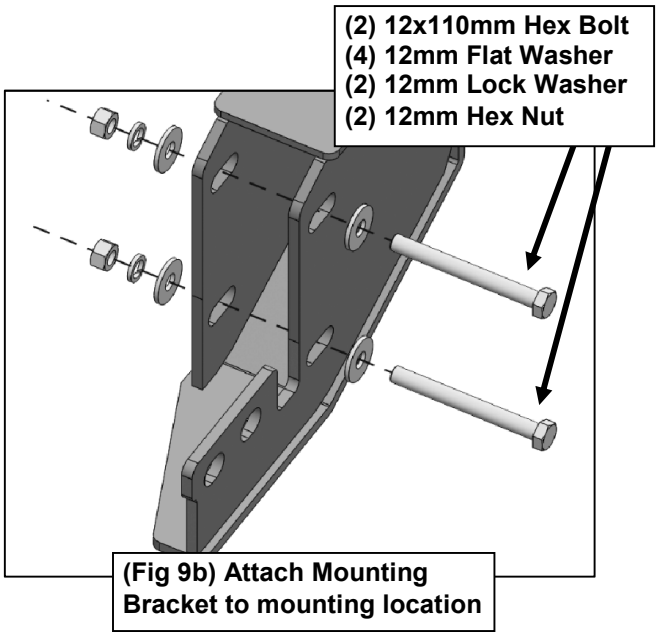

(Fig 9b) Attach Mounting Bracket to mounting location

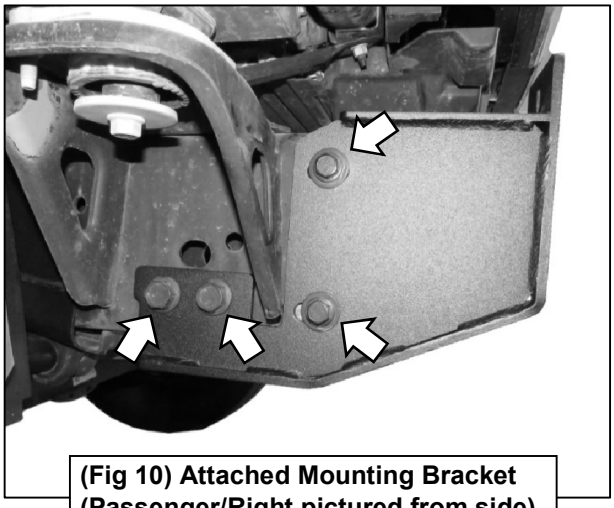

(Fig 10) Attached Mounting Bracket (Passenger/Right pictured from side)

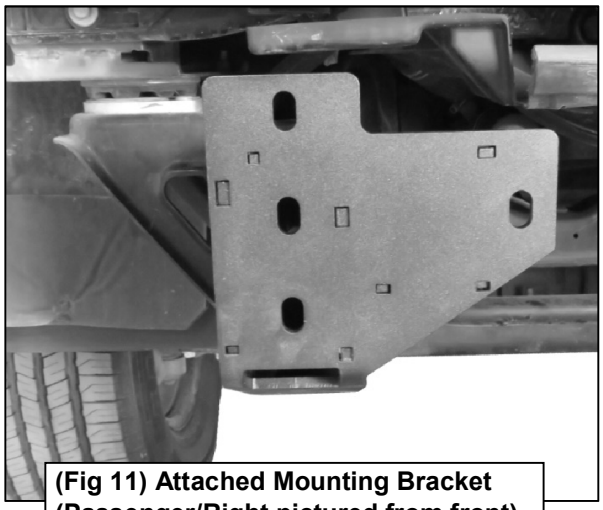

(Fig 11) Attached Mounting Bracket (Passenger/Right pictured from front)

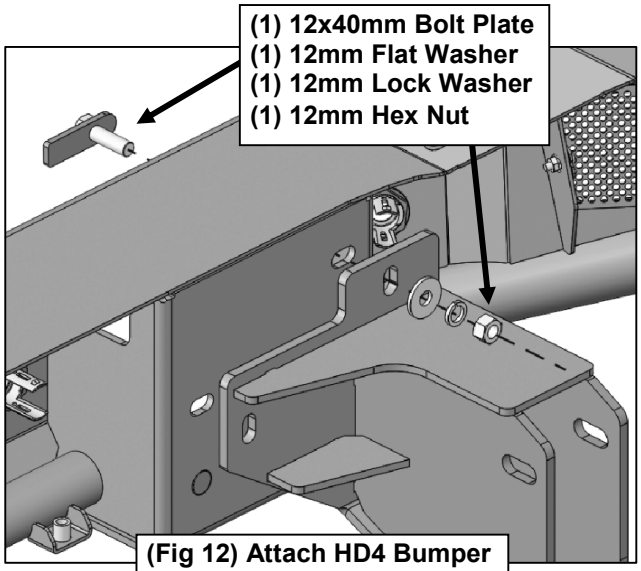

(Fig 12) Attach HD4 Bumper to Mounting Bracket

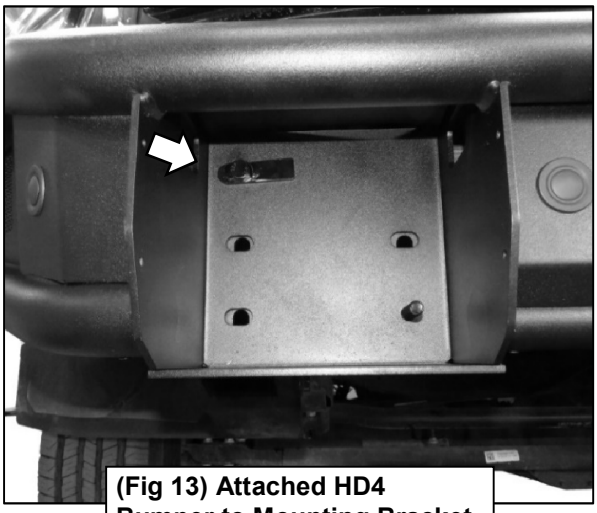

(Fig 13) Attached HD4 Bumper to Mounting Bracket

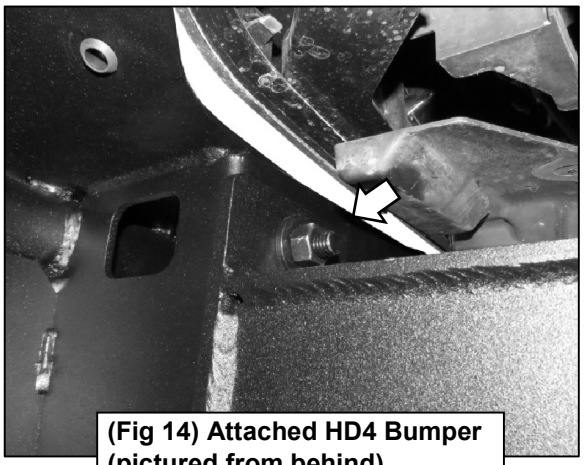

(Fig 14) Attached HD4 Bumper (pictured from behind)

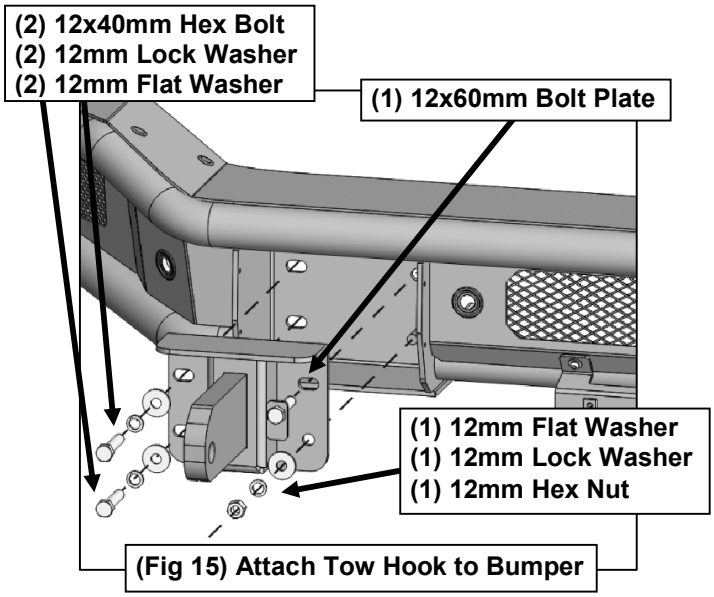

(Fig 15) Attach Tow Hook to Bumper

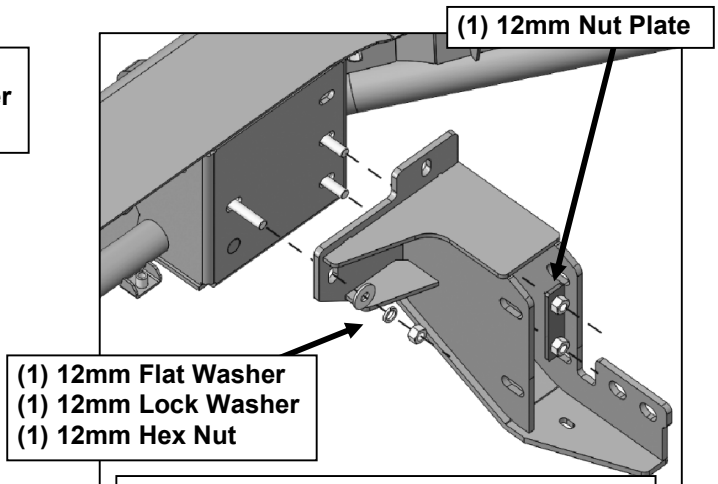

(Fig 16) Attach Tow Hook to Bumper, and through Bumper to Mounting Bracket

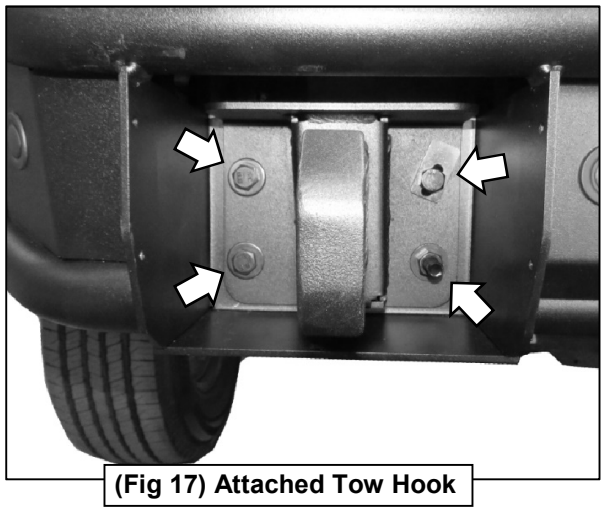

(Fig 17) Attached Tow Hook

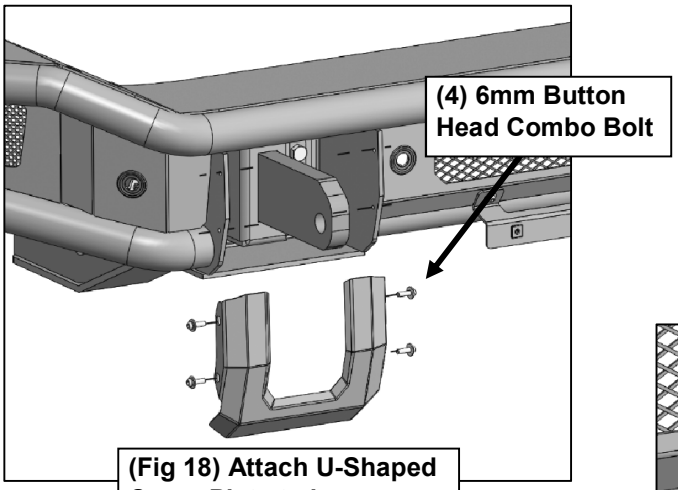

(Fig 18) Attach U-Shaped Cover Plate to bumper

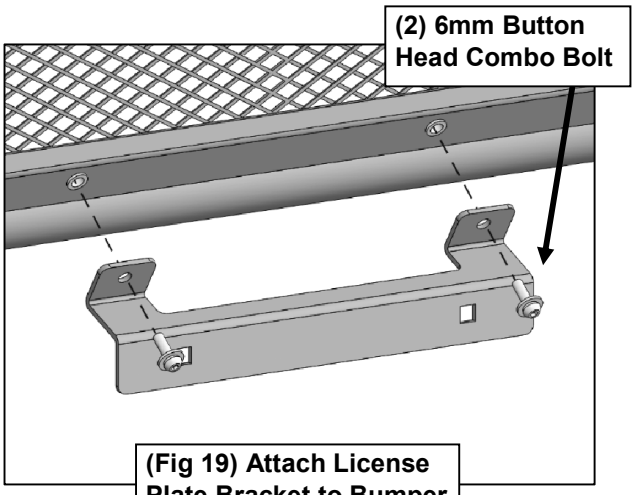

(Fig 19) Attach License Plate Bracket to Bumper

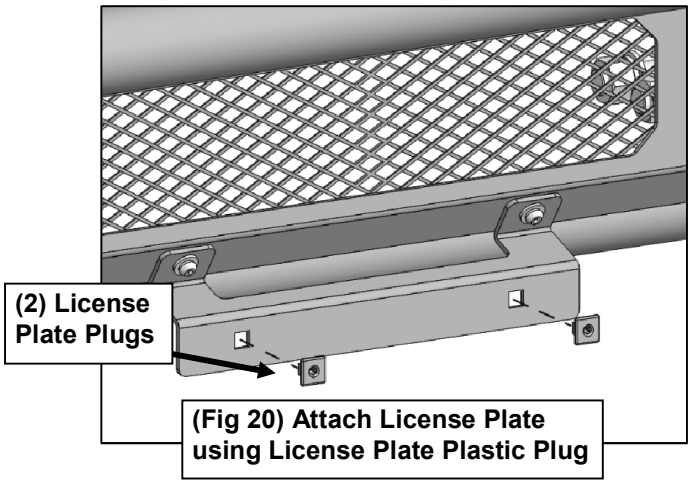

(Fig 20) Attach License Plate using License Plate Plastic Plug

4

Ensure Bumper is level and fits properly, then tighten all hardware and double check all connections. Installation is complete. Do periodic inspections to the installation to make sure that all hardware is secure and tight.

Completed Installation (BN Hoop and Skid Plate not included)

By purchasing any item sold by Rough Country, LLC, the buyer expressly warrants that he/she is in compliance with all applicable, State, and Local laws and regulations regarding the purchase, ownership, and use of the item. It shall be the buyers responsibility to comply with all Federal, State and Local laws governing the sales of any items listed, illustrated or sold. The buyer expressly agrees to indemnify and hold harmless Rough Country, LLC for all claims resulting directly or indirectly from the purchase, ownership, or use of the items.