ROUGH COUNTRY

42005B1

Ford 150 (15-26) 250 (17-26) Crew Cab MG2 Step

Thank you for choosing Rough Country for all your vehicle needs.

Please read instructions before beginning installation. Check the kit hardware against the kit contents shown below. Be sure you have all needed parts and know where they go. If question exist, please call us @1-800-222-7023. We will be happy to answer any questions concerning this product. Check all fasteners for proper torque. Check to ensure for adequate clearance between all components. Periodically check all hardware for tightness.



Torque Specs:

Size	Grade 5	Grade 8	Size	Class 8.8	Class 10.9
5/16”	15 ft/lbs	20ft/lbs	6MM	5ft/lbs	9ft/lbs
3/8”	30 ft/lbs	35ft/lbs	8MM	18ft/lbs	23ft/lbs
7/16”	45 ft/lbs	60ft/lbs	10MM	32ft/lbs	45ft/lbs
1/2”	65 ft/lbs	90ft/lbs	12MM	55ft/lbs	75ft/lbs
9/16”	95 ft/lbs	130ft/lbs	14MM	85ft/lbs	120ft/lbs
5/8”	135ft/lbs	175ft/lbs	16MM	130ft/lbs	165ft/lbs
3/4”	185ft/lbs	280ft/lbs	18MM	170ft/lbs	240ft/lbs

PARTS LIST:

2	Running Boards	30	8mm Flat Washer
6	Mounting Brackets (left or right)	12	8mm Lock Washers
6	8mm Double Bolt Plates	12	8mm Hex Nuts
18	8mm Plastic Retainers	18	8mm Nylon Lock Nuts

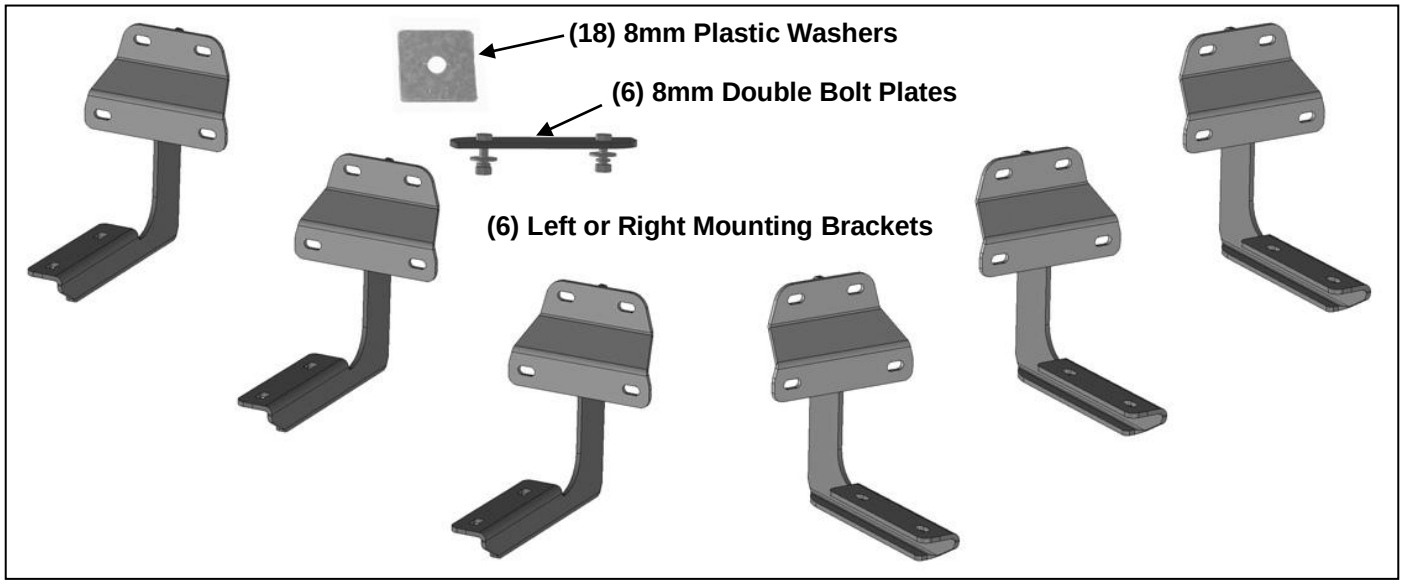

PROCEDURE:

REMOVE CONTENTS FROM BOX. VERIFY ALL PARTS ARE PRESENT. READ INSTRUCTIONS CAREFULLY BEFORE STARTING INSTALLATION. ASSISTANCE IS RECOMMENDED.

1. Start the installation under the driver side of the vehicle. Locate the front factory running board mounting location, (threaded studs), along the inner side of the body, **(Figure 1)**. **IMPORTANT: Clean mounting studs with wire brush to remove paint and debris.**
2. Slide (1) Plastic Washer over each of the (3) factory mounting studs in the body panel, **(Figures 2—4)**. **IMPORTANT**: The Plastic Washers are designed to prevent corrosion between the aluminum body panel and the steel mounting brackets. **Do not install the Brackets without the Plastic Washers**.
3. Select (1) Mounting Bracket. **NOTE**: All (6) Brackets are universal and will fit left or right side. Attach the Mounting Bracket to the (3) factory studs with (3) 8mm Flat Washers and (3) 8mm Nylon Lock Nuts, **(Figures 4 & 5)**. Leave brackets loose at this time.
4. Repeat **Steps 1—3** to install the center and rear driver side Brackets, **(Figures 6 & 7)**.
5. Carefully unwrap (1) Running Board. Place the Running Board on top of the Brackets. Locate the channels in the bottom of the Running Board. Select (3) 8mm Double Bolt Plates, **(Figure 8)**. Insert the Bolt Plates into the channels in the bottom of the Running Board closest to the Brackets. Lift the Running Board up and guide the studs down through the Brackets.
6. Attach the Running Board to the Brackets with (6) 8mm Flat Washers, (6) 8mm Lock Washers and (6) 8mm Hex Nuts, **(Figures 9 & 10)**. **NOTE**: The Running Board is designed to fit close to the vehicle. It may be necessary to loosen the Bracket hardware slightly and tilt the Brackets downward to insert the Running Board between the Brackets and the body.
7. Level and adjust the Running Board as necessary and fully tighten all hardware. **NOTE**: Line up front end of Running Board approximately 2” back from wheel opening or as desired.
8. Repeat **Steps 1—7** for the passenger/right side Running Board installation, **(Figure 10)**.
9. Do periodic inspections to the installation to make sure that all hardware is secure and tight.

To protect your investment, Do not use any type of polish or wax that may contain abrasives that could damage the finish. Mild soap may be used also to clean the Running Board.

Driver/left Side Installation Pictured

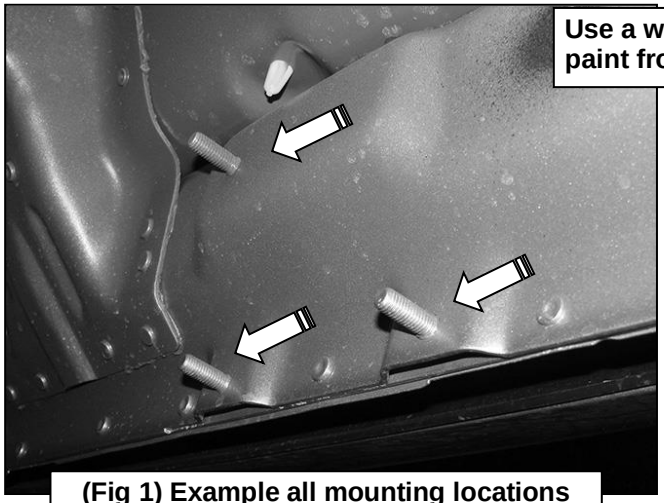

(Fig 1) Example all mounting locations

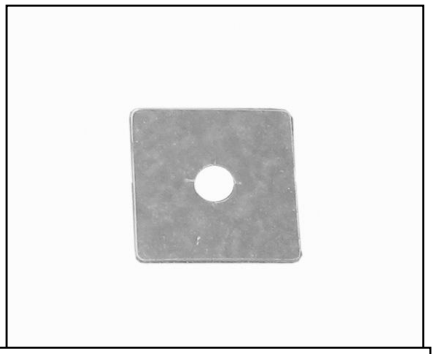

(Fig 2) Plastic Insulation Washer

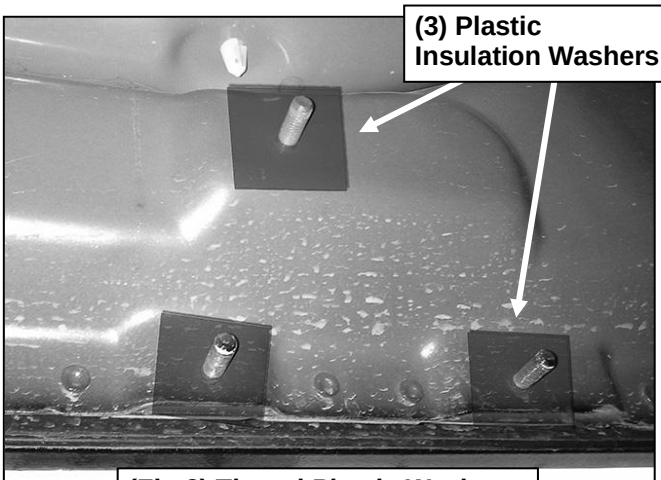

(Fig 3) Thread Plastic Washers onto all mounting studs

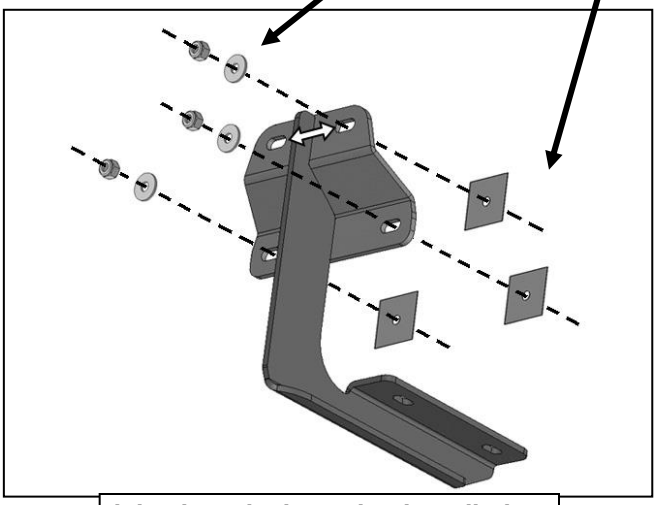

(Fig 4) Typical Bracket installation



(Fig 5) Driver/left front Bracket installed

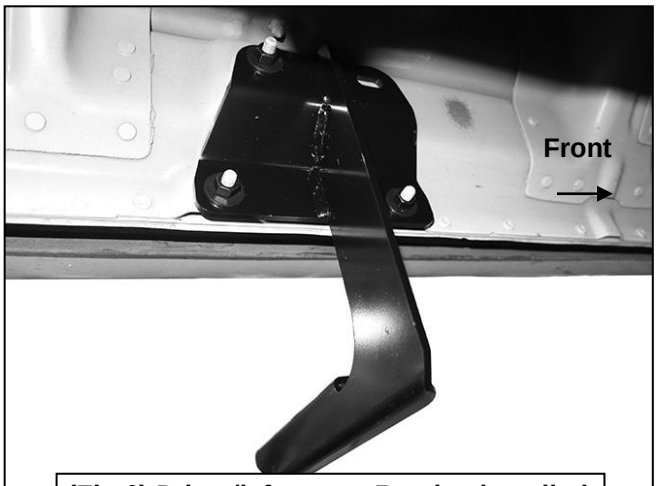

(Fig 6) Driver/left center Bracket installed

Driver side installation pictured

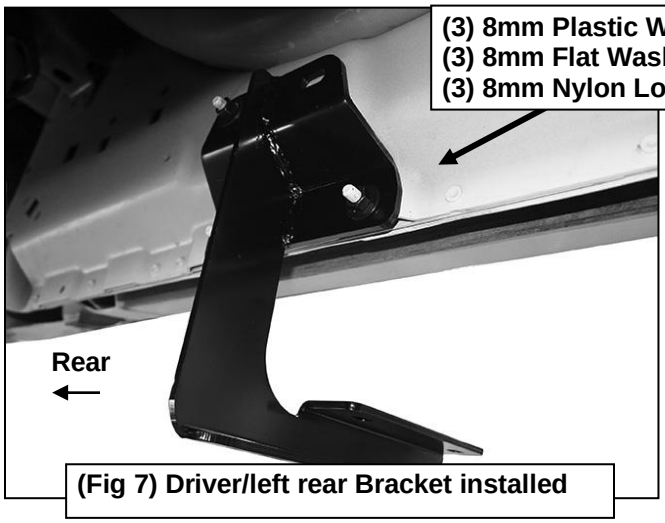

(Fig 7) Driver/left rear Bracket installed

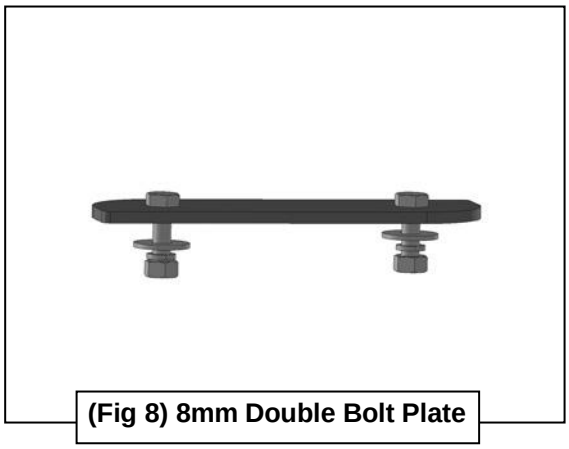

(Fig 8) 8mm Double Bolt Plate

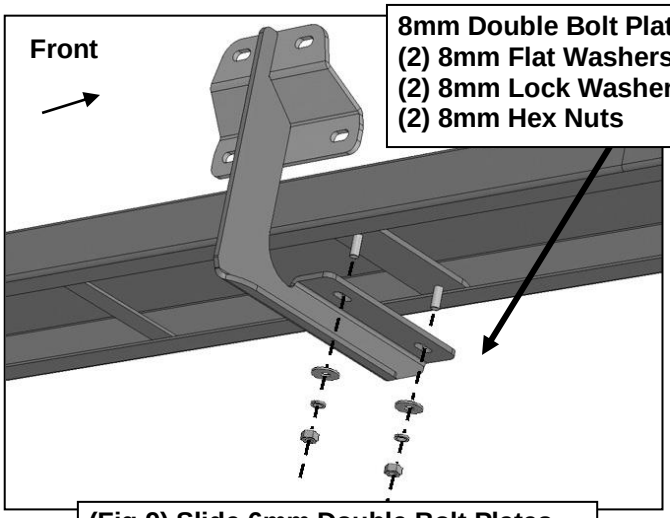

(Fig 9) Slide 6mm Double Bolt Plates into track on bottom of Running Board

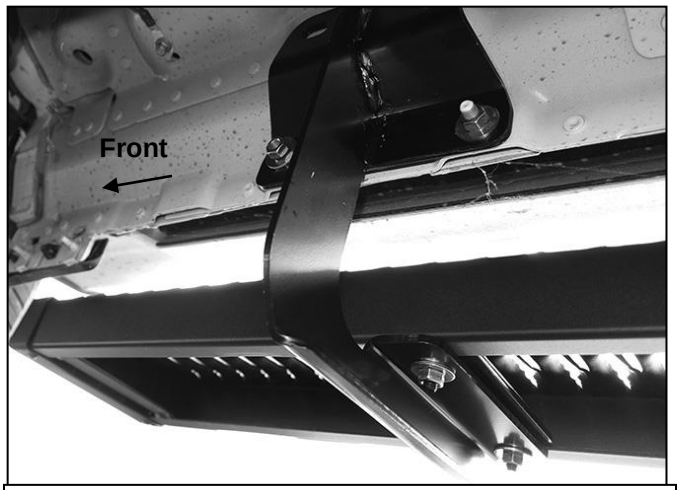

(Fig 10) Passenger/right front complete installation



Complete Installation F250-550



Complete Installation F150

By purchasing any item sold by Rough Country, LLC, the buyer expressly warrants that he/she is in compliance with all applicable, State, and Local laws and regulations regarding the purchase, ownership, and use of the item. It shall be the buyers responsibility to comply with all Federal, State and Local laws governing the sales of any items listed, illustrated or sold. The buyer expressly agrees to indemnify and hold harmless Rough Country, LLC for all claims resulting directly or indirectly from the purchase, ownership, or use of the items.