Specifications

Disposal Description

- GX PRO Series packs all the standard features and reliable performance in a more compact form
- 1/3 Horsepower VORTEX™ Motor has powerful grinding capabilities for everyday kitchen scraps
- VORTEX™ Motor features permanent magnet motor technology designed to help reduce jamming
- Universal Xpress Mount™ fits all Moen and most existing 3-bolt mounting assemblies
- Pre-installed power cord - a savings over models where cord must be purchased separately, cord easily removes for optional hardwiring
- Ultra compact design frees up space under the sink
- Continuous feed with galvanized steel grind components
- Manual Reset Button
- Garbage disposals reduce waste sent to landfills making it an eco-friendly option for your home

Included Components

- GXP33c Disposal Unit with Universal Xpress Mount™
- Pre-installed Power Cord, Hardwire Capable
- Removable Splash Guard
- Drain Stopper and Polished Stainless Steel Sink Flange
- Drain Elbow and Mounting Assembly

Warranty & Assurance

- 2 year limited warranty with in-home service
- Safe for use with properly sized septic systems

Model: GXP33c

c UL US

Critical Dimensions

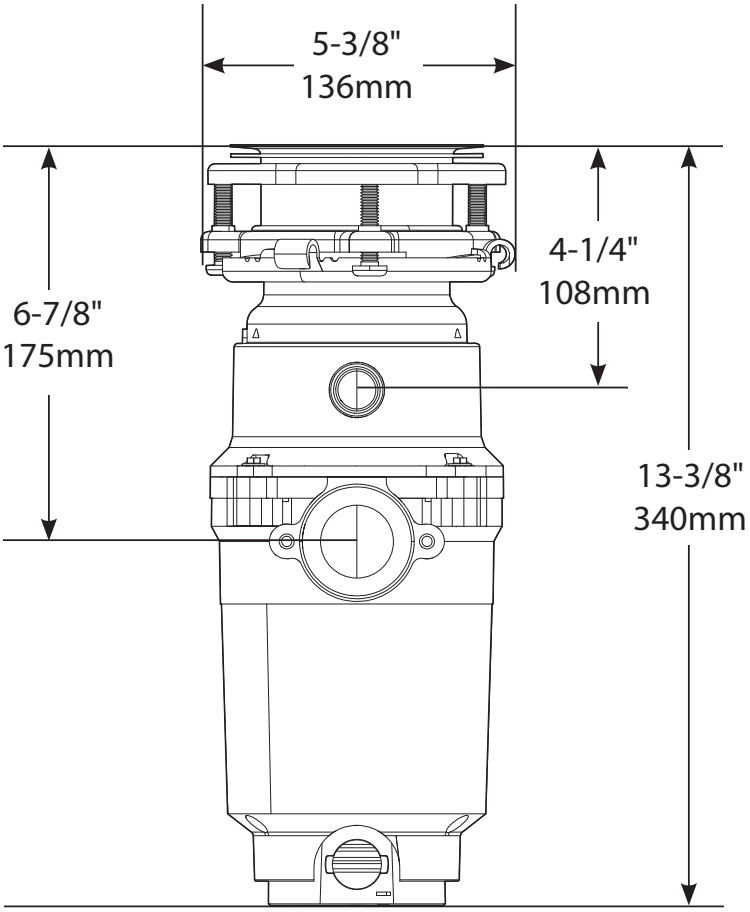

Specification Detail	
Horsepower	1/3 HP
Feed Type	Continuous
On/Off Controls	Wall Switch
Motor Type	Permanent Magnet Motor
RPM (Revolutions Per Minute)	1900
Weight	7.75 lbs. / 3.5 kg
Volts	115
Hz/Amps	60/4.5
Drain Connection Size	1 ½"/ 38mm
Dishwasher Connection Size	7/8"/ 22mm
Maximum Sink Thickness	1/2"/ 13mm
Sink Drain Flange Finish	Polished Stainless Steel
Grind Component Material	Galvanized Steel
Grind Chamber Material	Corrosion Proof Glass Filled Polyester and Nylon

Additional Accessories can be found at www.Moen.com/disposalaccessories

FOR MORE INFORMATION CALL: 1-800-BUY-MOEN
www.moen.com

01/14/2017 SPC-1485 500002A595
Release012