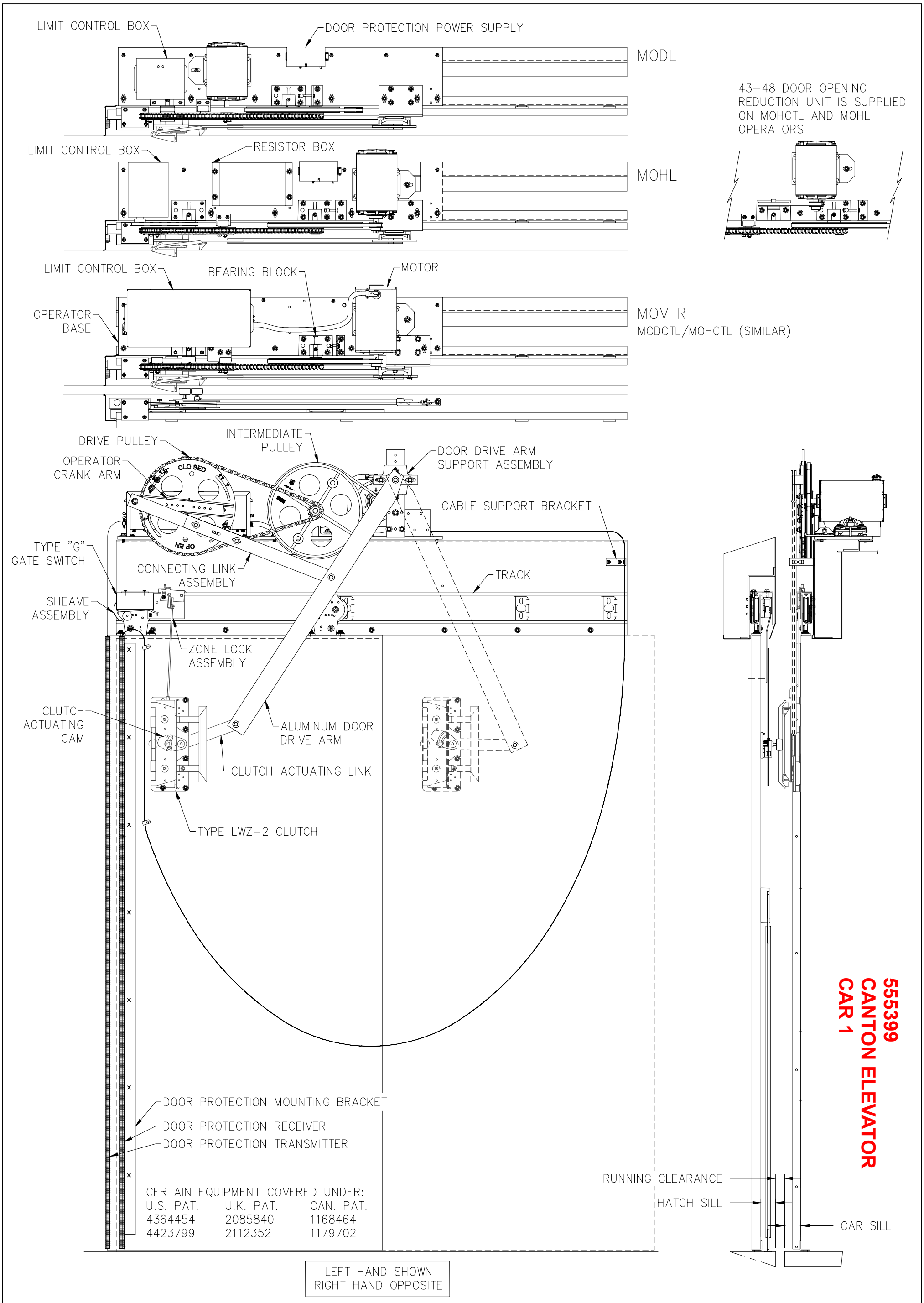

555399
CANTON ELEVATOR
CAR 1

– W A R N I N G –
G.A.L. PROPRIETARY INFORMATION
REPRODUCTION AND/OR USE OF ALL OR ANY PART OF THIS (THESE) PAGE(S) OR DRAWING(S) OR THE INFORMATION HEREIN, WITHOUT THE EXPRESS PERMISSION OF G.A.L. MANUFACTURING CORPORATION IS STRICTLY PROHIBITED BY LAW.
– VIOLATORS WILL BE PROSECUTED –

REV	DESCRIPTION	DATE
E	DRAWING UPDATE	10–14–13
D	TEMPLATE & MOVFR UPDATED	07–09–13
C	LWZ–2 CLUTCH ADDED	10–19–05
B	MOVFR OPERATOR ADDED	05–28–04
A	MOCT OPERATOR ADDED	09–12–95

SINGLE SPEED CAR ASSEMBLY

TYPE "A" HANGER WITH INFRARED DOOR PROTECTION

G.A.L. MANUFACTURING CORP.
50 E. 153rd STREET, BRONX, N.Y. 10451
PHONE: (718) 292–9000, FAX: (718) 292–2034
www.GAL.com, info@GAL.com

DATE 08–31–1994
DOCUMENT No. 8221–1
REV E

45–48	6
22–44	1
DOOR OPNG.	T

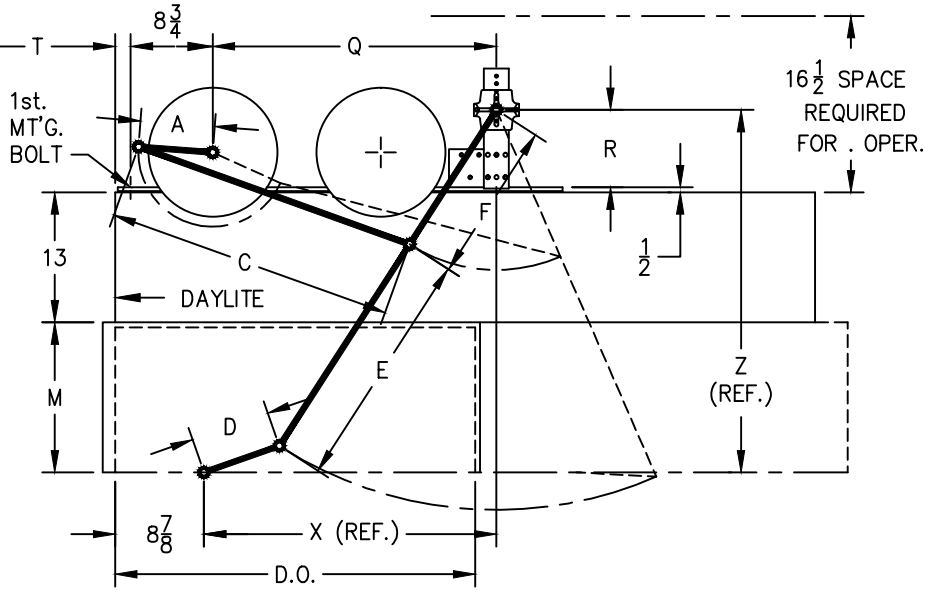

48	10 1/16	34 5/16	12	31	21	23	39 5/8	47 1/2	33 3/4	11
47	9 7/8	34 1/8	12	31	21	23	39 5/8	47 1/2	33 3/4	11
46	9 11/16	33 15/16	12	31	21	23	39 5/8	47 1/2	33 3/4	11
45	9 1/2	33 3/4	12	31	21	23	39 5/8	47 1/2	33 3/4	11
44	9 7/8	34 3/4	10	26	20	19	34 5/8	42	33 3/4	9 1/2
43	9 11/16	34 9/16	10	26	20	19	34 5/8	42	33 3/4	9 1/2
42	9 7/16	34 3/8	10	26	20	19	34 5/8	42	33 3/4	9 1/2
41	9 3/16	34 3/16	10	26	20	19	34 5/8	42	33 3/4	9 1/2
40	9	34	10	26	20	19	34 5/8	42	33 3/4	9 1/2
39	8	29 3/8	8	24	16	15	29 1/4	36 1/4	28 3/8	7 3/4
38	7 13/16	29 3/16	8	24	16	15	29 1/4	36 1/4	28 3/8	7 3/4
37	7 5/8	29	8	24	16	15	29 1/4	36 1/4	28 3/8	7 3/4
36	7 7/16	28 13/16	8	24	16	15	29 1/4	36 1/4	28 3/8	7 3/4
35	7 1/4	28 5/8	8	24	16	15	29 1/4	36 1/4	28 3/8	7 3/4
34	6 1/2	25 3/16	6	25	15	15	25 1/4	37	24 3/8	8 1/2
33	6 3/8	25	6	25	15	15	25 1/4	37	24 3/8	8 1/2
32	6 1/8	24 1/4	6	25	15	15	24 1/2	37 3/8	23 1/2	8 7/8
31	5 15/16	24 1/16	6	25	15	15	24 1/2	37 3/8	23 1/2	8 7/8
30	5 3/4	23 7/8	6	25	15	15	24 1/2	37 3/8	23 1/2	8 7/8
29	6 3/4	27 1/8	10	19	15	11	27 3/4	32	26 7/8	7 1/2
28	6 9/16	26 15/16	10	19	15	11	27 3/4	32	26 7/8	7 1/2
27	6 3/8	26 3/4	10	19	15	11	27 3/4	32	26 7/8	7 1/2
26	6 3/16	26 9/16	10	19	15	11	27 3/4	32	26 7/8	7 1/2
25	6	26 3/8	10	19	15	11	27 3/4	32	26 7/8	7 1/2
24	5 1/2	25 3/8	10	18	14	11	25 7/8	30 3/4	25	6 1/4
23	5 5/16	25 3/16	10	18	14	11	25 7/8	30 3/4	25	6 1/4
22	5 1/8	25	10	18	14	11	25 7/8	30 3/4	25	6 1/4
INCHES	A	C	D	E	F	M	X	Z	Q	R
DOOR OPENING	OPERATOR ARMS		DOOR ARMS			CLUTCH	PIVOT		OPERATOR	

GAL ELEVATOR DEVICES

SINGLE SPEED 22–48 D.O. OPERATOR DATA TABLE

NOV. 11, 1994

DATA21

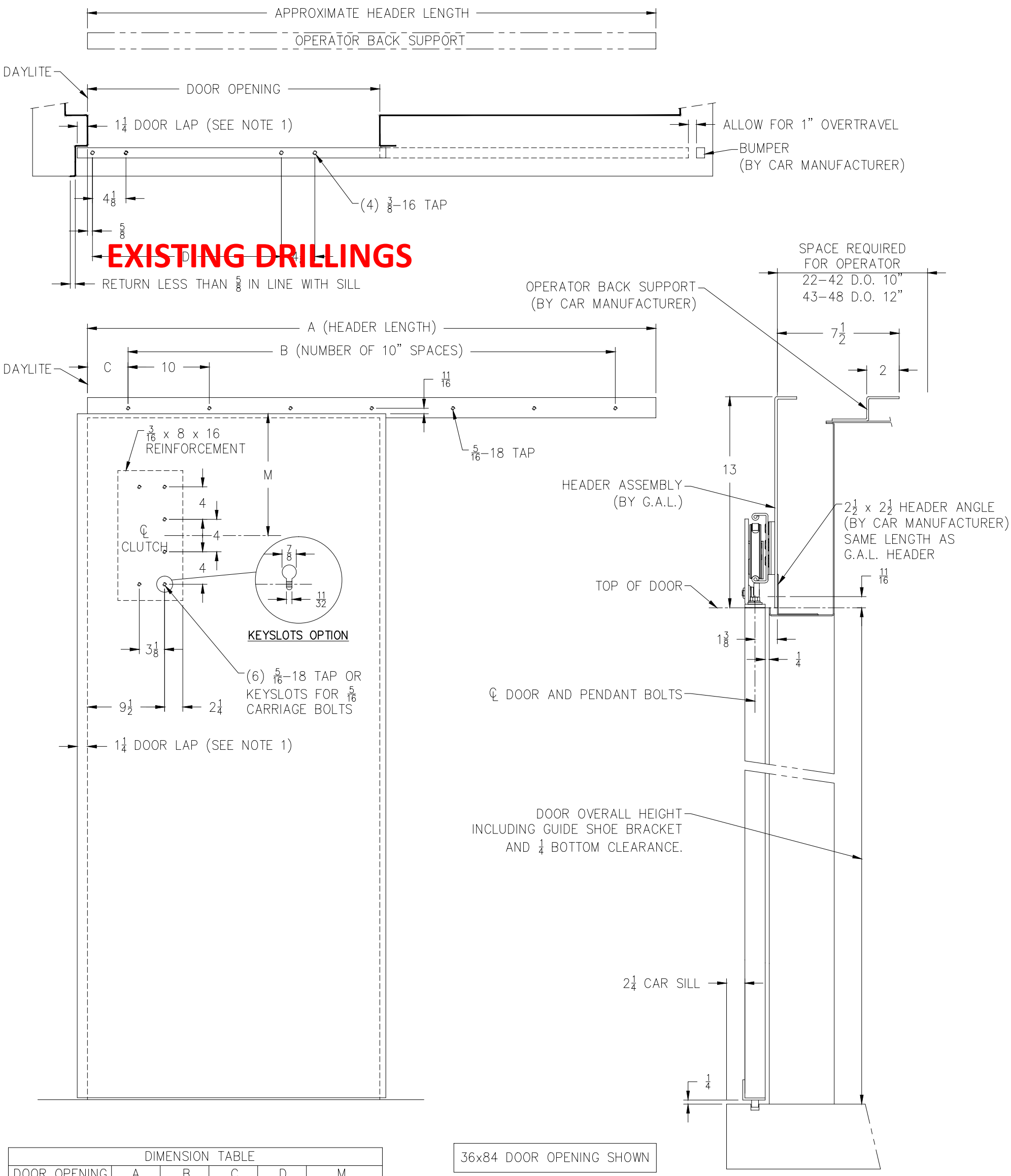

36x84 DOOR OPENING SHOWN

DIMENSION TABLE					
DOOR OPENING	A	B	C	D	M
46–47–48	94	9	2	38	23
43–44–45	88	8	4	35	(45) 23 (43–44) 19
40–41–42	82	7	6	32	19
37–38–39	76	7	3	29	15
34–35–36	70	6	5	26	15
31–32–33	64	6	2	23	15
28–29–30	58	5	4	20	(30) 15 (28–29) 11
25–26–27	52	4	6	17	11
22–23–24	46	4	3	14	11

NOTES:

1. CLUTCH, PENDANT BOLT AND HEADER HANGER SUPPORT DRILLINGS LOCATED FROM DAYLITE, REGARDLESS OF DOOR LAP SIZE. G.A.L. PREFERS 1 1/4 LAP AT THE LEADING EDGE ONLY.
2. DRAWINGS ARE BASED ON EQUAL CAR AND HOISTWAY DOOR HEIGHTS ±1 INCH. IF DOOR HEIGHTS DIFFER, NOTIFY G.A.L. AND HOISTWAY DOOR MANUFACTURER.

AS SHOWN L.H. ____

SYMMETRICALLY OPPOSITE R.H. ____

DOOR HEIGHT ____

JAMB HEIGHT ____

– WARNING –
G.A.L. PROPRIETARY INFORMATION
REPRODUCTION AND/OR USE OF ALL OR ANY PART OF THIS (THESE) PAGE(S) OR DRAWING(S) OR THE INFORMATION HEREIN, WITHOUT THE EXPRESS PERMISSION OF G.A.L. MANUFACTURING CORPORATION IS STRICTLY PROHIBITED BY LAW.
– VIOLATORS WILL BE PROSECUTED –

REV	DESCRIPTION	DATE
B	REMOVE SAFETY EDGE AND LAYOUT UPDATE	10–28–13
A	UPDATE TEMPLATE	07–11–13

CAR REINFORCEMENT & DRILLINGS SINGLE SPEED

TYPE "A" HANGER FOR 22–48 DOOR OPENING

G.A.L. MANUFACTURING CORP.
50 E. 153rd STREET, BRONX, N.Y. 10451
PHONE: (718) 292–9000, FAX: (718) 292–2034
www.GAL.com, info@GAL.com

DATE 10–31–1994

DOCUMENT No. 8231

REV B

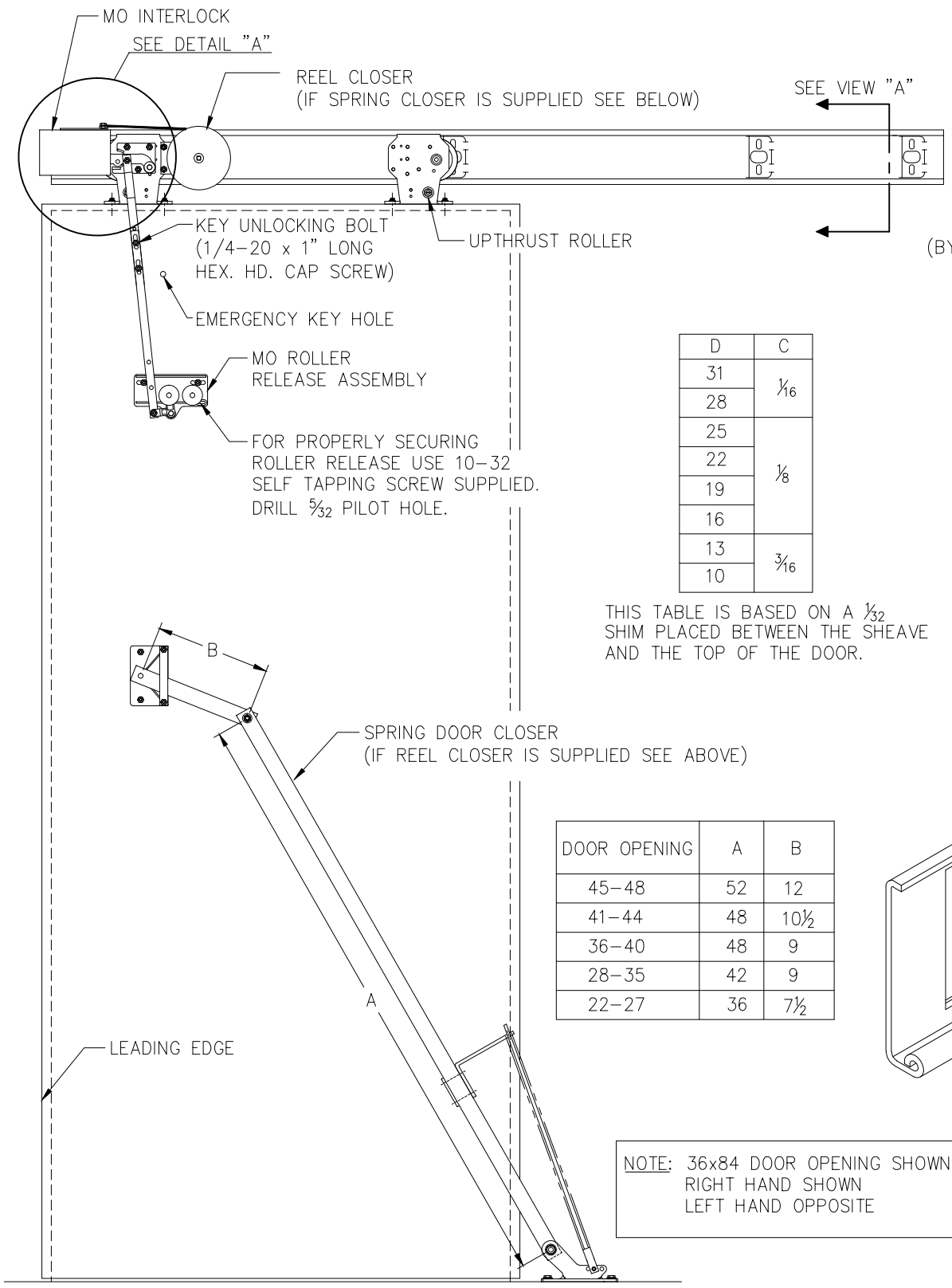

FIGURE 1

D	C
31	1/16
28	
25	1/8
22	
19	
16	
13	3/16
10	

THIS TABLE IS BASED ON A 1/32 SHIM PLACED BETWEEN THE SHEAVE AND THE TOP OF THE DOOR.

DOOR OPENING	A	B
45-48	52	12
41-44	48	10½
36-40	48	9
28-35	42	9
22-27	36	7½

NOTE: 36x84 DOOR OPENING SHOWN
RIGHT HAND SHOWN
LEFT HAND OPPOSITE

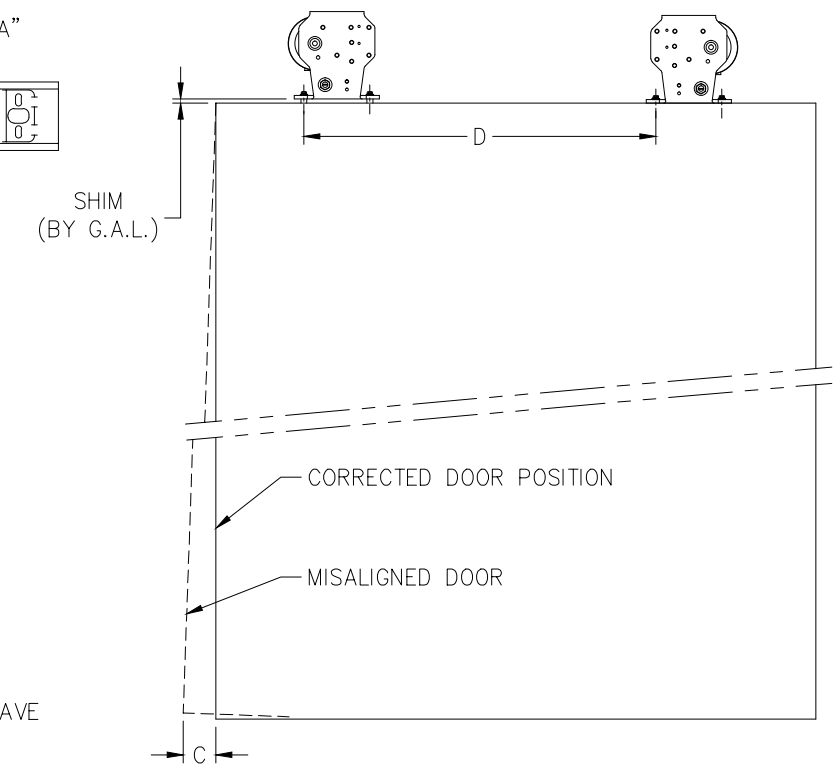

TO CORRECT DOOR MISALIGNMENT

FIGURE 2

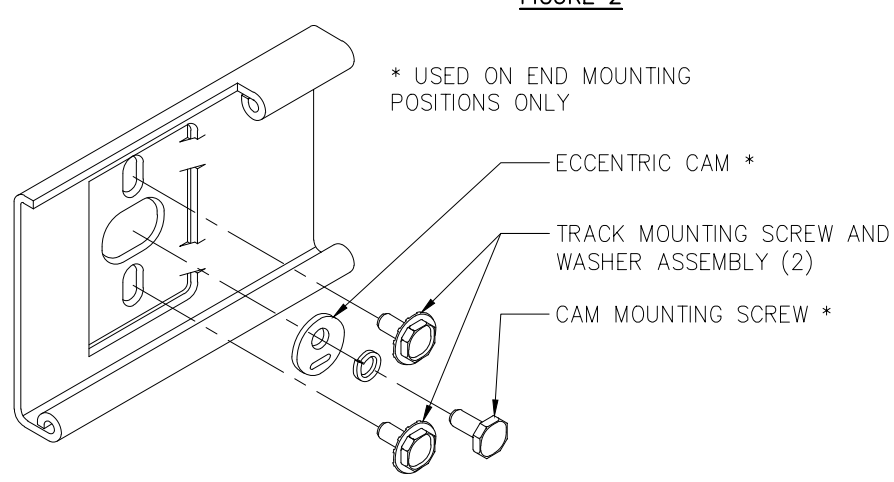

FIGURE 3

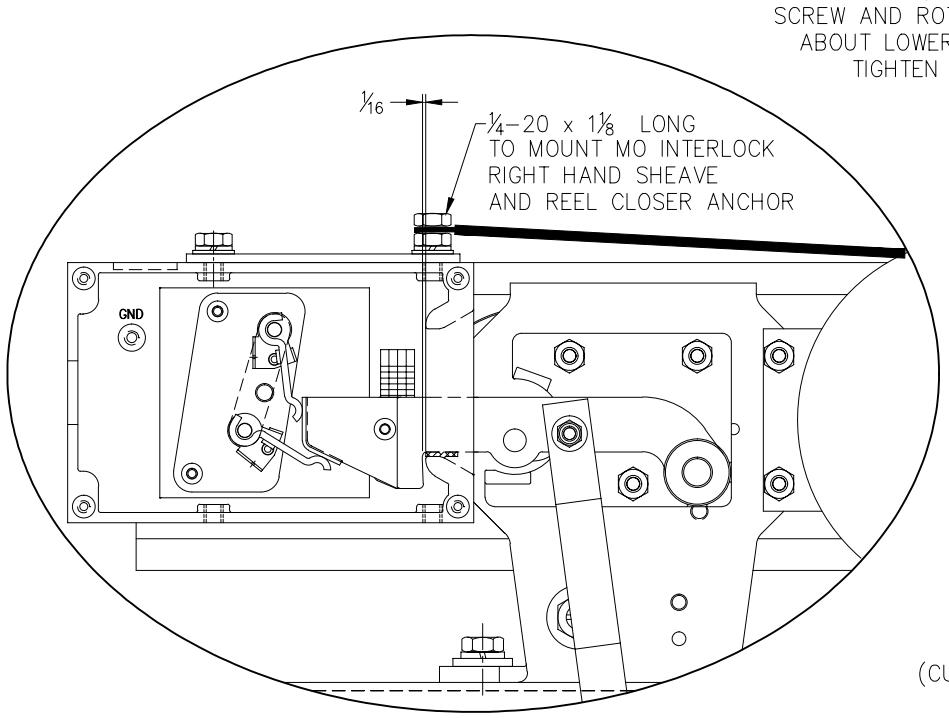

DETAIL "A"

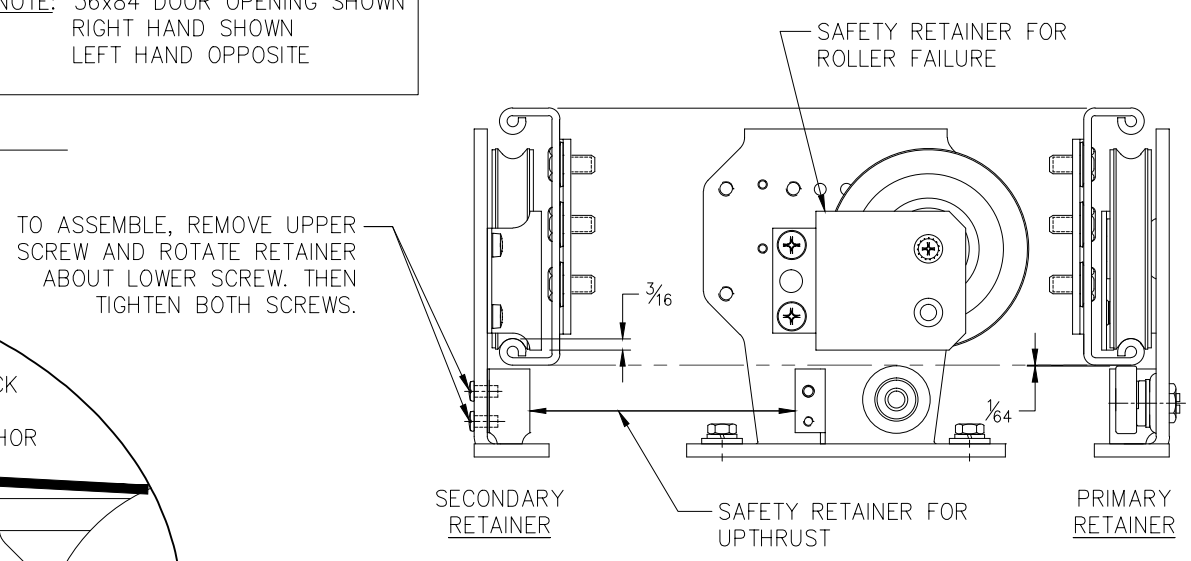

RIGHT HAND SHEAVE

FIGURE 4

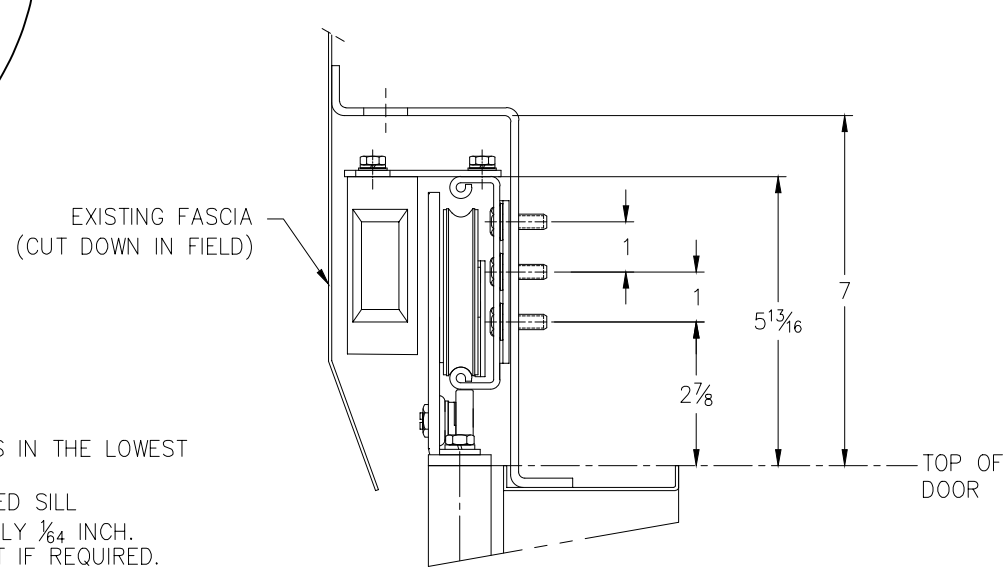

VIEW "A"

INSTALLATION INSTRUCTIONS:

1. MOUNT HANGERS TO DOOR WITH UPTHRUST ROLLERS IN LOWEST POSITION.
2. MOUNT TRACK TO HEADER AND SET ECCENTRIC CAM SO THAT THE TRACK IS IN THE LOWEST POSITION. HAND TIGHTEN ALL SCREWS. SEE FIGURE 3.
3. HANG DOOR ON TRACK AND ROTATE ECCENTRIC CAM TO GIVE DOOR REQUIRED SILL CLEARANCE. ADJUST UPTHRUST ROLLERS TO CLEAR TRACK BY APPROXIMATELY 1/64 INCH.
4. CHECK DOOR MISALIGNMENT IN OPENED AND CLOSED POSITION AND CORRECT IF REQUIRED. SEE FIGURE 2.
5. IF REQUIRED, READJUST THE ECCENTRIC CAM TO GIVE DOOR REQUIRED SILL CLEARANCE.
6. TIGHTEN ALL SCREWS.

– W A R N I N G –
G.A.L. PROPRIETARY INFORMATION
REPRODUCTION AND/OR USE OF ALL OR ANY PART OF THIS (THESE) PAGE(S) OR DRAWING(S) OR THE INFORMATION HEREIN, WITHOUT THE EXPRESS PERMISSION OF G.A.L. MANUFACTURING CORPORATION IS STRICTLY PROHIBITED BY LAW.
– VIOLATORS WILL BE PROSECUTED –

REV	DESCRIPTION	DATE
A	UPDATE TEMPLATE & SPRING CLOSER BASE	10-15-13

SINGLE SPEED HATCH DOOR ASSEMBLY

TYPE "A" HANGER WITH REEL OR SPRING DOOR CLOSER 22-48 DOOR OPENING

G.A.L. MANUFACTURING CORP.
50 E. 153rd STREET, BRONX, N.Y. 10451
PHONE: (718) 292-9000, FAX: (718) 292-2034
www.GAL.com, info@GAL.com

DATE 11-3-94
DOCUMENT No. 8251
REV A

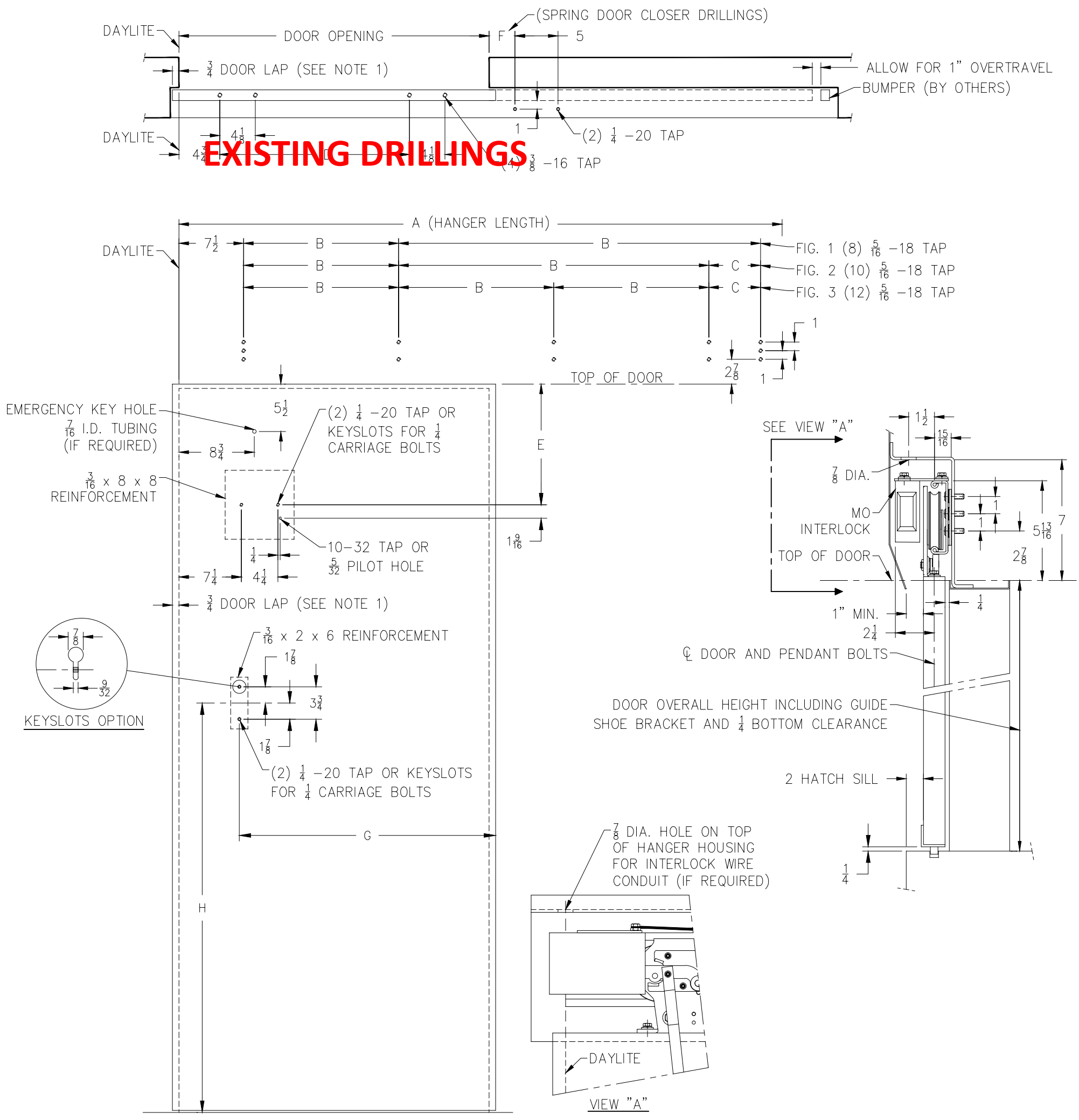

36 x 84 DOOR OPENING SHOWN

AS SHOWN R.H. _____

SYMMETRICALLY OPPOSITE L.H. _____

DOOR HEIGHT _____

JAMB HEIGHT _____

DIMENSION TABLE					
DOOR OPENING	A	B	C	D	E
46–47–48	94	24 (FIG. 3)	12	34	22
43–44–45	88	24 (FIG. 2)	24	31	(45) 22 (43–44) 18
40–41–42	82	24 (FIG. 2)	24	28	18
37–38–39	76	24 (FIG. 2)	12	25	14
34–35–36	70	24 (FIG. 2)	12	22	14
31–32–33	64	24 (FIG. 1)	–	19	14
28–29–30	58	24 (FIG. 1)	–	16	(30) 14 (28–29) 10
25–26–27	52	18 (FIG. 1)	–	13	10
22–23–24	46	18 (FIG. 1)	–	10	10

DIMENSION TABLE			
DOOR OPENING	F	G	H
45–48	3	36 3/4	50 1/2
41–44	3	33 1/4	46 1/2
36–40	3	29 3/4	47 1/2
28–35	3	27 1/4	42
27	2	24 1/2	36
26	3	23 1/2	36
25	4	22 1/2	36
24	5	21 1/2	36
23	6	20 1/2	36
22	7	19 1/2	36

NOTES:

1. INTERLOCK ROLLER RELEASE, PENDANT BOLT, EMERGENCY KEY HOLE AND HANGER DRILLINGS LOCATED FROM DAYLITE, REGARDLESS OF DOOR LAP SIZE. G.A.L. PREFERS 3/4 LAP.
2. DRAWINGS ARE BASED ON EQUAL CAR AND HOISTWAY DOOR HEIGHTS ±1 INCH. IF DOOR HEIGHTS DIFFER, NOTIFY G.A.L. AND HOISTWAY DOOR MANUFACTURER.

– W A R N I N G –

G.A.L. PROPRIETARY INFORMATION

REPRODUCTION AND/OR USE OF ALL OR ANY PART OF THIS (THESE) PAGE(S) OR DRAWING(S) OR THE INFORMATION HEREIN, WITHOUT THE EXPRESS PERMISSION OF G.A.L. MANUFACTURING CORPORATION IS STRICTLY PROHIBITED BY LAW.

– VIOLATORS WILL BE PROSECUTED –

REV	DESCRIPTION	DATE
B	LAYOUT UPDATE	11–18–13
A	LAYOUT UPDATE	7–11–13

HATCH REINFORCEMENT AND DRILLINGS SINGLE SPEED

TYPE "A" HANGER WITH REEL OR SPRING DOOR CLOSER 22–48 DOOR OPENING

G.A.L. MANUFACTURING CORP.
50 E. 153rd STREET, BRONX, N.Y. 10451
PHONE: (718) 292–9000, FAX: (718) 292–2034
www.GAL.com, info@GAL.com

DATE 11–11–94

DOCUMENT No. 8241

REV B

200/230 VAC IF 230VAC DRIVE IS USED & 500 VA MIN.

100/115 VAC IF 115VAC DRIVE IS USED & 500 VA MIN.

RECOMMENDED FUSE SIZES

4 AMP SLOW BLOW FUSES FOR 230VAC DRIVE. (8 AMP MAX.)

8 AMP SLOW BLOW FUSES FOR 115VAC DRIVE. (12 AMP MAX.)

8 AMP MAX SLOW BLOW FUSE

OFF ON

L1 L2 EGND — 230VAC LINE

GS GS1 — GATE SWITCH

U V W — TO MOTOR

INSTRUCTIONS FOR THE G.A.L. PARAMETER UNIT

CAUTION: To Transfer data from one Drive to another, user must READ (COPY) from the first Drive.

HOW TO READ (COPY) FROM THE DRIVE: Press SET, Press Up Arrow, Press READ, Wait for the Completed Signal from the Display.

HOW TO WRITE (DOWNLOAD) TO THE DRIVE: Press SET, Press Up Arrow, Press WRITE, Wait for the Completed Signal from the Display.

HOW TO CHANGE PARAMETERS: Press SET, Enter Par. number, Press READ, Enter a new Value, Press WRITE, Wait for the Completed Signal from the Display.

CLOSING	PARAMETER#		RANGE	DEFAULT VALUE							
				STANDARD				WATERPROOF			
				C/P		S/O		C/P		S/O	
	REG.	HVY.		REG.	HVY.	REG.	HVY.	REG.	HVY.	REG.	HVY.
MAX. CLOSE SPEED	0	0	0–30	30	30	30	30	30	30	30	30
HOLDING TORQUE	1	11	0–30	3	3	3	3	3	3	3	3
HOLDING SPEED	2	12	0–400	2	2	2	2	1.5	1.5	1.5	1.5
CLOSE TORQUE ■	3	13	0–400	225	225	173	173	173	173	135	135
HIGH SPEED HSC	4	14	0–400	23	12	19	10	14	7	12	6
FINAL SPEED FSC	5	15	0–400	4	4	5	5	3	3	4	4
NUDGING SPD	6	16	0–400	8	8	9	9	5	5	6	6
ACCELERATION TIME	7	17	0–320	9	9	6	6	7	7	10	10
DECELERATION TIME	8	18	0–320	6	6	10	10	17	17	25	25
STALL REV. FORCE	9	19	0–2	1.6	1.6	1.6	1.6	1.6	1.6	1.6	1.6
OVERLOAD	99	99	0–5	3	3	3	3	3	3	3	3

OPENING	PARAMETER#		RANGE	DEFAULT VALUE							
				STANDARD				WATERPROOF			
				C/P		S/O		C/P		S/O	
	REG.	HVY.		REG.	HVY.	REG.	HVY.	REG.	HVY.	REG.	HVY.
QUICK STOP ON REV.	21	31	0–6	0.8	1.0	1.4	1.6	0.8	1.0	1.4	1.6
SLOW START SSO	22	32	0–400	5	5	5	5	5	5	5	5
HIGH SPEED HSO	23	33	0–400	31	16	45	23	24	12	35	18
MEDIUM SPEED MSO	24	34	0–400	14	14	20	20	10	10	15	15
FINAL SPEED FSO	25	35	0–400	3	3	5	5	2	2	3	3
ACCELERATION TIME	26	36	0–320	6	6	4	4	6	6	6	6
DECELERATION TIME	27	37	0–320	6	6	10	10	9	9	10	10
SLOW SPD TORQUE	28	38	0–30	4	4	4	4	4	4	4	4
OPEN TORQUE ■	29	39	0–400	120	100	120	100	100	80	100	80

OPENING AND CLOSING	PARAMETER#	RANGE	DEFAULT VALUE			
			STANDARD		WATERPROOF	
			C/P	S/O	C/P	S/O
CARRIER FREQUENCY	51	2–15	10	10	10	10

C/P = CENTER PARTING DOOR | REG. = REGULAR DOOR
S/O = SIDE OPENING DOOR | HVY. = HEAVY DOOR
■ TO LOWER TORQUE, INCREASE TORQUE PARAMETER VALUE

CONNECT TO GAL PARAMETER UNIT

ALL TERMINALS ARE PLUGGABLE (SEE NOTE 1)

1/2 HP 3 PHASE MTR — EGND — TO EARTH GROUND SEE WARNING

EGND

GATE SW.

TO CONTROLLER

RELAY CONTACTS ARE RATED AT 10 AMP. 250 VAC

NC COM NO — AUX. — AUX. RELAY IS CONTROLLED BY CAM # 7

AUX. RELAY IS OPTIONAL AND AVAILABLE UPON REQUEST.

NC COM NO — DPM — DPM N.O. CONTACT TO MAKE JUST BEFORE GATE SWITCH MAKES FOR G.A.L. FAULT MONITOR TO MEET ANSI A17.1 AND CAN/CSA-B44. DPM RELAY IS CONTROLLED BY CAM # 5.

NC COM NO — REOPEN — REOPEN RELAY ENERGIZES SUBJECT TO DETECTION OF:
–INFRARED DETECTOR EDGES; CONTROLLED BY U5
–STALL REVERSE; CONTROLLED BY PARAMETER 9
–FREQUENCY FAILURE; CONTROLLED BY PARAMETER 0

PIN 1 (IN LINE WITH RED STRIPE)

U5

THIS ENABLE CHIP (U5) IS NEEDED WHEN USED WITH G.A.L. CERTIFIED INFRARED LIGHT DETECTOR EDGES. (SEE NOTE 2)

NC COM NO — DCL — N.C. CONTACT OPENS WHEN THE DOOR REACHES THE LIMIT. DCL RELAY IS CONTROLLED BY CAM # 6.

NC COM NO — DOL — N.C. CONTACT OPENS WHEN THE DOOR REACHES THE LIMIT. DOL RELAY IS CONTROLLED BY CAM # 3.

CONNECTION METHODS

METHOD 1

CONNECT TO ANY VOLTAGE SOURCE FROM 24-230 VOLTS AC OR DC, 30mA MIN.

C O N H (OPTIONAL)

CLOSE OPEN NUDG. HEAVY COM — INPUT SIGNALS

CLOSE — REMOVE THIS RESISTOR IF THE INPUT SIGNAL VOLTAGE IS 60V OR LESS — DOOR CLOSE INPUT INDICATOR

OPEN — REMOVE THIS RESISTOR IF THE INPUT SIGNAL VOLTAGE IS 60V OR LESS — DOOR OPEN INPUT INDICATOR

NUDG. — REMOVE THIS RESISTOR IF THE INPUT SIGNAL VOLTAGE IS 60V OR LESS — NUDGING INPUT INDICATOR

HEAVY — REMOVE THIS RESISTOR IF THE INPUT SIGNAL VOLTAGE IS 60V OR LESS — HEAVY DOOR INPUT INDICATOR

JUMPER JP1

HEAVY DOOR INPUT IS OPTIONAL AND AVAILABLE UPON REQUEST. WHEN HEAVY INPUT IS ACTIVATED, A DIFFERENT PARAMETER SET IS USED FOR OPEN, CLOSE, AND NUDGING.

CN5 CN4 — +V LC SE 0V

CONNECT TO G.A.L. CERTIFIED LIGHT DETECTOR EDGES

METHOD 2

CLOSE (C) OPEN (O) NUDG. (N) HEAVY (H) (OPTIONAL)

CLOSE OPEN NUDG. HEAVY COM — INPUT SIGNALS

CONTROLLER RELAYS MUST HAVE THE SAME COMMON AND RELAY COIL VOLTAGE MUST BE FROM 24V TO 230V AC OR DC.

SUITABLE FOR USE ON A CIRCUIT CAPABLE OF DELIVERING NOT MORE THAN 5000 RMS SYMMETRICAL AMPERES 230 VOLTS MAXIMUM

DRIVE OVERLOAD FACTORY SET AT 2.5 A

G.A.L. CERTIFIED INFRARED DETECTOR EDGES CONNECTION

MFG.	MFG. P/N	CN5			CN4			CONNECTION BETWEEN TX & RX
		V+	LCSE	0V	V+	LCSE	0V	
JANUS	E40/32/GAL	RED		BLACK	RED	BLUE	BLACK GREEN	NONE
FORMULA SYSTEMS	FCU0547US21	BLUE 1	BROWN 2	GREEN YELLOW	BLUE 1	BROWN 2	GREEN YELLOW	NONE
FORMULA SYSTEMS V.2	VS3 1447US01	BROWN	GREEN YELLOW	BLUE	BROWN	GREEN YELLOW	BLUE	NONE
SCANGUARD	DPSG -0001N	BROWN		BLUE	BROWN	BLACK	BLUE	GRAY-GRAY
TRITRONICS	6W	RED	WHITE	BLACK				NONE

NOTES:

1-HEAVY LINES REPRESENT CONNECTIONS FROM ELEVATOR CONTROLLER TO DOOR OPERATOR PC BOARD.

2-MAKE SURE THAT THE ENABLE CHIP U5 IS INSERTED INTO THE SOCKET AS SHOWN.

WARNING:

ALL EQUIPMENT MUST BE INSTALLED AND ADJUSTED TO MEET FEDERAL, STATE, AND LOCAL CODES. TO PREVENT AN ELECTRICAL SHOCK, THE FLEXIBLE METALLIC CONDUIT MUST BE FASTENED FIRMLY TO THE MOTOR AND THE CONTROL BOX. THE CONTROL BOX MUST BE GROUNDED.

G.A.L. MANUFACTURING CORP.
50 E. 153rd STREET BRONX, N.Y. 10451
TEL. 718 292 9000 FAX 718 292 2034

MOVFR DOOR OPERATOR WITH MOVFR II LIMIT CONTROL CONNECTION DIAGRAM

DATE 1–24–05

DOC. No. 8032

REV N 01/17