Foreword

Welcome to the growing group of value–conscious people who drive Toyotas. We are proud of the advanced engineering and quality construction of each vehicle we build.

This Owner’s Manual explains the operation of your new Toyota. Please read it thoroughly and have all the occupants follow the instructions carefully. Doing so will help you enjoy many years of safe and trouble–free motoring. For important information about this manual and your Toyota, read the following pages carefully.

When it comes to service, remember that your Toyota dealer knows your vehicle very well and is interested in your complete satisfaction. Your Toyota dealer will provide quality maintenance and any other assistance you may require.

If there is not a Toyota dealer near you, please call the following number:

U.S. OWNERS:
- When traveling in the U.S. mainland or Canada:
  Toyota Customer Experience Center **Toll–free:1–800–331–4331**
- Hawaii:
  Servco Automotive Customer Services **Toll–free:1–888–272–5515**

CANADIAN OWNERS:
- When traveling in Canada or the U.S. mainland:
  Toyota Canada Customer Interaction Centre **Toll–free:1–888–TOYOTA–8 or 1–888–869–6828**

Please leave this Owner’s Manual in this vehicle at the time of resale. The next owner will need this information also.

All information and specifications in this manual are current at the time of printing. However, because of Toyota’s policy of continual product improvement, we reserve the right to make changes at any time without notice.

Please note that this manual applies to all models and explains all equipment, including options. Therefore, you may find some explanations for equipment not installed on your vehicle.

Please access our websites for further information.

- The U.S. mainland **www.toyota.com**
- Hawaii **www.toyotahawaii.com**
- Canada **www.toyota.ca**

TOYOTA MOTOR CORPORATION

© 2008 TOYOTA MOTOR CORPORATION

All rights reserved. This material may not be reproduced or copied, in whole or in part, without the written permission of Toyota Motor Corporation.

Important information about this manual

Safety and vehicle damage warnings

Throughout this manual, you will see safety and vehicle damage warnings. You must follow these warnings carefully to avoid possible injury or damage.

The types of warnings, what they look like, and how they are used in this manual are explained as follows:

⚠ CAUTION

This is a warning against anything which may cause injury to people if the warning is ignored. You are informed about what you must or must not do in order to reduce the risk of injury to yourself and others.

NOTICE

This is a warning against anything which may cause damage to the vehicle or its equipment if the warning is ignored. You are informed about what you must or must not do in order to avoid or reduce the risk of damage to your vehicle and its equipment.

Safety symbol

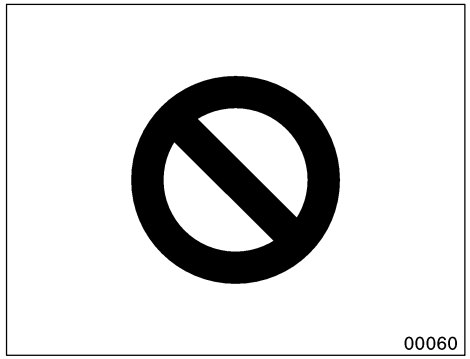

When you see the safety symbol shown above, it means: “Do not...”; “Do not do this”; or “Do not let this happen”.

Important information about your Toyota

Occupant restraint systems

Toyota encourages you and your family to take the time to read Section 1–3 of this Owner’s Manual carefully. In terms of helping you understand how you can receive the maximum benefit of the occupant restraint systems this vehicle provides, Section 1–3 of this Owner’s Manual is the most important Section for you and your family to read.

Section 1–3 describes the function and operation concerning seats, seat belts, SRS airbags and child restraint systems of this vehicle and some potential hazards you should be aware of. These systems work together along with the overall structure of this vehicle in order to provide occupant restraint in the event of a crash. The effect of each system is enhanced when it is used properly and together with other systems. No single occupant restraint system can, by itself, provide you or your family with the equal level of restraint which these systems can provide when used together. That is why it is important for you and your family to understand the purpose and proper use of each of these systems and how they relate to each other.

The purpose of all occupant restraint systems is to help reduce the possibility of death or serious injury in the event of a collision. None of these systems, either individually or together, can ensure that there is no injury in the event of collision. However, the more you know about these systems and how to use them properly, the greater your chances become of surviving an accident without death or serious injury.

Seat belts provide the primary restraint to all occupants of the vehicle, and every occupant of the vehicle should wear seat belts properly at all times. Children should always be secured in child restraint systems that are appropriate for their age and size. SRS (Supplemental Restraint System) airbags are, as their names imply, designed to work with, and supplement the seat, seat belts and are not substitutes for them. SRS airbags can be very effective in reducing the risk of head and chest injuries by reducing the chance of contact by the head and chest with interior portions of the vehicle.

In order to be effective, the SRS airbags must deploy with tremendous speed. The rapid deployment of the SRS airbags makes the SRS airbags themselves potential sources of death or serious injury if an occupant is too close to an airbag, or if an object or some part of his or her body has been placed between the occupant and the airbag at the time of deployment. This is just one example of how the instructions in Section 1–3 of this Owner’s Manual will help ensure proper use of the occupant restraint systems, and increase the safety they can provide to you and your family in the event of an accident.

Toyota recommends you to read the provisions in Section 1–3 carefully and refer to them as needed during your time of ownership of this vehicle.

Event data recorder

Your vehicle has computers that monitor and control certain aspects of your vehicle. These computers assist in driving and maintaining optimal vehicle performance. Besides storing data useful for troubleshooting, there is a system to record data in a crash or a near car crash event. This is called an Event Data Recorder (EDR).

The SRS airbag sensor assembly contains the EDR. In a crash or a near car crash event, this device may record some or all of the following information:

- Engine speed
- Whether the brake pedal was applied or not
- Vehicle speed
- To what extent the accelerator pedal was depressed
- Position of the transmission selector lever
- Whether the driver and front passenger wore the seat belts or not
- Driver’s seat position
- Front passenger’s occupant classification

- SRS airbag deployment data
- SRS airbag system diagnostic data

The information above is intended to be used for the purpose of improving vehicle safety performance. Unlike general data recorders, the EDR does not record sound data such as conversation between passengers.

Toyota will not disclose the data recorded in an EDR to a third party except when:

- An agreement from the vehicle’s owner (or the leasing company for a leased vehicle) is obtained
- Officially requested by the police or other authorities
- Used as a defense for Toyota in a law suit
- Ordered by the court

However, if necessary Toyota will:

- Use the data for research on Toyota vehicle safety performance
- Disclose the data to a third party for research purposes without disclosing details of the vehicle owner, and only when it is deemed necessary
- Disclose summarized data cleared of vehicle identification information to a non–Toyota organization for research purposes

New vehicle warranty

Your new vehicle is covered by the following Toyota limited warranties:

- New vehicle warranty
- Emission control systems warranty
- Others

For further information, please refer to the “Owner’s Warranty Information Booklet” or “Owner’s Manual Supplement”.

Your responsibility for maintenance

It is the owner’s responsibility to make sure that the specified maintenance is performed. Section 6 gives details of these maintenance requirements. Also included in Section 6 is general maintenance. For scheduled maintenance information, please refer to the “Scheduled Maintenance Guide” or “Owner’s Manual Supplement”.

Important health and safety information about your Toyota

⚠ CAUTION

- **WARNING: Engine exhaust, some of its constituents, and a wide variety of automobile components contain or emit chemicals known to the State of California to cause cancer and birth defects and other reproductive harm. In addition, oils, fuels and fluids contained in vehicles as well as waste produced by component wear contain or emit chemicals known to the State of California to cause cancer and birth defects or other reproductive harm.**
- **Battery posts, terminals and related accessories contain lead and lead compounds. Wash your hands after handling. Used engine oil contains chemicals that have caused cancer in laboratory animals. Always protect your skin by washing thoroughly with soap and water.**

Accessories, spare parts and modification of your Toyota

A wide variety of non–genuine spare parts and accessories for Toyota vehicles are currently available in the market. You should know that Toyota does not warrant these products and is not responsible for their performance, repair, or replacement, or for any damage they may cause to, or adverse effect they may have on, your Toyota vehicle.

This vehicle should not be modified with non–genuine Toyota products. Modification with non–genuine Toyota products could affect its performance, safety or durability, and may even violate governmental regulations. In addition, damage or performance problems resulting from the modification may not be covered under warranty.

Spark ignition system of your Toyota

The spark ignition system in your Toyota meets all requirements of the Canadian Interference–Causing Equipment Standard.

Installation of a mobile two–way radio system

As the installation of a mobile two–way radio system in your vehicle could affect electronic systems such as multiport fuel injection system/sequential multiport fuel injection system, electronic throttle control system, cruise control system, anti–lock brake system, traction control system, vehicle stability control system, SRS airbag system and seat belt pretensioner system, be sure to check with your Toyota dealer for precautionary measures or special instructions regarding installation.

Tires and loading on your Toyota

Underinflated or overinflated tire pressure and the excess load may result in the deterioration of steering ability and braking ability, leading to an accident. Check the tire inflation pressure periodically and be sure to keep the load limits given in this Owner’s Manual. For details about tire inflation pressure and load limits, see pages 284 and 349.

Leak detection pump

This pump performs fuel evaporation leakage check. This check is done approximately five hours after the engine is turned off. So you may hear sound coming from underneath the luggage compartment for several minutes. It does not indicate a malfunction.

Scrapping of your Toyota

The SRS airbag and seat belt pretensioner devices in your Toyota contain explosive chemicals. If the vehicle is scrapped with the airbags and pretensioners left as they are, this may cause an accident such as fire. Be sure to have the systems of the SRS airbag and seat belt pretensioner removed and disposed of by the qualified service shop or by your Toyota dealer before you dispose of your vehicle.

Perchlorate Material

Special handling may apply,
See www.dtsc.ca.gov/hazardouswaste/perchlorate.

Your vehicle has components that may contain perchlorate. These components may include airbag, seat belt pretensioners, and wireless remote control batteries.

SECTION 1 – 1

OPERATION OF INSTRUMENTS AND CONTROLS

Overview of instruments and controls

Instrument panel overview 2
Instrument cluster overview 7
Indicator symbols on the instrument panel 8

Instrument panel overview

▶View A (coupe)

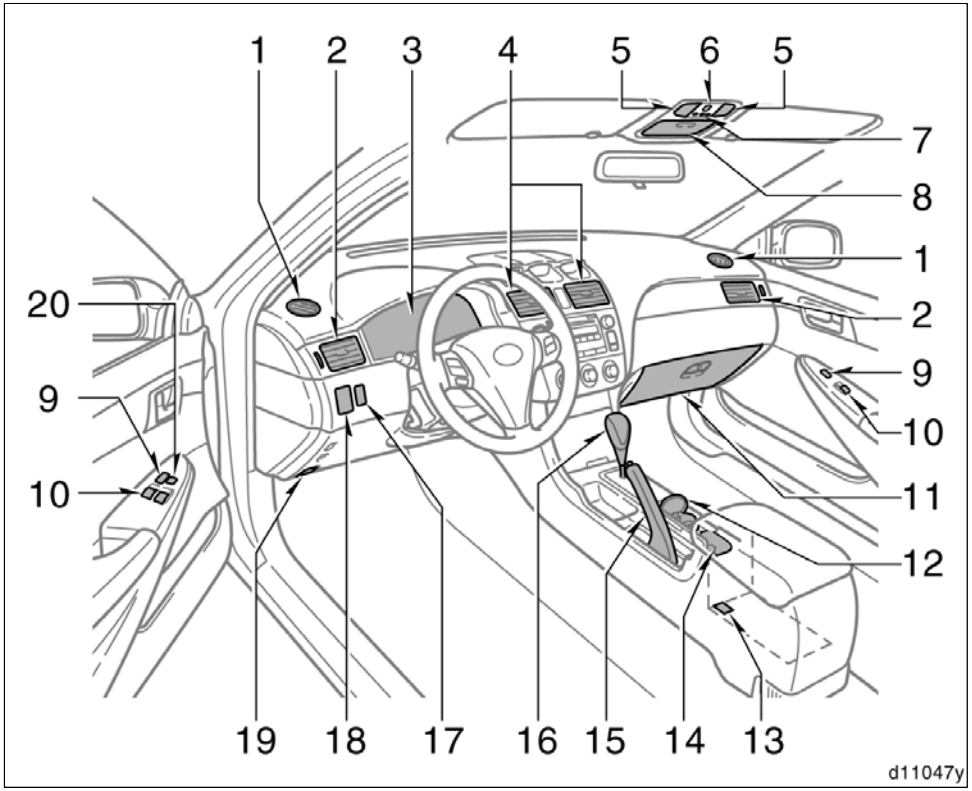

1. Side defroster outlets
2. Side vents
3. Instrument cluster
4. Center vents
5. Personal lights
6. Electric moon roof switch
7. Garage door opener
8. Auxiliary box
9. Power door lock switches
10. Power window switches
11. Glove box
12. Portable ashtray
13. Power outlet
14. Cup holder
15. Parking brake lever
16. Automatic transmission selector lever or manual transmission gear shift lever
17. Headlight beam level control dial
18. Power rear view mirror control switches
19. Hood lock release lever
20. Window lock switch

▶View A (convertible)

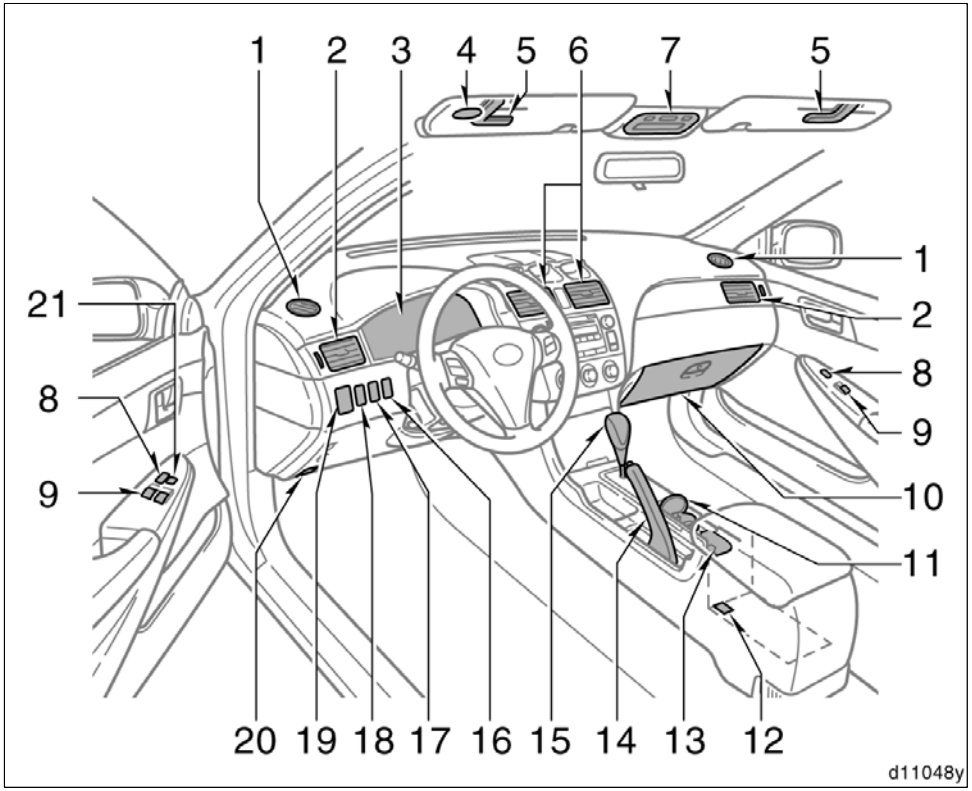

1. Side defroster outlets
2. Side vents
3. Instrument cluster
4. Garage door opener
5. Convertible top latch handles
6. Center vents
7. Personal lights
8. Power door lock switches
9. Power window switches
10. Glove box
11. Portable ashtray
12. Power outlet
13. Cup holder
14. Parking brake lever
15. Automatic transmission selector lever
16. Headlight beam level control dial
17. All window control switch
18. Convertible top control switch
19. Power rear view mirror control switches
20. Hood lock release lever
21. Window lock switch

▶View B (with manual air conditioning controls)

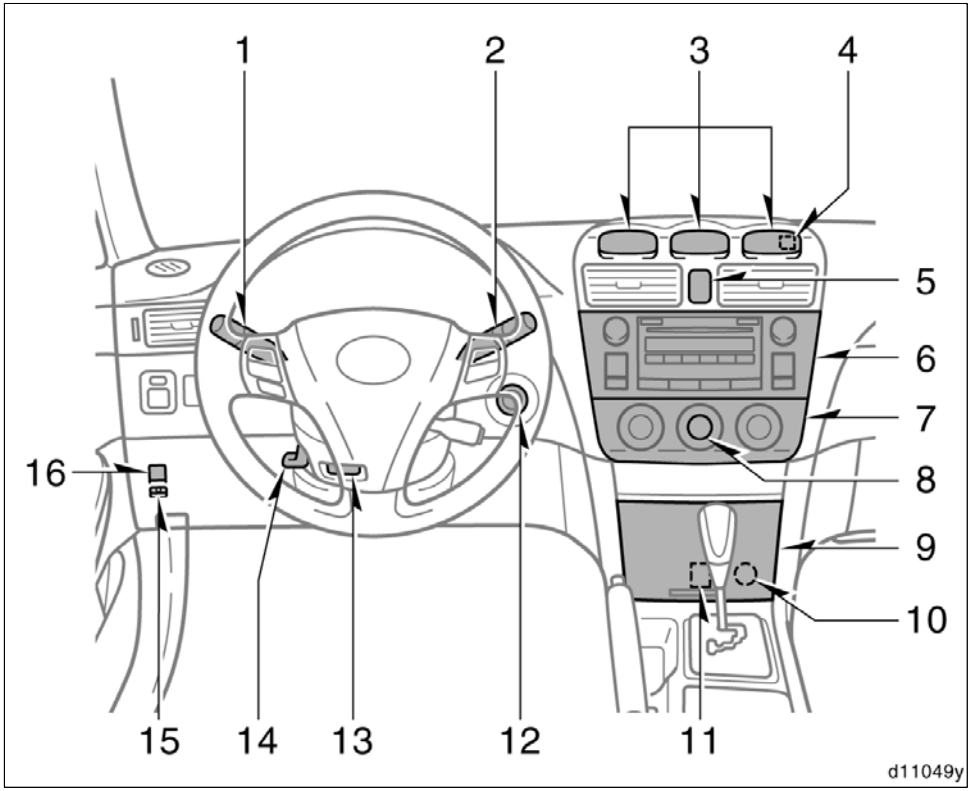

1. Headlight, turn signal and front fog light switches
2. Wiper and washer switches
3. Multi–information displays
4. Front passenger’s occupant classification indicator light/front passenger’s seat belt reminder light
5. Emergency flasher switch
6. Audio system or navigation system including audio system (For the navigation system, see the separate “Navigation System Owner’s Manual”.)
7. Air conditioning controls
8. Rear window defogger switch
9. Auxiliary box
10. Power outlet
11. AUX adapter
12. Engine switch
13. Tilt steering lock release lever
14. Telescopic steering lock release lever
15. Tire pressure warning system reset switch
16. “TRAC OFF” (traction control system off) switch

▶View B (with automatic air conditioning controls)

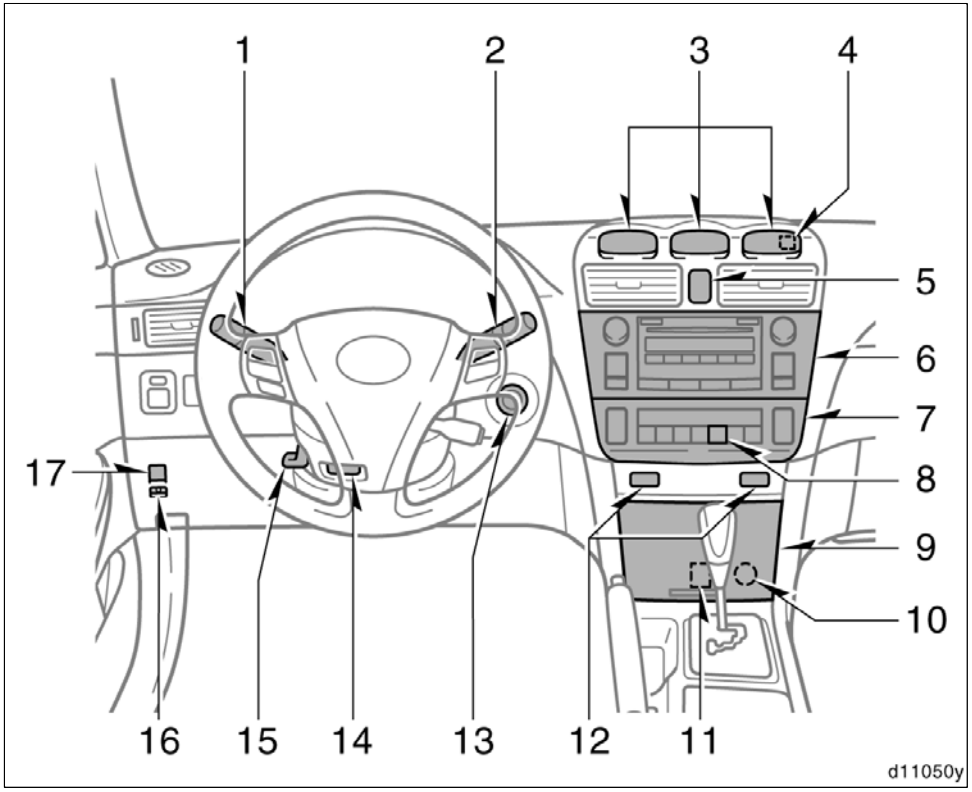

1. Headlight, turn signal and front fog light switches
2. Wiper and washer switches
3. Multi–information displays
4. Front passenger’s occupant classification indicator light/front passenger’s seat belt reminder light
5. Emergency flasher switch
6. Audio system or navigation system including audio system (For the navigation system, see the separate “Navigation System Owner’s Manual”.)
7. Air conditioning controls
8. Rear window and outside rear view mirror defogger switch
9. Auxiliary box
10. Power outlet
11. AUX adapter
12. Seat heater switches
13. Engine switch
14. Tilt steering lock release lever
15. Telescopic steering lock release lever
16. Tire pressure warning system reset switch
17. “TRAC OFF” (traction control system off) switch

Steering switches overview

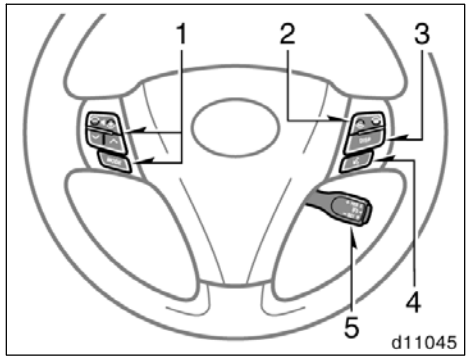

1. Audio remote control switches
2. Telephone switch
3. Multi–information display control switch
4. Speech command switch
5. Cruise control switch

Instrument cluster overview

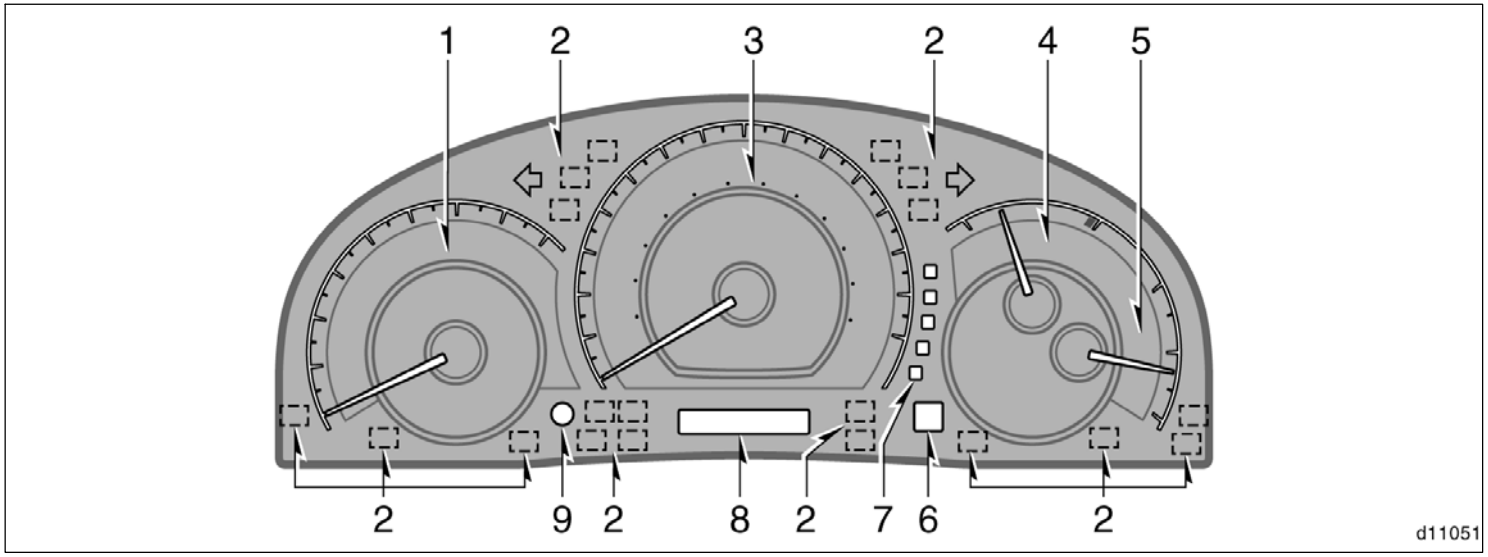

1. Tachometer
2. Service reminder indicators and indicator lights
3. Speedometer
4. Engine coolant temperature gauge
5. Fuel gauge
6. Automatic transmission shift range position display
7. Automatic transmission shift position indicator lights
8. Odometer and two trip meters
9. Trip meter reset knob/instrument panel light control knob

Indicator symbols on the instrument panel

BRAKE or	Brake system warning light*1
	Driver’s seat belt reminder light*1
PASSENGER	Front passenger’s seat belt reminder light*1
	Charging system warning light*1
CHECK	Malfunction indicator lamp*1
	Low engine oil pressure warning light*1
	Low fuel level warning light*1

ABS or	Anti–lock brake system warning light*1
	Open door warning light*1
	SRS warning light*1
	Tire pressure warning light*1
	Low windshield washer fluid level warning light*1
VSC	Vehicle stability control system/traction control system warning light*1
MAINT	Engine oil replacement reminder light*1
	Engine immobilizer/theft deterrent system indicator light

PASSENGER AIR BAG OFF ON	Front passenger occupant classification indicator light
	Headlight indicator light
	Tail light indicator light
	Turn signal indicator lights
	Headlight high beam indicator light
	Slip indicator light
TRAC OFF	Traction control system off indicator light
CRUISE	Cruise control indicator light*2

*1: For details, see “Service reminder indicators and warning buzzers” on page 133 in Section 1–6.

*2: If this light flashes, see “Cruise control” on page 163 in Section 1–7.

SECTION 1 – 2

OPERATION OF INSTRUMENTS AND CONTROLS

Keys and Doors

Keys 12
Engine immobilizer system 14
Wireless remote control 16
Side doors 21
Power windows 24
Trunk lid 28
Hood 30
Theft deterrent system 30
Fuel tank cap 32
Electric moon roof 34
Convertible top 36

Keys

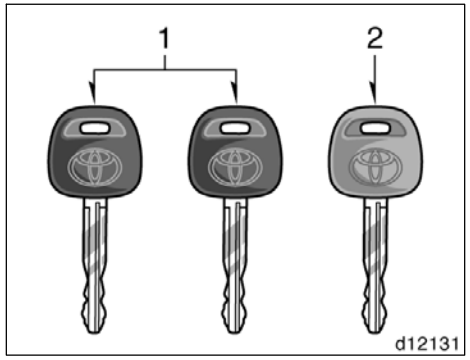

Your vehicle is supplied with two kinds of keys.

1. Master keys (black)—

   These keys work in every lock. Your Toyota dealer will need one of them to make a new key with a built–in transponder chip.

   Since the doors can be locked without a key, you should always carry a spare master key in case you accidentally lock your keys inside the vehicle.

2. Sub key (gray)—

   This key will not work in the trunk lid lock release lever and glove box.

   To protect items locked in the trunk or glove box when using valet parking, leave the sub key with the attendant.

A transponder chip for engine immobilizer system has been placed in the head of the master and sub keys. These chips are needed to enable the system to function correctly, so be careful not to lose these keys. If you make your own duplicate key, you will not be able to cancel the system or start the engine.

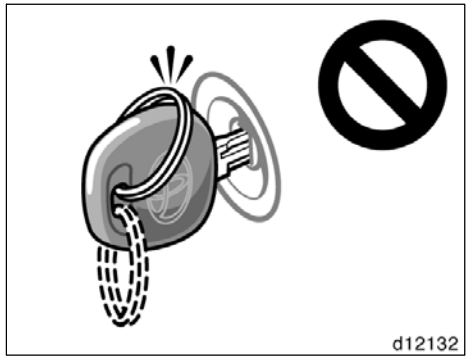

NOTICE

When using a key containing a transponder chip, observe the following precautions:

- ***When starting the engine, do not use the key with a key ring resting on the key grip and do not press the key ring against the key grip. Otherwise the engine may not start, or may stop soon after it starts.***

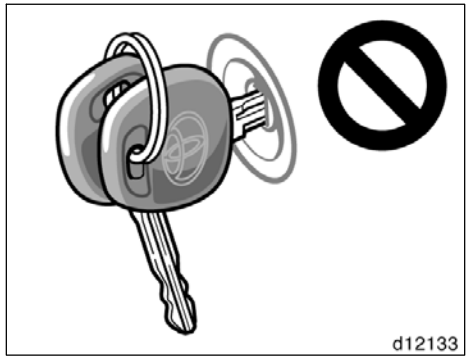

◆*When starting the engine, do not use the key with other transponder keys around (including keys of other vehicles) and do not press other key plates against the key grip. Otherwise the engine may not start, or may stop soon after it starts. If this happens, remove the key once and then insert it again after removing other transponder keys (including keys of other vehicles) from the ring or while gripping or covering them with your hand to start the engine.*

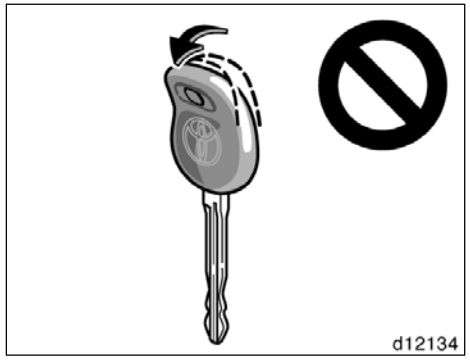

◆*Do not bend the key grip.*

◆*Do not cover the key grip with any material that cuts off electromagnetic waves.*

◆*Do not knock the key hard against other objects.*

◆*Do not leave the key exposed to high temperatures for a long period, such as on the dashboard and hood under direct sunlight.*

◆*Do not put the key in water or wash it in an ultrasonic washer.*

◆*Do not use the key with electromagnetic materials.*

Engine immobilizer system

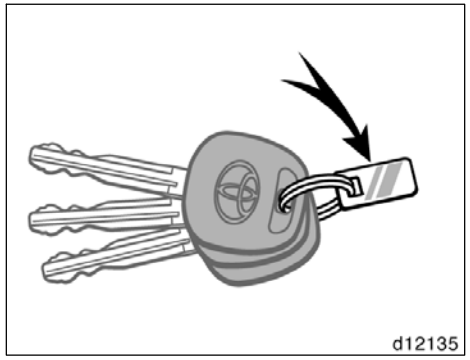

KEY NUMBER PLATE

Your key number is shown on the plate. Keep the plate in a safe place such as your wallet, not in the vehicle.

If you should lose your keys or if you need additional keys, duplicates can be made by a Toyota dealer using the key number.

We recommend writing down the key number and storing it in a safe place.

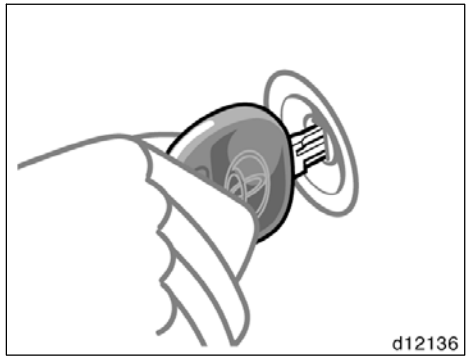

The engine immobilizer system is a theft deterrent system. When you insert the key in the engine switch, the transponder chip in the key’s head transmits an electronic code to the vehicle. The engine will start only when the electronic code in the chip corresponds to the registered ID code for the vehicle.

Never leave the keys inside the vehicle when you leave the vehicle.

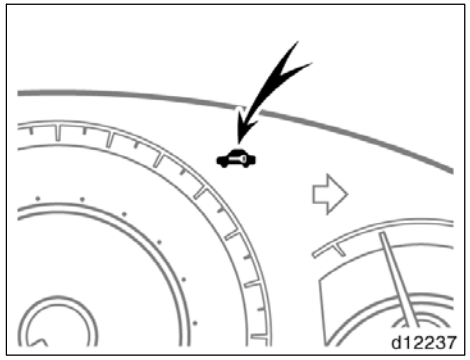

The system is automatically set when the key is removed from the engine switch. The indicator light will start flashing to show the system is set.

If any of the following indicator conditions occurs, contact your Toyota dealer.

- The indicator light stays on except when the theft deterrent system is setting or activating. (See “Theft deterrent system” on page 30 in this Section.)
- The indicator light does not start flashing when the key is removed from the engine switch.
- The indicator light flashes inconsistently.

Inserting the registered key in the engine switch automatically cancels the system, which enables the engine to start. The indicator light will go off.

The system is maintenance–free.

For your Toyota dealer to make you a new key with built–in transponder chip, your dealer will need your key number and master key. However, there is a limit to the number of additional keys your Toyota dealer can make for you.

If you make your own duplicate key, you will not be able to cancel the system or start the engine.

NOTICE

Do not modify, remove or disassemble the engine immobilizer system. If any unauthorized changes or modifications are made, proper operation of the system cannot be guaranteed.

For vehicles sold in U.S.A.

FCC ID: MOZRI–21BTY

This device complies with Part 15 of the FCC Rules. Operation is subject to the following two conditions:

(1) This device may not cause harmful interference, and (2) this device must accept any interference received, including interference that may cause undesired operation.

CAUTION

Changes or modifications not expressly approved by the party responsible for compliance could void the user’s authority to operate the equipment.

For vehicles sold in Canada

This device complies with RSS–210 of Industry Canada. Operation is subject to the following two conditions:

(1) This device may not cause interference, and (2) this device must accept any interference, including interference that may cause undesired operation of the device.

Wireless remote control—

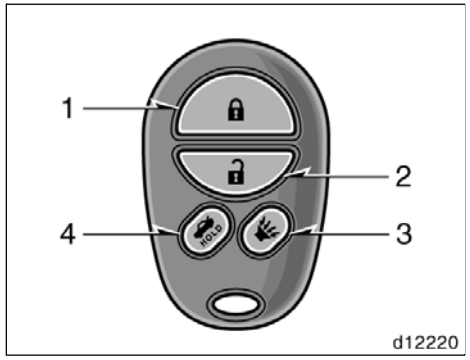

1. Lock switch
2. Unlock switch
3. Alarm switch
4. Trunk lid open switch

The wireless remote control system is designed to lock or unlock both doors, open the trunk lid or activate the alarm from a distance within approximately 1 m (3 ft.) of the vehicle.

When you operate any switch, push it slowly and securely.

The wireless remote control transmitter is an electronic component. Observe the following instructions in order not to cause damage to the transmitter.

- Do not leave the transmitter in places where the temperature becomes high such as on the dashboard.
- Do not disassemble it.
- Avoid knocking it hard against other objects or dropping it.
- Avoid putting it in water.

You can use up to 4 wireless remote control transmitters for the same vehicle. Contact your Toyota dealer for detailed information.

If the wireless remote control transmitter does not actuate the doors or alarm, or operate from a normal distance:

- Check for closeness to a radio transmitter such as a radio station or an airport which can interfere with normal operation of the transmitter.
- The battery may have been consumed. Check the battery in the transmitter. To replace the battery, see “—Replacing battery” on page 19.

If you lose your transmitter, contact your Toyota dealer as soon as possible to avoid the possibility of theft, or an accident. (See “If you lose your wireless remote control transmitter” on page 320 in Section 4.)

This complies with Part 15 of the FCC rules. Operation is subject to the following two conditions:

(1) This device may not cause harmful interference, and (2) this device must accept any interference received, including interference that may cause undesired operation.

—Locking and unlocking doors

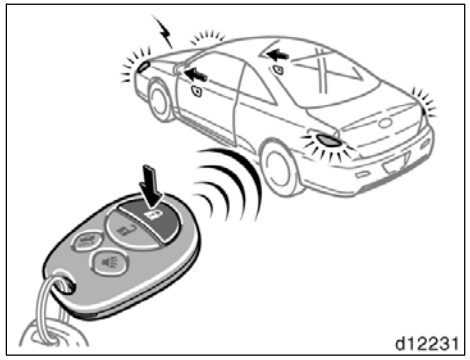

Locking operation

Unlocking operation

To lock and unlock both doors, push the switches of the transmitter slowly and securely.

To lock: Push the lock switch. Both doors are locked simultaneously. At this time one beep will be heard, and the turn signal lights will flash once.

Check to see that the doors are securely locked.

If either door is not securely closed, locking cannot be performed by the lock switch and a beep will sound continuously for 10 seconds. However, if the key is in the ignition, a beep will not sound.

To stop the beep, close both doors securely or push the unlock switch.

To unlock: Push the unlock switch once to unlock the driver’s door alone. Pushing the switch twice within 3 seconds unlocks passenger’s door simultaneously. Each time the unlock switch is pushed, two beeps will be heard, and the turn signal lights will flash twice.

Coupe—When unlocking a door when both doors are locked, the interior light and engine switch light come on. The lights remain on for about 15 seconds unless either door is opened and closed. (For further information, see “Interior light” on page 123 and “Engine (ignition) switch light and quarter trim courtesy light” on page 124 in Section 1–5.)

Convertible—When unlocking a door when both doors are locked, the engine switch light, quarter trim courtesy light and personal lights come on. The lights remain on for about 15 seconds unless either door is opened and closed. (For further information, see “Engine (ignition) switch light and quarter trim courtesy light” on page 124 and “Personal lights” on page 125 in Section 1–5.)

You have 60 seconds to open a door after using the wireless remote unlock feature. If a door is not opened by then, both doors will be automatically locked again and one beep will be heard.

If the lock or unlock switch is kept pushed in, the locking or unlocking operation is not repeated. Release the switch and then push again.

—Opening trunk lid

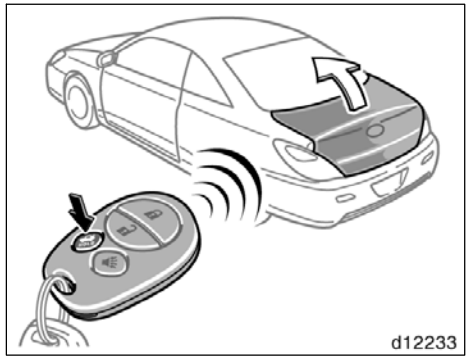

To open the trunk lid, push the switch of the transmitter for 1 second.

If the key is in the ignition, the trunk lid cannot be opened by the trunk lid open switch.

—Activating alarm

Pushing the switch blows the horn intermittently and flashes the headlights, tail lights, turn signal lights, and interior light (coupe) or personal lights (convertible).

The alarm switch is used to deter vehicle theft when you witness anyone attempting to break into or damage your vehicle.

The alarm will last for one minute. To stop alarm midway, push the switch once again, unlock a door with transmitter, or turn the engine switch from the “LOCK” to “ON” position.

The alarm does not work when the engine switch is in the “ON” position.

—Switching beep sound

You can switch the beep on and off. (The beep is on initially and after battery replacement.)

To switch the beep on and off:

With the driver’s door opened—

1. Insert the ignition key and remove it.
2. Within 5 seconds, insert the engine switch again and turn it to the “ON” position.
3. After 10 seconds, push any switch on the transmitter twice within 10 seconds. Two beep sounds inform you that the program has been switched on or off.

If this procedure is not followed exactly, the beep will not operate as expected.

Check the beep ON/OFF operation by pushing the transmitter switch after you finish this procedure. If the beep does not operate as expected, repeat this procedure from step 1.

—Replacing battery

For replacement, use a CR2032 lithium battery or equivalent.

⚠ CAUTION

Special care should be taken to prevent small children from swallowing the removed transmitter battery or components.

NOTICE

- ***When replacing the transmitter battery, be careful not to lose the components.***
- ***Replace only with the same or equivalent type recommended by a Toyota dealer.***
- ***Dispose of used batteries according to the local laws.***

Replace the transmitter battery by following these procedures:

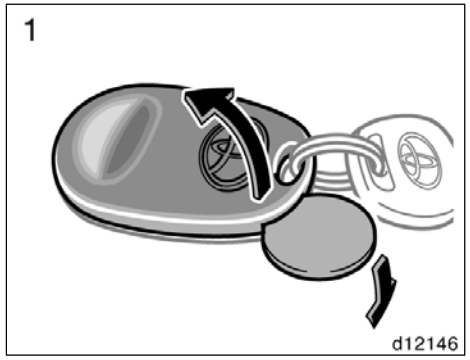

1. Using a coin or equivalent, open the transmitter case.

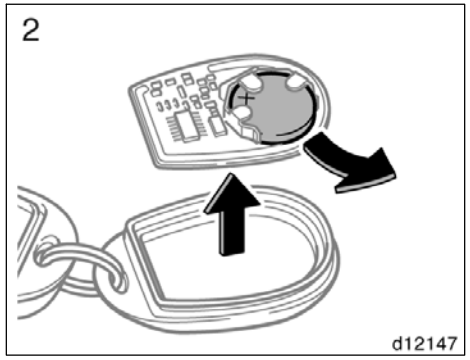

2. Remove the circuit board, then remove the discharged transmitter battery.

NOTICE

- ***Take care not to damage the circuit board.***
- ***Do not bend the terminals.***

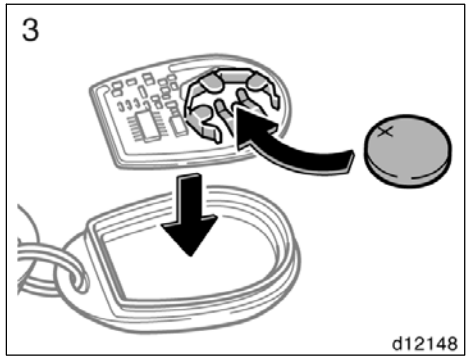

3. Put in a new transmitter battery with positive (+) side up. Install the circuit board into the transmitter case.

Close the transmitter case securely.

NOTICE

- ***Make sure the positive side and negative side of the transmitter battery are faced correctly.***
- ***Do not replace the battery with wet hands. Water may cause unexpected rust.***
- ***Do not touch or move any components inside the transmitter, or it may interfere with proper operation.***
- ***Be careful not to bend the electrode when inserting the transmitter battery and that dust or oils do not adhere to the transmitter case.***
- ***Close the transmitter case securely.***

After replacing the battery, check that the transmitter operates properly. If the transmitter still does not operate properly, contact your Toyota dealer.

Side doors—

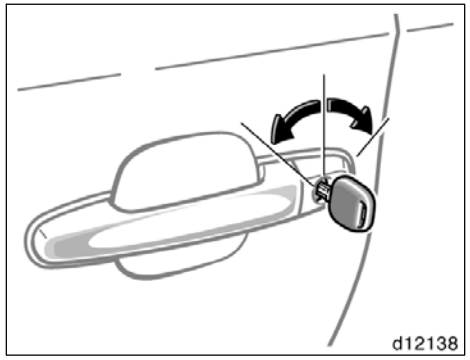

LOCKING AND UNLOCKING WITH KEY

Insert the key into the keyhole and turn it.

To lock: Turn the key forward.
To unlock: Turn the key backward.

Passenger’s door locks simultaneously with the driver’s door. Turning the key once will unlock the driver’s door and twice in succession will unlock passenger’s door.

Coupe—When unlocking a door when both doors are locked, the interior light and engine switch light will come on and remain on for about 15 seconds before fading out. (For further information, see “Interior light” on page 123 and “Engine (ignition) switch light and quarter trim courtesy light” on page 124 in Section 1–5.)

Convertible—When unlocking a door when both doors are locked, the engine switch light, quarter trim courtesy light and personal lights will come on and remain on for about 15 seconds before fading out. (For further information, see “Engine (ignition) switch light and quarter trim courtesy light” on page 124 and “Personal lights” on page 125 in Section 1–5.)

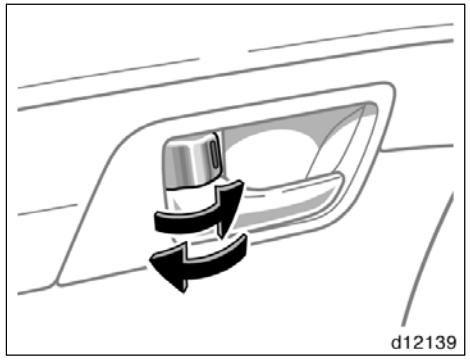

LOCKING AND UNLOCKING WITH INSIDE LOCK KNOB

Move the lock knob.

To lock: Push the knob forward.
To unlock: Pull the knob backward.

The doors can be opened by pulling the inside handle even if the lock knobs are in the locked position.

⚠ CAUTION

Do not pull the inside handle of the doors while driving. The doors will open and an accident may occur. Toyota strongly recommends that all children be placed in the rear seat of the vehicle.

Closing the door with the lock knob in the lock position will also lock the door. Be careful not to lock your keys in the vehicle.

The door cannot be locked when either door is open and the key is in the ignition.

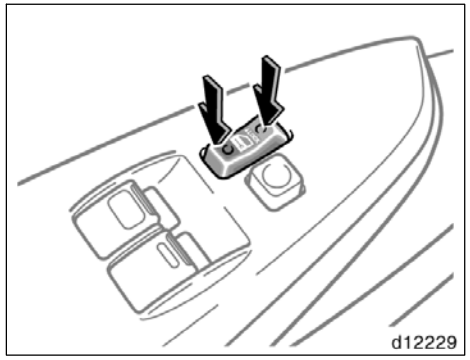

Driver’s side

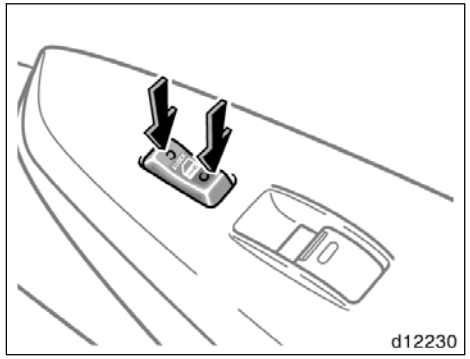

Passenger’s side

LOCKING AND UNLOCKING WITH POWER DOOR LOCK SWITCH

Push the switch.

To lock: Push the switch down on the front side.
To unlock: Push the switch down on the rear side.

Operating the switch simultaneously locks or unlocks both doors.

If you do either of the following, no door can be unlocked with the power door lock switch.

- Lock both doors with the key or wireless remote control transmitter when both doors are closed.
- Open the driver’s door or passenger’s door and move the inside lock knobs of both doors to the lock position, then close the doors.

The power door lock switch can be reset in the following ways.

- Turn the engine switch to “ON”.
- Unlock both doors with the key or wireless remote control transmitter.
- Unlock the driver’s door or passenger’s door with the inside lock knob, and then unlock both doors with the power door lock switch.

⚠ CAUTION

Before driving, be sure that the doors are closed and locked, especially when small children are in the vehicle. Along with the proper use of seat belts, locking the doors helps prevent the driver and passengers from being thrown out from the vehicle in an accident. It also helps prevent the doors from being opened unintentionally.

—Automatic door locking and unlocking functions

AUTOMATIC DOOR LOCKING

You can set or cancel the following automatic door locking function:

- **Locking linked with the shift position (vehicles with automatic transmission only)**

  All doors are automatically locked when the selector lever is moved out of “P” position.

Be sure to apply the parking brake when performing the following operations.

To set the locking linked with the shift position:

1. Close all doors and turn the engine switch to the “ON” position.
2. Shift the selector lever to the “P” position.
3. Within 10 seconds of turning the engine switch to the “ON” position, press and hold the driver’s side power door lock switch in the lock position for 5 seconds and then release.

   The doors will be locked and unlocked to indicate that the function is set.

To cancel the function, do the above operation again.

AUTOMATIC DOOR UNLOCKING

You can select the following functions:

- **Unlocking linked with the shift position (vehicles with automatic transmission only)**

  All doors are automatically unlocked when the selector lever is moved to “P” position.

- **Unlocking linked with the driver’s door**

  All doors are automatically unlocked when the driver’s door is opened within 10 seconds after the engine switch is turned to the “ACC” or “LOCK” position, or the key is removed.

You can set or cancel the automatic door unlocking functions:

Be sure to apply the parking brake when performing the following operations.

To select the unlocking linked with the shift position:

1. Close all doors and turn the engine switch to the “ON” position.
2. Shift the selector lever to the “P” position.
3. Within 10 seconds of turning the engine switch to the “ON” position, press and hold the driver’s side power door lock switch in the unlock position for 5 seconds and then release.

   The doors will be locked and unlocked to indicate that the function is set.

To cancel the function, do the above operation again.

To select the unlocking linked with the driver’s door:

1. Close all doors and turn the engine switch to the “ON” position.
2. Automatic transmission models only— Shift the selector lever from “P” to the “N” position.
3. Within 10 seconds of turning the engine switch to the “ON” position, press and hold the driver’s side power door lock switch in the unlock position for 5 seconds and then release.

   The doors will be locked and unlocked to indicate that the function is set.

To cancel the function, do the above operation again.

Power windows

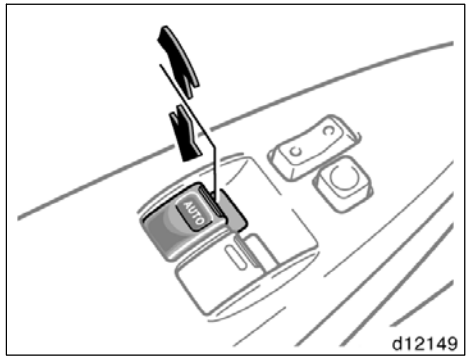

The windows can be operated with the switch on each door.

The power windows work when the engine switch is in the “ON” position.

Key off operation: Both windows work for about 43 seconds even after the engine switch is turned off. They stop working when either door is opened.

OPERATING THE DRIVER’S WINDOW

Use the switch on the driver’s door.

Normal operation: The window moves as long as you hold the switch.

To open: Lightly push down the switch.
To close: Lightly pull up the switch.

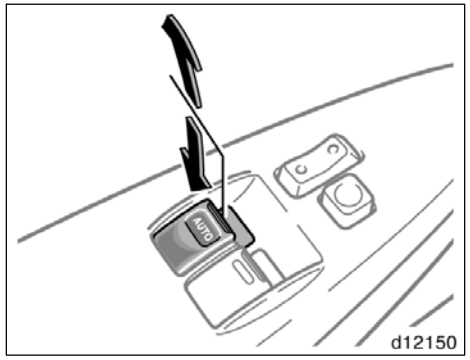

Coupe

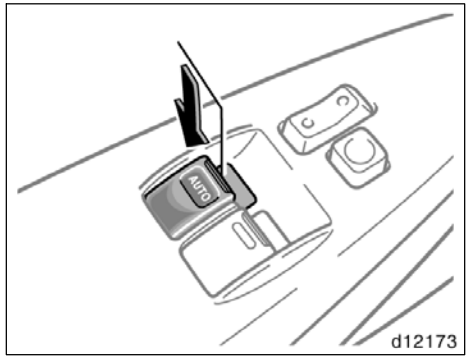

Convertible

Automatic operation:

Coupe—Push the switch completely down or pull it completely up, and then release it. The window will fully open or close. To stop the window partway, lightly move the switch in the opposite direction and then release it.

Convertible—Push the switch completely down and then release it. The window will fully open. To stop the window partway, lightly pull the switch up and then release it.

Jam protection function (coupe):

During automatic closing operation or key off closing operation, the window stops and opens half way if something gets caught between the window and body.

If the window receives a strong impact, this function may work even if nothing is caught.

⚠ CAUTION

- **Never try jamming any part of your body to activate the jam protection function intentionally, as it could result in a death or serious injury.**
- **The jam protection function may not work if something gets caught just before the window is fully closed.**

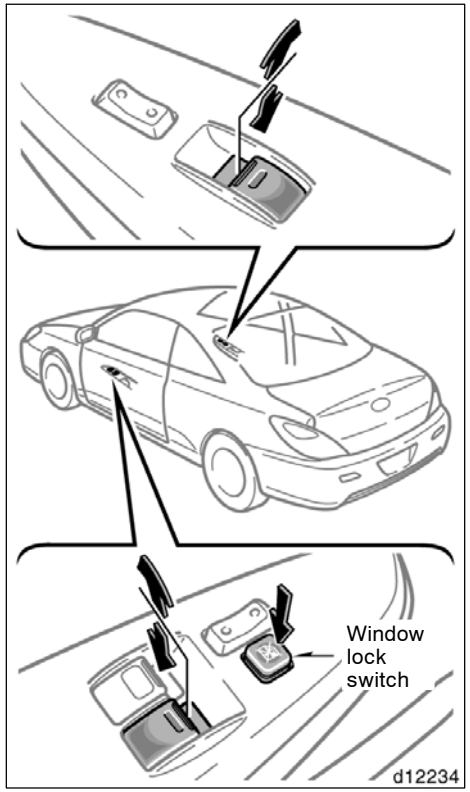

OPERATING THE PASSENGER’S WINDOW

Use the switch on the passenger’s door. The driver’s door also has a switch that controls the passenger’s window.

The window moves as long as you hold the switch.

To open: Push down the switch.
To close: Pull up the switch.

If you push in the window lock switch on the driver’s door, the passenger’s window cannot be operated.

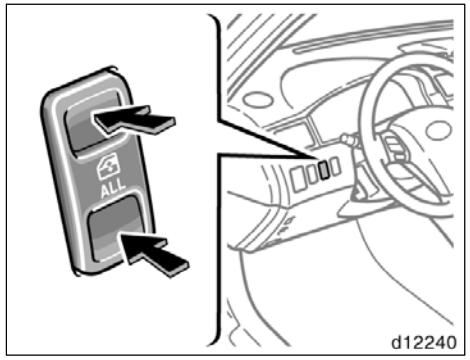

OPERATING THE ALL WINDOW CONTROL SWITCH (convertible)

Both side windows and quarter windows can be operated simultaneously with the all window control switch.

The windows move as long as you hold the switch.

To open: Push on the lower side of the switch
To close: Push on the upper side of the switch. The side windows will open slightly before closing if they are not fully opened.

If the side windows stop partway, release the switch and push it again after a moment, or operate the side power window switches on the doors.

INITIALIZATION OF THE DRIVER’S POWER WINDOW (coupe)

If the driver’s power window does not operate automatically or the jam protection function does not operate correctly, you should normalize the power window.

To initialize the power window

1. Push down the power window switch and lower the window halfway.
2. Pull up the switch until the window closes and hold the switch for at least one second.

Make sure that the window opens and closes automatically. If the power window cannot be operated properly, have it checked by your Toyota dealer.

⚠ CAUTION

To avoid death or serious personal injury, you must do the following.

- **Before you close the power windows, always make sure there is nobody around the power windows. You must also make sure the heads, hands and other parts of the bodies of all occupants are kept completely inside the vehicle. If someone’s neck, head or hands get caught in a closing window, it could result in death or serious injury. When anyone closes the power windows, make sure he or she operates the windows safely.**
- **When small children are in the vehicle, never let them use the power window switches without supervision. Use the window lock switch to prevent them from making unexpected use of the switches.**
- **Be sure to remove the ignition key when you leave your vehicle.**
- **Never leave anyone (particularly a small child) alone in your vehicle, especially with the ignition key still inserted. Otherwise, he/she could use the power window switches and get trapped in a window. Unattended person (particularly a small child) can be involved in a serious accident.**

Trunk lid—

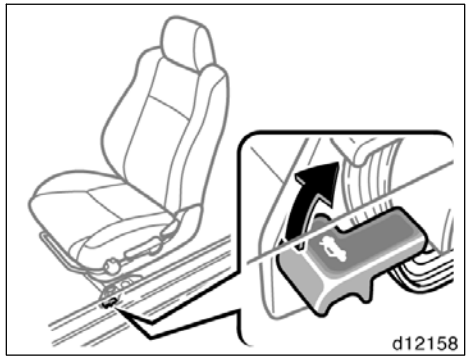

To open the trunk lid, pull up on the lock release lever.

See “—Stowage precautions” on page 285 in Section 2 for precautions when loading luggage.

To close the trunk lid, lower it and press down on it. After closing the trunk lid, try pulling it up to make sure it is securely closed.

To deactivate this lock release lever from opening the trunk lid, see “—Luggage security system” described below.

The trunk lid can be opened with the wireless remote control transmitter, see “—Opening trunk lid” on page 18 in this Section.

⚠ CAUTION

Keep the trunk lid closed while driving. This not only keeps the luggage from being thrown out but also prevents exhaust gases from entering the vehicle.

—Luggage security system

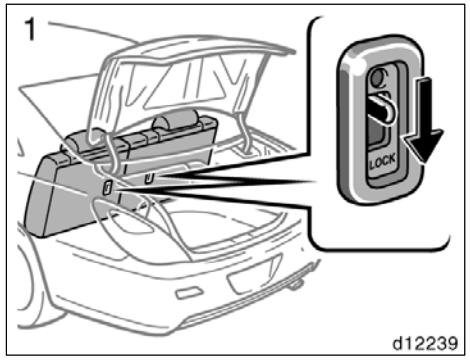

This system prevents someone (with the sub key) from gaining access to the trunk by folding down a rear seat or using the trunk lid lock release lever.

To protect valuables stored in the trunk, do the following procedure.

1. **Coupe—Open the trunk lid and push down the security lock levers to lock the rear seatbacks.**

After locking the rear seatbacks, try folding them down to make sure they are securely locked, otherwise someone could get into the trunk by folding down a rear seat.

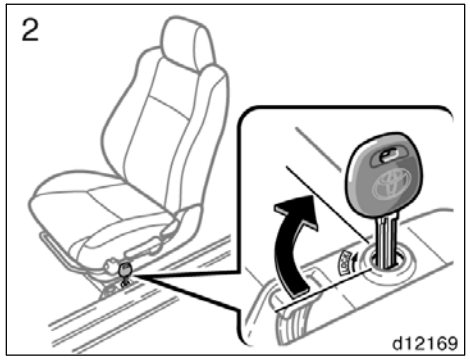

2. Close the trunk lid. Insert the master key into the keyhole and turn it to the “LOCK” direction to deactivate the trunk lid lock release lever.

After the operation, try pulling up the trunk lid lock release lever to make sure it is locked.

NOTICE
Implement the above steps to maximize security of the luggage in the trunk whenever the vehicle is unattended.

—Internal trunk release handle

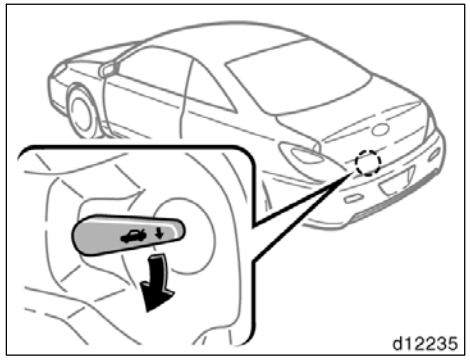

If a person is locked in the trunk, he/she can pull down the phosphorescent handle on the inside of trunk lid to open the trunk lid.

The phosphorescent (glow–in–the–dark) handle will continue to glow for a time after the trunk lid is closed. Exposing the handle to stronger light will cause it to glow longer.

⚠ CAUTION
• **Always lock the trunk lid and all doors, and keep away the vehicle keys out of children’s reach.** • **Never leave children unattended in the vehicle. Unsupervised children may lock themselves in the vehicle or trunk and suffer serious injuries or death.**

Hood

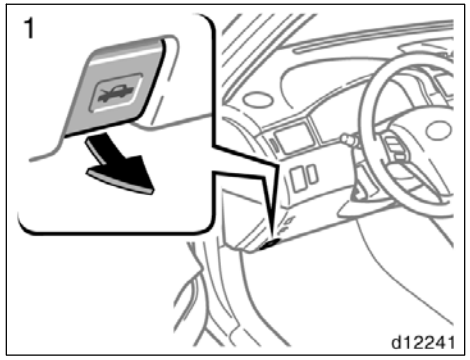

To open the hood:

1. **Pull the hood lock release lever. The hood will spring up slightly.**

⚠ CAUTION

Before driving, be sure that the hood is closed and securely locked. Otherwise, the hood may open unexpectedly while driving and an accident may occur.

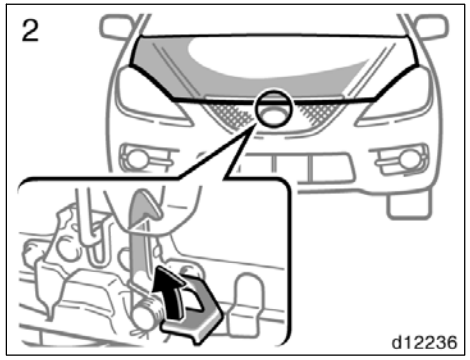

2. **In front of the vehicle, pull up the auxiliary catch lever and lift the hood.**

Before closing the hood, check to see that you have not forgotten any tools, rags, etc. Then lower the hood and make sure it locks into place. If necessary, press down gently on the front edge to lock it.

Theft deterrent system

The system sounds alarm and flashes lights when forcible entry is detected. The alarm is triggered if any of the doors, trunk or hood is forcibly unlocked or the battery terminal is disconnected and then reconnected while the vehicle is locked.

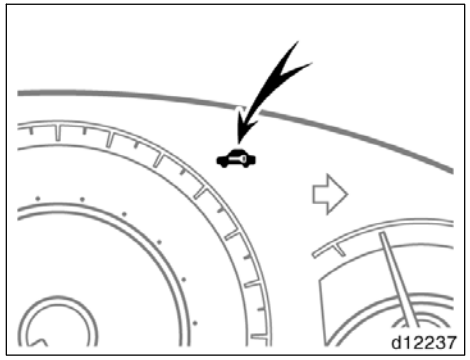

SETTING THE SYSTEM

1. Turn the engine switch to the “LOCK” position and remove the key.

The indicator light will start flashing when the key is removed from the engine switch. (See “Engine immobilizer system” on page 14 for details.)

2. Have all passengers get out of the vehicle.
3. Close and lock both doors, trunk and hood.

The indicator light will remain on when both doors, trunk and hood are closed and locked.

The system will automatically be set after 30 seconds. When the system is set, the indicator light will start flashing again.

4. After making sure the indicator light starts flashing, you may leave the vehicle.

Never leave anyone in the vehicle when you set the system, because unlocking from the inside will activate the system.

CANCELLING THE SYSTEM

The system will be cancelled by the following ways.

- Any of the doors are unlocked with the key or wireless remote control.
- The trunk is opened with the wireless remote control transmitter.
- Turn the engine switch to the “ON” position.

If the tail lights come on for 2 seconds, the theft deterrent system has been alarmed. Check to see if there is any abnormality with your vehicle.

WHEN THE SYSTEM IS SET

Activating the system

The system will sound the alarm under the following conditions:

- If any of the doors are forcibly unlocked or opened, or if the trunk or hood is forcibly opened without the key or wireless remote control transmitter
- If the battery terminal is disconnected and then reconnected
- If the ignition is hotwired

The indicator light will come on when the system is activated.

If any of the door is unlocked without the key or wireless remote control transmitter and the key is not in the engine switch, all the doors will be automatically locked again.

After one minute, the alarm will automatically stop and the indicator light will starts flashing again.

Reactivating the alarm

Once set, the system automatically resets the alarm after the alarm stops.

The alarm will activate again under the same circumstances described in “Activating the system”.

Stopping the alarm

The alarm will be stopped by the following three ways:

- Turn the engine switch from the “LOCK” to “ON” position.
- Unlock any of the doors with the key or wireless remote control transmitter.
- Open the trunk with the wireless remote control transmitter.

These ways cancel the system at the same time.

If the battery becomes discharged due to the vehicle being unused for a long time, etc., when the battery is recharged or replaced, the system will give the alarm. If this happens, immediately unlock any of the doors with the key or the wireless remote control transmitter, and the alarm will stop.

TESTING THE SYSTEM

1. Open both windows.
2. Set the system as described above. The doors should be locked with the key or wireless remote control transmitter. Be sure to wait until the indicator light goes off or starts flashing.
3. Unlock any door from the inside. The system should activate the alarm.
4. Stop the alarm as described above.
5. Repeat this operation for the other doors, trunk and hood. When testing the hood, also check that the system is activated when the battery terminal is disconnected and then reconnected.

If the system does not work properly, have it checked by your Toyota dealer.

Fuel tank cap

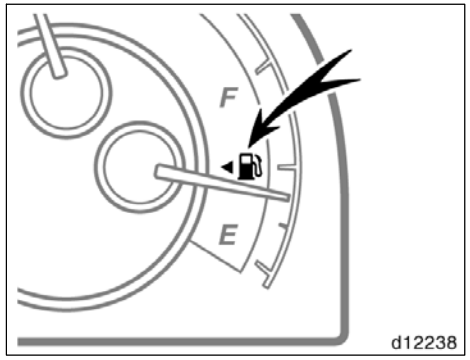

This indicates that the fuel filler door is on the left side of your vehicle.

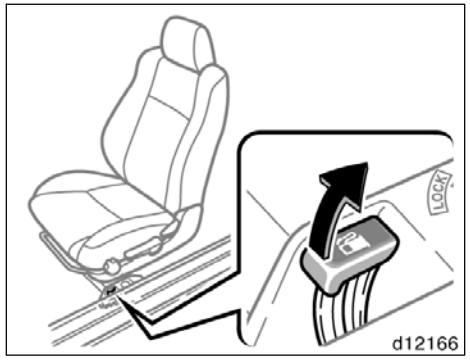

1. **To open the fuel filler door, pull the lever up.**

   When refueling, turn off the engine.

⚠ CAUTION

- **Do not smoke, cause sparks or allow open flames when refueling. The fumes are flammable.**
- **When opening the cap, do not remove the cap quickly. In hot weather, fuel under pressure could cause injury by spraying out of the filler neck if the cap is suddenly removed.**

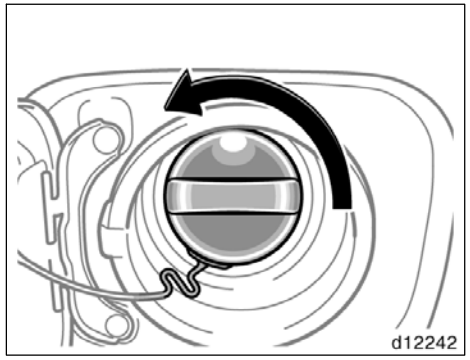

2. **To remove the fuel tank cap, turn the cap counterclockwise. Pause slightly before removing it.**

It is not unusual to hear a slight swoosh when the cap is opened.

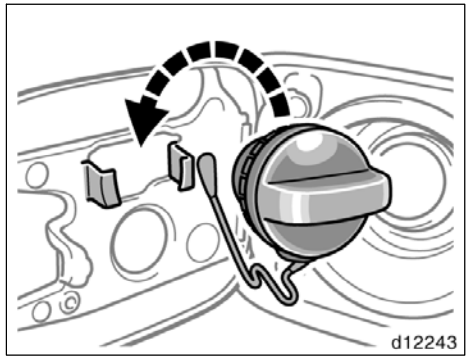

3. **The removed cap can be stored on the back side of the fuel filler door.**

When installing the cap, turn it clockwise until a click is heard, in order to fully close it. The cap returns slightly when your hand is released from the cap after closure, however this does not cause any problems.

If the cap is not installed securely, the malfunction indicator lamp comes on. Make sure the cap is tightened securely.

The indicator lamp goes off after driving several times. If the indicator lamp does not go off, contact your Toyota dealer as soon as possible.

⚠ CAUTION

- **Make sure the cap is installed securely to prevent fuel spillage in the event of an accident.**
- **Use only a genuine Toyota fuel tank cap for replacement. It is designed to regulate fuel tank pressure.**

NOTICE

To prevent damage to the cap, apply force only in the turning direction to the cap. Do not pull or pry it.

Electric moon roof

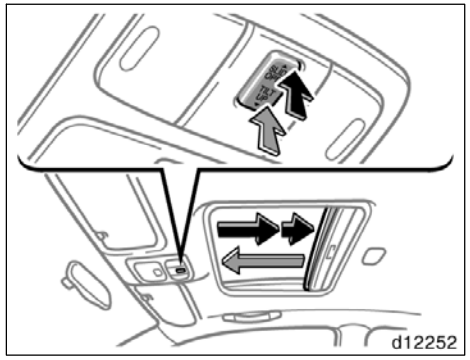

Sliding operation

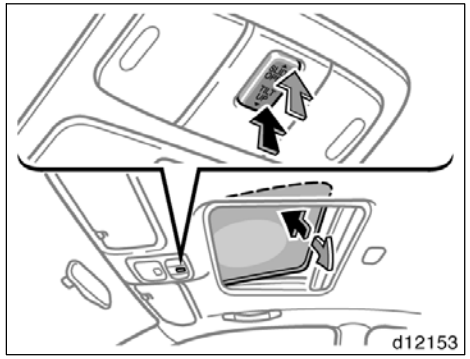

Tilting operation

To operate the moon roof, use the switch between the personal lights.

The moon roof works when the engine switch is in the “ON” position.

The sun shade can be opened or closed by hand.

Sliding operation—

To open: Push and hold the switch for 1 second on the “SLIDE OPEN” side.

The roof will open and stop partway 50 mm (2.0 in.) from the fully opened position. When you push the “SLIDE OPEN” side again, the moon roof will open fully. To stop the roof partway, push the switch on either the “SLIDE OPEN” or “TILT UP” side briefly.

As driving with the moon roof opened fully will cause wind throbs, we recommend you to drive with the moon roof partway 50 mm (2.0 in.) from the fully opened position.

The sun shade will be opened together with the roof.

To close: Push and hold the switch for 1 second on the “TILT UP” side.

The roof will fully close automatically. To stop the roof partway, push the switch on either the “SLIDE OPEN” or “TILT UP” side briefly.

Tilting operation—

To tilt up: Push and hold the switch for 1 second on the “TILT UP” side.

The roof will fully tilt up automatically. To stop the roof partway, push the switch on either the “SLIDE OPEN” or “TILT UP” side briefly.

To tilt down: Push and hold the switch for 1 second on the “SLIDE OPEN” side.

The roof will fully tilt down automatically. To stop the roof partway, push the switch on either the “SLIDE OPEN” or “TILT UP” side briefly.

Key off operation: If both front doors are closed, the moon roof works for about 43 seconds even after the engine switch is turned off. It stops working when either door is opened.

Jam protection function:

If something gets caught between the moon roof and frame during closing operation, the moon roof stops and opens half way.

If the moon roof receives a strong impact, this function may work even if nothing is caught.

If the moon roof does not operate automatically or the jam protection function does not operate correctly, you should normalize the moon roof.

To initialize the moon roof, push and hold the moon roof switch on the “TILT UP” side, the moon roof will tilt all the way up and then tilt down a little automatically.

Make sure that the moon roof opens and closes automatically. If the moon roof cannot be operated properly, have it checked by your Toyota dealer.

⚠ CAUTION

To avoid death or serious personal injury, you must do the following.

- **While the vehicle is moving, always keep the heads, hands and other parts of the bodies of all occupants away from the roof opening. Otherwise, they could be killed or seriously injured if the vehicle stops suddenly or if the vehicle is involved in an accident.**
- **Before you close the moon roof, always make sure there is nobody around the moon roof. You must also make sure nobody places his or her head, hands and other parts of the body in the roof opening. If someone’s neck, head or hands get caught in the closing roof, it could result in death or serious injury. When anyone closes the moon roof, first make sure it is safe to do so.**

Convertible top—
—Convertible top precautions

- Be sure to remove the ignition key when you leave your vehicle.
- Never leave anyone (particularly a small child) alone in your vehicle, especially with the ignition key still inserted. Otherwise, he/she could use the moon roof switch and get trapped in the roof opening. Unattended person (particularly a small child) can be involved in a serious accident.
- Never sit on top of the vehicle around the roof opening.
- Never try jamming any part of your body to activate the jam protection function intentionally, as it could result in a death or serious injury.
- The jam protection function may not work if something gets caught just before the moon roof is fully closed.

CAUTION

- When raising or lowering the convertible top, keep hands clear from the hinges of the top side rails and any part of the top linkage.
- Do not stop operating the switch in the middle of operation unless otherwise required. The roof will be gradually lowered, resulting in personal injury and damage to the convertible top mechanism.
- Do not open or close the convertible top when the wind is strong.
- The vehicle should never be driven with the convertible top partially lowered. Make sure the top has been either fully latched to the windshield frame or fully lowered before driving.
- While the vehicle is moving with the convertible top opened, nobody should stand up on the seat, sit on the rear seat seatback or lean over it. Otherwise, they could be killed or seriously injured if the vehicle stops suddenly or if the vehicle is involved in an accident.

- Before you raise the convertible top, always make sure there is nobody near the top. You must also make sure nobody places his or her head, hands and other parts of the body on the convertible top. If someone’s neck, head or hands get caught in the closing top, it could result in death or serious injury. When anyone raises the convertible top, first make sure it is safe to do so.
- Be sure to remove the ignition key when you leave your vehicle.
- Never leave anyone (particularly a small child) alone in your vehicle, especially with the ignition key still inserted. Otherwise, he/she could use the convertible top control switch and get trapped in the convertible top opening. Unattended person (particularly a small child) can be involved in a serious accident.

NOTICE

- ***Make sure there are no items or packages between the rear seatback and the convertible top storage area when raising or lowering the convertible top. Even small items may interfere with convertible top operation and can cause damage.***
- ***Do not sit or place excessive weight on the convertible top; when the top is up or down, damage to the top may result.***
- ***To prevent from damaging the convertible top material, do not raise or lower the convertible top when the temperature is below 0°C (32°F) or the convertible top is frozen. If necessary to do so, warm the vehicle in a heated garage prior to operating the convertible top mechanism.***
- ***Do not lower the convertible top if the top is damp or wet. Possible interior water damage, water stains or mildew of the top material may result.***
- ***When the convertible top is lowered, keep the rear window defogger turned off to avoid damage to the convertible top.***
- ***Do not open or close the convertible top repeatedly within a short time. If the motor prevention circuit activates, the side windows operation is disabled. In this case, operate the switch again after a while.***
- ***Do not sit or apply excessive load on the rear seat seatback when the convertible top is lowered. This may cause damage.***

—Before operating the convertible top

1. Park your vehicle on level ground.
2. Make sure the parking brake is applied firmly and the automatic transmission selector lever is in the “P” position.
3. Start the engine.

—Lowering the convertible top

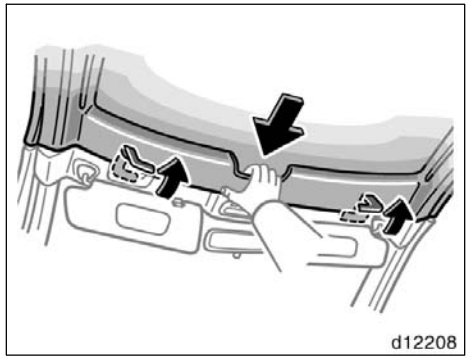

1. **Lower the sun visors. Pull down the convertible top by grasping the handle under the convertible top. And pull the latch handles fully backward.**

Visually check that the hooks of latch handles are unhooked.

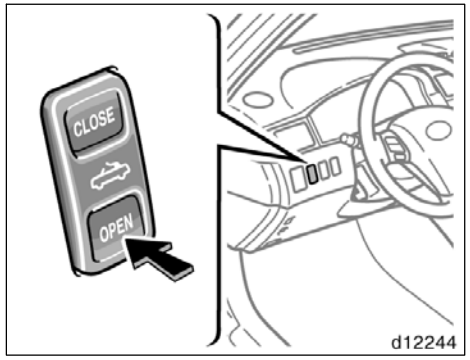

2. **Push and hold the convertible top control switch on the “OPEN” side until the convertible top is completely lowered. Raise the sun visors.**

The side windows and quarter windows will go completely down when the convertible top control switch is pressed on the “OPEN” side.

If you push the switch intermittently, the side windows may not go completely down.

You can conceal the lowered convertible top by covering it with the top boot. For instructions about how to use the top boot, see “—Using the top boot” on page 39 in this Section.

If the convertible top does not lower during switch operation, see “If the convertible top does not rise or lower” on page 319 in Section 4 for instructions.

—Raising the convertible top

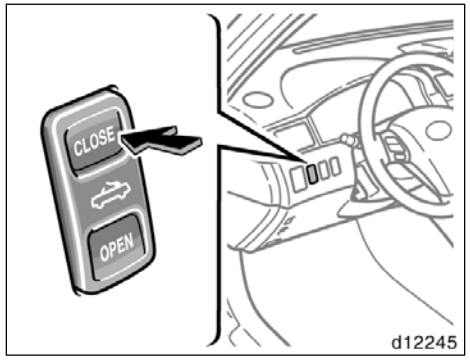

1. **Lower the sun visors. Push the convertible top control switch on the “CLOSE” side until the top stops moving.**

The side windows go partially down and quarter windows go completely down when the windows are closed and the convertible top control switch is pressed on the “CLOSE” side.

If the convertible top does not rise during switch operation, see “If the convertible top does not rise or lower” on page 319 in Section 4 for instructions.

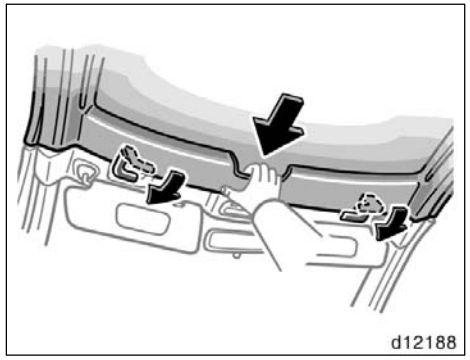

2. **Pull down the convertible top by grasping the handle under the convertible top. Push the latch handles fully forward until they are hooked.**

Visually check that the latch handles are fully seated in the strikers. Also, pull on the convertible top side rails to make sure the top is securely hooked.

3. **Raise the side windows, quarter windows and sun visors.**

—Using the top boot

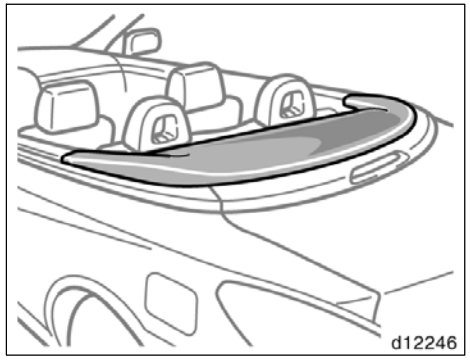

The top boot is used to conceal the lowered convertible top.

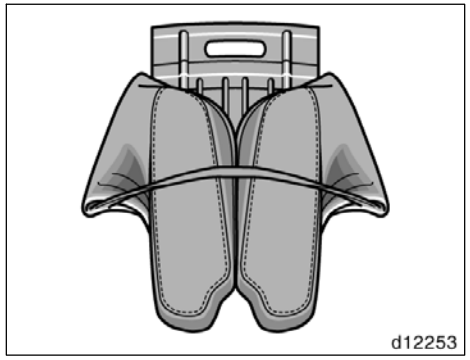

The top boot is folded as shown in the illustration and stored in the trunk.

When using it, take it out and unfasten the straps holding the top boot. Then unfold the boot and fasten the straps again.

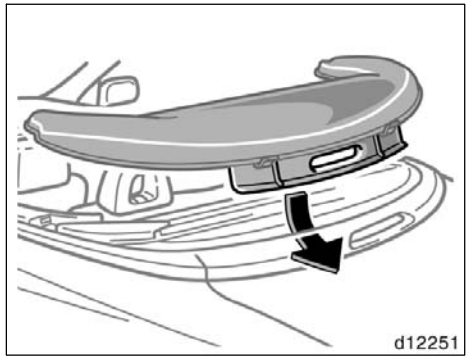

1. Insert the top boot rear retainer underside of the body molding and place the top boot over the lowered convertible top. Keep the edge of the top boot above the body molding.

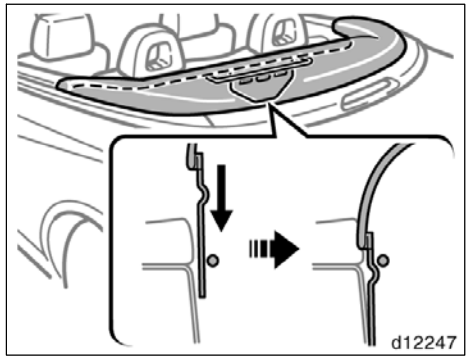

2. Insert the top boot front retainer between the rear seatback and anchor bar.

Make sure the top boot retainer protrusions are under the bar.

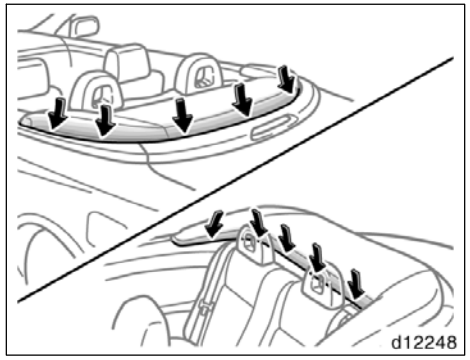

3. Tuck the top boot edge under the body molding, behind the rear seat-back and under the quarter trims until the edge seems are hidden.

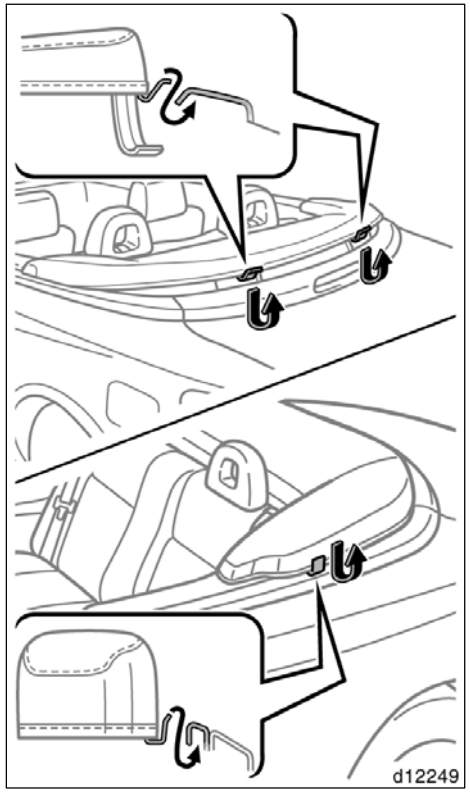

4. Hook the tabs at the rear and sides of the top boot to the quarter trim edge.

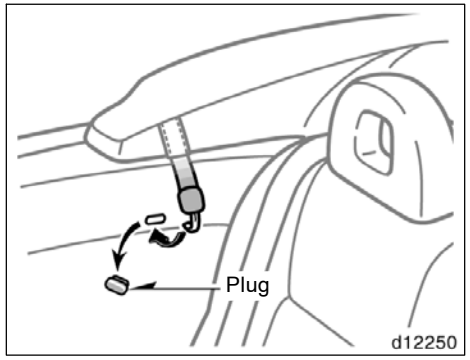

5. **Remove the plugs from the plugholes on the inside of the quarter trim and hook the straps into the plugholes.**

Store the plugs in a safe place until needed again.

When removing the top boot, do the above procedures in the reverse order.

⚠ CAUTION

Make sure the top boot is securely fixed. Otherwise the boot may be caught by the wind and fly off.

SECTION 1 – 3

OPERATION OF INSTRUMENTS AND CONTROLS

Occupant restraint systems

Seats 44
Front seats 44
Fold–down rear seat 49
Seat heaters 50
Head restraints 51
Seat belts 52
SRS airbags 61
Child restraint 85

Seats

While the vehicle is being driven, all vehicle occupants should have the seatback upright, sit well back in the seat and properly wear the seat belts provided.

CAUTION

- **Do not drive the vehicle unless the occupants are properly seated. Do not allow any passengers to sit on top of a folded–down seatback, or in the luggage compartment or cargo area. Persons not properly seated and/or not properly restrained by seat belts can be killed or severely injured in the event of emergency braking or a collision.**
- **During driving, do not allow any passengers to stand up or move around between seats. Otherwise, death or severe injuries can occur in the event of emergency braking or a collision.**

Front seats—
—Front seat precautions

Driver seat

CAUTION

The SRS driver airbag deploys with considerable force, and can cause death or serious injury especially if the driver is very close to the airbag. The National Highway Traffic Safety Administration (“NHTSA”) advises:

Since the risk zone for driver airbag is the first 50—75 mm (2—3 in.) of inflation, placing yourself 250 mm (10 in.) from your driver airbag provides you with a clear margin of safety. This distance is measured from the center of the steering wheel to your breastbone. If you sit less than 250 mm (10 in.) away now, you can change your driving position in several ways:

- **Move your seat to the rear as far as you can while still reaching the pedals comfortably.**
- **Slightly recline the back of the seat. Although vehicle designs vary, many drivers can achieve the 250 mm (10 in.) distance, even with the driver seat all the way forward, simply by reclining the back of the seat somewhat. If reclining the back of your seat makes it hard to see the road, raise yourself by using a firm, non–slippery cushion, or raise the seat if your vehicle has that feature.**
- **If your steering wheel is adjustable, tilt it downward. This points the airbag toward your chest instead of your head and neck.**

The seat should be adjusted as recommended by NHTSA above, while still maintaining control of the foot pedals, steering wheel, and your view of the instrument panel controls.

Front passenger seat

CAUTION

The SRS front passenger airbag also deploys with considerable force, and can cause death or serious injury especially if the front passenger is very close to the airbag. The front passenger seat should be as far from the airbag as possible with the seatback adjusted, so the front passenger sits upright.

Front seats (with SRS side airbags)

CAUTION

The SRS side airbags are installed in the driver and front passenger seats. Observe the following precautions.

- Do not lean against the front door when the vehicle is in use, since the side airbag inflates with considerable speed and force. Otherwise, you may be killed or seriously injured.
- Do not use seat accessories which cover the area where the side airbags inflate. Such accessories may prevent the side airbags from activating correctly, causing death or serious injury.
- Do not modify or replace the seats or upholstery of the seats with side airbags. Such change may prevent the side airbag system from activating correctly, disable the system or cause the side airbag system to inflate accidentally, resulting in death or serious injury.

—Seat adjustment precautions

CAUTION

- Do not adjust the seat while the vehicle is moving as the seat may unexpectedly move and cause the driver to lose control of the vehicle.
- Be careful that the seat does not hit a passenger or luggage.
- After adjusting the seat position, release the lever and try sliding the seat forward and backward to make sure it is locked in position.
- After adjusting the seatback, push your body back against the seat to make sure the seat is locked in position.
- Do not put objects under the seats. Otherwise, the objects may interfere with the seat–lock mechanism or unexpectedly push up the seat position adjusting lever and the seat may suddenly move, causing the driver to lose control of the vehicle.

—Adjusting front seats (manual seat)

- **While adjusting the seat, do not put your hands under the seat or near the moving parts. Otherwise, your hands or fingers may be caught and injured.**

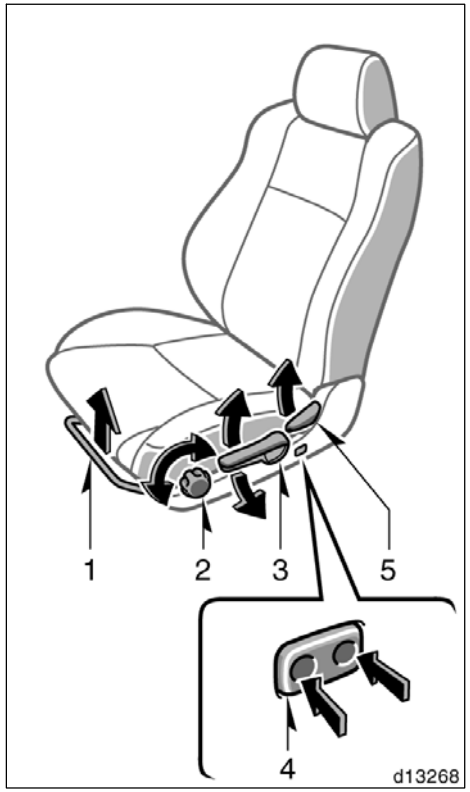

1. SEAT POSITION ADJUSTING LEVER

Hold the center of the lever and pull it up. Then slide the seat to the desired position with slight body pressure and release the lever.

2. SEAT CUSHION ANGLE ADJUSTING KNOB

Turn the knob either way.

3. SEAT HEIGHT ADJUSTING LEVER

Pull up or push down the lever.

4. SEAT LUMBAR SUPPORT ADJUSTING SWITCH

Push the switch on either side.

The amount of lumbar support will change while the switch is pushed.

5. SEATBACK ANGLE ADJUSTING LEVER

Lean forward and pull the lever up. Then lean back to the desired angle and release the lever.

—Adjusting front seats (power seat)

⚠ CAUTION

Avoid reclining the seatback any more than needed. The seat belts provide maximum protection in a frontal or rear collision when the driver and the front passenger are sitting up straight and well back in the seats. If you are reclined, the lap belt may slide past your hips and apply restraint forces directly to the abdomen or your neck may contact the shoulder belt. In the event of a frontal collision, the more the seat is reclined, the greater the risk of death or serious injury.

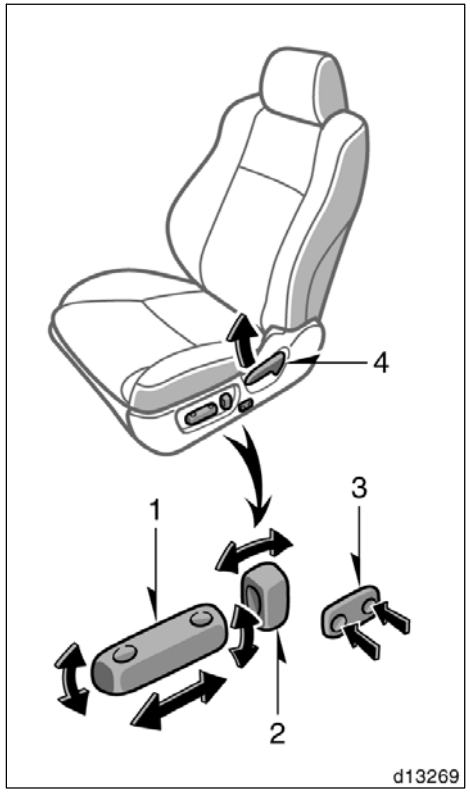

1. **SEAT POSITION, SEAT CUSHION ANGLE AND SEAT HEIGHT ADJUSTING SWITCH**

Move the control switch in the desired direction.

Releasing the switch will stop the seat at that position.

Do not place anything under the front seats, as this might interfere with the seat movement.

2. **SEATBACK ANGLE ADJUSTING SWITCH**

Move the control switch in the desired direction.

Releasing the switch will stop the seatback at that position.

CAUTION

Avoid reclining the seatback any more than needed. The seat belts provide maximum protection in a frontal or rear collision when the driver and the front passenger are sitting up straight and well back in the seats. If you are reclined, the lap belt may slide past your hips and apply restraint forces directly to the abdomen or your neck may contact the shoulder belt. In the event of a frontal collision, the more the seat is reclined, the greater the risk of death or serious injury.

3. SEAT LUMBAR SUPPORT ADJUSTING SWITCH

Push the switch on either side.

The amount of lumbar support will change while the switch is pushed.

4. SEATBACK LOCK RELEASE LEVER

This lever uses for the rear seat entry. For details, see “—Moving front seats for rear seat entry” described below.

—Moving front seats for rear seat entry

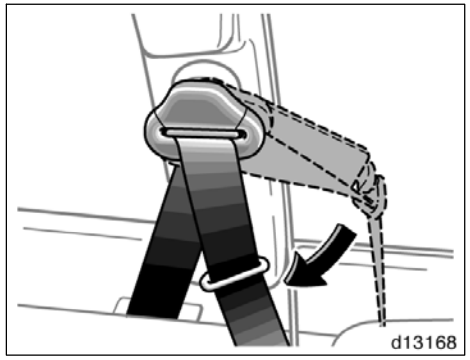

Coupe

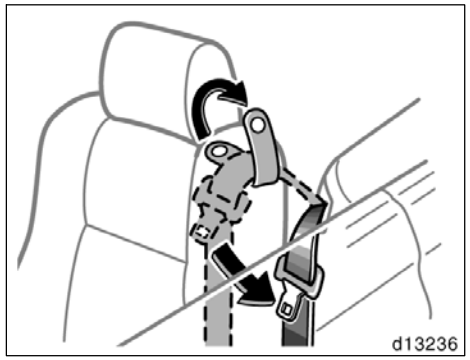

Convertible

Coupe—Before access to the rear seat, push the seat belt hanger down as far as it will go when it is in the raised position.

Convertible—Before access to the rear seat, remove the seat belt from the seat belt guide.

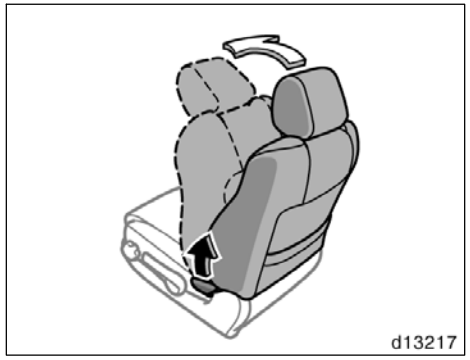

From the driver’s side

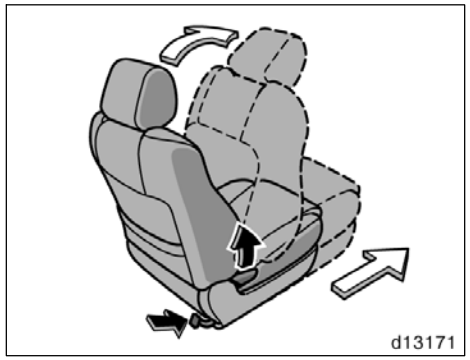

From the front passenger’s side

From the driver’s side—

Pull up the seatback angle adjusting lever (manual seat) or seatback lock release lever (power seat), and incline the seatback.

After passengers are in, lift the seatback.

From the front passenger’s side—

Pull up the seatback angle adjusting lever or press the lock release pedal behind the seatback, and move the seat to the front most position.

After passengers are in, lift the seatback and return the seat until it locks.

⚠ CAUTION

- **After putting back the seat, try pushing the seat forward and rearward to make sure it is secured in place.**
- **Never allow anyone to rest their foot on the lock release pedal behind the front passenger seatback while the vehicle is moving.**

Fold-down rear seat (coupe)

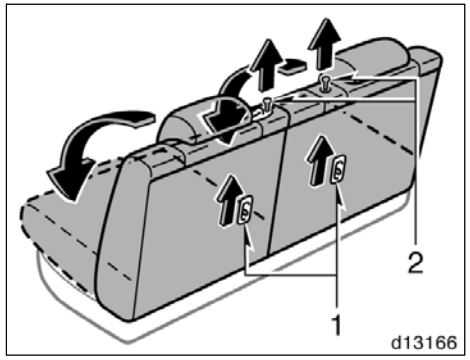

1. **Pull up the seatback security lock lever (1) to the unlock position.**
2. **Pull up the lock release button (2).**
3. **Fold down the seatback.**

Each seatback can be folded separately.

NOTICE

To prevent damage to the lock release button, do not fold down the seatback by pulling the lock release button.

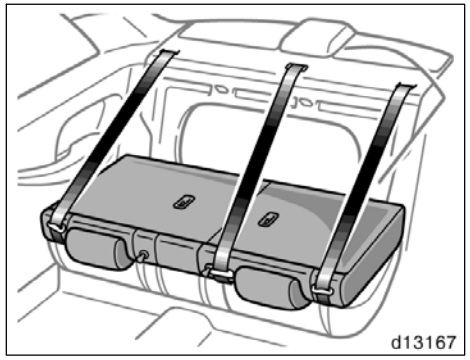

This will enlarge the trunk as far as the seatbacks. See “—Stowage precautions” on page 285 in Section 2 for precautions when loading luggage.

NOTICE

Make sure the luggage loaded in the enlarged trunk will not damage the webbing of the rear seat belts when the seatback is folded down.

CAUTION

When returning the seatback to the upright position, observe the following precautions in order to prevent death or serious injury in a collision or sudden stop:

- **Make sure the seatback is securely locked by pushing forward and rearward on top of the seatback and that the red mark at the button on top of the seatback cannot be seen. Failure to do so will prevent the seat belt from operating properly.**
- **Make sure the seat belts are not twisted or caught in the seatback and are arranged in the proper position and are ready to use.**

Seat heaters

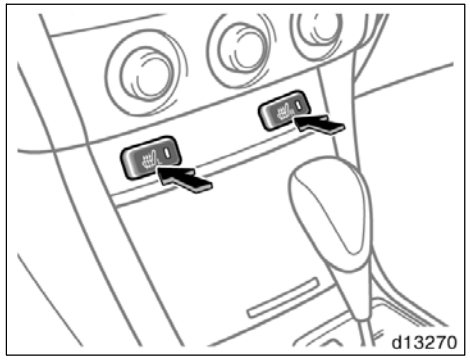

To turn on the seat heater, push the switch. At this time, the indicator light will illuminate to indicate the seat heater is operating.

To turn off the seat heater, push the switch once again.

The engine switch must be in the “ON” position to operate seat heaters.

⚠ CAUTION

Occupants must use caution when operating the seat heater because it may make them feel too hot or cause burns at low temperatures (erythema, varicella). Use extra caution for;

- **Babies, small children, elderly persons, sick persons or persons with physical disabilities**
- **Persons who have sensitive skin**
- **Persons who have taken alcohol or drugs which induce sleep (sleeping drug, cold remedy, etc.)**

To prevent the seat overheating, do not use the seat heater with a blanket, cushion, or other insulating objects which cover the seat.

NOTICE

- ***Do not put unevenly weighed objects on the seat and do not stick sharp objects (needles, nails, etc.) into the seat.***
- ***When cleaning the seats, do not use organic substances (paint thinner, benzine, alcohol, gasoline, etc.). They may damage the heater and seat surface.***
- ***To prevent the battery from becoming discharged, turn the switch off when the engine is not running.***

Head restraints

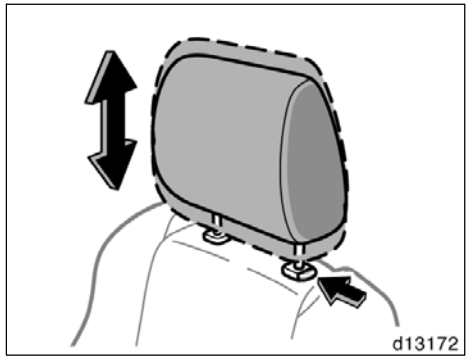

Front

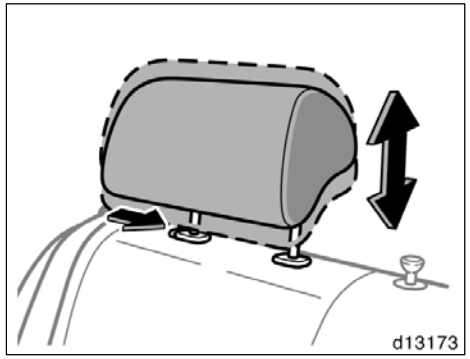

Rear (coupe)

For your safety and comfort, adjust the head restraint before driving.

To raise: Pull it up.
To lower: Push it down while pressing the lock release button.

Rear head restraints (coupe)—When an occupant sits on the rear seats, always pull up the head restraint to the lock position.

The head restraint is most effective when it is close to your head. Therefore, using a cushion on the seatback is not recommended.

⚠ CAUTION

- **Adjust the center of the head restraint so that it is closest to the top of your ears.**
- **After adjusting the head restraint, make sure it is locked in position.**
- **Do not drive with the head restraints removed.**

Seat belts—
—Seat belt precautions

Toyota strongly urges that the driver and passengers in the vehicle be properly restrained at all times with the seat belts provided. Failure to do so could increase the chance of injury and/or the severity of injury in accidents.

The seat belts provided for your vehicle are designed for people of adult size, large enough to properly wear them.

Child. Use a child restraint system appropriate for the child until the child becomes large enough to properly wear the vehicle’s seat belts. See “Child restraint” on page 85 in this Section for details.

If a child is too large for a child restraint system, the child should sit in the rear seat and must be restrained using the vehicle’s seat belt. According to accident statistics, the child is safer when properly restrained in the rear seat than in the front seat.

If a child must sit in the front seat, the seat belts should be worn properly. If an accident occurs and the seat belts are not worn properly, the force of the rapid inflation of the airbag may cause death or serious injury to the child.

Do not allow any children to stand up or kneel on either rear or front seats. An unrestrained child could suffer serious injury or death during emergency braking or a collision. Also, do not let the child sit on your lap. Holding a child in your arms does not provide sufficient restraint.

Pregnant woman. Toyota recommends the use of a seat belt. Ask your doctor for specific recommendations. The lap belt should be worn securely and as low as possible over the hips and not on the waist.

Injured person. Toyota recommends the use of a seat belt. Depending on the injury, first check with your doctor for specific recommendations.

⚠ CAUTION

Persons should ride in their seats properly wearing their seat belts whenever the vehicle is moving. Otherwise, they are much more likely to suffer serious bodily injury or death in the event of sudden braking or a collision.

When using the seat belts, observe the following:

- **Use the belt for only one person at a time. Do not use a single belt for two or more people—even children.**
- **Avoid reclining the seatback any more than needed. The seat belts provide maximum protection in a frontal or rear collision when the driver and the front passenger are sitting up straight and well back in the seats. If you are reclined, the lap belt may slide past your hips and apply restraint forces directly to the abdomen or your neck may contact the shoulder belt. In the event of a frontal collision, the more the seat is reclined, the greater the risk of death or serious injury.**
- **Be careful not to damage the belt webbing or hardware. Take care that they do not get caught or pinched in the seat or doors.**
- **Inspect the belt system periodically. Check for cuts, fraying, and loose parts. Damaged parts should be replaced. Do not disassemble or modify the system.**
- **Keep the belts clean and dry. If they need cleaning, use a mild soap solution or lukewarm water. Never use bleach, dye, or abrasive cleaners, or allow them to come into contact with the belts—they may severely weaken the belts. (See “Cleaning the interior” on page 327 in Section 5.)**
- **Replace the belt assembly (including bolts) if it has been used in a severe impact. The entire assembly should be replaced even if damage is not obvious.**

—Fastening front and rear seat belts

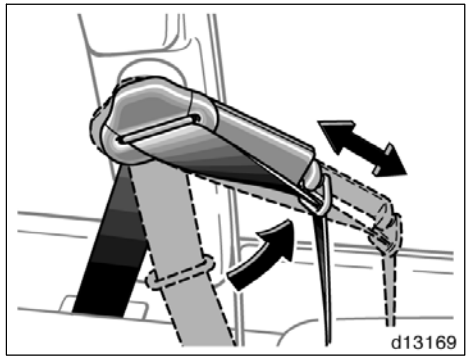

USING FRONT SEAT BELT HANGERS (coupe)

Raise the front seat belt hanger until it locks before you fasten the front seat belt. Then adjust the length of the hanger by pulling or pushing it.

You will hear a click when the seat belt hanger locks in raised position.

⚠ CAUTION

Make sure the seat belt hanger is secured in the raised position before you fasten the seat belt. If it is not, the seat belt may not work properly.

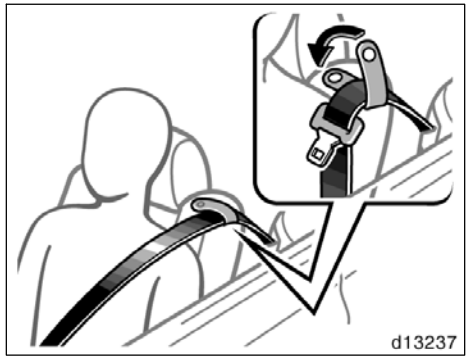

USING FRONT SEAT BELT GUIDES (convertible)

The seat belt guide helps keep the seat belt in its proper position. The guide can also be used to reach the seat belt tab easily.

To use the seat belt guide, detach the hanger magnet. Place the seat belt through the guide and reattach the magnets.

⚠ CAUTION

- **Always make sure the shoulder belt is positioned securely across the shoulder, but kept away from neck. Use the seat belt guide to position the belt if necessary. Failure to properly position the belt may reduce the amount of protection in an accident and could lead to death or serious injuries in a collision.**
- **Always make sure that the belt webbing is not twisted and runs freely through the guide when using it.**
- **Always adjust the seat belt webbing snugly, adjust the seat belt guide and seat position to assure proper fit and comfort of your seat belt.**

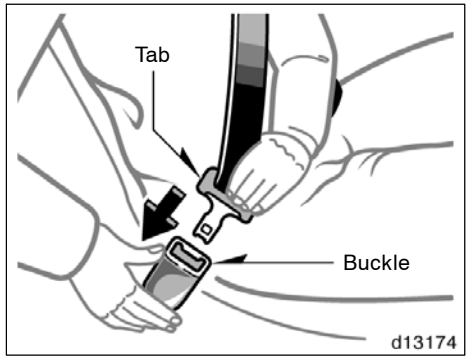

Adjust the seat as needed and sit up straight and well back in the seat. To fasten your belt, pull it out of the retractor and insert the tab into the buckle.

You will hear a click when the tab locks into the buckle.

The seat belt length automatically adjusts to your size and the seat position.

The retractor will lock the belt during a sudden stop or on impact. It also may lock if you lean forward too quickly. A slow, easy motion will allow the belt to extend, and you can move around freely.

When a passenger’s shoulder belt is completely extended and is then retracted even slightly, the belt is locked in that position and cannot be extended. This feature is used to hold the child restraint system securely. (For details, see “Child restraint” on page 85 in this Section.) To free the belt again, fully retract the belt and then pull the belt out once more.

If the seat belt cannot be pulled out of the retractor, firmly pull the belt and release it. You will then be able to smoothly pull the belt out of the retractor.

CAUTION

- **After inserting the tab, make sure the tab and buckle are locked and that the belt is not twisted.**
- **Do not insert coins, clips, etc. in the buckle as this may prevent you from properly latching the tab and buckle.**
- **If the seat belt does not function normally, immediately contact your Toyota dealer. Do not use the seat until the seat belt is fixed, because it cannot protect an adult occupant or your child from death or serious injury.**

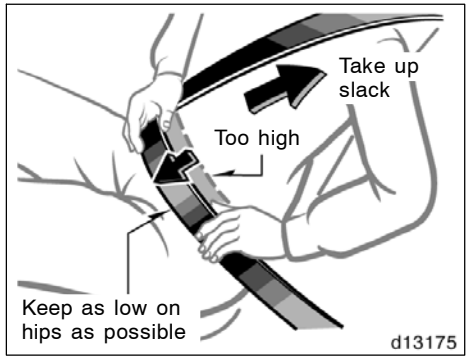

Adjust the position of the lap and shoulder belts.

Position the lap belt as low as possible on your hips—not on your waist, then adjust it to a snug fit by pulling the shoulder portion upward through the latch plate.

CAUTION

- **Both high–positioned lap belts and loose–fitting belts could cause death or serious injuries due to sliding under the lap belt during a collision or other unintended event. Keep the lap belt positioned as low on hips as possible.**
- **Do not place the shoulder belt under your arm.**

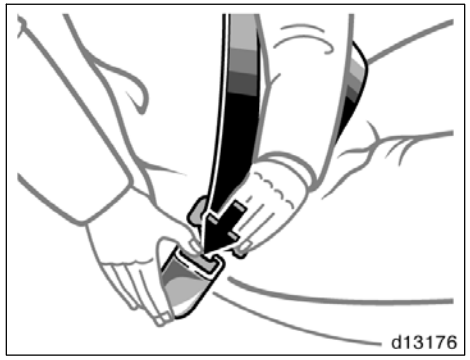

To release the belt, press the buckle release button and allow the belt to retract.

If the belt does not retract smoothly, pull it out and check for kinks or twists. Then make sure it remains untwisted as it retracts.

—Seat belt extender

If your seat belts cannot be fastened securely because they are not long enough, a personalized seat belt extender is available from your Toyota dealer free of charge.

Please contact your local Toyota dealer to order the proper required length for the extender. Bring the heaviest coat you expect to wear for proper measurement and selection of length. Additional ordering information is available at your Toyota dealer.

⚠ CAUTION

When using the seat belt extender, observe the following precautions. Failure to follow these instructions could reduce the effectiveness of the seat belt restraint system in case of an accident, increasing the chance of death or serious injury.

- **Remember that the extender provided for you may not be safe when used on a different vehicle, for another person, or at a different seating position than the one originally intended.**

- **If the seat belt extender has been connected to the driver’s seat belt buckle without wearing the seat belt when using the extender in the driver’s seat, the SRS driver’s airbag system will judge that the driver wears the seat belt even if not wearing it. In this case, the driver’s airbag may not activate correctly, causing death or serious injury in the event of collision. Be sure to wear the seat belt with the seat belt extender.**

- **Make sure the front passenger occupant classification indicator light indicates “ON” when using the seat belt extender for the front passenger seat. If the indicator light indicates “OFF”, disconnect the extender tongue from the seat belt buckle, then reconnect the seat belt. Reconnect the seat belt extender after making sure the indicator light indicates “ON”. If you use the seat belt extender while the indicator light indicates “OFF”, the front passenger airbag and side airbag on the front passenger side may not activate correctly, which could cause death or serious injury in the event of collision.**
- **Be sure to wear the seat belt without the seat belt extender if you can fasten the seat belt without the extender.**

- **Do not use the seat belt extender when installing a child restraint system on the front or rear passenger seat. If installing a child restraint system with the seat belt extender connected to the seat belt, the seat belt will not securely hold the child restraint system, which could cause death or serious injury to the child or other passengers in the event of collision.**

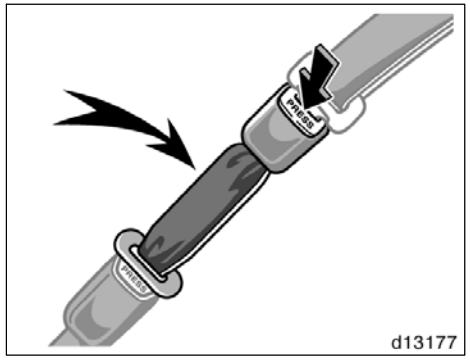

To connect the extender to the seat belt, insert the tab into the seat belt buckle so that the “PRESS” signs on the buckle release buttons of the extender and the seat belt are both facing outward as shown.

You will hear a click when the tab locks into the buckle.

When releasing the seat belt, press on the buckle release button on the extender, not on the seat belt. This helps prevent damage to the vehicle interior and extender itself.

As far as the seat belt extender on the front passenger side is concerned, do not fail to disconnect the extender from the seat belt after the above operation in order to activate the front passenger airbag correctly when getting into the vehicle next time.

When not in use, remove the extender and store in the vehicle for future use.

⚠ CAUTION

- **After inserting the tab, make sure the tab and buckle are locked and that the lap and shoulder portions of the belt and the seat belt extender are not twisted.**
- **Do not insert coins, clips, etc. in the buckle as this may prevent you from properly latching the tab and buckle.**
- **If the seat belt does not function normally, immediately contact your Toyota dealer. Do not use the seat until the seat belt is fixed, because it cannot protect an adult occupant or your child from death or serious injury.**

—Seat belt pretensioners

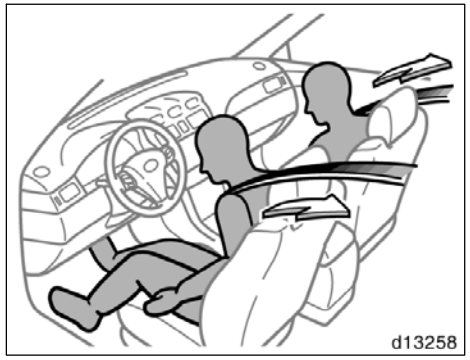

The driver and front passenger seat belt pretensioners are designed to be activated in response to a severe frontal impact.

When the sensor detects a severe frontal impact, the front seat belts are quickly drawn back by the retractors so that the belts snugly restrain the occupants.

The front passenger’s seat belt pretensioner will not activate if no passenger is detected in the front passenger seat by the front passenger occupant classification system. However, the front passenger’s seat belt pretensioner may activate if luggage is put on the seat, or the seat belt is buckled up regardless of the presence of an occupant in the seat. (As for the front passenger occupant classification system, see “—Front passenger occupant classification system” on page 81 in this Section.)

The seat belt pretensioners and SRS airbags may not operate together in all collisions.

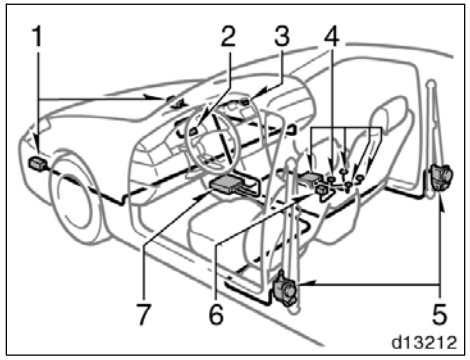

The seat belt pretensioner system consists mainly of the following components and their locations are shown in the illustration.

1. Front airbag sensors
2. SRS warning light
3. Front passenger occupant classification indicator light
4. Front passenger occupant classification system (ECU and sensors)
5. Seat belt pretensioner assemblies
6. Front passenger’s seat belt buckle switch
7. Airbag sensor assembly

The seat belt pretensioners are controlled by the airbag sensor assembly. The airbag sensor assembly consists of a safing sensor and airbag sensor.

When the seat belt pretensioners are activated, an operating noise may be heard and a small amount of non–toxic gas may be released. This does not indicate that a fire is occurring. This gas is normally harmless.

Once the seat belt pretensioners have been activated, the seat belt retractors remain locked.

⚠ CAUTION

Do not modify, remove, strike or open the seat belt pretensioner assemblies, airbag sensor or surrounding area or wiring. Failure to follow these instructions may prevent the seat belt pretensioners from activating correctly, cause sudden operation of the system or disable the system, which could result in death or serious injury. Consult your Toyota dealer about any repair and modification.

NOTICE

Do not perform any of the following changes without consulting your Toyota dealer. Such changes can interfere with proper operation of the seat belt pretensioners in some cases.

- ***Installation of electronic devices such as a mobile two–way radio, cassette tape player or compact disc player***
- ***Repairs on or near the front seat belt retractor assemblies***
- ***Modification of the suspension system***
- ***Modification of the front end structure***
- ***Attachment of a grille guard (bull bar, kangaroo bar, etc.), snowplow, winches or any other equipment to the front end***
- ***Repairs made on or near the front fenders, front end structure or console***

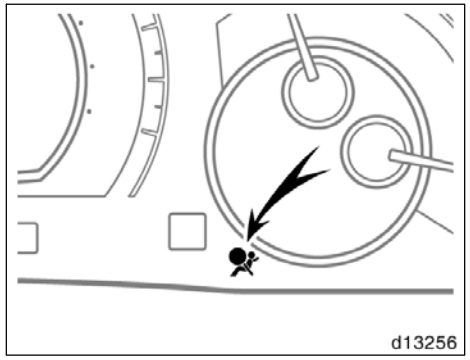

This indicator comes on when the engine switch is turned to the “ON” position. It goes off after about 6 seconds. This means the seat belt pretensioners are operating properly.

This warning light system monitors the airbag sensor assembly, front airbag sensors, side airbag sensors, side and curtain shield airbag sensors, curtain shield airbag sensors, driver’s seat position sensor, driver’s seat belt buckle switch, front passenger occupant classification system and indicator light, front passenger’s seat belt buckle switch, seat belt pretensioner assemblies, inflators, warning light, interconnecting wiring and power sources. (For details, see “Service reminder indicators and warning buzzers” on page 133 in Section 1–6.)

If any of the following conditions occurs, this indicates a malfunction of the airbags or seat belt pretensioners. Contact your Toyota dealer as soon as possible.

- When the engine switch is turned to the “ON” position, the light does not come on or remains on for more than 6 seconds.
- The light comes on or flashes while driving.
- If any seat belt does not retract or cannot be pulled out due to a malfunction or activation of the relevant seat belt pretensioner.
- The seat belt pretensioner assembly or surrounding area has been damaged.

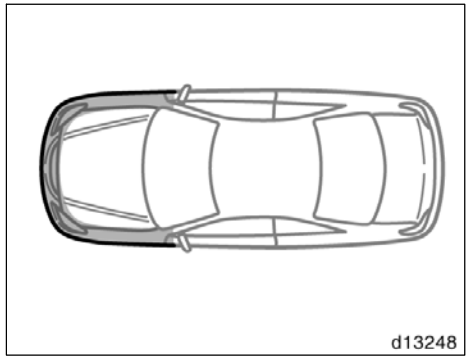

In the following cases, contact your Toyota dealer as soon as possible:

- The front of the vehicle (shaded in the illustration) was involved in an accident that was not severe enough to cause the seat belt pretensioners to operate.
- Either seat belt pretensioner assembly or surrounding area is scratched, cracked, or otherwise damaged.

SRS airbags—
—SRS driver airbag and front passenger airbag

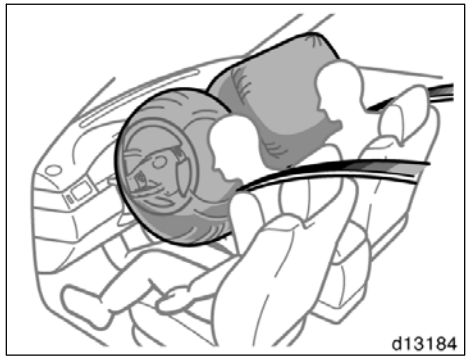

The SRS (Supplemental Restraint System) front airbags are designed to provide further protection for the driver and front passenger in addition to the primary safety protection provided by the seat belts.

Your vehicle is equipped with “ADVANCED AIRBAGS” designed based on US motor vehicle safety standards (FMVSS208). The airbag system controls airbag deployment power for the driver and front passenger. The driver airbag system consists of the driver seat’s position sensor etc. The front passenger’s airbag system consists of the front passenger occupant classification sensor etc.

In response to a severe frontal impact, the SRS front airbags work with the seat belts to help reduce injury by inflating. The SRS front airbags help reduce injuries mainly to the driver’s or front passenger’s head or chest caused by hitting the vehicle interior.

The SRS front passenger airbag will not activate if there is no passenger sitting in the front passenger seat. However, the front passenger airbag may deploy if luggage is put in the seat, or the seat belt is buckled up, regardless of the presence of an occupant in the seat. (As for the front passenger occupant classification system, see “—Front passenger occupant classification system” on page 81 in this Section.)

Always wear your seat belt properly.

⚠ CAUTION

- **The SRS front airbag system is designed only as a supplement to the primary protection of the driver and front passenger seat belt systems. The driver and front passenger can be killed or seriously injured by the inflating airbags if they do not wear the available seat belts properly. During sudden braking just before a collision, an unrestrained driver or front passenger can move forward into direct contact with or close proximity to the airbag which may then deploy during the collision. To ensure maximum protection in an accident, the driver and all passengers in the vehicle must wear their seat belts properly. Wearing a seat belt properly during an accident reduces the chances of death or serious injury or being thrown out of the vehicle. For instructions and precautions concerning the seat belt system, see “Seat belts” on page 52 in this Section.**

- **Improperly seated and/or restrained infants and children can be killed or seriously injured by the deploying airbags. An infant or child who is too small to use a seat belt should be properly secured using a child restraint system. Toyota strongly recommends that all infants and children be placed in the rear seat of the vehicle and properly restrained. The rear seat is the safest for infants and children. For instructions concerning the installation of a child restraint system, see “Child restraint” on page 85 in this Section.**

The SRS front airbags are designed to deploy in severe (usually frontal) collisions where the magnitude and duration of the forward deceleration of the vehicle exceeds the designed threshold level.

The SRS front airbags will deploy if the severity of the impact is above the designed threshold level, comparable to an approximate 25 km/h (15 mph) collision when the vehicle has the impact straight into a fixed barrier that does not move or deform.

However, this threshold velocity will be considerably higher if the vehicle strikes an object, such as a parked vehicle or sign pole, which can move or deform on impact, or if the vehicle is involved in an underride collision (e.g. a collision in which the front of the vehicle “underrides”, or goes under, the bed of a truck, etc.).

It is possible that in some collisions where the forward deceleration of the vehicle is very close to the designed threshold level, the SRS front airbags and the seat belt pretensioners may not activate together.

Always wear your seat belts properly.

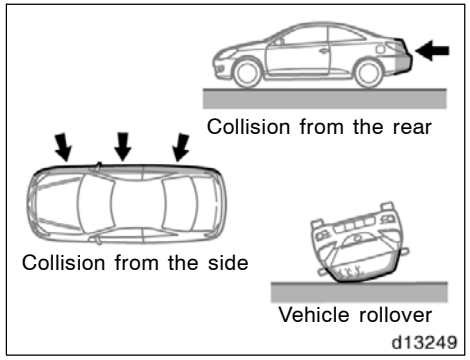

The SRS front airbags are not generally designed to inflate if the vehicle is involved in a side or rear collision, if it rolls over, or if it is involved in a low–speed frontal collision. But, whenever a collision of any type causes sufficient forward deceleration of the vehicle, deployment of the SRS front airbags may occur.

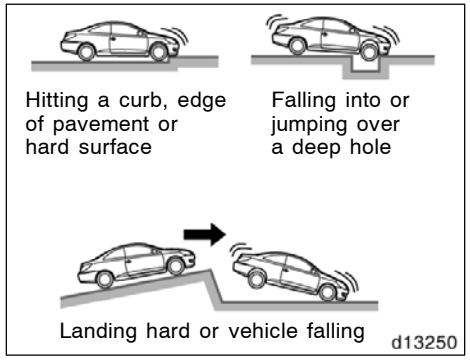

The SRS front airbags may also deploy if a serious impact occurs to the underside of your vehicle. Some examples are shown in the illustration.

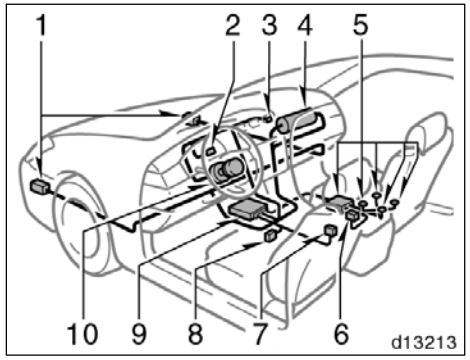

The SRS front airbag system consists mainly of the following components, and their locations are shown in the illustration.

1. Front airbag sensors
2. SRS warning light
3. Front passenger occupant classification indicator light
4. Airbag module for front passenger (airbag and inflator)
5. Front passenger occupant classification system (ECU and sensors)
6. Front passenger’s seat belt buckle switch
7. Driver’s seat belt buckle switch
8. Driver’s seat position sensor
9. Airbag sensor assembly
10. Airbag module for driver (airbag and inflator)

The airbag sensor assembly consists of a safing sensor and airbag sensor.

The front airbag sensors constantly monitor the forward deceleration of the vehicle. If an impact results in a forward deceleration beyond the designed threshold level, the system triggers the airbag inflators. At this time a chemical reaction in the inflators very quickly fills the airbags with non–toxic gas to help restrain the forward motion of the occupants. The front airbags then quickly deflate, so that there is no obstruction of the driver’s vision should it be necessary to continue driving.

When the airbags inflate, they produce a loud noise and release some smoke and residue along with non–toxic gas. This does not indicate a fire. This smoke may remain inside the vehicle for some time, and may cause some minor irritation to the eyes, skin or breathing. Be sure to wash off any residue as soon as possible to prevent any potential skin irritation with soap and water. If you can safely exit from the vehicle, you should do so immediately.

Deployment of the airbags happens in a fraction of a second, so the airbags must inflate with considerable force. While the system is designed to reduce serious injuries, primarily to the head and chest, it may also cause other, less severe injuries to the face, chest, arms and hands. These are usually in the nature of minor burns or abrasions and swelling, but the force of a deploying airbag can cause more serious injuries, especially if an occupant’s hands, arms, chest or head is in close proximity to the airbag module at the time of deployment. This is why it is important for the occupant to: avoid placing any object or part of the body between the occupant and the airbag module; sit straight and well back into the seat; wear the available seat belt properly; and sit as far as possible from the airbag module, while still maintaining control of the vehicle.

Parts of the airbag module (steering wheel hub, airbag cover and inflator) may be hot for several minutes after deployment, so do not touch! The airbags inflate only once. The windshield may be damaged by absorbing some of the force of the inflating airbag.

⚠ CAUTION

The driver or front passenger who is too close to the steering wheel or dashboard during airbag deployment can be killed or seriously injured. Toyota strongly recommends that:

- **The driver sit as far back as possible from the steering wheel while still maintaining control of the vehicle.**
- **The front passenger sit as far back as possible from the dashboard.**
- **All vehicle occupants be properly restrained using the available seat belts.**

For instructions and precautions concerning the seating position, see “—Front seat precautions” on page 44 in this Section.

- **Do not sit on the edge of the seat or lean against the dashboard when the vehicle is in use, since the front passenger airbag could inflate with considerable speed and force. Anyone who is up against, or very close to, an airbag when it inflates, can be killed or seriously injured. Sit up straight and well back in the seat, and always use your seat belt properly.**

- Toyota strongly recommends that all infants and children be placed in the rear seat of the vehicle and be properly restrained.
- Do not hold a child on your lap or in your arms. Use a child restraint system in the rear seat. For instructions concerning the installation of a child restraint system, see “Child restraint” on page 85 in this Section.

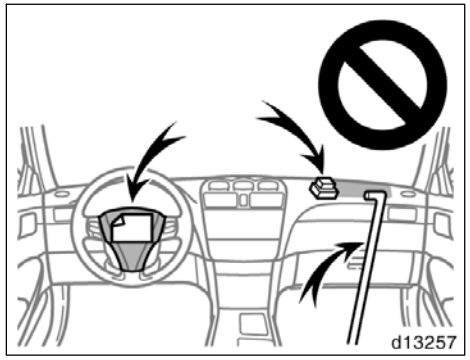

- Do not put anything or any part of your body on or in front of the dashboard or steering wheel pad that houses the front airbag system. They might restrict inflation or cause death or serious injury as they are projected rearward by the force of the deploying airbags. Likewise, the driver and front passenger should not hold objects in their arms or on their knees.

- Do not modify or remove any wiring. Do not modify, remove, strike or open any components such as the steering wheel pad, steering wheel, column cover, dashboard near the front passenger airbag, front passenger airbag cover, front passenger airbag or airbag sensor assembly. Doing so may prevent the front airbag system from activating correctly, cause sudden activation of the system or disable the system, which could result in death or serious injury.

Failure to follow these instructions can result in death or serious injury. Consult your Toyota dealer about any repair and modification.

If you wish to modify your vehicle for a person with physical disability, consult your Toyota dealer. It may dangerously interfere with the SRS front airbags operation.

NOTICE

Do not perform any of the following changes without consulting your Toyota dealer. Such changes can interfere with proper operation of the SRS front airbag system in some cases.

- ***Installation of electronic devices such as a mobile two-way radio, cassette tape player or compact disc player***
- ***Modification of the suspension system***
- ***Modification of the front end structure***
- ***Attachment of a grille guard (bull bar, kangaroo bar, etc.), snowplow, winches or any other equipment to the front end***
- ***Repairs made on or near the front fenders, front end structure, console, steering column, steering wheel, front passenger’s seat or dashboard near the front passenger airbag***

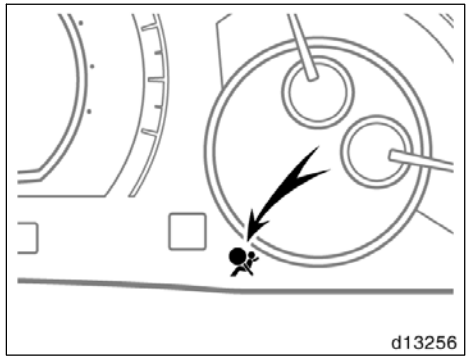

This indicator comes on when the engine switch is turned to the “ON” position. It goes off after about 6 seconds. This means the SRS front airbags are operating properly.

This warning light system monitors the airbag sensor assembly, front airbag sensors, side airbag sensors, side and curtain shield airbag sensors, curtain shield airbag sensors, driver’s seat position sensor, driver’s seat belt buckle switch, front passenger occupant classification system and indicator light, front passenger’s seat belt buckle switch, seat belt pretensioner assemblies, inflators, warning light, interconnecting wiring and power sources. (For details, see “Service reminder indicators and warning buzzers” on page 133 in Section 1–6.)

If any of the following conditions occurs, this indicates a malfunction of the airbags or seat belt pretensioners. Contact your Toyota dealer as soon as possible.

- When the engine switch is turned to the “ON” position, the light does not come on or remains on for more than 6 seconds.
- The light comes on or starts flashing while driving.

The SRS warning light will come on and front passenger occupant classification indicator light will indicate “OFF” if there is a malfunction in the front passenger occupant classification system.

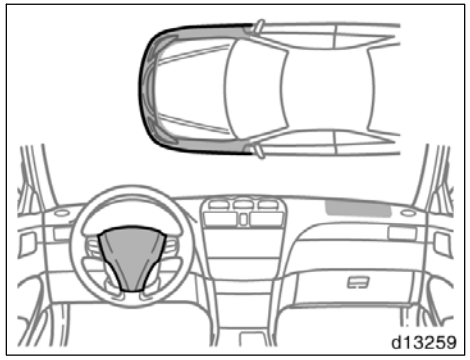

In the following cases, contact your Toyota dealer as soon as possible:

- The SRS front airbags have been inflated.
- The front of the vehicle (shaded in the illustration) was involved in an accident that was not severe enough to cause the SRS front airbags to inflate.
- The pad section of the steering wheel or front passenger airbag cover (shaded in the illustration) is scratched, cracked, or otherwise damaged.

NOTICE

Do not disconnect the battery cables before contacting your Toyota dealer.

—SRS side airbags

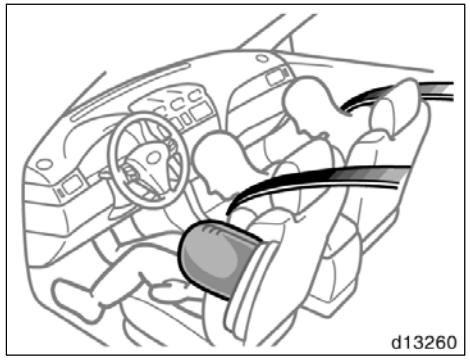

The SRS (Supplemental Restraint System) side airbags are designed to provide further protection for the driver and front passenger in addition to the primary safety protection provided by the seat belts.

In response to a severe side impact, the SRS side airbags work with the seat belts to help reduce injury by inflating. The SRS side airbags help to reduce injuries mainly to the driver’s or front passenger’s chest.

The SRS side airbag on the passenger seat will not activate if there is no passenger sitting in the front passenger seat. However, the side airbag on the passenger seat may deploy if luggage is put in the seat, or the seat belt is buckled up regardless of the presence of the occupant in the seat. (As for the front passenger occupant classification system, see “—Front passenger occupant classification system” on page 81 in this Section.)

Always wear your seat belt properly.

CAUTION

- **The SRS side airbag system is designed only as a supplement to the primary protection of the driver and front passenger seat belt systems. To ensure maximum protection in an accident, the driver and all passengers in the vehicle must wear their seat belts properly. Wearing a seat belt properly during an accident reduces the chances of death or serious injury or being thrown out of the vehicle. For instructions and precautions concerning the seat belt system, see “Seat belts” on page 52 in this Section.**

- **Improperly seated and/or restrained infants and children can be killed or seriously injured by the deploying airbags. An infant or child who is too small to use a seat belt should be properly secured using a child restraint system. Toyota strongly recommends that all infants and children be placed in the rear seats of the vehicle and properly restrained. The rear seats are the safest for infants and children. For instructions concerning the installation of a child restraint system, see “Child restraint” on page 85 in this Section.**
- **Do not allow anyone to lean his/her head or any part of his/her body against the front door or the area of the seat from which the SRS side airbag deploys even if he/she is a child seated in the child restraint system. It is dangerous if the SRS side airbag inflates, and the impact of the deploying airbag could cause death or serious injury to the occupant.**

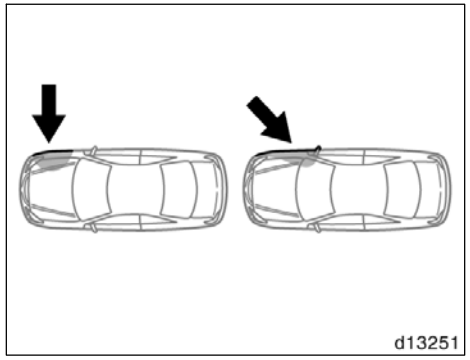

The SRS side airbag system may not activate if the vehicle is subjected to a collision from the side at certain angles, or a collision to the side of the vehicle body other than the passenger compartment as shown in the illustration.

The SRS side airbags are designed to inflate when the passenger compartment area suffers a severe impact from the side.

Always wear your seat belts properly.

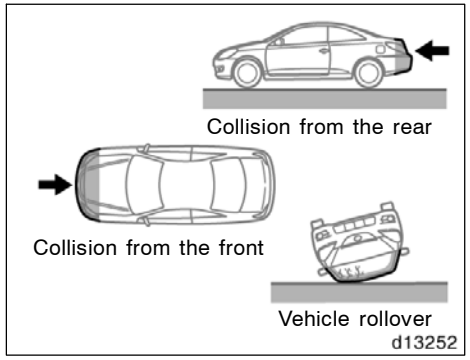

The SRS side airbags are not generally designed to inflate if the vehicle is involved in a front or rear collision, if it rolls over, or if it is involved in a low–speed side collision.

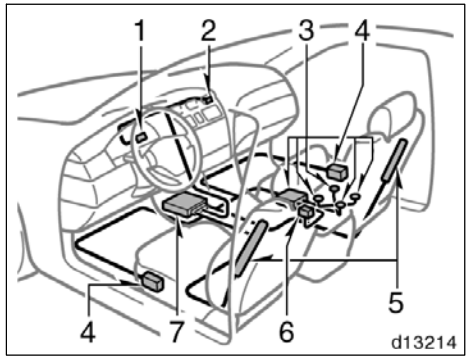

The SRS side airbag system consists mainly of the following components, and their locations are shown in the illustration.

1. SRS warning light
2. Front passenger occupant classification indicator light
3. Front passenger occupant classification system (ECU and sensors)
4. Side airbag sensors
5. Side airbag modules (airbag and inflator)
6. Front passenger’s seat belt buckle switch
7. Airbag sensor assembly

The SRS side airbag system is controlled by the airbag sensor assembly. The airbag sensor assembly consists of a safing sensor and airbag sensor.

In a severe side impact, the side airbag sensor triggers the side airbag inflators. At this time a chemical reaction in the inflators quickly fills the airbags with non–toxic gas to help restrain the lateral motion of the occupants.

When the airbags inflate, they produce a fairly loud noise and release some smoke and residue along with non–toxic gas. This does not indicate a fire. This smoke may remain inside the vehicle for some time, and may cause some minor irritation to the eyes, skin or breathing. Be sure to wash off any residue as soon as possible to prevent any potential skin irritation with soap and water. If you can safely exit from the vehicle, you should do so immediately.

Deployment of the airbags happens in a fraction of a second, so the airbags must inflate with considerable force. While the system is designed to reduce serious injuries, it may also cause minor burns or abrasions and swelling.

Front seats may be hot for several minutes, but the airbags themselves will not be hot. The airbags are designed to inflate only once.

⚠ CAUTION

SRS side airbags inflate with considerable force. To reduce the possibility of death or serious injury when they inflate, the driver and front passenger must:

- **Wear their seat belts properly.**
- **Remain properly seated with their backs upright and against the seats at all times.**

- **Do not allow anyone to lean against the front door when the vehicle is in use, since the side airbag could inflate with considerable speed and force. Otherwise, he/she may be killed or be seriously injured. Special care should be taken especially when you have a small child in the vehicle.**
- **Sit up straight and well back in the seat, distributing your weight evenly in the seat. Do not apply excessive weight to the outer side of the seats on vehicles with side airbags.**

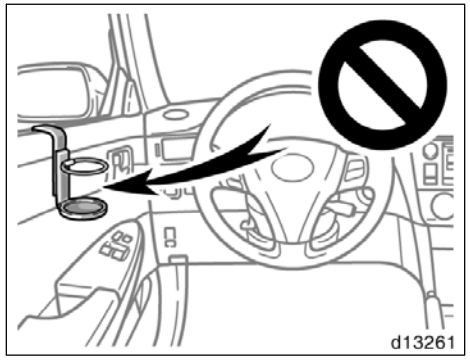

- **Do not attach a cup holder or any other device or object on or around the door. When the side airbag inflates, the cup holder or any other device or object will be thrown with great force or the side airbag may not activate correctly, resulting in death or serious injury. Likewise, the driver and front passenger should not hold objects in their arms or on their knees.**

- **Do not use seat accessories which cover the parts where the side airbags inflate. Such accessories may prevent the side airbags from activating correctly, causing death or serious injury.**
- **Do not modify or replace the seats or upholstery of the seats with side airbags. Such changes may prevent the side airbag system from activating correctly, disable the system or cause the side airbags to inflate accidentally, resulting in death or serious injury.**

Failure to follow these instructions can result in death or serious injury. Consult your Toyota dealer about any repair and modification.

If you wish to modify your vehicle for a person with physical disability, consult your Toyota dealer. It may dangerously interfere with the SRS side airbags operation.

NOTICE

Do not perform any of the following changes without consulting your Toyota dealer. Such changes can interfere with proper operation of the SRS side airbag system in some cases.

- ***Installation of electronic devices such as a mobile two-way radio, cassette tape player or compact disc player***
- ***Modification of the suspension system***
- ***Modification of the side structure of the passenger compartment***
- ***Repairs made on or near the console or front seat***

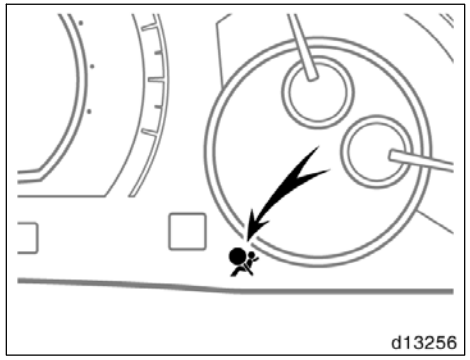

This indicator comes on when the engine switch is turned to the “ON” position. It goes off after about 6 seconds. This means the SRS side airbags are operating properly.

This warning light system monitors the airbag sensor assembly, front airbag sensors, side airbag sensors, driver’s seat position sensor, driver’s seat belt buckle switch, front passenger occupant classification system and indicator light, front passenger’s seat belt buckle switch, seat belt pretensioner assemblies, inflators, warning light, interconnecting wiring and power sources. (For details, see “Service reminder indicators and warning buzzers” on page 133 in Section 1–6.)

If any of the following conditions occurs, this indicates a malfunction of the airbags or seat belt pretensioners. Contact your Toyota dealer as soon as possible.

- When the engine switch is turned to the “ON” position, the light does not come on or remains on for more than 6 seconds.
- The light comes on or starts flashing while driving.

The SRS warning light will come on and front passenger occupant classification indicator light will indicate “OFF” if there is a malfunction in the front passenger occupant classification system.

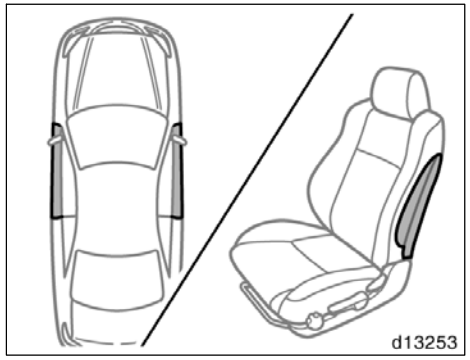

In the following cases, contact your Toyota dealer as soon as possible:

- Any of the SRS side airbags have been inflated.
- The portion of the doors (shaded in the illustration) was involved in an accident that was not severe enough to cause the SRS side airbags to inflate.
- The surface of the seats with the SRS side airbag (shaded in the illustration) is scratched, cracked, or otherwise damaged.

NOTICE
Do not disconnect the battery cables before contacting your Toyota dealer.

—SRS side airbags and curtain shield airbags

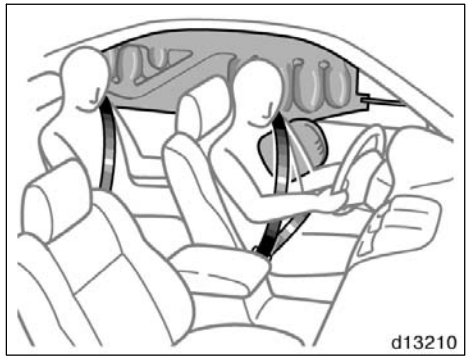

The SRS (Supplemental Restraint System) side airbags and curtain shield airbags are designed to provide further protection for the driver, front passenger and rear outside passengers in addition to the primary safety protection provided by the seat belts.

In response to a severe side impact, the SRS side airbags and curtain shield airbags work with the seat belts to help reduce injury by inflating. The SRS side airbags help reduce injuries mainly to the driver’s or front passenger’s chest and the SRS curtain shield airbags help reduce injuries mainly to the driver’s, front passenger’s or rear outside passenger’s head.

The SRS side airbag on the passenger seat will not activate if there is no passenger sitting in the front passenger seat. However, the side airbag on the passenger seat may deploy if luggage is put in the seat, or the seat belt is buckled up regardless of the presence of the occupant in the seat. (As for the front passenger occupant classification system, see “—Front passenger occupant classification system” on page 81 in this Section.)

The SRS curtain shield airbag on the passenger side are activated even with no passenger in the front seat or rear outside seat.

The SRS curtain shield airbags may activate even when the side airbags are not activated.

Always wear your seat belt properly.

⚠ CAUTION

- **The SRS side airbag and curtain shield airbag system is designed only as a supplement to the primary protection of the driver, front passenger and rear outside passenger seat belt systems. To ensure maximum protection in an accident, the driver and all passengers in the vehicle must wear their seat belts properly. Wearing a seat belt properly during an accident reduces the chances of death or serious injury or being thrown out of the vehicle. For instructions and precautions concerning the seat belt system, see “Seat belts” on page 52 in this Section.**

- **Do not allow anyone to lean his/her head or any part of his/her body against the door or the area of the seat, pillar, rear pillar or roof side rail from which the SRS side airbag and curtain shield airbag deploy even if he/she is a child seated in the child restraint system. It is dangerous if the SRS side airbag and curtain shield airbag inflate, and the impact of the deploying airbag could cause death or serious injury to the occupant.**

- **Improperly seated and/or restrained infants and children can be killed or seriously injured by the deploying airbags. An infant or child who is too small to use a seat belt should be properly secured using a child restraint system. Toyota strongly recommends that all infants and children be placed in the rear seats of the vehicle and properly restrained. The rear seats are the safest for infants and children. For instructions concerning the installation of a child restraint system, see “Child restraint” on page 85 in this Section.**

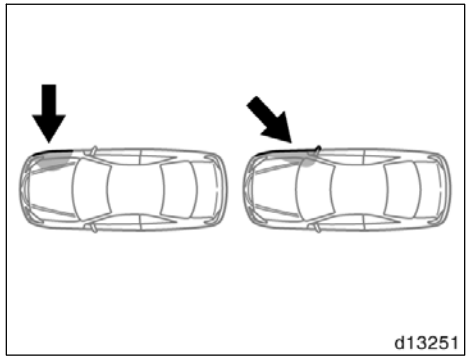

The SRS side airbag and curtain shield airbag system may not activate if the vehicle is subjected to a collision from the side at certain angles, or a collision to the side of the vehicle body other than the passenger compartment as shown in the illustration.

The SRS side airbags and curtain shield airbags are designed to inflate when the passenger compartment area suffers a severe impact from the side.

Always wear your seat belts properly.

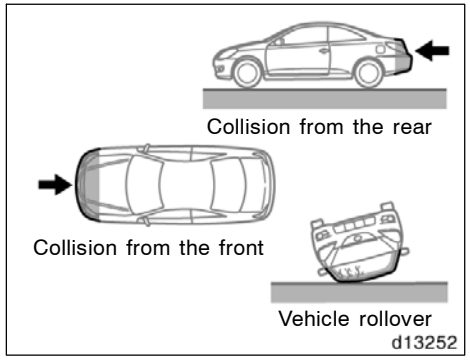

The SRS side airbags and curtain shield airbags are not generally designed to inflate if the vehicle is involved in a front or rear collision, if it rolls over, or if it is involved in a low–speed side collision.

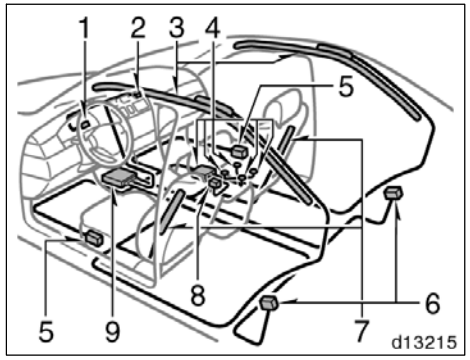

The SRS side airbag and curtain shield airbag system consists mainly of the following components, and their locations are shown in the illustration.

1. SRS warning light
2. Front passenger occupant classification indicator light
3. Curtain shield airbag modules (airbag and inflator)
4. Front passenger occupant classification system (ECU and sensors)
5. Side and curtain shield airbag sensors
6. Curtain shield airbag sensors
7. Side airbag modules (airbag and inflator)

8. Front passenger’s seat belt buckle switch
9. Airbag sensor assembly

The SRS side airbag and curtain shield airbag system is controlled by the airbag sensor assembly. The airbag sensor assembly consists of a safing sensor and airbag sensor.

In a severe side impact, the side and curtain shield airbag sensor and/or the curtain shield airbag sensor trigger(s) the side airbag inflators and/or the curtain shield airbag inflators. At this time a chemical reaction in the inflators quickly fills the airbags with non–toxic gas to help restrain the lateral motion of the occupants.

When the airbags inflate, they produce a fairly loud noise and release some smoke and residue along with non–toxic gas. This does not indicate a fire. This smoke may remain inside the vehicle for some time, and may cause some minor irritation to the eyes, skin or breathing. Be sure to wash off any residue as soon as possible to prevent any potential skin irritation with soap and water. If you can safely exit from the vehicle, you should do so immediately.

Deployment of the airbags happens in a fraction of a second, so the airbags must inflate with considerable force. While the system is designed to reduce serious injuries, it may also cause minor burns or abrasions and swelling.

Front seats as well as parts of the front and rear pillars, and roof side rail may be hot for several minutes, but the airbags themselves will not be hot. The airbags are designed to inflate only once.

⚠ CAUTION

SRS side airbags and curtain shield airbags inflate with considerable force. To reduce the possibility of death or serious injury when they inflate, the driver, front passenger and rear outside passengers must:

- **Wear their seat belts properly.**
- **Remain properly seated with their backs upright and against the seats at all times.**

- **Do not allow anyone to lean against the door when the vehicle is in use, since the side airbag and curtain shield airbag could inflate with considerable speed and force. Otherwise, he/she may be killed or seriously injured. Special care should be taken especially when you have a small child in the vehicle.**
- **Sit up straight and well back in the seat, distributing your weight evenly in the seat. Do not apply excessive weight to the outer side of the seats with a side airbag, and to the front pillar, rear pillar and roof side rail with a curtain shield airbag.**

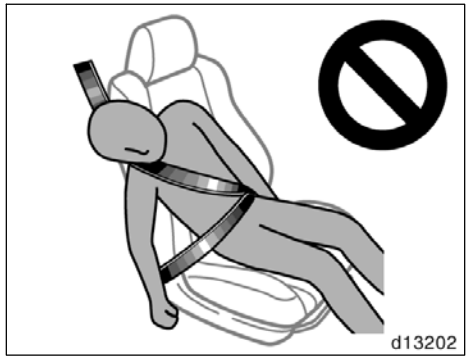

- **Do not allow anyone to get his/her head closer to the area where the side airbag and curtain shield airbag inflate, since these airbags could inflate with considerable speed and force. Otherwise, he/she may be killed or seriously injured. Special care should be taken especially when you have a small child in the vehicle.**

- **Do not allow anyone to kneel on the passenger seat, facing the passenger’s side door, since the side airbag and curtain shield airbag could inflate with considerable speed and force. Otherwise, he/she may be killed or seriously injured. Special care should be taken especially when you have a small child in the vehicle.**

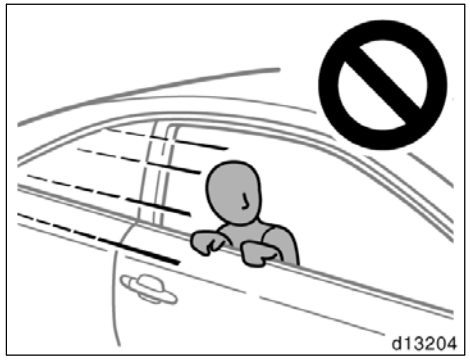

- **Do not allow anyone to get his/her head or hands out of windows since the curtain shield airbags could inflate with considerable speed and force. Otherwise, he/she may be killed or seriously injured. Special care should be taken especially when you have a small child in the vehicle.**

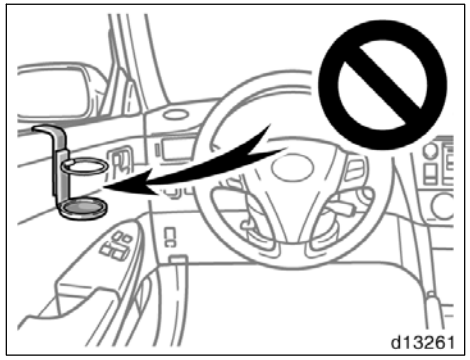

- **Do not attach a cup holder or any other device or object on or around the door. When the side airbag inflates, the cup holder or any other device or object will be thrown with great force or the side airbag may not activate correctly, resulting in death or serious injury. Likewise, the driver and front passenger should not hold objects in their arms or on their knees.**

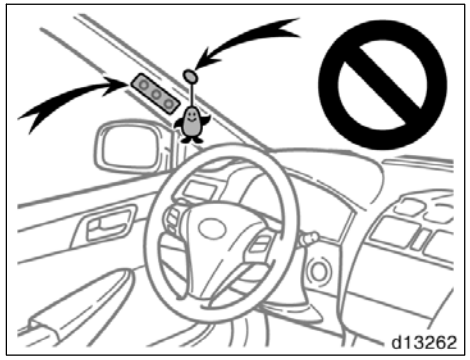

- **Do not attach a microphone or any other device or object around the area where the curtain shield airbag activates such as on the windshield glass, side door glass, front and rear pillars, roof side rail and assist grips. When the curtain shield airbag inflates, the microphone or other device or object will be thrown away with great force or the curtain shield airbag may not activate correctly, resulting in death or serious injury.**

- **Do not hook a hanger, heavy or sharp pointed objects on the coat hook. If the curtain shield airbag inflates, those items will be thrown away with great force or the curtain shield airbag may not activate correctly, resulting in death or serious injury. When you hang clothes, hang them on the coat hook directly.**
- **Do not use seat accessories which cover the parts where the side airbags inflate. Such accessories may prevent the side airbags from activating correctly, causing death or serious injury.**
- **Do not modify or replace the seats or upholstery of the seats with side airbags. Such changes may prevent the side airbag system from activating correctly, disable the system or cause the side airbags to inflate accidentally, resulting in death or serious injury.**

- **Do not disassemble or repair the front and rear pillars and roof side rail containing the curtain shield airbags. Such changes may disable the system or cause the curtain shield airbags to inflate accidentally, resulting in death or serious injury.**

Failure to follow these instructions can result in death or serious injury. Consult your Toyota dealer about any repair and modification.

If you wish to modify your vehicle for a person with physical disability, consult your Toyota dealer. It may dangerously interfere with the SRS side airbags and curtain shield airbags operation.

NOTICE

Do not perform any of the following changes without consulting your Toyota dealer. Such changes can interfere with proper operation of the SRS side airbag and curtain shield airbag system in some cases.

- ***Installation of electronic devices such as a mobile two-way radio, cassette tape player or compact disc player***
- ***Modification of the suspension system***
- ***Modification of the side structure of the passenger compartment***
- ***Repairs made on or near the console or front seat***

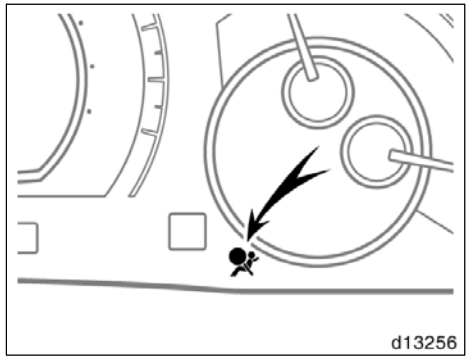

This indicator comes on when the engine switch is turned to the “ON” position. It goes off after about 6 seconds. This means the SRS side airbags and curtain shield airbags are operating properly.

This warning light system monitors the airbag sensor assembly, front airbag sensors, side and curtain shield airbag sensors, curtain shield airbag sensors, driver’s seat position sensor, driver’s seat belt buckle switch, front passenger occupant classification system and indicator light, front passenger’s seat belt buckle switch, seat belt pretensioner assemblies, inflators, warning light, interconnecting wiring and power sources. (For details, see “Service reminder indicators and warning buzzers” on page 133 in Section 1–6.)

If any of the following conditions occurs, this indicates a malfunction of the airbags or seat belt pretensioners. Contact your Toyota dealer as soon as possible.

- When the engine switch is turned to the “ON” position, the light does not come on or remains on for more than 6 seconds.
- The light comes on or starts flashing while driving.

The SRS warning light will come on and front passenger occupant classification indicator light will indicate “OFF” if there is a malfunction in the front passenger occupant classification system.

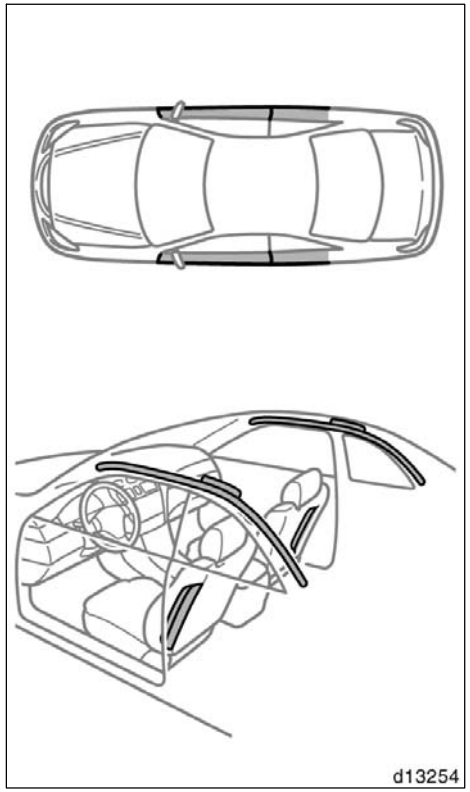

In the following cases, contact your Toyota dealer as soon as possible:

- Any of the SRS side airbags and curtain shield airbags have been inflated.
- The portion of the doors (shaded in the illustration) was involved in an accident that was not severe enough to cause the SRS side airbags and curtain shield airbags to inflate.
- The surface of the seats with the SRS side airbag (shaded in the illustration) is scratched, cracked, or otherwise damaged.
- The portion of the front pillars, rear pillars or roof side rail garnishes (padding) containing the curtain shield airbags inside (shaded in the illustration) is scratched, cracked, or otherwise damaged.

NOTICE

Do not disconnect the battery cables before contacting your Toyota dealer.

—Front passenger occupant classification system

Your vehicle is equipped with a front passenger occupant classification system. This system detects the conditions 1—4 in the table on page 83 and based on these conditions activates or deactivates the following systems;

- Front passenger airbag
- Side airbag on the front passenger seat
- Front passenger’s seat belt pretensioner

The system monitors the weight and load on the front passenger seat, and the seat belt buckle switch to determine conditions 1—4.

In order for the system to detect the conditions correctly, do not do any of the following:

- Apply a heavy load to the front passenger seat or equipment (e.g. seatback pocket).
- Attach a commercial seatback table, etc. to the front passenger seat seatback.
- Put weight on the front passenger seat by putting your hands or feet on the seatback from the rear passenger seat.

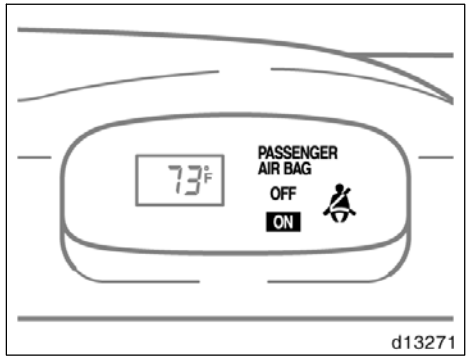

The front passenger occupant classification indicator light indicates the actuation of the front passenger airbag, side airbag on the front passenger seat and front passenger’s seat belt pretensioner.

The indicator light will indicate “OFF” when the engine switch is in the “ON” position with the condition 2 in the table shown below.

If the front passenger occupant classification system determines that a person of adult size sits in the front passenger seat but the “OFF” indicator is illuminated, one of the following is likely to have occurred:

- A rear passenger lifts the front passenger seat cushion with their legs.
- Objects are placed under the front passenger seat.
- The front passenger seatback is in contact with the rear seat.

To ensure the system correctly detects an adult sitting in the front passenger seat, make sure the above do not occur.

Make sure that the “ON” indicator is illuminated when an adult is seated in the front passenger seat. If the “OFF” indicator is illuminated, ask the passenger to sit up straight, well back in the seat, and with the seat belt worn correctly. If the “OFF” indicator still remains illuminated, either ask the passenger to move to the rear seat, or if that is not possible, move the front passenger seat fully rearward.

The front passenger occupant classification indicator light will indicate “ON” and “OFF” when the engine switch is turned to the “ON” position. After about four seconds, it will go off. After that, the front passenger occupant classification system operates and judges whether to indicate “ON” or “OFF”.

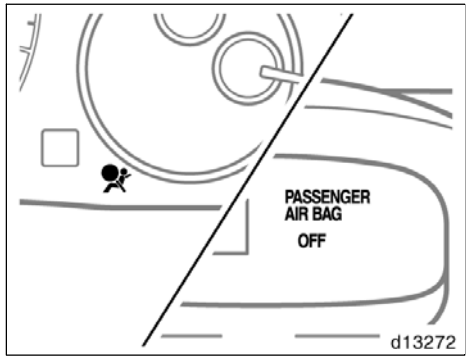

The SRS warning light will come on and front passenger occupant classification indicator light will indicate “OFF” if there is a malfunction in the front passenger occupant classification system.

Condition and operation in the front passenger occupant classification system

Condition detected by the front passenger occupant classification system	Indicator/warning light			Devices			
	Front passenger occupant classification indicator light	SRS warning light	Front passenger’s seat belt reminder light	Front passenger airbag	Side airbag on the front passenger seat	Curtain shield airbag in the front passenger side	Front passenger’s seat belt pretensioner
1. Adult*1	“ON”	Off	Flashing*4	Activated			
2. Child*2 or child restraint system*3	“OFF”*5	Off	Flashing*4	Deactivated		Activated	Activated
3. Unoccupied	Not illuminated	Off	Off	Deactivated			Deactivated
4. There is a malfunction in the system	“OFF”	On	Off	Deactivated			Activated

*1: The system judges a person of adult size as an adult. When a smaller adult sits in the front passenger seat, the system may recognize him/her as a child depending on his/her physique and posture.
*2: When a larger child who has outgrown a child restraint system sits in the front passenger seat, the system may recognize him/her as an adult depending on his/her physique or posture.
*3: Never install a rear–facing child restraint system on the front passenger seat. A forward–facing child restraint system should only be installed on the front passenger seat when it is unavoidable. (See “Child restraint” on page 85 in this Section as for installing the child restraint system.)
*4: In the event the front passenger does not wear a seat belt.
*5: In case the indicator is not illuminated, see “Child restraint” on page 85 as for installing the child restraint system properly.

⚠ CAUTION

To avoid potential death or serious injury when the front passenger occupant classification system does not detect the conditions correctly, observe the following.

- **Do not recline the front passenger seatback so far that it touches a rear seat. This may cause the “OFF” indicator to be illuminated, which indicates that the passenger’s airbags will not deploy in the event of a severe accident. If the seatback touches the rear seat, return the seatback to a position where it does not touches the rear seat.**

  Keep the front passenger seatback as upright as possible when the vehicle is moving. Reclining the seatback excessively may lessen the effectiveness of the seat belt system.

- **Make sure the front passenger occupant classification indicator light indicates “ON” when using the seat belt extender for the front passenger seat. If the indicator light indicates “OFF”, disconnect the extender tongue from the seat belt buckle, then reconnect the seat belt. Reconnect the seat belt extender after making sure the indicator light indicates “ON”. If you use the seat belt extender while the indicator light indicates “OFF”, the front passenger airbag and side airbag on the front passenger side may not activate correctly, which could cause death or serious injury in the event of collision.**

- **If an adult sits in the front passenger seat, the occupant classification indicator light should indicate “ON”. If the “OFF” indicator is illuminated, ask the passenger to sit up straight, well back in the seat, feet on the floor, and with the seat belt worn correctly. If the “OFF” indicator still remains illuminated, either ask the passenger to move to the rear seat, or if that is not possible, move the front passenger seat fully rearward.**
- **Wear the seat belt properly.**
- **Make sure the front passenger’s seat belt tab has not been left inserted into the buckle before someone sits in the front passenger seat.**
- **Do not apply a heavy load to the front seat or equipment (e.g. seatback pocket).**
- **Do not put weight on the front passenger seat by putting your hands or feet on the front passenger seat seatback from the rear passenger seat.**

- **Do not let a rear passenger lift the front passenger seat with their feet or press on the seatback with their legs.**
- **Do not put objects under the front passenger seat.**
- **Child restraint systems installed on the rear seat should not contact the front seatbacks.**
- **When it is unavoidable to install the forward–facing child restraint system on the front passenger seat, install the child restraint system on the front passenger seat in the proper order. (As for the installation order, see “—Installation with seat belt” on page 88 in this Section.)**
- **Do not remove the front seats.**
- **Do not kick the front passenger seat or subject it to severe impact. Otherwise, the SRS warning light may come on to indicate a malfunction of the detection system. In this case, contact your Toyota dealer immediately.**

The front passenger occupant classification indicator light may indicate “ON” (the front passenger airbag and side airbag on the front passenger seat may deploy) even if observing the above cautions, when a child sits in, or a forward–facing child restraint system is installed on the front passenger seat. Refer to all the cautions in “SRS airbags” on page 61 and “Child restraint” on page 85 in this Section.

Child restraint—
—Child restraint precautions

Toyota strongly urges the use of appropriate child restraint systems for children.

The laws of all 50 states in the U.S.A. and Canada now require the use of a child restraint system.

Your vehicle conforms to SAEJ1819.

If a child is too large for a child restraint system, the child should sit in the rear seat and must be restrained using the vehicle’s seat belt. See “Seat belts” on page 52 in this Section for details.

⚠ CAUTION

- **For effective protection in automobile accidents and sudden stops, a child must be properly restrained, using a seat belt or child restraint system depending on the age and size of the child. Holding a child in your arms is not a substitute for a child restraint system. In an accident, the child can be crushed against the windshield, or between you and the vehicle’s interior.**

- Toyota strongly urges use of a proper child restraint system which conforms to the size of the child, installed on the rear seat. According to accident statistics, the child is safer when properly restrained in the rear seat than in the front seat.
- Never install a rear–facing child restraint system on the front passenger seat even if the front passenger occupant classification indicator light indicates “OFF”. In the event of an accident, the force of the rapid inflation of the front passenger airbag can cause death or serious injury to the child if the rear–facing child restraint system is installed on the front passenger seat.

- A forward–facing child restraint system should be allowed to be installed on the front passenger seat only when it is unavoidable. Always move the seat as far back as possible even if the front passenger occupant classification indicator light indicates “OFF”, because the front passenger airbag could inflate with considerable speed and force. Otherwise, the child may be killed or seriously injured.
- Do not allow the child to lean his/her head or any part of his/her body against the door or the area of the seat, front or rear pillar or roof side rail from which the side airbags or curtain shield airbags deploy even if the child is seated in the child restraint system. It is dangerous if the side airbag and curtain shield airbag inflate, and the impact could cause death or serious injury to the child.

- Do not use the seat belt extender when installing a child restraint system on the front or rear passenger seat. If installing a child restraint system with the seat belt extender connected to the seat belt, the seat belt will not securely hold the child restraint system, which could cause death or serious injury to the child or other passengers in the event of collision.
- Make sure you have complied with all installation instructions provided by the child restraint manufacturer and that the system is properly secured. If it is not secured properly, it may cause death or serious injury to the child in the event of a sudden stop or accident.

—Child restraint system

A child restraint system for a small child or baby must itself be properly restrained on the seat with the lap portion of the lap/shoulder belt. You must carefully consult the manufacturer’s instructions which accompany the child restraint system.

To provide proper restraint, use a child restraint system following the manufacturer’s instructions about the appropriate age and size of the child for the child restraint system.

Install the child restraint system correctly following the instructions provided by its manufacturer. General directions are also provided under the following illustrations.

The child restraint system should be installed on the rear seat. According to accident statistics, the child is safer when properly restrained in the rear seat than in the front seat.

When not using the child restraint system, keep it secured with the seat belt or place it in the trunk or somewhere other than the passenger compartment. This will prevent it from injuring passengers in the event of a sudden stop or accident.

—Types of child restraint system

Child restraint systems are classified into the following 3 types depending on the child’s age and size.

(A) Infant seat
(B) Convertible seat
(C) Booster seat

Install the child restraint system following the instructions provided by its manufacturer.

Your vehicle has anchor brackets for securing the top strap of a child restraint system.

For instructions about how to use the anchor bracket, see “—Using a top strap” on page 98 (for coupe) and 100 (for convertible) in this Section.

The child restraint lower anchorages approved for your vehicle may also be used. See “—Installation with child restraint lower anchorages” on page 102 (for coupe) and 103 (for convertible) in this Section.

(A) Infant seat

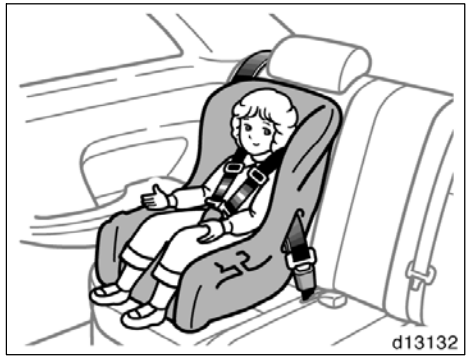

(B) Convertible seat

—Installation with seat belt

(C) Booster seat

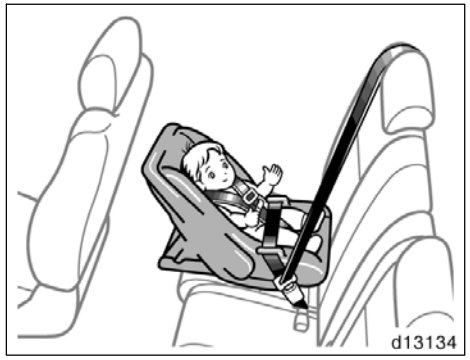

(A) INFANT SEAT INSTALLATION

An infant seat must be used in rear–facing position only.

⚠ CAUTION

- Never install a rear–facing child restraint system on the front passenger seat even if the front passenger occupant classification indicator light indicates “OFF”. In the event of an accident, the impact of the rapid inflation of the front passenger airbag could cause death or serious injury to the child if the rear–facing child restraint system is installed on the front passenger seat.

- **Do not install a child restraint system on the rear seat if it interferes with the lock mechanism of the front seats. Otherwise, the child or front seat occupant(s) may be killed or seriously injured in case of sudden braking or a collision.**
- **If the driver’s seat position does not allow sufficient space for safe installation, install the child restraint system on the rear right seat. Child restraint system installed on the rear seat should not contact the front seatbacks.**

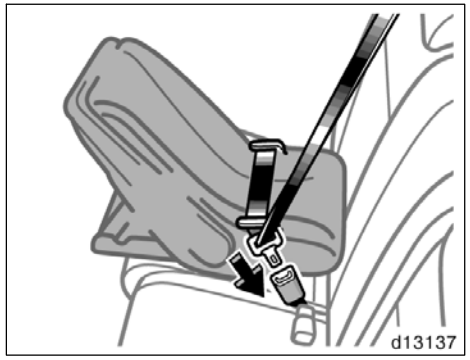

To install the infant seat:

1. Run the lap and shoulder belt through or around the infant seat following the instructions provided by its manufacturer and insert the tab into the buckle taking care not to twist the belt. Keep the lap portion of the belt tight.

⚠ CAUTION

- **After inserting the tab, make sure the tab and buckle are locked and that the lap and shoulder portions of the belt are not twisted.**
- **Do not insert coins, clips, etc. in the buckle as this may prevent your child from properly latching the tab and buckle.**
- **If the seat belt does not function normally, it cannot protect your child from death or serious injury. Contact your Toyota dealer immediately. Do not install the child restraint system on the seat until the seat belt is fixed.**

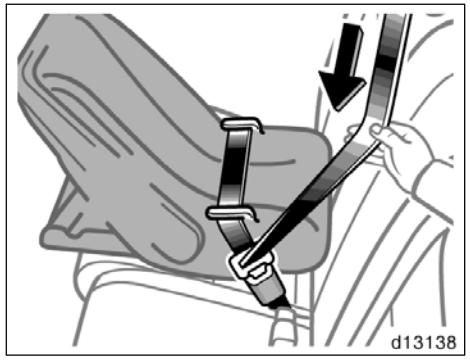

2. Fully extend the shoulder belt to put it in the lock mode. When the belt is then retracted even slightly, it cannot be extended.

To hold the infant seat securely, make sure the belt is in the lock mode before letting the belt retract.

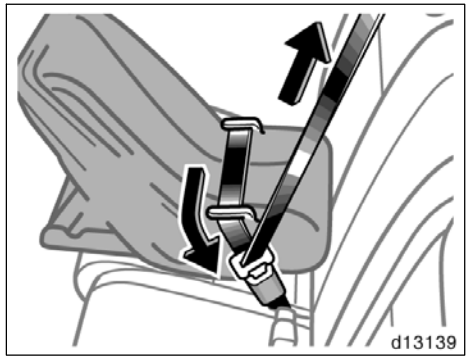

3. While pressing the infant seat firmly against the seat cushion and seatback, let the shoulder belt retract as far as it will go to hold the infant seat securely.

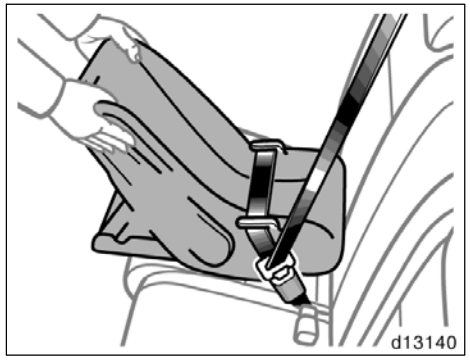

⚠ CAUTION

Push and pull the child restraint system in different directions to be sure it is secure. Follow all the installation instructions provided by its manufacturer.

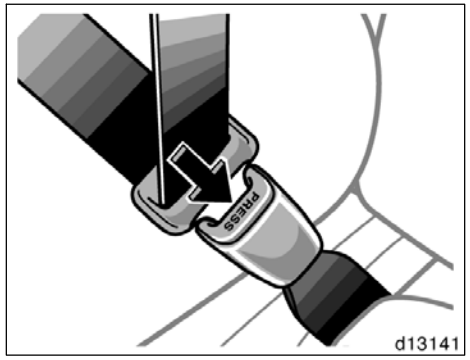

To remove the infant seat:

Press the buckle release button and allow the belt to retract completely. The belt will move freely again and be ready to work for an adult or older child passenger.

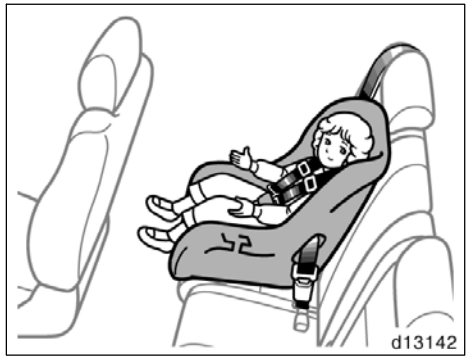

(B) CONVERTIBLE SEAT INSTALLATION

A convertible seat must be used in forward–facing or rear–facing position depending on the age and size of the child. When installing, follow the manufacturer’s instructions about the applicable age and size of the child as well as directions for installing the convertible seat.

Install the convertible seat on the front passenger seat only when it is unavoidable. Your vehicle is equipped with a front passenger occupant classification system. In order to activate the occupant classification system correctly, install the forward–facing child restraint system on the front passenger seat in the following order:

1. Turn the engine switch to the “ON” position.
2. Move the front passenger seat to the rearward position.
3. Put the convertible seat on the front passenger seat without putting your weight on the front passenger seat.
4. Insert the seat belt tab into the seat belt buckle.
5. Fully extend the shoulder belt to put it in the lock mode. When the belt is then retracted even slightly, it cannot be extended. To hold the seat securely, make sure the belt is in the lock mode before letting the belt retract.

6. While pressing the convertible seat firmly against the seat cushion and seatback, let the shoulder belt retract as far as it will go to hold the convertible seat securely.

⚠ CAUTION

Push and pull the child restraint system in different directions to be sure it is secure. Follow all the installation instructions provided by its manufacturer.

7. Put a child on the convertible seat and secure the child, complying with the instructions provided by the child restraint system manufacturer.

The occupant classification indicator light should indicate “OFF” when the engine switch is “ON” and the child is in the child restraint system after following these procedures. The “OFF” indicator indicates the SRS front passenger airbag and side airbag on the passenger side will not deploy. If the indicator light indicates “ON”, remove the child restraint system and reinstall it with the engine switch in the “ACC” or “LOCK” position. If the indicator light still indicates “ON” when the engine switch is turned to the “ON” position, then the SRS front passenger airbag and side airbag on the passenger side may deploy in an accident. Do not drive the vehicle in this condition. Remove the child restraint system and contact your Toyota dealer.

⚠ CAUTION

- **Never install a rear–facing child restraint system on the front passenger seat. A forward–facing child restraint system should only be installed on the front passenger seat when unavoidable. If you must install the child restraint system on the front passenger seat, put the seat in its most rearward position, and install the forward–facing child restraint system in the proper order. Otherwise, the front passenger occupant classification system can not detect the presence of the child restraint system and the front passenger airbag and side airbag on the front passenger seat could deploy.**

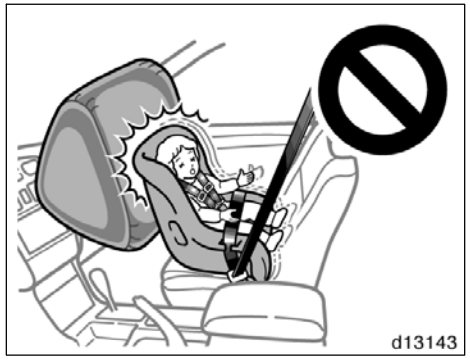

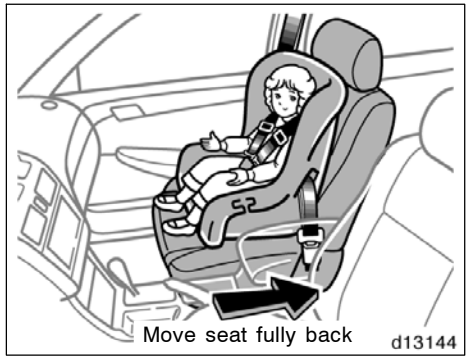

- **Do not allow the child to lean his/her head or any part of his/her body against the door or the area of the seat, front or rear pillar or roof side rail from which the side airbags or curtain shield airbags deploy even if the child is seated in the child restraint system. It is dangerous if the side airbag and/or curtain shield airbag inflate, and the impact could cause death or serious injury to the child.**

- **Never install a rear–facing child restraint system on the front passenger seat even if the front passenger occupant classification indicator light indicates “OFF”. In the event of an accident, the impact of the rapid inflation of the front passenger airbag could cause death or serious injury to the child if the rear–facing child restraint system is installed on the front passenger seat.**

- **A forward–facing child restraint system should be allowed to be installed on the front passenger seat only when it is unavoidable. Always move the seat as far back as possible even if the front passenger occupant classification indicator light indicates “OFF”, because the front passenger airbag could inflate with considerable speed and force. Otherwise, the child may be killed or seriously injured.**

- **Do not install a child restraint system on the rear seat if it interferes with the lock mechanism of the front seats. Otherwise, the child or front seat occupant(s) may be killed or seriously injured in case of sudden braking or a collision.**
- **If the driver’s seat position does not allow sufficient space for safe installation, install the child restraint system on the rear right seat. Child restraint system installed on the rear seat should not contact the front seatbacks.**

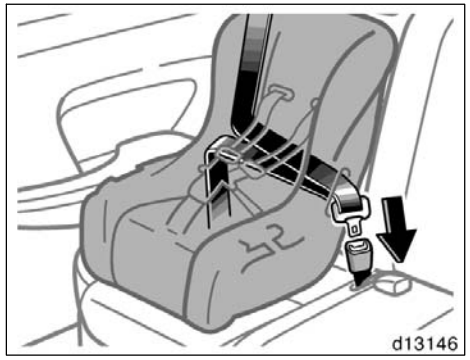

To install the convertible seat:

1. Run the lap and shoulder belt through or around the convertible seat following the instructions provided by its manufacturer and insert the tab into the buckle taking care not to twist the belt. Keep the lap portion of the belt tight.

⚠ CAUTION

- **After inserting the tab, make sure the tab and buckle are locked and that the lap and shoulder portions of the belt are not twisted.**
- **Do not insert coins, clips, etc. in the buckle as this may prevent your child from properly latching the tab and buckle.**
- **If the seat belt does not function normally, it cannot protect your child from death or serious injury. Contact your Toyota dealer immediately. Do not install the child restraint system on the seat until the seat belt is fixed.**

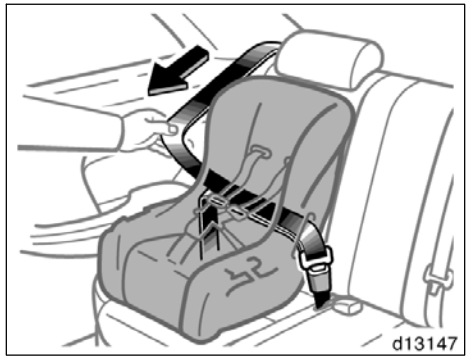

2. Fully extend the shoulder belt to put it in the lock mode. When the belt is then retracted even slightly, it cannot be extended.

To hold the convertible seat securely, make sure the belt is in the lock mode before letting the belt retract.

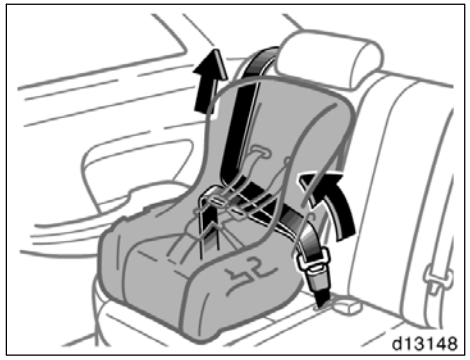

3. While pressing the convertible seat firmly against the seat cushion and seatback, let the shoulder belt retract as far as it will go to hold the convertible seat securely.

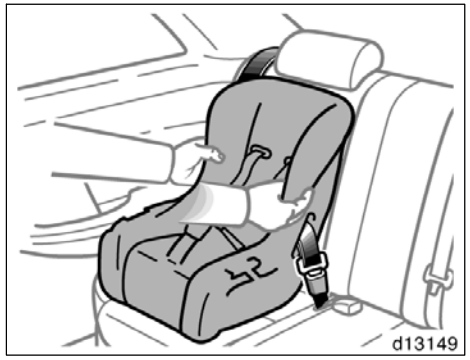

⚠ CAUTION

Push and pull the child restraint system in different directions to be sure it is secure. Follow all the installation instructions provided by its manufacturer.

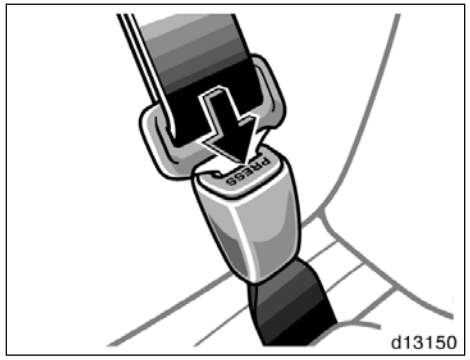

To remove the convertible seat:

Press the buckle release button and allow the belt to retract completely. The belt will move freely again and be ready to work for an adult or older child passenger.

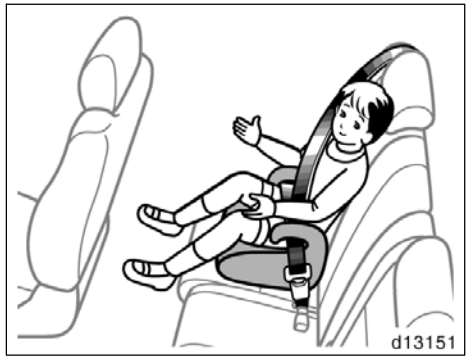

(C) BOOSTER SEAT INSTALLATION

A booster seat must be used in forward–facing position only.

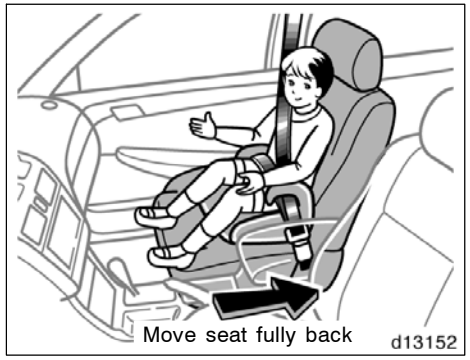

⚠ CAUTION

- **A forward–facing child restraint system should be allowed to be installed on the front passenger seat only when it is unavoidable. Always move the seat as far back as possible even if the front passenger occupant classification indicator light indicates “OFF”, because the front passenger airbag could inflate with considerable speed and force. Otherwise, the child may be killed or seriously injured.**

- **Do not allow the child to lean his/her head or any part of his/her body against the door or the area of the seat, front or rear pillar or roof side rail from which the side airbags or curtain shield airbags deploy even if the child is seated in the child restraint system. It is dangerous if the side airbag and/or curtain shield airbag inflate, and the impact could cause death or serious injury to the child.**

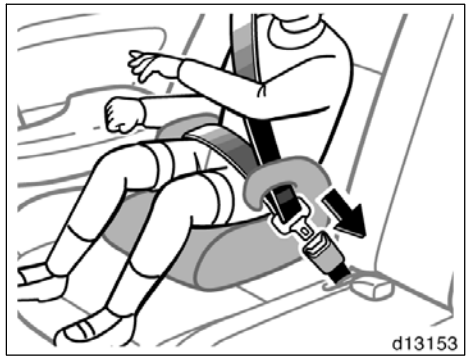

To install the booster seat:

Sit the child on a booster seat. Run the lap and shoulder belt through or around the booster seat and across the child following the instructions provided by its manufacturer and insert the tab into the buckle taking care not to twist the belt.

Make sure the shoulder belt is correctly across the child’s shoulder and that the lap belt is positioned as low as possible on the child’s hips. See “Seat belts” on page 52 in this Section for details.

⚠ CAUTION

- **Always make sure the shoulder belt is positioned across the center of child’s shoulder. The belt should be kept away from child’s neck, but not falling off child’s shoulder. Otherwise, the child may be killed or seriously injured in case of sudden braking or a collision.**
- **Both high–positioned lap belts and loose–fitting belts could cause death or serious injuries due to sliding under the lap belt during a collision or other unintended event. Keep the lap belt positioned as low on a child’s hips as possible.**
- **For child’s safety, do not place the shoulder belt under child’s arm.**
- **After inserting the tab, make sure the tab and buckle are locked and that the lap and shoulder portions of the belt are not twisted.**
- **Do not insert coins, clips, etc. in the buckle as this may prevent your child from properly latching the tab and buckle.**

- **If the seat belt does not function normally, it cannot protect your child from death or serious injury. Contact your Toyota dealer immediately. Do not install the child restraint system on the seat until the seat belt is fixed.**

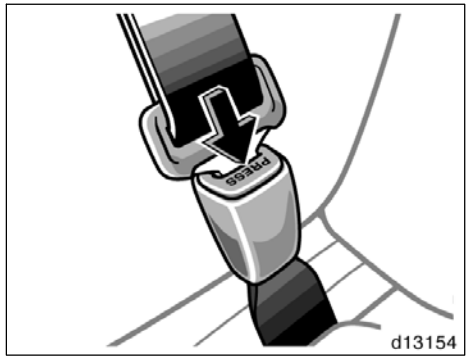

To remove the booster seat:

Press the buckle release button and allow the belt to retract.

—Using a top strap (coupe)

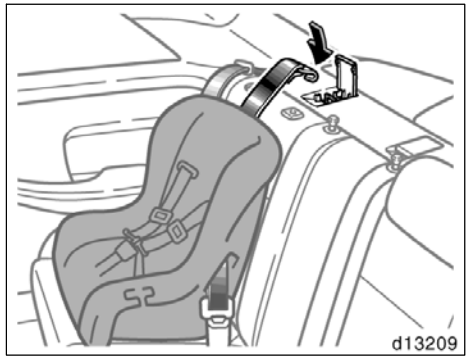

Follow the procedure below for a child restraint system that requires the use of a top strap.

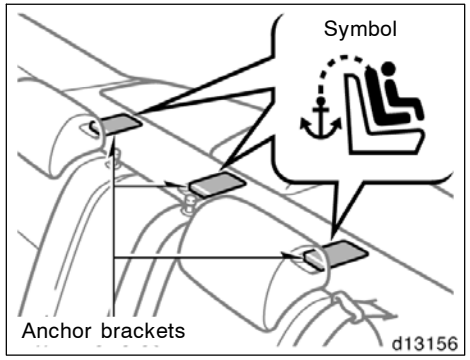

Use the anchor brackets on the package tray behind the rear seat to attach the top strap.

Anchor brackets are installed for each rear seating position.

This symbol indicates the locations of the anchor brackets.

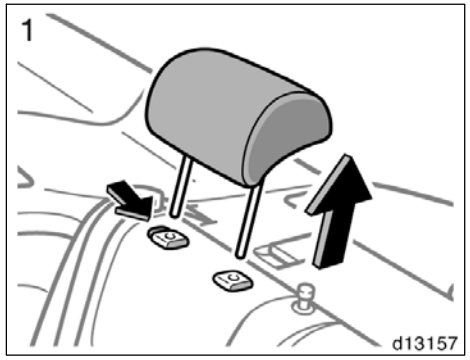

TO USE THE ANCHOR BRACKET:

1. Outside anchor brackets only— Remove the head restraint.

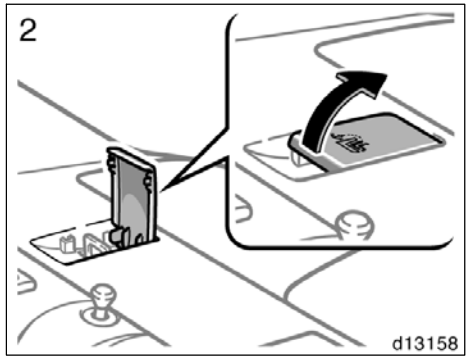

2. Open the lid of the anchor bracket.

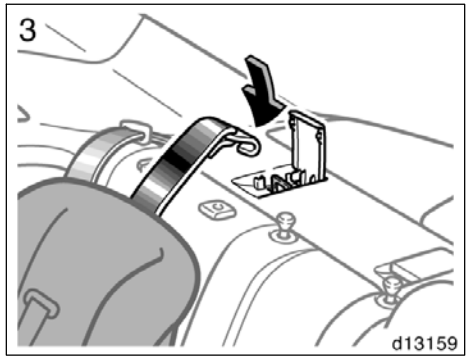

3. **Securely fasten the child restraint system with the seat belt.**

   Latch the hook onto the anchor bracket and tighten the top strap.

For instructions to install the child restraint system, see “Child restraint” on page 85 in this Section.

⚠ CAUTION

Make sure the top strap is securely latched, and check that the child restraint system is secure by pushing and pulling it in different directions. Follow all the installation instructions provided by its manufacturer.

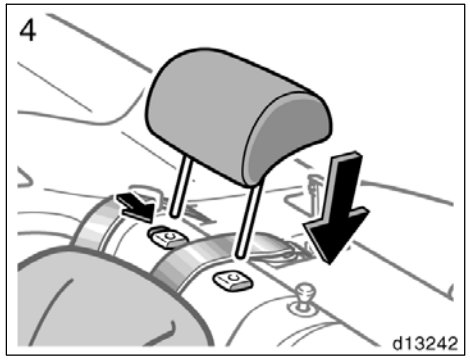

4. **Outside anchor brackets only—Replace the head restraint.**

—Using a top strap (convertible)

Follow the procedure below for a child restraint system that requires the use of a top strap.

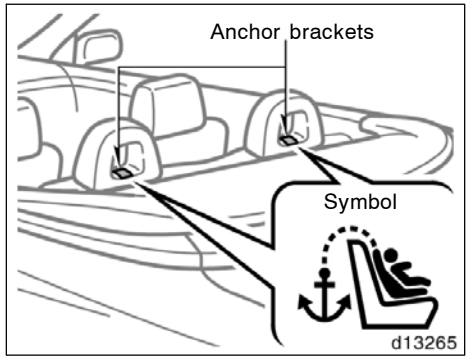

Use the anchor brackets on the back of the rear seat head restraints to attach the top strap.

Anchor brackets are installed for each rear seating position.

This symbol indicates the locations of the anchor brackets.

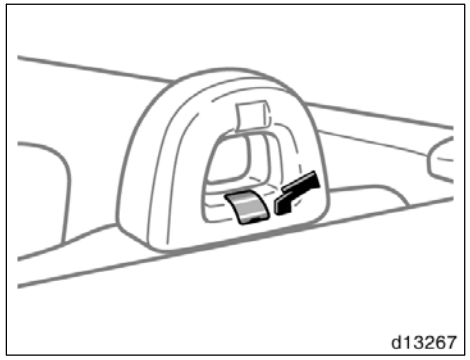

TO USE THE ANCHOR BRACKET:

1. **Remove the cover for the anchor bracket.**

2. **Securely fasten the child restraint system with the seat belt.**

   Latch the hook onto the anchor bracket and tighten the top strap.

For instructions to install the child restraint system, see “Child restraint” on page 85 in this Section.

⚠ CAUTION

Make sure the top strap is securely latched, and check that the child restraint system is secure by pushing and pulling it in different directions. Follow all the installation instructions provided by its manufacturer.

—Installation with child restraint lower anchorages (coupe)

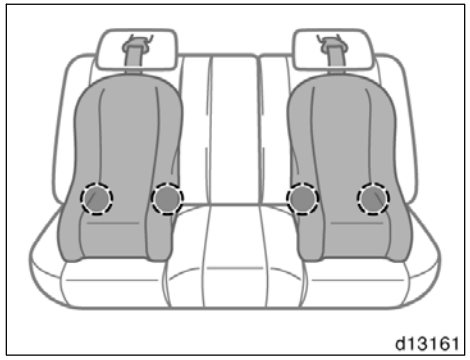

Lower anchorages for the child restraint systems complying with the FMVSS225 or CMVSS210.2 specifications are installed in the rear seat.

The anchorages are installed in the gap between the seat cushion and seatback of both outside rear seats.

Child restraint systems complying with the FMVSS213 or CMVSS213 specification can be fixed to these anchorages. In this case, it is not necessary to fix the child restraint system with a seat belt on the vehicle.

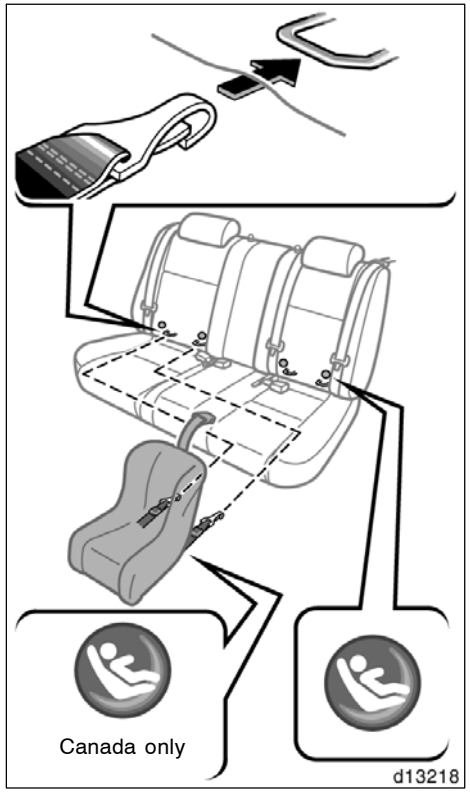

Type A

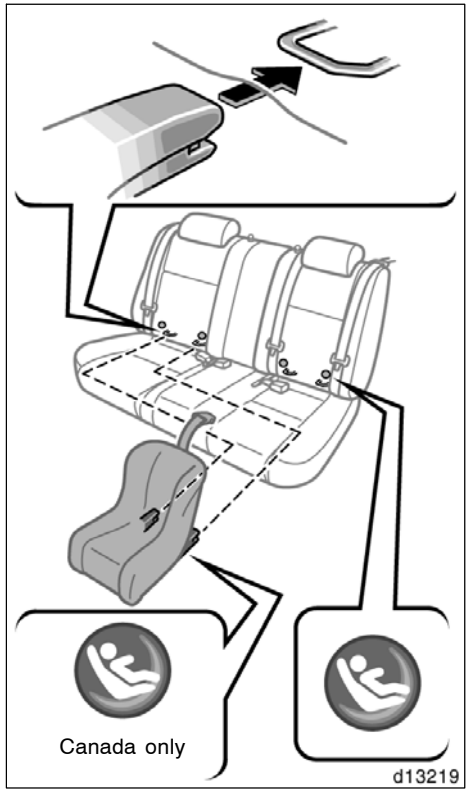

Type B

CHILD RESTRAINT SYSTEM INSTALLATION

1. **Widen the gap between the seat cushion and seatback slightly and confirm the position of the lower anchorages near the button on the seatback.**
2. **Type A—Latch the hooks of lower straps onto the anchorages and tighten the lower straps.**

   Type B—Latch the buckles onto the anchorages.

For owners in Canada—The symbol on a child restraint system indicates the presence of a lower connector system.

If your child restraint system has a top strap, it should be anchored. (For the installation of the top strap, see “—Using a top strap” on page 98 in this Section.)

For installation details, refer to the instruction manual equipped with each product.

⚠ CAUTION

- **When using the lower anchorages for the child restraint system, be sure that there are no irregular objects around the anchorages or that the seat belt is not caught.**
- **Push and pull the child restraint system in different directions to be sure it is secure. Follow all the installation instructions provided by its manufacturer.**
- **Do not install a child restraint system on the rear seat if it interferes with the lock mechanism of the front seats. Otherwise, the child or front seat occupant(s) may be killed or seriously injured in case of sudden braking or a collision.**

—Installation with child restraint lower anchorages (convertible)

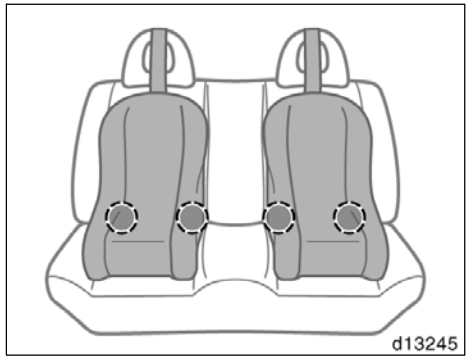

Lower anchorages for the child restraint systems complying with the FMVSS225 or CMVSS210.2 specifications are installed in the rear seat.

The anchorages are installed in the gap between the seat cushion and seatback of both rear seats.

Child restraint systems complying with the FMVSS213 or CMVSS213 specification can be fixed to these anchorages. In this case, it is not necessary to fix the child restraint system with a seat belt on the vehicle.

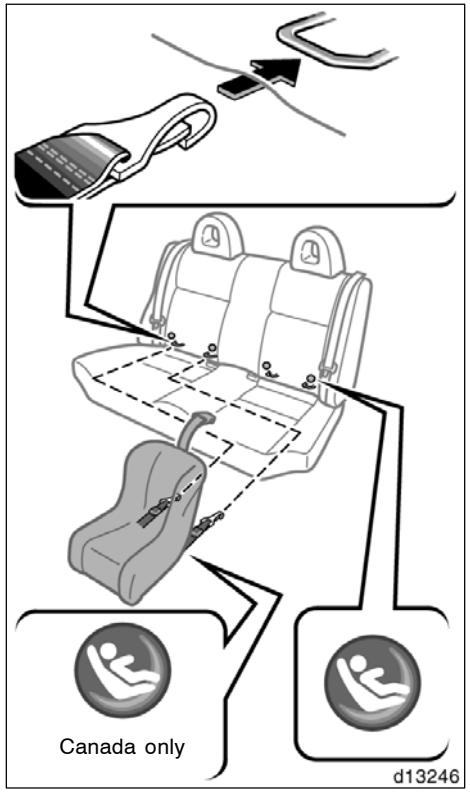

Type A

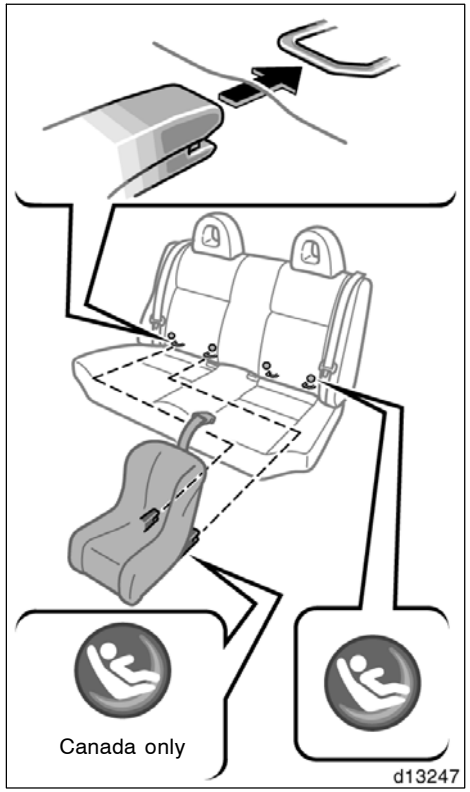

Type B

CHILD RESTRAINT SYSTEM INSTALLATION

1. **Widen the gap between the seat cushion and seatback slightly and confirm the position of the lower anchorages near the button on the seatback.**
2. **Type A—Latch the hooks of lower straps onto the anchorages and tighten the lower straps.**

   Type B—Latch the buckles onto the anchorages.

For owners in Canada—The symbol on a child restraint system indicates the presence of a lower connector system.

If your child restraint system has a top strap, it should be anchored. (For the installation of the top strap, see “—Using a top strap” on page 100 in this Section.)

For installation details, refer to the instruction manual equipped with each product.

⚠ CAUTION

- **When using the lower anchorages for the child restraint system, be sure that there are no irregular objects around the anchorages or that the seat belt is not caught.**
- **Push and pull the child restraint system in different directions to be sure it is secure. Follow all the installation instructions provided by its manufacturer.**
- **Do not install a child restraint system on the rear seat if it interferes with the lock mechanism of the front seats. Otherwise, the child or front seat occupant(s) may be killed or seriously injured in case of sudden braking or a collision.**

SECTION 1 – 4

OPERATION OF INSTRUMENTS AND CONTROLS

Steering wheel and Mirrors

Tilt and telescopic steering wheel 108
Outside rear view mirrors 109
Anti–glare inside rear view mirror 110
Auto anti–glare inside rear view mirror 111
Sun visors 112

Tilt and telescopic steering wheel

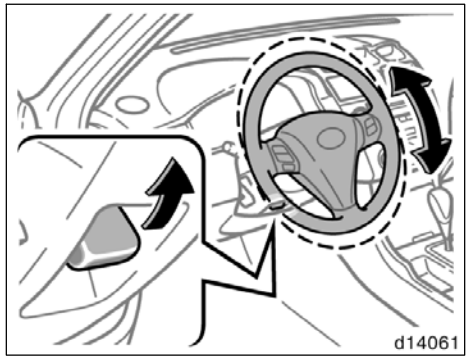

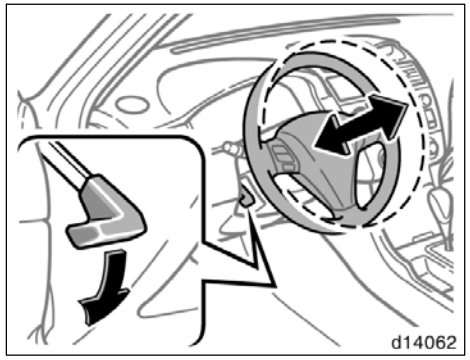

TILT STEERING WHEEL

To change the steering wheel angle, hold the steering wheel, pull the tilt lock release lever, tilt the steering wheel to the desired angle and release the lever.

When the steering wheel is in a low position, it will spring up as you release the lock release lever.

TELESCOPIC STEERING WHEEL

To change the steering wheel column length, hold the steering wheel, push down the telescopic lock release lever, push or pull the steering wheel to the desired length and return the lever to its original position.

⚠ CAUTION

- **Do not adjust the steering wheel while the vehicle is moving. Doing so may cause the driver to mishandle the vehicle and an accident may occur resulting in death or serious injuries.**
- **After adjusting the steering wheel, try moving it up and down or forward and rearward to make sure it is locked in position.**

Outside rear view mirrors—

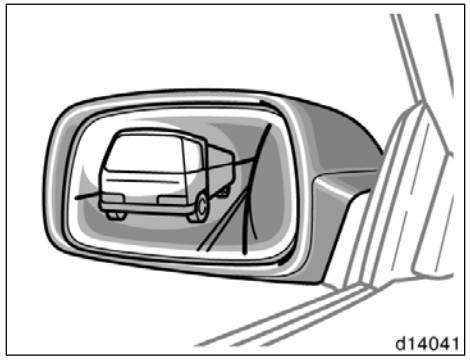

Adjust the mirror so that you can just see the side of your vehicle in the mirror.

Be careful when judging the size or distance of any object seen in the outside rear view mirror on the passenger’s side because it is a convex mirror. Any object seen in a convex mirror will look smaller and farther away than when seen in a flat mirror.

With auto anti–glare inside rear view mirror—

When the inside rear view mirror darkens in automatic function mode, the driver’s outside rear view mirror also darkens to reduce the reflection of the headlights of the following vehicle. For details, see “Auto anti–glare inside rear view mirror” on page 111 in this Section.

When you push the rear window defogger switch, the heater panels in the outside rear view mirrors will quickly clear the mirror surface. (See “Rear window and outside rear view mirror defoggers” on page 127 in Section 1–5.)

⚠ CAUTION

- **Do not adjust the mirror while the vehicle is moving. Doing so may cause the driver to mishandle the vehicle and an accident may occur resulting in death or serious injuries.**
- **With auto anti–glare inside rear view mirror: Since the outside rear view mirror surfaces can get hot, do not touch them when the defogger switch is on.**

NOTICE

The outside rear view mirrors are fixed in place. Do not try to fold the mirrors. It may damage the mirrors.

—Power rear view mirror control

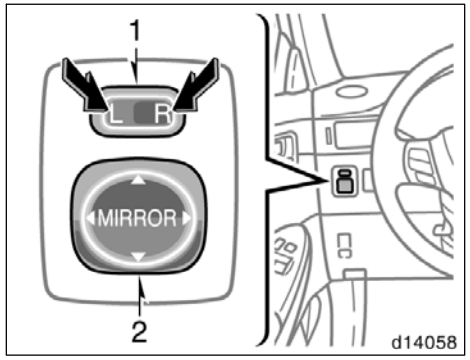

To adjust a mirror, use the switches.

1. Master switch—To select the mirror to be adjusted
   Push the switch to “L” (left) or “R” (right).
2. Control switch—To move the mirror
   Push the switch in the desired direction.

Mirrors can be adjusted when the engine switch is in the “ACC” or “ON” position.

NOTICE

If ice should jam the mirror, do not operate the control or scrape the mirror face. Use a spray de–icer to free the mirror.

Anti–glare inside rear view mirror

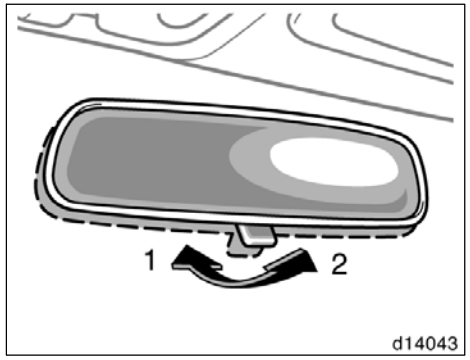

Adjust the mirror so that you can just see the rear of your vehicle in the mirror.

To reduce glare from the headlights of the vehicle behind you during night driving, operate the lever on the lower edge of the mirror.

Daylight driving—Lever at position 1

The reflection in the mirror has greater clarity at this position.

Night driving—Lever at position 2

Remember that by reducing glare you also lose some rear view clarity.

⚠ CAUTION

Do not adjust the mirror while the vehicle is moving. Doing so may cause the driver to mishandle the vehicle and an accident may occur resulting in death or serious injuries.

Auto anti–glare inside rear view mirror

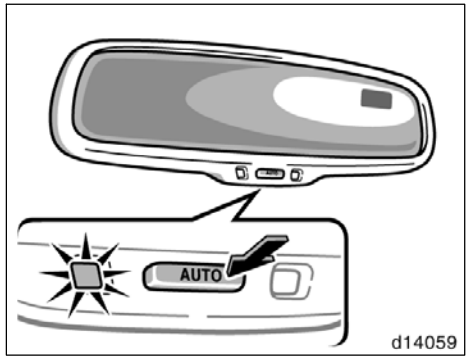

Adjust the mirror so that you can just see the rear of your vehicle in the mirror.

This mirror is equipped with auto anti–glare function. The function is designed to reduce glare from the headlights of the vehicle behind you during night driving.

When the engine switch is in “ON” position, the inside rear view mirror always turns on in the automatic function mode.

The indicator illuminates to show you that the function is on.

In automatic function mode, if the mirror detects light from the headlights of the vehicle behind you, the mirror surface darkens slightly to reduce the reflected light.

To turn off and on the automatic function, push the “AUTO” switch.

Adjust it before driving so that the rear view is in the best condition.

When the inside air temperature is low, it may take a little longer for the mirror to darken in response to the detection of headlights.

⚠ CAUTION

Do not adjust the mirror while the vehicle is moving. Doing so may cause the driver to mishandle the vehicle and an accident may occur resulting in death or serious injuries.

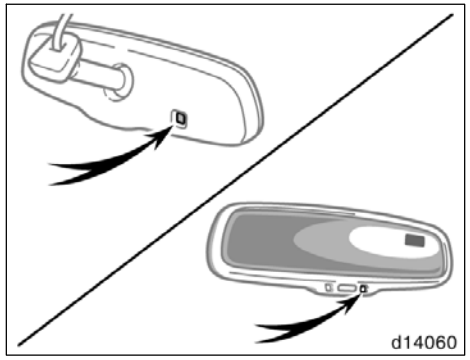

To ensure correct functioning of anti–glare mirror sensors located on both sides of the mirror, do not touch or cover the sensors with your finger or a piece of cloth, etc.

Sun visors—

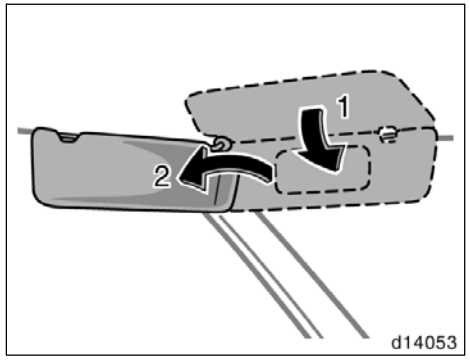

Coupe

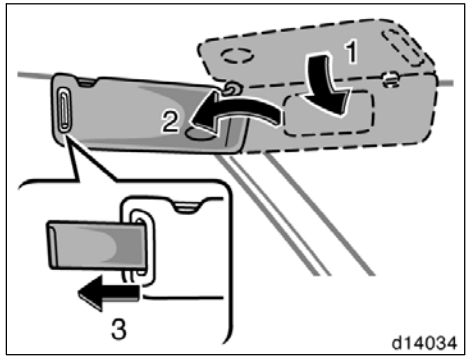

Convertible

To block out glare, move the sun visor.

To block out glare from the front—Swing down the sun visor (position 1).

To block out glare from the side—Swing down the sun visor, remove it from the hook and swing it to the lateral side (position 2).

Convertible—If glare comes from obliquely behind you, extend the plate at the end of the visor (to position 3).

⚠ CAUTION

Convertible—Do not extend the plate at the end of the sun visor when the visor is in the position 1. It can cover the anti–glare inside rear view mirror and obstruct the rear view.

—Vanity mirrors

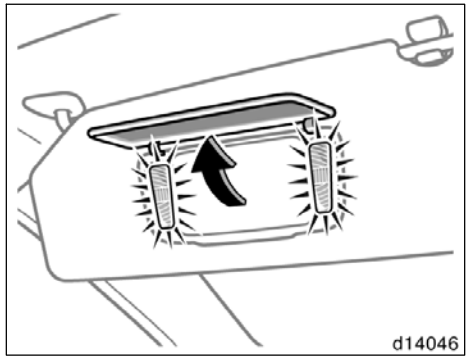

To use the vanity mirror, swing down the sun visor and open the cover.

The vanity lights come on when you open the cover.

SECTION 1 – 5

OPERATION OF INSTRUMENTS AND CONTROLS

Lights, Wipers and Defoggers

Headlights and turn signals 116
Headlight beam level control 121
Emergency flashers 122
Instrument panel light control 123
Front fog lights 123
Interior light 123
Engine (ignition) switch light and quarter trim courtesy light 124
Personal lights 125
Windshield wipers and washer 126
Rear window and outside rear view mirror defoggers 127

Headlights and turn signals (for the U.S.A.)

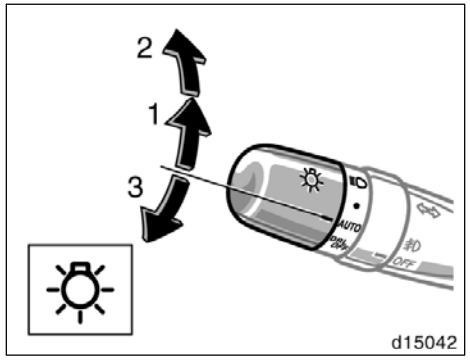

HEADLIGHTS

Manual operation—

To turn on the following lights: Twist the headlight/turn signal lever knob.

Position 1—Parking, tail, license plate, side marker and instrument panel lights

Position 2—Headlights and all of the above

The headlight indicator lights up in the instrument cluster.

When the tail lights/headlights are turned on, the brightness of the instrument cluster will be reduced slightly unless the instrument panel light control knob is turned fully clockwise.

However, the brightness of the instrument cluster will not be reduced in daytime even when the tail lights/headlights are turned on.

Automatic operation—

To turn on or off the lights automatically, twist the headlight/turn signal lever knob to the “AUTO” position when the engine switch is in the “ON” position.

The headlights and/or all of the lights in position 1 automatically turn on or off depending on the darkness of the surroundings.

Manually twist the knob to the position 2 to turn on the headlights if they are needed immediately when entering a dark tunnel, parking structure, etc.

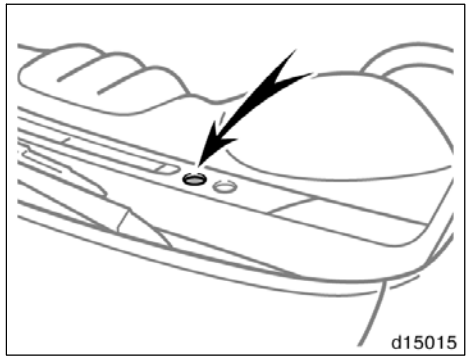

The automatic light control sensor is on the top of the driver’s side instrument panel.

Do not place anything on the instrument panel, and/or do not affix anything on the windshield to block this sensor.

If you feel that the automatic light control comes into operation too early or too late, have the sensor adjusted by your Toyota dealer.

Automatic light cut off system

Position 1—

The lights automatically turn off when the driver’s door is opened with the engine switch in the “ACC” or “LOCK” position.

Position 2 or “AUTO” position with the headlights on—

The lights automatically turn off after 30 seconds when any of the doors or trunk lid is opened and closed with the engine switch in the “ACC” or “LOCK” position.

If you want to turn off the lights immediately, push the lock button on the wireless remote control transmitter twice. The lights also can be turned off immediately by pushing the lock button on the wireless remote control transmitter with all the doors locked and the trunk lid closed.

If any of the doors or trunk lid is kept open, the lights automatically turn off after 20 minutes.

To turn on the lights again, turn the engine switch to the “ON” position or actuate the headlight switch. If you are going to park for over one week, make sure the knob is in the “DRL OFF” position.

NOTICE

To prevent the battery from becoming discharged, do not leave the lights on for a long period when the engine is not running.

Daytime running light (DRL) system

The Daytime Running Light (DRL) System can make it easier for others to see the front of your vehicle during the day. The DRL system can be helpful in many different driving conditions, but they can be especially helpful in the short periods after dawn and before sunset.

The DRL system will make your headlights come on at a reduced brightness when:

- The ignition is on with the engine running.
- The light switch is in the “AUTO” position with the headlights off or position 1.
- The parking brake is released.

To turn on the other exterior lights and instrument panel lights, twist the knob to position 1.

Twist the knob to position 2 to turn the headlights to full intensity for night driving.

To turn off the DRL system, twist the knob to position 3 (“DRL OFF”) or turn the engine switch off.

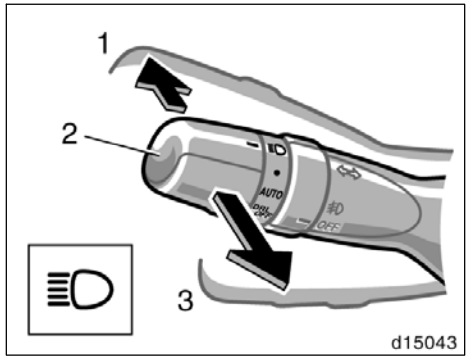

High–Low beams—For high beams, turn the headlights on and push the lever away from you (position 1). Pull the lever toward you (position 2) for low beams.

The headlight high beam indicator light (blue light) on the instrument panel will tell you that the high beams are on.

Flashing the high beam headlights (position 3)—Pull the lever all the way back. The high beam headlights turn off when you release the lever.

You can flash the high beam headlights even when the headlights are off.

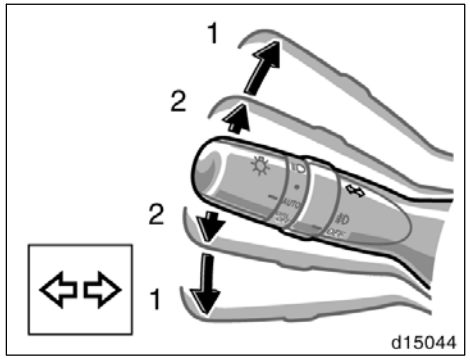

TURN SIGNALS

To signal a turn, push the headlight/turn signal lever up or down to position 1.

The engine switch must be in the “ON” position.

The lever automatically returns after you make a turn, but you may have to return it by hand after you change lanes.

To signal a lane change, move the lever up or down to the pressure point (position 2) and hold it.

If the turn signal indicator lights (green lights) on the instrument panel flash faster than normal, a front or rear turn signal bulb is burned out. See “Replacing light bulbs” on page 364 in Section 7–3.

Headlights and turn signals (for Canada)

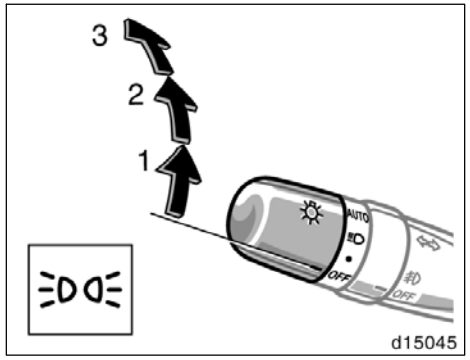

HEADLIGHTS

To turn on the following lights: Twist the headlight/turn signal lever knob.

Position 1—Parking, tail, license plate, side marker and instrument panel lights

The tail light indicator lights up in the instrument cluster.

Position 2—Headlights and all of the above

Position 3 (“AUTO”)—Headlights and/or all of the lights in the position 1

They automatically turn on or off depending on the darkness of the surroundings.

Manually twist the knob to the position 2 to turn on the headlights if they are needed immediately when entering a dark tunnel, parking structure, etc.

When the tail lights/headlights are turned on, the brightness of the instrument cluster will be reduced slightly unless the instrument panel light control knob is turned fully clockwise.

However, the brightness of the instrument cluster will not be reduced in daytime even when the tail lights/headlights are turned on.

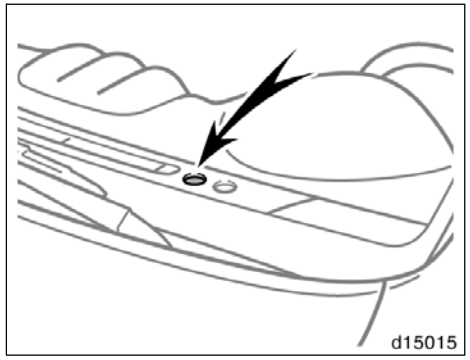

The automatic light control sensor is on the top of the driver’s side instrument panel.

Do not place anything on the instrument panel, and/or do not affix anything on the windshield to block this sensor.

If you feel that the automatic light control comes into operation too early or too late, have the sensor adjusted by your Toyota dealer.

Automatic light cut off system

Position 1 or position 3 with the tail lights on—

The lights automatically turn off when the driver’s door is opened with the engine switch in the “ACC” or “LOCK” position.

Position 2 or position 3 with the headlights on—

The lights automatically turn off after 30 seconds when any of the doors or trunk lid is opened and closed with the engine switch in the “ACC” or “LOCK” position.

If you want to turn off the lights immediately, push the lock button on the wireless remote control transmitter twice. The lights also can be turned off immediately by pushing the lock button on the wireless remote control transmitter with all the doors locked and the trunk lid closed.

If any of the doors or trunk lid is kept open, the lights automatically turn off after 20 minutes.

To turn on the lights again, turn the engine switch to the “ON” position or actuate the headlight switch. If you are going to park for over one week, make sure the headlight switch is off.

NOTICE
To prevent the battery from becoming discharged, do not leave the lights on for a long period when the engine is not running.

Daytime running light (DRL) system

The Daytime Running Light (DRL) system can make it easier for others to see the front of your vehicle during the day. The DRL system can be helpful in many different driving conditions, but they can be especially helpful in the short periods after dawn and before sunset.

The DRL system will make your headlights come on at a reduced brightness when:

- The ignition is on with the engine running.
- The headlight switch is off.
- The parking brake is released.

To turn on the other exterior lights and instrument panel lights, twist the knob to the position 1.

Twist the knob to the position 2 to turn the headlights to full intensity for night driving.

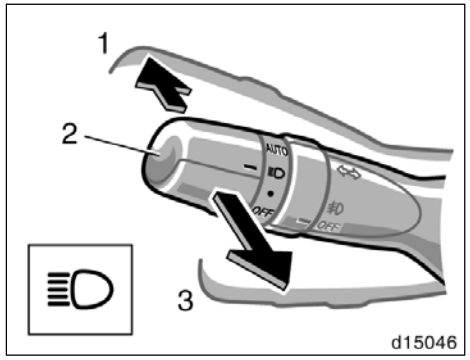

High–Low beams—For high beams, turn the headlights on and push the lever away from you (position 1). Pull the lever toward you (position 2) for low beams.

The headlight high beam indicator light (blue light) on the instrument panel will tell you that the high beams are on.

Flashing the high beam headlights (position 3)—Pull the lever all the way back. The high beam headlights turn off when you release the lever.

You can flash the high beam headlights with the knob turned to “OFF”.

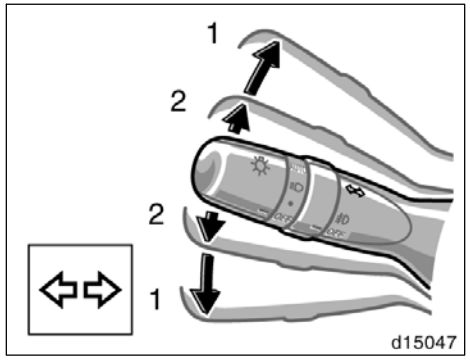

TURN SIGNALS

To signal a turn, push the headlight/ turn signal lever up or down to position 1.

The engine switch must be in the “ON” position.

The lever automatically returns after you make a turn, but you may have to return it by hand after you change lanes.

To signal a lane change, move the lever up or down to the pressure point (position 2) and hold it.

If the turn signal indicator lights (green lights) on the instrument panel flash faster than normal, a front or rear turn signal bulb is burned out. See “Replacing light bulbs” on page 364 in Section 7–3.

Headlight beam level control

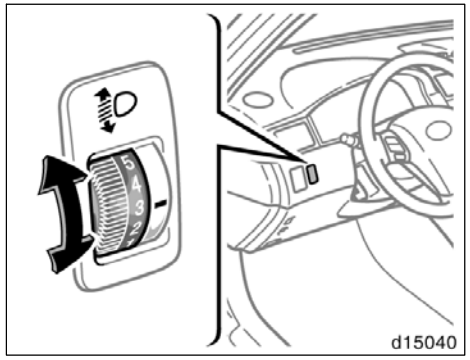

Coupe

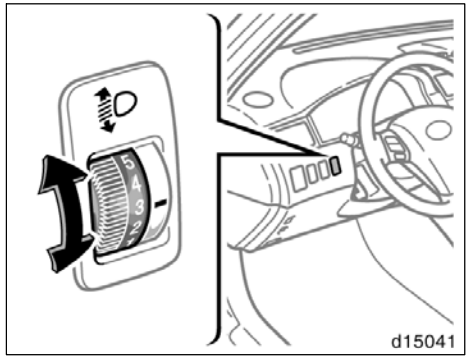

Convertible

To adjust the headlight beam level, turn the dial.

The following list shows examples of proper dial settings. For loading conditions other than those listed, adjust the dial position so that the beam level is the same as the one obtained according to the list when only the driver is in the vehicle. The higher the number of the dial position, the lower the headlight beam level.

Always keep the headlight beam at the proper level, or your headlights may dazzle other road users.

Loading condition	Dial position
Driver only	0
Driver + front passenger	0
Full passengers (including driver)	2
Full passengers (including driver) + full luggage loading to the luggage room	2
Driver + full luggage loading	1

Emergency flashers

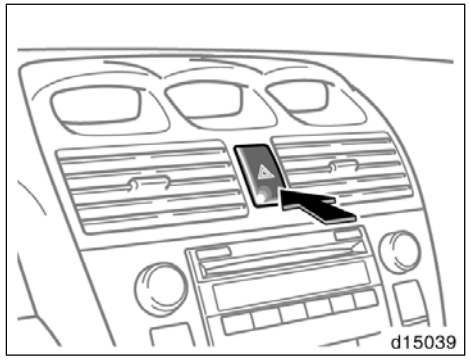

To turn on the emergency flashers, push the switch.

All the turn signal lights will flash. To turn them off, push the switch once again.

Turn on the emergency flashers to warn other drivers if your vehicle must be stopped where it might be a traffic hazard.

Always pull as far off the road as possible.

The turn signal light switch will not work when the emergency flashers are operating.

NOTICE

To prevent the battery from becoming discharged, do not leave the switch on longer than necessary when the engine is not running.

Instrument panel light control

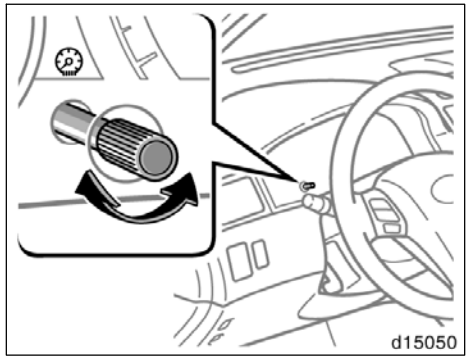

To adjust the brightness of the instrument panel lights, turn the knob.

With the knob turned fully clockwise, the intensity of the instrument panel lights will not be reduced even when the tail lights/headlights are turned on.

Front fog lights

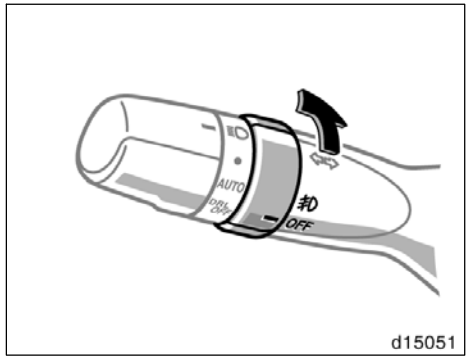

To turn on the front fog lights, twist the band of the headlight and turn signal switch lever. They will come on only when the headlights are on low beam.

Interior light

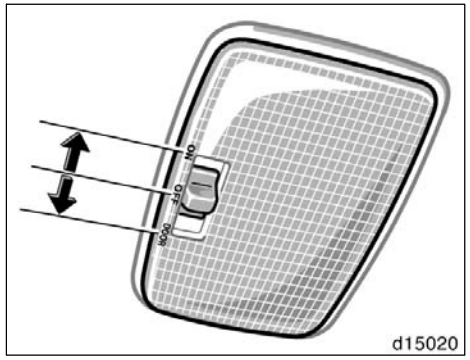

To turn on the interior light, slide the switch.

The interior light switch has the following positions:

“ON”—Keeps the light on all the time.

“OFF”—Turns the light off.

“DOOR”—Turns the light on while any door is opened.

ILLUMINATED ENTRY SYSTEM

When the switch is in the “DOOR” position, the interior light comes on and remains on for about 15 seconds before fading out in the following cases:

- Open and close any of the doors.
- Turn the engine switch to the “LOCK” position.
- Unlock a door when both doors are locked.

However, in the following cases, the light goes off immediately.

- Both doors are closed when the engine switch is in the “ACC” or “ON” position.
- Both doors are closed and locked.

To prevent the battery from becoming discharged, the lights will automatically turn off when the key is removed and the door is left opened with the switch at “DOOR” position for 20 minutes or more.

Engine (ignition) switch light and quarter trim courtesy light

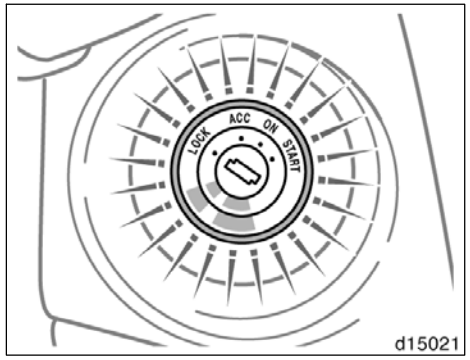

Engine switch light

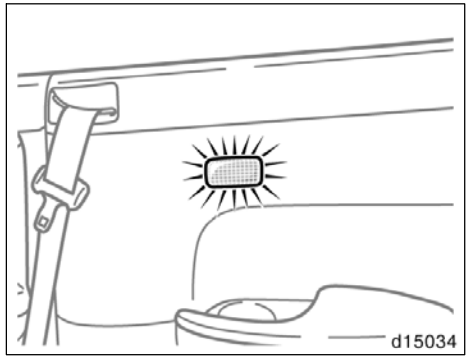

Quarter trim courtesy light (convertible)

For easy access to the engine switch, the engine switch light comes on when any of the doors are opened or when the engine switch is turned to the “LOCK” position.

Convertible—The quarter trim courtesy light also comes on under the same situation.

The lights remain on for about 15 seconds after both doors are closed.

When unlocking a door while both doors are locked, the lights come on and remain on for about 15 seconds before fading out.

However, in the following cases, the light goes off immediately.

- Both doors are closed when the engine switch is in the “ACC” or “ON” position.
- Both doors are closed and locked.

To prevent the battery from becoming discharged, the light will automatically turn off when the key is removed and the door is left opened for 20 minutes or more.

Personal lights

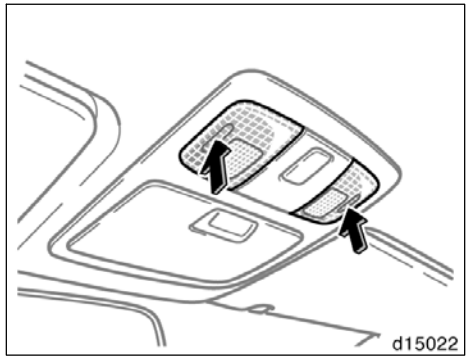

Coupe

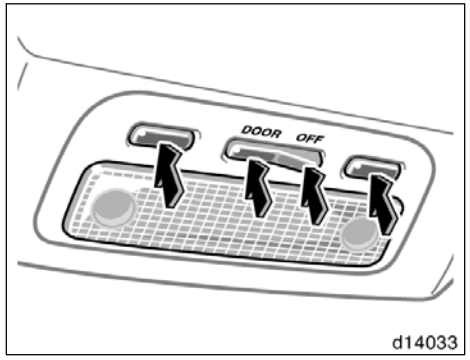

Convertible

Coupe—

To turn on the front personal light, push the lens. To turn the light off, push the lens once again.

Convertible—

To turn on the front personal light, push the outer switch. To turn the light off, push the switch once again.

The personal lights switch have the following positions:

“DOOR”—Turn the lights on while any door is opened without pushing the outer switch. The lights go off when all the doors are closed.

“OFF”—Turn the lights on only when you push the outer switch.

ILLUMINATED ENTRY SYSTEM (convertible)

When the switch is in the “DOOR” position, the front personal lights come on and remain on for about 15 seconds before fading out in the following cases:

- Open and close any of the doors.
- Turn the engine switch to the “LOCK” position.
- Unlock a door when both doors are locked.

However, in the following cases, the lights go off immediately.

- Both doors are closed when the engine switch is in the “ACC” or “ON” position.
- Both doors are closed and locked.

To prevent the battery from becoming discharged, the lights will automatically turn off when the key is removed and the door is left opened with the switch at “DOOR” position for 20 minutes or more.

Windshield wipers and washer

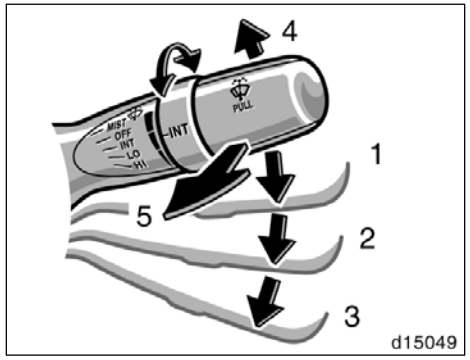

To turn on the windshield wipers, move the lever to the desired setting.

The engine switch must be in the “ON” position.

Lever position	Operation
Position 1	Intermittent operation
Position 2	Low speed operation
Position 3	High speed operation
Position 4	Single sweep operation
Position 5	Washer on

The “INT” band lets you adjust the wiping time interval when the wiper lever is in the intermittent position (position 1). Twist the band upward to increase the time between sweeps, and downward to decrease it.

To squirt washer fluid, pull the lever toward you.

If the windshield wipers are off, they will operate a couple of times after the washer squirts.

For instructions on adding washer fluid, see “Adding washer fluid” on page 363 in Section 7–3.

In freezing weather, warm the windshield with the defroster before using the washer. This will help prevent the washer fluid from freezing on your windshield, which can block your vision.

NOTICE

Do not operate the wipers if the windshield is dry. It may scratch the glass.

When waxing your vehicle, make sure that the washer nozzles do not become blocked. If a nozzle becomes blocked, contact your Toyota dealer to have the vehicle serviced.

NOTICE

If a nozzle becomes blocked, do not try to clear it with a pin or other object. The nozzle will be damaged.

Rear window and outside rear view mirror defoggers

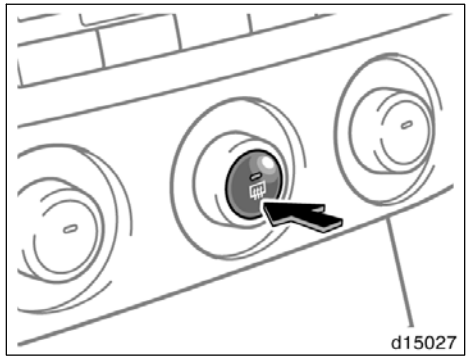

With manual air conditioning controls

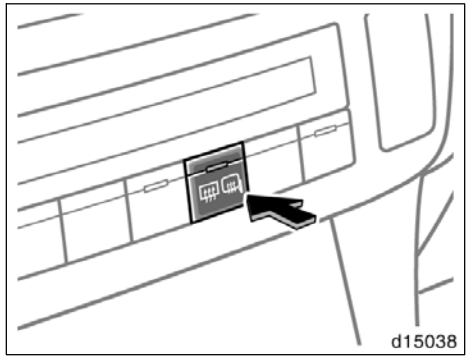

With automatic air conditioning controls

To defog or defrost the rear window, push the switch.

The engine switch must be in the “ON” position.

The thin heater wires on the inside of the rear window will quickly clear the surfaces. An indicator light will illuminate to indicate the defogger is operating.

With auto anti–glare inside rear view mirror: Heater panels in the outside rear view mirrors will also quickly clear the surfaces.

Push the switch once again to turn the defogger off.

The system will automatically shut off after the defogger has operated about 15 minutes.

⚠ CAUTION

With auto anti–glare inside rear view mirror: Since the outside rear view mirror surfaces can get hot, do not touch them when the defogger switch is on.

Make sure you turn the defoggers off when the surfaces are clear. Leaving the defoggers on for a long time could cause the battery to discharge, especially during stop–and–go driving. The defoggers are not designed for drying rain water or for melting snow.

If the outside rear view mirrors are heavily coated with ice, use a spray de–icer before operating the switch.

NOTICE

- ***When cleaning the inside of the rear window, be careful not to scratch or damage the heater wires or connectors.***
- ***Convertible—When the convertible top is lowered, keep the rear window defogger turned off to avoid damage to the convertible top.***

SECTION 1 – 6

OPERATION OF INSTRUMENTS AND CONTROLS

Gauges, Meters and Service reminder indicators

Fuel gauge 130
Engine coolant temperature gauge 130
Tachometer 131
Odometer and two trip meters 131
Service reminder indicators and warning buzzers 133

Fuel gauge

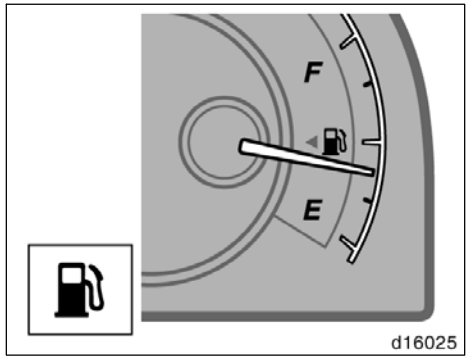

The gauge indicates the approximate quantity of fuel remaining in the tank when the engine switch is on.

Nearly full—Needle at “F”
Nearly empty—Needle at “E”

It is a good idea to keep the tank over 1/4 full.

If the fuel level approaches “E” or the low fuel level warning light comes on, fill the fuel tank as soon as possible.

On inclines or curves, due to the movement of fuel in the tank, the fuel gauge needle may fluctuate or the low fuel level warning light may come on earlier than usual.

If the fuel tank is completely empty, the malfunction indicator lamp comes on. Fill the fuel tank immediately.

The indicator lamp goes off after driving several times. If the indicator lamp does not go off, contact your Toyota dealer as soon as possible.

Engine coolant temperature gauge

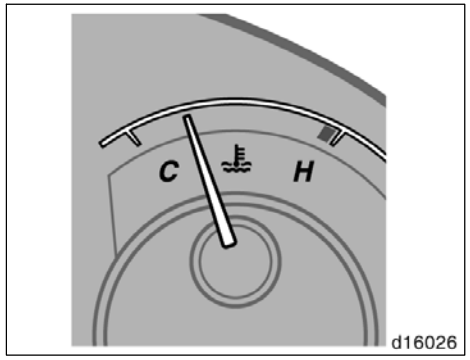

The gauge indicates the engine coolant temperature when the engine switch is on. The engine operating temperature will vary with changes in weather and engine load.

If the needle moves into the red zone, your engine is too hot. If your vehicle overheats, stop your vehicle and allow the engine to cool.

Your vehicle may overheat during severe operating conditions, such as:

- Driving up a long hill on a hot day.
- Reducing speed or stopping after high speed driving.
- Idling for a long period with the air conditioning on in stop–and–go traffic.

NOTICE

- ***Do not remove the thermostat in the engine cooling system as this may cause the engine to overheat. The thermostat is designed to control the flow of coolant to keep the temperature of the engine within the specified operating range.***
- ***Do not continue driving with an overheated engine. See “If your vehicle overheats” on page 304 in Section 4.***

Tachometer

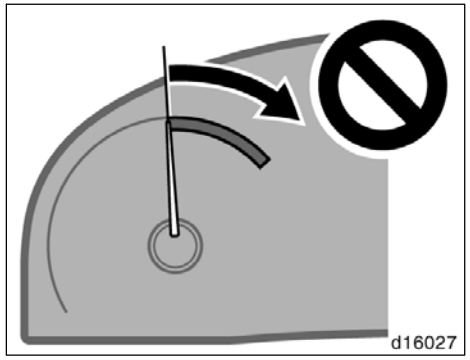

The tachometer indicates engine speed in thousands of rpm (revolutions per minute). Use it while driving to select correct shift points and to prevent engine lugging and over–revving.

Driving with the engine running too fast causes excessive engine wear and poor fuel economy. Remember, in most cases the slower the engine speed, the greater the fuel economy.

NOTICE

Do not let the indicator needle get into the red zone. This may cause severe engine damage.

Odometer and two trip meters

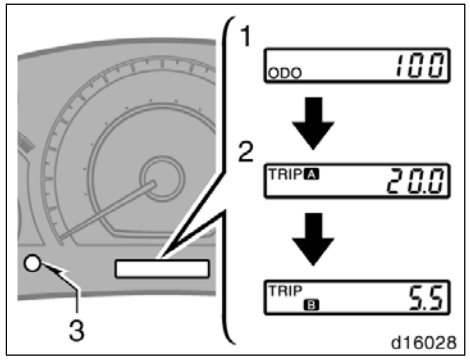

This meter displays the odometer and two trip meters when the engine switch is on.

1. Odometer—Shows the total distance the vehicle has been driven.
2. Two trip meters—Show two different distances independently driven since the last time each trip meter was set to zero.

   You can use one trip meter to calculate the fuel economy and the other to measure the distance on each trip. All trip meter data is cancelled if the electrical power source is disconnected.

3. Trip meter reset knob—Resets the two trip meters to zero, and also change the meter display.

   To change the meter display, quickly push and release the knob. The meter display changes in the order from the odometer to trip meter A to trip meter B, then back to the odometer each time you push.

   To reset the trip meter A to zero, display the meter A reading, then push and hold the knob until the meter is set to zero. The same process can be applied for resetting the trip meter B.

Service reminder indicators and warning buzzers

If the indicator or buzzer comes on...		Do this.
(a)	**BRAKE** or	If parking brake is off, stop immediately and contact Toyota dealer.
(b)	(indicator and buzzer)	Fasten driver’s seat belt.
(c)	PASSENGER (indicator and buzzer)	Fasten front passenger’s seat belt.
(d)		Stop immediately and contact Toyota dealer.
(e)	CHECK	Take vehicle to Toyota dealer.
(f)		Stop and check.
(g)		Fill up tank.

If the indicator or buzzer comes on...		Do this.
(h)	**ABS** or	Take vehicle to Toyota dealer. If brake system warning light is also on, stop immediately and contact Toyota dealer.
(i)		Close all doors.
(j)		Take vehicle to Toyota dealer immediately.
(k)		Adjust tire inflation pressure (including ground spare tire). If warning light comes on after blinking for 1 minute, contact Toyota dealer.
(l)		Add washer fluid.
(m)	**VSC**	Take vehicle to Toyota dealer.
(n)	**MAINT**	Replace engine oil.
(o)	Key reminder buzzer	Remove key.

(a) Brake System Warning Light

This light comes on in the following cases when the engine switch is in the “ON” position.

- **When the parking brake is applied...**

This light comes on for a few seconds when the engine switch is turned to the “ON” position even after the parking brake is released.

- **When the brake fluid level is low...**

CAUTION

It is dangerous to continue driving normally when the brake fluid level is low.

Have your vehicle checked at your Toyota dealer in the following cases:

- The light does not come on even if the parking brake is applied when the engine switch is in the “ON” position.
- The light does not come on even if the engine switch is turned on with the parking brake released.

A warning light turning on briefly during operation does not indicate a problem.

CAUTION

If either of the following conditions occurs, immediately stop your vehicle at a safe place and contact your Toyota dealer.

- **The light does not turn off even after the parking brake is released while the engine is running.**

  In this case, the brakes may not work properly and your stopping distance will become longer. Depress the brake pedal firmly and bring the vehicle to an immediate stop.
- **The brake system warning light remains on together with the “ABS” warning light.**

  In this case, not only the anti–lock brake system will fail but also the vehicle will become extremely unstable during braking.

(b) Driver’s Seat Belt Reminder Light and Buzzer

The light and buzzer act as a reminder to buckle up the driver’s seat belt.

Once the engine switch is turned to “ON”, the reminder light flashes and buzzer sounds if the driver’s seat belt is not fastened. Unless the driver fastens the belt, the light continues flashing and the buzzer stops after about 6 seconds.

If the vehicle speed rises above 20 km/h (12 mph) with the seat belt unfastened, the buzzer will sound for about 10 seconds. Then, if the seat belt is still unfastened, the buzzer will sound in a different tone for 20 seconds. Even if the vehicle speed drops below 20 km/h (12 mph), the buzzer will continue to sound. To stop the buzzer, fasten the seat belt. If the buzzer still sounds, make sure the front passenger’s seat belt is fastened.

(c) Front Passenger’s Seat Belt Reminder Light and Buzzer

The light and buzzer act as a reminder to have the front passenger buckle up the seat belt.

Once the engine switch is turned to “ON”, the reminder light flashes if a passenger sits in the front passenger seat and does not fasten the seat belt. However, if a front passenger uses an additional seat cushion, the light may not flash even when the seat belt is not buckled up.

If the vehicle speed rises above 20 km/h (12 mph) with the seat belt unfastened, the buzzer will sound for 10 seconds. Then, if the seat belt is still unfastened, the buzzer will sound in a different tone for 20 seconds. Even if the vehicle speed drops below 20 km/h (12 mph), the buzzer will continue to sound. To stop the buzzer, fasten the seat belt. If the buzzer still sounds, make sure the driver’s seat belt is fastened.

If luggage or other load is placed on the front passenger seat, depending on its weight, the reminder light to flash and buzzer to sounds.

(d) Charging System Warning Light

This warning light comes on when the engine switch is turned to the “ON” position, and goes off when the engine is started.

When there are problems in the charging system while the engine is running, the warning light comes on.

NOTICE

When the charging system warning light comes on while the engine is running, malfunctions such as the engine drive belt being broken may have occurred. If the warning light comes on, immediately stop the vehicle in a safe place and contact your Toyota dealer.

(e) Malfunction Indicator Lamp

This lamp comes on when the engine switch is turned to the “ON” position and goes off after the engine starts. This means that the warning light system is operating properly.

If the lamp remains on, or the lamp comes on while driving, first check the following.

- Empty fuel tank

  If the fuel tank is empty, refuel immediately.

- Loose fuel tank cap

  If the fuel tank cap is loose, securely tighten it.

These cases are temporary malfunctions. The malfunction indicator lamp will go off after taking several driving trips.

If the lamp does not go off even after several trips, contact your Toyota dealer as soon as possible.

If the fuel tank is not empty or the fuel tank cap is not loose...

- There is a problem somewhere in the engine, emission control system, electronic throttle control system, automatic transmission electrical system or warning light system itself.

Contact your Toyota dealer as soon as possible to service the vehicle.

If engine speed does not increase when the accelerator pedal is depressed, there may be a problem somewhere in the electronic throttle control system.

At this time, vibration may occur. However, if you depress the accelerator pedal more firmly and slowly, you can drive your vehicle at low speeds. Have your vehicle checked by your Toyota dealer as soon as possible.

Even if the abnormality of the electronic throttle control system is corrected during low speed driving, the system may not be recovered until the engine is stopped and the engine switch is turned to “ACC” or “LOCK” position.

CAUTION

Be especially careful to prevent erroneous pedal operation.

Emissions inspection and maintenance (I/M) programs

Your vehicle may not pass a state emission inspection if the malfunction indicator lamp remains on. Contact your Toyota dealer to check your vehicle’s emission control system and OBD (On–Board Diagnostics) system before taking your vehicle for the inspection.

For details, see “Emissions Inspection and Maintenance (I/M) programs” on page 334 in Section 6.

(f) Low Engine Oil Pressure Warning Light

This light warns that the engine oil pressure is too low.

If it flickers or stays on while you are driving, pull off the road to a safe place and stop the engine immediately. Call a Toyota dealer or qualified repair shop for assistance.

The light may occasionally flicker when the engine is idling or it may come on briefly after a hard stop. There is no cause for concern if it then goes out when the engine is accelerated slightly.

The light may come on when the oil level is extremely low. It is not designed to indicate low oil level, and the oil level must be checked using the level dipstick.

NOTICE

Do not drive the vehicle with the warning light on—even for one block. It may ruin the engine.

(g) Low Fuel Level Warning Light

This light comes on when the fuel level in the tank becomes nearly empty. Fill up the tank as soon as possible.

On inclines or curves, due to the movement of fuel in the tank, the low fuel level warning light may come on earlier than usual.

(h) “ABS” Warning Light

Vehicles without vehicle stability control system—

The light comes on with the engine switch turned to the “ON” position. If the anti–lock brake system works properly, the light turns off after a few seconds. Thereafter, if the system malfunctions, the light comes on again.

When the “ABS” warning light is on (and the brake system warning light is off), the anti–lock brake system does not operate, but the brake system still operates conventionally.

When the “ABS” warning light is on (and the brake system warning light is off), the anti–lock brake system does not operate so that the wheels could lock up during a sudden braking or braking on slippery road surfaces.

If either of the following conditions occurs, this indicates a malfunction somewhere in the components monitored by the warning light system. Contact your Toyota dealer as soon as possible to service the vehicle.

- The light does not come on when the engine switch is turned to the “ON” position, or remains on.
- The light comes on while you are driving.

A warning light turning on briefly during operation does not indicate a problem.

⚠ CAUTION

If the “ABS” warning light remains on together with the brake system warning light, immediately stop your vehicle at a safe place and contact your Toyota dealer.

In this case, not only the anti–lock brake system will fail but also the vehicle will become extremely unstable during braking.

Vehicles with vehicle stability control system—

The light comes on when the engine switch is turned to the “ON” position. If the anti–lock brake system and the brake assist system work properly, the light turns off after a few seconds. Thereafter, if either of the systems malfunctions, the light comes on again.

When the “ABS” warning light is on (and the brake system warning light is off), the anti–lock brake system and the brake assist system do not operate, but the brake system still operates conventionally.

When the “ABS” warning light is on (and the brake system warning light is off), the anti–lock brake system does not operate so that the wheels could lock up during a sudden brake or braking on slippery road surfaces.

If either of the following conditions occurs, this indicates a malfunction somewhere in the components monitored by the warning light system. Contact your Toyota dealer as soon as possible to service the vehicle.

- The light does not come on when the engine switch is turned to the “ON” position, or remains on.
- The light comes on while you are driving.

A warning light turning on briefly during operation does not indicate a problem.

⚠ CAUTION

If the “ABS” warning light remains on together with the brake system warning light, immediately stop your vehicle at a safe place and contact your Toyota dealer.

In this case, not only the anti–lock brake system will fail but also the vehicle will become extremely unstable during braking.

(i) Open Door Warning Light

This light remains on until all the doors are completely closed.

(j) SRS Warning Light

This indicator comes on when the engine switch is turned to the “ON” position. It goes off after about 6 seconds. This means the SRS airbags and seat belt pretensioners are operating properly.

This warning light system monitors the airbag sensor assembly, front airbag sensors, side airbag sensors, side and curtain shield airbag sensors, curtain shield airbag sensors, driver’s seat position sensor, driver’s seat belt buckle switch, front passenger occupant classification system and indicator light, front passenger’s seat belt buckle switch, seat belt pretensioner assemblies, inflators, warning light interconnecting wiring and power sources.

If any of the following conditions occurs, this indicates a malfunction of the airbags or seat belt pretensioners. Contact your Toyota dealer as soon as possible.

- When the engine switch is turned to the “ON” position, the light does not come on or remains on for more than 6 seconds.
- The light comes on or starts flashing while driving.

The SRS warning light will come on and front passenger occupant classification indicator light will indicate “OFF” if there is a malfunction in the front passenger occupant classification system.

(k) Tire Pressure Warning Light

This light warns that the tire inflation pressure of one or more of your tires (including ground spare tire) is low. The light comes on when the engine switch is turned to the “ON” position. It goes off after a few seconds. This indicates that the tire pressure warning system is functioning properly.

If the warning light comes on, stop your vehicle in a safe place as soon as possible and check that the inflation pressure of all tires (including ground spare tire) is as specified on the tire and loading information label. (See “Checking tire inflation pressure” on page 349 in Section 7–2.) The light should go off a few minutes after the tire pressure is adjusted.

If the warning light comes on after blinking for 1 minute, the tire pressure warning system may be malfunctioning. Contact your Toyota dealer.

For details, see “Tire pressure warning system” on page 155 in Section 1–7.

(l) Low Windshield Washer Fluid Level Warning Light

The light warns that the windshield washer fluid level is too low. Add washer fluid at your earliest opportunity. (For instructions, see “Adding washer fluid” on page 363 in Section 7–3.)

(m) “VSC” Warning Light

The light warns that there is a problem somewhere in the vehicle stability control system or traction control system.

The light will come on when the engine switch is turned to “ON”, and will go off after about a few seconds.

If the light comes on while driving, the system does not work. However, as conventional braking operates when applied, there is no problem to continue your driving.

In the following cases, contact your Toyota dealer:

- The warning light does not come on after the engine switch is turned to “ON”.
- The warning light remains on after the engine switch is turned to “ON”.
- The warning light comes on while driving.

The “TRAC OFF” indicator light will come on when the “VSC” warning light comes on even if the “TRAC OFF” switch is not pushed.

(n) Engine Oil Replacement Reminder Light (for vehicles sold in U.S.A.)

This light acts as a reminder to replace the engine oil.

This light will come on when the engine switch is turned to “ON” and will go off after about a few seconds.

When you drive for about 7200 km (4500 miles) after the engine oil replacement, this light illuminates for about 3 seconds and then flashes for about 15 seconds with the engine switch turned to the “ON” position. If you continue driving without replacing the engine oil, and if the distance driven exceeds 8000 km (5000 miles), the light will come on after the engine switch is turned to “ON” position. The light will remain on thereafter.

If the light is flashing, we recommend that you replace the engine oil at an early opportunity depending on the driving and road conditions. If the light comes on, replace it as soon as possible.

The system must be reset after the engine oil replacement. Reset the system by the following procedure:

1. Turn the engine switch to the “ACC” or “LOCK” position with the trip meter A reading shown. (For details, see “Odometer and two trip meters” on page 131 in this Section.)
2. Turn the engine switch to the “ON” position while holding down the trip meter reset knob.

Hold down the knob for at least 5 seconds. The odometer indicates “000000” and the light goes off.

If the system fails to reset, the light will continue flashing.

(o) Key Reminder Buzzer

This buzzer acts as a reminder to remove the key when you open the driver’s door with the engine switch in the “ACC” or “LOCK” position.

CHECKING SERVICE REMINDER INDICATORS (except the low fuel level warning light and low windshield washer fluid level warning light)

1. Apply the parking brake.
2. Open one of the doors.
   The open door warning light should come on.
3. Close the door.
   The open door warning light should go off.
4. Turn the engine switch to “ON”, but do not start the engine.
   All the service reminder indicators except the open door warning light should come on. The “ABS”, “VSC” and tire pressure warning lights, engine oil replacement reminder light, “TRAC OFF” and slip indicator lights go off after a few seconds. The SRS warning light goes off after about 6 seconds.

If any service reminder indicator or warning buzzer does not function as described above, have it checked by your Toyota dealer as soon as possible.

SECTION 1 – 7

OPERATION OF INSTRUMENTS AND CONTROLS

Engine (ignition) switch, Transmission and Parking brake

Engine (ignition) switch 144
Automatic transmission 146
Manual transmission 150
Traction control system 151
Vehicle stability control system 154
Tire pressure warning system 155
Parking brake 162
Cruise control 163

Engine (ignition) switch

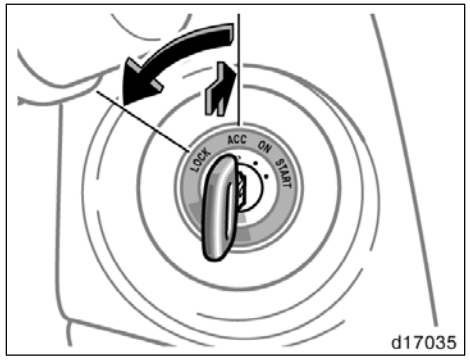

With manual transmission

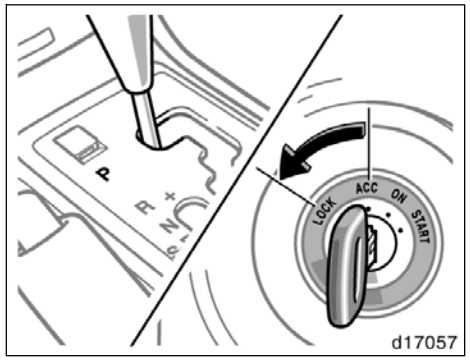

With automatic transmission

“START”—Starter motor on. The engine switch will return to the “ON” position when released.

For starting tips, see page 289 in Section 3.

“ON”—Engine on and all accessories on.

This is the normal driving position.

“ACC”—Accessories such as the radio operate, but the engine is off.

If you leave the engine switch in the “ACC” or “LOCK” position and open the driver’s door, a buzzer will remind you to remove the key.

“LOCK”—Engine is off and the steering wheel is locked. The engine switch can be removed only at this position.

With manual transmission—You must push in the key to turn the engine switch from “ACC” to the “LOCK” position.

With automatic transmission—The selector lever must be put in the “P” position before turning the engine switch from “ACC” to the “LOCK” position.

Once you remove the key, the engine immobilizer system is automatically set. (See “Engine immobilizer system” on page 14 in Section 1–2.)

When starting the engine, the engine switch may seem stuck at the “LOCK” position. To free it, first be sure the key is pushed all the way in, and then rock the steering wheel slightly while turning the key gently.

Approximately five hours after the engine is turned off, you may hear sound coming from under the floor around the driver’s seat for several minutes. This is normal operation and does not indicate a malfunction. (See “Leak detection pump” on page viii.)

It is not a malfunction if the needles on all meters and gauges move slightly when the engine switch is turned to the “ACC”, “ON” or “START” position.

⚠ CAUTION

For manual transmission:

Never remove the key when the vehicle is moving, as this will lock the steering wheel and result in loss of steering control.

NOTICE
Do not leave the engine switch in the “ON” position if the engine is not running. The battery will discharge and the ignition could be damaged.

Automatic transmission

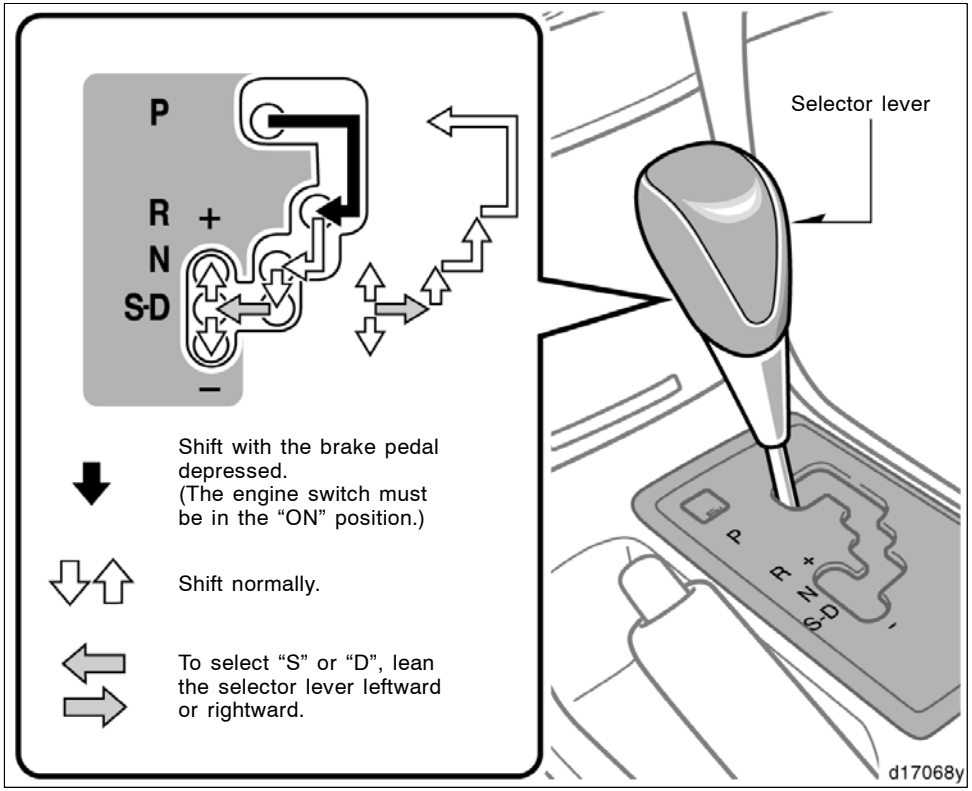

Your automatic transmission has a shift lock system to minimize the possibility of incorrect operation. This means you can only shift out of “P” position when the brake pedal is depressed (with the engine switch in the “ON” position).

(a) Selector lever

The shift position is also displayed on the instrument cluster.

P: Parking, engine starting and key removal

R: Reverse

N: Neutral

D: Normal driving (shifting into overdrive)

S: “S” mode driving

+: Upshift range

–: Downshift range

(b) Normal driving

1. Start the engine as instructed in “How to start the engine” on page 290 in Section 3. The transmission must be in “P” or “N”.
2. With your foot holding down the brake pedal, shift the selector lever to “D”.

When the lever is in the “D” position, the automatic transmission system will select the most suitable gear for running conditions such as normal cruising, hill climbing, etc.

Always use the “D” position for better fuel economy and quieter driving. In this position, shifting into the overdrive gear is possible. If the engine coolant temperature is low, the transmission will not shift into the overdrive gear even in the “D” position.

⚠ CAUTION

Never put your foot on the accelerator pedal while shifting.

3. Release the parking brake and brake pedal. Depress the accelerator pedal slowly for smooth starting.

(c) Driving in “S” mode

You can change the shift range position in the “S” mode. The shift range position can be switched between 5 (fifth range) and 1 (first range) by moving the selector lever up to the “+” side or down to the “–” side. The first shift range position is 4 (fourth range) when the selector lever is shifted to the “S” position.

The “S” mode indicator and the shift range position being used are shown on the instrument cluster.

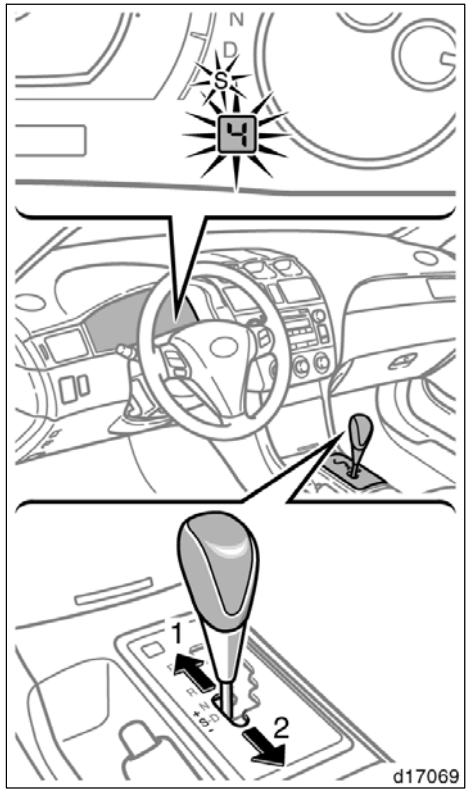

1: Upshift range
2: Downshift range

Shift range positions

- **“5” (Fifth range):**
  The most suitable gear is selected automatically between first and overdrive (fifth) gears according to the vehicle speed or driving conditions.
- **“4” (Fourth range):**
  The most suitable gear is selected automatically between first and fourth gears according to the vehicle speed or driving conditions. Slight engine braking will be obtained on a downhill road. Smooth running with less shifting will be obtained on an uphill road.
- **“3” (Third range):**
  The most suitable gear is selected automatically between first and third gears according to the vehicle speed or driving conditions. This range is to be used when stronger engine braking is necessary.
- **“2” (Second range):**
  First or second gear will be selected automatically according to the vehicle speed or driving conditions. This range is to be used when engine braking stronger than that of the “3” range position is necessary.
- **“1” (First range):**
  The gear is fixed in first regardless of vehicle speed or driving conditions. This range is to be used when maximum engine braking is necessary.

If you attempt to downshift the transmission when it is not possible to downshift due to high vehicle speed, a warning tone sounds twice.

NOTICE

Do not drive in the “3”, “2” or “1” range when driving at high speed or climbing a gentle slope for a long time. Otherwise the transmission or engine may overheat causing damage.

Maximum allowable speeds

To get on a highway or to pass slower traffic, maximum acceleration may be necessary. Make sure you observe the following maximum allowable speed in each range:

2.4 L 4–cylinder (2AZ–FE) engine

range	km/h (mph)
1	52 (32)
2	94 (58)
3	146 (90)

3.3 L V6 (3MZ–FE) engine

range	km/h (mph)
1	47 (29)
2	86 (53)
3	133 (83)

NOTICE

Do not downshift if you are going faster than the maximum allowable speed for the next lower range.

When the “S” mode indicator light does not come on even with the selector lever moved to the “S” position, there may be a problem somewhere in the system. Have your vehicle checked/repaired by your Toyota dealer as soon as possible. In this case, you can drive in the same condition as in the “D” position.

(d) Using engine braking

To use engine braking, you can downshift the transmission as follows:

- When driving in the “D” position—
  Shift the selector lever to “S” position.

  When driving in the “5” range within the “S” position—
  Move the selector lever down to the “–” side to select the “4” range.

  The transmission will downshift to fourth range and engine braking will be enabled.

  When the cruise control is being used, engine braking can not be enabled because the cruise control is not cancelled.

  For decreasing the vehicle speed, see “Cruise control” on page 163 in this Section.

- Move the selector lever down to the “–” side to select the “3” range. The transmission will downshift to third range when the vehicle speed drops down to or lower than the following speed, and stronger engine braking will be enabled.

  2.4 L 4–cylinder (2AZ–FE) engine
  . . . . . 141 km/h (88 mph)
  3.3 L V6 (3MZ–FE) engine
  . . . . . 129 km/h (80 mph)

- Move the selector lever down to the “–” side to select the “2” range. The transmission will downshift to second range when the vehicle speed drops down to or lower than the following speed, and more powerful engine braking than that of the “3” range position will be enabled.

  2.4 L 4–cylinder (2AZ–FE) engine
  . . . . . 89 km/h (55 mph)
  3.3 L V6 (3MZ–FE) engine
  . . . . . 83 km/h (51 mph)

- Move the selector lever down to the “–” side to select the “1” range. The transmission will downshift to first range when the vehicle speed drops down to or lower than the following speed, and maximum engine braking will be enabled.

  2.4 L 4–cylinder (2AZ–FE) engine
  . . . . . 40 km/h (24 mph)
  3.3 L V6 (3MZ–FE) engine
  . . . . . 39 km/h (24 mph)

⚠ CAUTION

Be careful when downshifting on a slippery surface. Abrupt shifting could cause the vehicle to skid or spin.

(e) Backing up

1. Bring the vehicle to a complete stop.
2. With the brake pedal held down with your foot, shift the selector lever to the “R” position.

NOTICE

Never shift into reverse while the vehicle is moving.

(f) Parking

1. Bring the vehicle to a complete stop.
2. Pull the parking brake lever up fully to securely apply the parking brake.
3. With the brake pedal pressed down, shift the selector lever to the “P” position.

CAUTION

Never attempt to move the selector lever into “P” position under any circumstances while the vehicle is moving. Serious mechanical damage and loss of vehicle control may result.

(g) Good driving practice

If the transmission repeatedly shifts up and down between third gear and overdrive when climbing a gentle slope, shift the selector lever into “S” position.

CAUTION

Always keep your foot on the brake pedal while stopped with the engine running. This prevents the vehicle from creeping.

NOTICE

Always use the brake pedal or the parking brake to hold the vehicle on an upgrade. Do not attempt to hold the vehicle using the accelerator pedal, as this can cause the transmission to overheat.

(h) If you cannot shift the lever out of “P” position

If you cannot shift the selector lever from the “P” position even though the brake pedal is depressed, use the shift lock override button. For instructions, see “If you cannot shift automatic transmission selector lever” on page 318 in Section 4.

Manual transmission

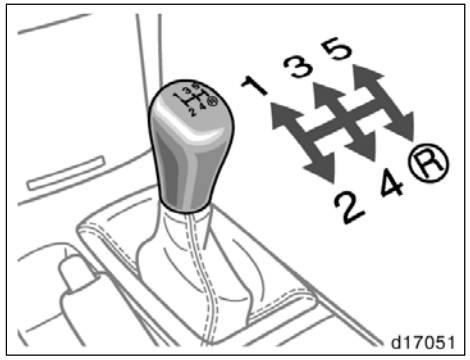

The shift pattern is conventional as shown above.

Press the clutch pedal down fully while shifting, and then release it slowly. Do not rest your foot on the pedal while driving, because it will cause clutch trouble. Do not use the clutch to hold the vehicle when stopped on an uphill grade—use the parking brake.

Maximum allowable speeds

To get on a highway or to pass slower traffic, maximum acceleration may be necessary. Make sure you observe the following maximum allowable speeds in each gear:

gear	km/h (mph)
1	53 (33)
2	92 (57)
3	142 (88)
4	194 (121)

NOTICE

Do not downshift if you are going faster than the maximum allowable speed for the next lower gear.

Good driving practice

If it is difficult to shift into reverse, put the transmission in neutral, release the clutch pedal momentarily, and then try again.

CAUTION

Be careful when downshifting on a slippery surface. Abrupt shifting could cause the vehicle to skid or spin.

NOTICE

- ***Do not use any gears other than first gear when starting off and moving forward. Doing so may damage the clutch.***
- ***Make sure the vehicle is completely stopped before shifting into reverse.***

Traction control system

The traction control system automatically helps prevent the spinning of front wheels when the vehicle is started or accelerated on slippery road surfaces.

When the engine switch is turned to “ON”, the system automatically turns on.

CAUTION

Under certain slippery road conditions, full traction of the vehicle and power against front wheels cannot be maintained, even though the traction control system is in operation. Do not drive the vehicle under any speed or maneuvering conditions which may cause the vehicle to lose traction control. In situations where the road surface is covered with ice or snow, your vehicle should be fitted with snow tires or tire chains. Always drive at an appropriate and cautious speed for the present road conditions.

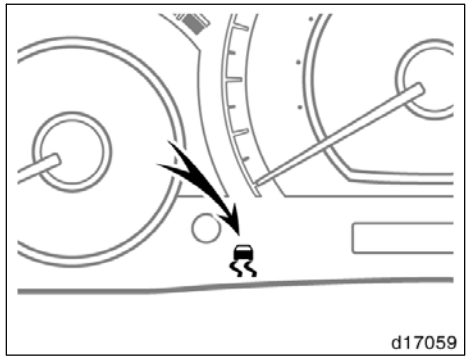

NORMAL DRIVING MODE

Leave the system on during the ordinary driving so that it can operate when needed.

You may hear a sound in the engine compartment for a few seconds when the engine is started or just after the vehicle begins to move. This means that the traction control system is in the self–check mode, but does not indicate a malfunction.

When the traction control system is operating, the following conditions occur:

- The system controls the spinning of the front wheels. At this time, the slip indicator light blinks.
- You may feel vibration or noise in your vehicle, caused by operation of the brakes. This indicates the system is functioning properly.

The slip indicator light comes on for a few seconds when the engine switch is turned to “ON”. If the indicator light does not come on when the ignition is turned on, contact your Toyota dealer.

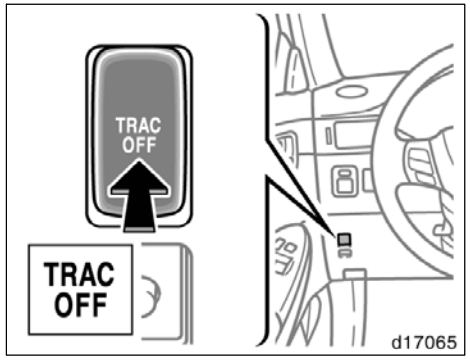

TRACTION CONTROL OFF MODE

When getting the vehicle out of mud or newly fallen snow, etc., turn off the traction control system. This system that controls engine performance interferes with the process of freeing front wheels.

To turn off: Push “TRAC OFF” switch.

The “TRAC OFF” indicator light will come on.

The vehicle stability control system is always activated, even if the traction control system is turned off.

To turn on: Push “TRAC OFF” switch once again.

The “TRAC OFF” indicator light will go off.

“TRAC OFF” indicator light comes on for a few seconds when the engine switch is turned to “ON”. It will come on again when you push the “TRAC OFF” switch to turn off the system.

In the following cases, contact your Toyota dealer:

- The indicator light does not come on when the engine switch is turned “ON”.
- The indicator light remains on after the ignition is turned on.
- The indicator light comes on with the normal driving mode while driving.

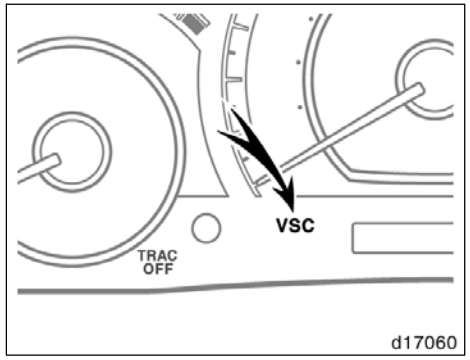

“VSC” warning light

This light warns that there is a problem somewhere in the traction control system or the vehicle stability control system.

The light will come on when the engine switch is turned to “ON” and will go off after a few seconds.

If the light comes on while driving, the system does not work. However, as conventional braking operates when applied, there is no problem to continue your driving.

In the following cases, contact your Toyota dealer:

- The warning light does not come on after the engine switch is turned to “ON”.
- The warning light remains on after the engine switch is turned to “ON”.
- The warning light comes on while driving.

The “TRAC OFF” indicator light will come on when the “VSC” warning light comes on even if the “TRAC OFF” switch is not pushed.

Vehicle stability control system

The vehicle stability control system helps provide integrated control of the systems such as anti–lock brake system, traction control, engine control, etc. This system automatically controls the brakes and engine to help prevent the vehicle from skidding when cornering on a slippery road surface or operating steering wheel abruptly.

The vehicle stability control system is activated when your vehicle speed reaches or exceeds 15 km/h (9 mph), and will deactivate when the vehicle speed reduces to below 15 km/h (9 mph).

You may hear a sound in the engine compartment for a few seconds when the engine is started or just after the vehicle begins to move. This means that the system is in the self–check mode, but does not indicate a malfunction.

CAUTION

- **Do not rely excessively on the vehicle stability control system. Even if the vehicle stability control system is operating, you must always drive carefully and attentively to avoid serious injury. Reckless driving will result in an unexpected accident. If the slip indicator light flashes, an alarm sounds, and special care should be taken while driving.**
- **Only use tires of specified size. The size, manufacture, brand and tread pattern for all 4 tires should be the same. If you use the tires other than specified, or different type or size, the vehicle stability control system may not function correctly. When replacing the tires or wheels, contact your Toyota dealer. (See “Checking and replacing tires” on page 352 in Section 7–2.)**
- **In situations where the road surface is covered with ice or snow, your vehicle should be fitted with snow tires or tire chains.**

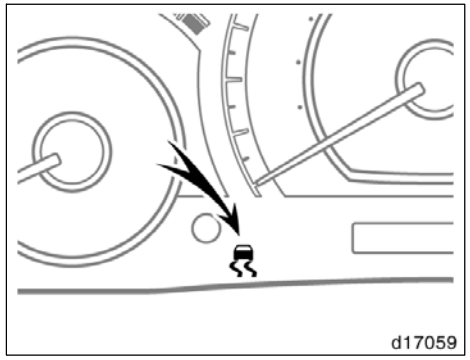

If the vehicle is going to skid during driving, the slip indicator light blinks and an alarm sounds intermittently. Special care should be taken while driving.

The slip indicator light comes on for a few seconds when the engine switch is turned to “ON”. If the indicator light does not come on when the ignition is turned on, contact your Toyota dealer.

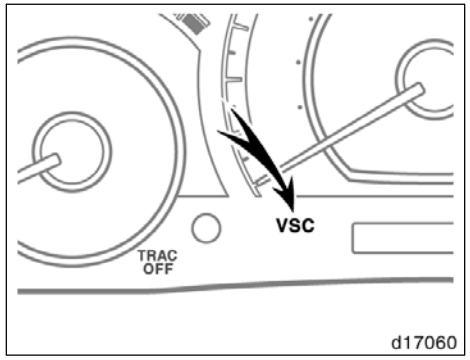

“VSC” warning light

This light warns that there is a problem somewhere in the vehicle stability control system or the traction control system.

The light will come on when the engine switch is turned to “ON” and will go off after a few seconds.

If the light comes on while driving, the system does not work. However, as conventional braking operates when applied, there is no problem to continue your driving.

In the following cases, contact your Toyota dealer:

- The warning light does not come on after the engine switch is turned to “ON”.
- The warning light remains on after the engine switch is turned to “ON”.
- The warning light comes on while driving.

The “TRAC OFF” indicator light will come on when the “VSC” warning light comes on even if the “TRAC OFF” switch is not pushed.

Tire pressure warning system

The tire pressure warning system warns you that the tire inflation pressure is low.

The tire pressure warning system is not a substitute for checking normal tire inflation pressure. Check the tire inflation pressure with a tire pressure gauge regularly.

⚠ CAUTION

The warning system may not activate immediately if blowout or sudden air loss should occur.

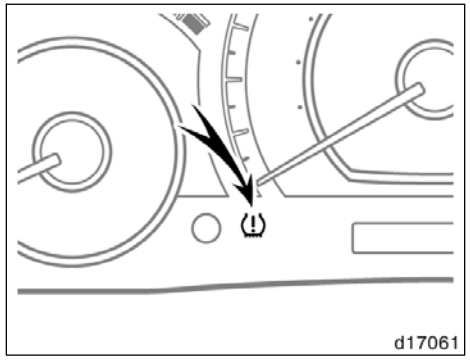

The tire pressure warning light comes on when the engine switch is turned to the “ON” position and goes off after a few seconds. This means the tire pressure warning system is operating properly. If the tire inflation pressure becomes low, the light comes on again. In this case, adjusting the tire inflation pressure will turn off the light after a few minutes. If the light comes on after blinking for 1 minute, the tire pressure warning system is not working properly.

Indicator status	Meanings	Do this
ON	Tire inflation pressure is low	Adjust the tire inflation pressure
ON after blinking for 1 minute	Tire pressure warning system malfunction	Have the system checked at your Toyota dealer

⚠ CAUTION

If the tire pressure warning light comes on, be sure to observe the following precautions. Failure to do so could cause loss of vehicle control and result in death or serious injury.

- **Stop your vehicle in a safe place as soon as possible. Adjust the tire inflation pressure immediately.**
- **If the tire pressure warning light comes on even after tire inflation pressure adjustment, it is probable that you have a flat tire. Check the tires. If the tire is flat, change to the spare tire and have the flat tire repaired by the nearest Toyota dealer.**
- **Avoid abrupt maneuvering and braking. If the vehicle tires deteriorate, you could lose control of the steering wheel or the brakes.**

The tire pressure warning light may turn on due to natural causes such as natural air leaks or tire inflation pressure changes caused by temperature. In this case, adjusting the tire inflation pressure will turn off the light after a few minutes.

Pushing the tire pressure warning reset switch should not turn off the tire pressure warning light. Adjusting the tire inflation pressure will turn off the light.

The spare tire (except compact spare tire) is also equipped with the tire pressure warning valve and transmitter. The tire pressure warning light will turn on if the tire inflation pressure of the spare tire is low. If a tire goes flat, even though the flat tire is replaced with the spare tire, the warning light does not turn off. Replace the spare tire with the repaired tire and adjust the proper tire inflation pressure. The tire pressure warning light will turn off after a few minutes.

The compact spare tire is not equipped with the tire pressure warning valve and transmitter. If a tire goes flat, the warning light will not turn off even though the flat tire is replaced with the spare tire. Replace the spare tire with the repaired tire and adjust the proper tire inflation pressure. The tire pressure warning light will turn off after a few minutes.

⚠ CAUTION

Each tire, including the spare (if provided), should be checked monthly when cold and inflated to the inflation pressure recommended by the vehicle manufacturer on the vehicle placard or tire inflation pressure label (tire and load information label). (If your vehicle has tires of a different size than the size indicated on the vehicle placard or tire inflation pressure label (tire and load information label), you should determine the proper tire inflation pressure for those tires.)

As an added safety feature, your vehicle has been equipped with a tire pressure monitoring system (TPMS–tire pressure warning system) that illuminates a low tire pressure telltale (tire pressure warning light) when one or more of your tires is significantly under–inflated. Accordingly, when the low tire pressure telltale (tire pressure warning light) illuminates, you should stop and check your tires as soon as possible, and inflate them to the proper pressure. Driving on a significantly under–inflated tire causes the tire to overheat and can lead to tire failure. Under–inflation also reduces fuel efficiency and tire tread life, and may affect the vehicle’s handling and stopping ability.

Please note that the TPMS (tire pressure warning system) is not a substitute for proper tire maintenance, and it is the driver’s responsibility to maintain correct tire pressure, even if under–inflation has not reached the level to trigger illumination of the TPMS low tire pressure telltale (tire pressure warning light).

Your vehicle has also been equipped with a TPMS (tire pressure warning system) malfunction indicator to indicate when the system is not operating properly. The TPMS (tire pressure warning system) malfunction indicator is combined with the low tire pressure telltale (tire pressure warning light). When the system detects a malfunction, the telltale will flash for approximately one minute and then remain continuously illuminated. This sequence will continue upon subsequent vehicle start–ups as long as the malfunction exists. When the malfunction indicator is illuminated, the system may not be able to detect or signal low tire pressure as intended.

TPMS (tire pressure warning system) malfunctions may occur for a variety of reasons, including the installation of replacement or alternate tires or wheels on the vehicle that prevent the TPMS (tire pressure warning system) from functioning properly. Always check the TPMS (tire pressure warning system) malfunction telltale after replacing one or more tires or wheels on your vehicle to ensure that the replacement or alternate tires and wheels allow the TPMS (tire pressure warning system) to continue to function properly.

NOTICE

- ***Do not use liquid sealants for a flat tire as tire pressure warning valve and transmitter will be damaged.***
- ***When the tires must be repaired or replaced, have them repaired or replaced by the nearest Toyota dealer or authorized tire dealer. The tire pressure warning valves and transmitters will be affected by the installation or removal of tires.***

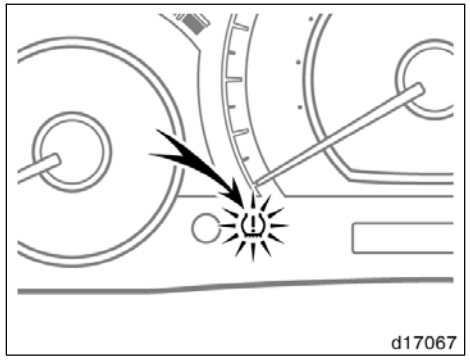

IF THE TIRE PRESSURE WARNING LIGHT COMES ON AFTER BLINKING FOR 1 MINUTE...

If the tire pressure warning light comes on after blinking for 1 minute when the engine switch is turned to the “ON” position, the tire pressure warning system is not working properly.

The system will be disabled in the following conditions:
(When the condition becomes normal, the system will work properly.)

- If tires not equipped with tire pressure warning valves and transmitters are used.
- If the ID code on the tire pressure warning valves and transmitters is not registered in the tire pressure warning computer.
- If the tire inflation pressure is more than 500 kPa (5.1 kgf/cm^2 or bar, 73 psi).

The system may be disabled in the following conditions:
(When the condition becomes normal, the system will work properly.)

- If electronic devices or facilities using similar radio wave frequencies are nearby.
- If a radio set at similar frequencies is in use in the vehicle.
- If a window tint that affects the radio wave signals is installed.
- If there is a lot of snow or ice on the vehicle, in particular around the wheels or wheel housings.
- If non–genuine Toyota wheels are used.
- If tire chains are used.
- If the spare tire (except compact spare tire) is in a location subject to poor radio wave signal reception.
- If a large metallic object which can interfere with signal reception is put in the trunk.

If the tire pressure warning light continues to come on after blinking for 1 minute when the engine switch is turned to the “ON” position, have the system checked by your Toyota dealer.

Pushing the tire pressure warning reset switch should not turn off the tire pressure warning light.

Even if you use genuine wheels, the tire pressure warning system may not work properly with some types of tires.

Pushing the tire pressure warning reset switch should not turn off the tire pressure warning light.

For vehicles sold in U.S.A.

This device complies with Part 15 of the FCC Rules. Operation is subject to the following two conditions:

(1) This device may not cause harmful interference, and (2) this device must accept any interference received, including interference that may cause undesired operation.

NOTICE:
This equipment has been tested and found to comply with the limits for a Class B digital device, pursuant to Part 15 of the FCC Rules. These limits are designed to provide reasonable protection against harmful interference in a residential installation. This equipment generates, uses and can radiate radio frequency energy and, if not installed and used in accordance with the instructions, may cause harmful interference to radio communications. However, there is no guarantee that interference will not occur in a particular installation. If this equipment does cause harmful interference to radio or television reception, which can be determined by turning the equipment off and on, the user is encouraged to try to correct the interference by one or more of the following measures:

- Reorient or relocate the receiving antenna.
- Increase the separation between the equipment and receiver.
- Connect the equipment into an outlet on a circuit different from that to which the receiver is connected.
- Consult the dealer or an experienced radio/TV technician for help.

FCC WARNING:
Changes or modifications not expressly approved by the party responsible for compliance could void the user’s authority to operate the equipment.

For vehicles sold in Canada

Operation is subject to the following two conditions:

(1) this device may not cause interference, and (2) this device must accept any interference, including interference that may cause undesired operation of the device.

REPLACING TIRES AND WHEELS

When replacing the tires and wheels, be sure to install tire pressure warning valves and transmitters. ID codes on the tire pressure warning valves and transmitters are registered in the tire pressure warning computer. When replacing a tire pressure warning valve and transmitter, it is necessary to register the ID code of tire pressure warning valve and transmitter. Have the ID code registered by your Toyota dealer.

If the ID code is not registered, the system will not work properly. After driving for about 20 minutes, the tire pressure warning light comes on after blinking for 1 minute to indicate a system malfunction.

NOTICE

When the tires or tire pressure warning valves and transmitters must be replaced, have them replaced by your Toyota dealer. The tire pressure warning valves and transmitters will be affected by the installation or removal of tires.

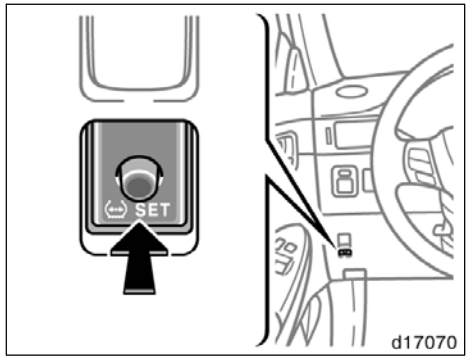

TIRE PRESSURE WARNING RESET SWITCH

When initializing the system, the present tire inflation pressure is stored as standard. The tire pressure warning system determines decreased air pressure by comparing the present and the standard tire inflation pressures. When you change the set tire inflation pressure, it is necessary to initialize the tire pressure warning system.

- When changing the tire size.
- When rotating the tire on vehicles differing with front and rear tire inflation pressure.
- When changing the tire inflation pressure by changing traveling speed or load weight, etc.

To initialize the system, perform the following:

1. Park the vehicle in a safe place and turn the engine switch to “LOCK” position.
2. Adjust the pressure of all the installed tires to the specified cold tire inflation pressure level. (See “Tires” on page 377 in Section 8.)
3. Turn the engine switch to the “ON” position.
4. Push and hold the tire pressure warning reset switch until the tire pressure warning light blinks slowly three times.
5. Wait for a few minutes with the engine switch in “ON” position, and then turn the engine switch to the “LOCK” position.

If you push the tire pressure warning reset switch while vehicle is moving, initialization is not performed.

If you push the tire pressure warning reset switch accidentally and initialization is performed, adjust the tire inflation pressure to the specified level and initialize the system again.

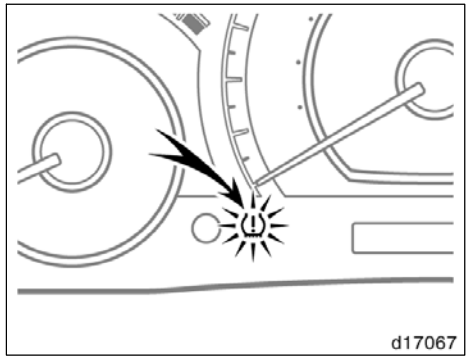

If the tire pressure warning light does not blink slowly three times when you push and hold the tire pressure warning reset switch, initialization has failed and the tire pressure warning system may not work properly. In this case, initialize the system again. If initialization cannot be performed, have the system checked at your Toyota dealer.

⚠ CAUTION

Do not push the tire pressure warning reset switch without first adjusting the tire inflation pressure to the specified level. Otherwise, the tire pressure warning light may not come on even if the tire inflation pressure is low, or it may come on when the tire inflation pressure is actually normal.

Parking brake

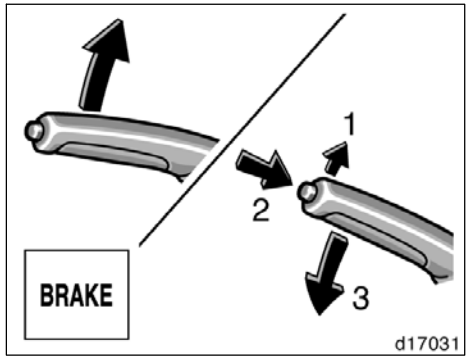

For the U.S.A.

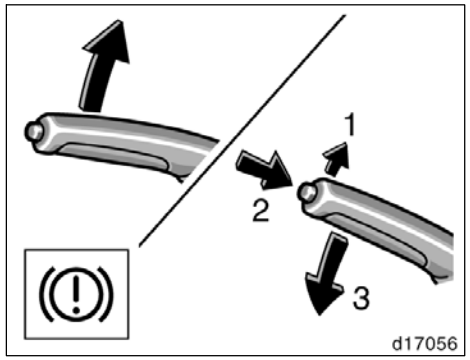

For Canada

When parking, firmly apply the parking brake to avoid inadvertent creeping.

To set: Pull up the lever. For better holding power, first depress the brake pedal and hold it while setting the parking brake.

To release: Pull up the lever slightly (1), press the lock release button (2), and lower (3).

To remind you that the parking brake is set, the parking brake reminder light in the instrument panel remains on until you release the parking brake.

⚠ CAUTION

Before driving, be sure the parking brake is fully released and the parking brake reminder light is off.

Cruise control

The cruise control is designed to maintain a set cruising speed without requiring the driver to operate the accelerator. Cruising speed can be set to any speed above 40 km/h (25 mph).

Within the limits of the engine’s capabilities, cruising speed can be maintained up or down grades. However, changes in vehicle speed may occur on steeper grades.

⚠ CAUTION

- **To help maintain maximum control of your vehicle, do not use the cruise control when driving in heavy or varying traffic, or on slippery (rainy, icy or snow–covered) or winding roads.**
- **Avoid vehicle speed increases when driving downhill. If the vehicle speed is too fast in relation to the cruise control set speed, cancel the cruise control then downshift the transmission to use engine braking to slow down.**

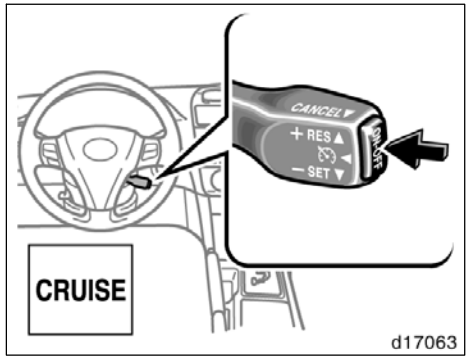

TURNING THE SYSTEM ON AND OFF

To turn the cruise control on, press the “ON–OFF” button. The “CRUISE” indicator light on the instrument panel will come on to indicate that the cruise control is operational. Pressing the “ON–OFF” button again turns the system off.

When the system is turned off, cruising speed must be reset when the cruise control is turned on again.

⚠ CAUTION

To avoid accidentally engaging the cruise control, turn the system off when it is not in use. Make sure the “CRUISE” indicator light is off.

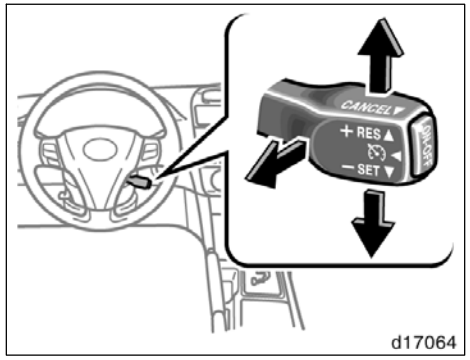

SETTING THE DESIRED SPEED

On vehicles with automatic transmission, the transmission must be in the “D” position or the shift range position must be in “4” (fourth range) or “5” (fifth range) in “S” mode before you set the cruising speed.

Bring your vehicle to the desired speed, push the lever down in the “– SET” direction and release it. This sets the vehicle at that speed. If the speed is not satisfactory, tap the lever up for a faster speed, or tap it down for a slower speed. Each tap changes the set speed by 1.6 km/h (1.0 mph). You can now take your foot off the accelerator pedal.

If you need acceleration—for example, when passing—depress the accelerator pedal enough for the vehicle to exceed the set speed. When you release it, the vehicle will return to the speed set prior to the acceleration.

⚠ CAUTION

For manual transmission:

While driving with the cruise control on, do not shift to neutral without depressing the clutch pedal, as this may cause engine racing or overreving.

CANCELLING THE CRUISE CONTROL

The cruise control may be temporarily cancelled by the driver or by the system itself under certain circumstances. Temporary cancellation allows the set cruising speed to remain in memory.

The cruise control can be temporarily cancelled by doing the following:

- Pulling the lever in the “CANCEL” direction and releasing it
- Depressing the brake pedal
- Depressing the clutch pedal

Under certain circumstances, the cruise control is temporarily cancelled:

- When vehicle speed falls below 40 km/h (25 mph)
- When vehicle stability control is activated

When vehicle speed drops 16 km/h (10 mph) below the set speed, the cruise control is cancelled and the set speed is erased from memory.

The “CRUISE” indicator light remains on to indicate that the system is still in operation.

To turn the cruise control off, press the “ON–OFF” button. Make sure the “CRUISE” indicator light is off.

If the cruise control automatically cancels out other than for the above cases, have your vehicle checked by your Toyota dealer at the earliest opportunity.

RESUMING THE CRUISE CONTROL

If the cruise control is temporarily cancelled, the cruising speed can be resumed by pushing the lever up in the “+ RES” direction.

Vehicle speed must be above 40 km/h (25 mph).

RESETTING TO A FASTER SPEED

Push the lever up in the “+ RES” direction and hold it. Release the lever when the desired speed is attained. While the lever is held up, the vehicle will gradually gain speed.

However, a faster way to reset is to accelerate the vehicle and then push the lever down in the “– SET” direction.

RESETTING TO A SLOWER SPEED

Push the lever down in the “– SET” direction and hold it. Release the lever when the desired speed is attained. While the lever is held down, the vehicle speed will gradually decrease.

However, a faster way to reset is to depress the brake pedal and then push the lever down in the “– SET” direction.

Vehicles with automatic transmission—Even if you downshift from the “D” to the “S” “5” to the “4” in “S” mode with the cruise control on, engine braking will not be enabled because the cruise control is not cancelled. To decrease the vehicle speed, reset to a slower speed with the cruise control lever or depress the brake pedal. If you use the brake pedal, cruise control is cancelled.

CRUISE CONTROL FAILURE WARNING

If the “CRUISE” indicator light flashes when using the cruise control, press the “ON–OFF” button to turn the system off and then press it again to turn it on.

If any of the following conditions then occurs, there is some trouble in the cruise control system.

- The indicator light does not come on.
- The indicator light flashes again.
- The indicator light goes out after it comes on.

If this is the case, contact your Toyota dealer and have your vehicle inspected.

SECTION 1 – 8

OPERATION OF INSTRUMENTS AND CONTROLS

Audio and hands–free phone systems

Reference 168
Using your audio system 168
Audio remote controls 180
AUX adapter 181
Audio system operating hints 182
Hands–free phone system 189

For vehicle equipped with Navigation system, please refer to the separate “Navigation System Owner’s Manual”.

Reference

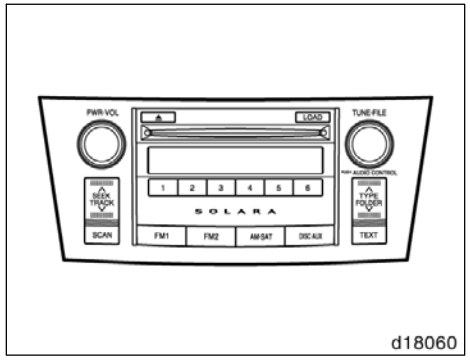

AM·FM radio/compact disc player with changer (with XM® Satellite Radio* controller)

*: Use of satellite radio requires XM® tuner and service. Contact your Toyota dealer for details.

Using your audio system——Some basics

This section describes some of the basic features on Toyota audio systems. Some information may not pertain to your system.

Your audio system works when the engine switch is in the “ACC” or “ON” position.

TURNING THE SYSTEM ON AND OFF

Push “PWR·VOL” to turn the audio system on and off.

Push “AM·SAT*”, “FM1”, “FM2” or “DISC·AUX” to turn on that function without pushing “PWR·VOL”. To turn on the compact disc player, a compact disc must be loaded in the player.

You can turn on the compact disc player by inserting a compact disc.

You can turn off the compact disc player by ejecting the compact disc. If the audio system was previously off, then the entire audio system will be turned off when you eject the compact disc. If the radio was previously playing, it will come on again.

*: Use of satellite radio requires XM® tuner and service. Contact your Toyota dealer for details.

SWITCHING BETWEEN FUNCTIONS

Push “FM1”, “FM2”, “AM·SAT*” or “DISC·AUX” if the system is already on but you want to switch from one function to another.

*: Use of satellite radio requires XM® tuner and service. Contact your Toyota dealer for details.

LISTENING TO THE XM® SATELLITE RADIO BROADCAST*

To listen to a satellite radio broadcast in your vehicle, an additional genuine Toyota satellite receiver and antenna (or equivalents) must be purchased and installed. A subscription to the XM® Satellite Radio service is also necessary.

How to subscribe to an XM® Satellite Radio

An XM® Satellite Radio is a tuner designed exclusively to receive broadcasts provided under a separate subscription. Availability is limited to the 48 contiguous U.S. states and 10 Canadian provinces.

How to subscribe:
You must enter into a separate service agreement with the XM® Satellite Radio in order to receive satellite broadcast programming in the vehicle. Additional activation and service subscription fees apply that are not included in the purchase price of the vehicle and optional digital satellite tuner. For complete information on subscription rates and terms, or to subscribe to the XM® Satellite Radio,

U.S.A.—

Visit on the web at www.xmradio.com or call 1–800–967–2346.

Canada—

Visit on the web at www.xmradio.ca or call 1–877–438–9677.

The XM® Satellite Radio is solely responsible for the quality, availability and content of the satellite radio services provided, which are subject to the terms and conditions of the XM® Satellite Radio customer service agreement.

Customers should have their radio ID ready; the radio ID can be found by tuning to “channel 000” on the radio. For details, see “Displaying the radio ID” below.

All fees and programming are the responsibility of the XM® Satellite Radio and are subject to change.

Satellite tuner technology notice:
Toyota’s satellite radio tuners are awarded Type Approval Certificates from XM® Satellite Radio Inc. as proof of compatibility with the services offered by the XM® Satellite Radio.

Displaying the radio ID

Each XM® tuner is identified with a unique radio ID. You will need the radio ID when activating XM® service or when reporting a problem.

If you select the “CH 000” using the “TUNE·FILE” button, the ID code of 8 alphanumeric characters appears. If you select another channel, display of the ID code is canceled. The channel (000) alternates the display between the radio ID and the specific radio ID code.

*: Use of satellite radio requires XM® tuner and service. Contact your Toyota dealer for details.

TONE AND BALANCE

For details about your system’s tone and balance controls, see the description of your own system.

Tone

How good an audio program sounds to you is largely determined by the mix of the treble, midrange (JBL brand audio system* only), and bass levels. In fact, different kinds of music and vocal programs usually sound better with different mixes of treble, midrange, and bass.

You can adjust sound characteristics. Different sound characteristics can be recorded for each audio source.

*: If a JBL brand audio system is installed, the “JBL” logo is shown on the panel.

Balance

A good balance of the left and right stereo channels and of the front and rear sound levels is also important.

Keep in mind that if you are listening to a stereo recording or broadcast, changing the right/left balance will increase the volume of one group of sounds while decreasing the volume of another.

YOUR RADIO ANTENNA

Coupe—Your vehicle has an antenna printed on the inside of the rear window.

NOTICE

Putting a film (especially a conductive or metallic film) on the rear window will noticeably reduce the sensitivity of the radio.

Convertible—Your vehicle has a mast type antenna.

To remove the antenna, carefully turn it counterclockwise.

YOUR COMPACT DISC PLAYER WITH CHANGER

When you insert a disc, push the “LOAD” button and gently push the disc in with the label side up. The player will play from track 1 through to the end of the disc. Then it will play from track 1 of the next disc.

The player is intended for use with 12 cm (4.7 in.) discs only.

NOTICE

- ***Do not insert two discs simultaneously, or it will cause damage to the compact disc player. Insert only one compact disc into the slot at a time.***
- ***Never try to disassemble or oil any part of the compact disc player. Do not insert anything other than compact discs into the slot.***

—Controls and features

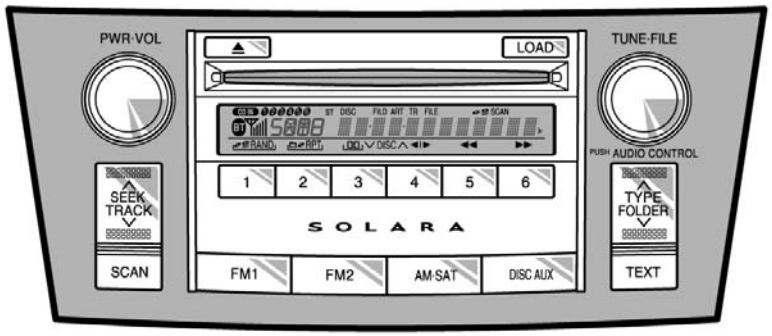

d18061y

Details of specific buttons, controls and features are described in the alphabetical list that follows.

1 2 3 4 5 6 (Preset buttons)

These buttons are used to preset and tune in radio stations.

To preset a station to a button: Tune in the desired station. (See “TUNE·FILE” or “SEEK/TRACK”.) Push and hold down the button until you hear a beep—this will set the station to the button. The preset button number will appear on the display.

To recall a preset station: Push the button for the station you want. The preset button number and station frequency will appear on the display.

This radio can store one AM and two FM stations for each button. (The display will show “AM”, “FM1”, or “FM2” when you push “AM·SAT”, or “FM” button.)

XM® Satellite Radio*—

These buttons are used to preset and tune in radio channels.

To preset a channel to a button: Tune in the desired channel. (See “TUNE·FILE” or “SEEK/TRACK”.) Push and hold down the button until you hear a beep—this will set the channel to the button. The preset button number will appear on the display.

To recall a preset channel: Push the button for the channel you want. The preset button number and channel number will appear on the display.

This radio can store three XM® channels for each button. (The display will show “SAT1”, “SAT2” or “SAT3” when you push “AM·SAT” button.)

*: Use of satellite radio requires XM® tuner and service. Contact your Toyota dealer for details.

⏏ (Eject button)

This button is used to eject one or all compact discs.

To eject the current compact disc, push and release the compact disc eject button.

To eject a specific disc, push “∨” (preset button 3) or “∧” (preset button 4) until the number of the disc you want to eject is displayed. Push and release the eject button.

To eject all discs at a time, press and hold the eject button until you hear a beep. The last compact disc played before pushing the button will be ejected first. If the ejected disc is not removed for a long time, the eject function will be cancelled.

◀◀/▶▶ (Reverse/Fast–forward button)

Push and hold “▶▶” (preset button 6) or “◀◀” (preset button 5) to fast forward or reverse within a compact disc. When you release the button, the player will resume playing.

AM·SAT (AM band and XM® Satellite Radio*)

Push the “AM·SAT” button to turn on the radio and select the AM or XM® band. “AM”, “SAT1”, “SAT2” or “SAT3” will appear on the display.

Error messages

If the satellite radio tuner malfunctions, your audio system will display following error messages.

“ANTENNA”:

- The XM® antenna is not connected. Check whether the XM® antenna cable is attached securely.
- A short–circuit occurs in the antenna or the surrounding antenna cable. See a Toyota certified dealer.

“UPDATING”:

- You have not subscribed to the XM® Satellite Radio. The radio is being updated with the latest encryption code. Contact the XM® Satellite Radio for subscription information. When a contact is canceled, you can choose the “CH000” and all free–to–air channels.
- The premium channel you selected is not authorized. Wait for about 2 seconds until the radio returns to the previous channel or “CH001”. If it does not change automatically, select another channel. If you want to listen to the premium channel, contact the XM® Satellite Radio.

“NO SIGNAL”: The XM® signal is too weak at the current location. Wait until your vehicle reaches a location with a stronger signal.

“LOADING”: The unit is acquiring audio or program information. Wait until the unit has received the information.

“OFF AIR”: The channel you selected is not broadcasting any programming. Select another channel.

“– – –”: The channel you selected is no longer available. Wait for about 2 seconds until the radio returns to the previous channel or “CH001”. If it does not change automatically, select another channel.

The XM® Listener Care Center is also available on the phone, please call 1–800–967–2346 (U.S.A.) or 1–877–438–9677 (Canada).

*: Use of satellite radio requires XM® tuner and service. Contact your Toyota dealer for details.

AUDIO CONTROL (Tone and sound balance adjustment function)

Each time you push the “AUDIO CONTROL” knob, the mode changes. To adjust the tone and balance, turn the knob.

The JBL brand audio system*—

BAS: Adjusts low–pitched tones. The display ranges from –5 to 5.

TRE: Adjusts high–pitched tones. The display ranges from –5 to 5.

FAD: Adjusts the sound balance between the front and rear speakers. The display ranges from F7 to R7.

BAL: Adjusts the sound balance between the right and left speakers. The display ranges from L7 to R7.

ASL: The Automatic Sound Levelizer can be turned on by turning the knob. The ASL system automatically adjusts volume and tone in accordance with the driving speed. This helps ensure an optimal listening experience even when road, wind or other ambient noise levels rise.

Except the JBL brand audio system*—

Each time you push the “AUDIO CONTROL” knob, the mode changes. To adjust the tone and balance, turn the knob.

BAS: Adjusts low–pitched tones. The display ranges from –5 to 5.

MID: Adjusts mid–pitched tones. The display ranges from –5 to 5.

TRE: Adjusts high–pitched tones. The display ranges from –5 to 5.

FAD: Adjusts the sound balance between the front and rear speakers. The display ranges from F7 to R7.

BAL: Adjusts the sound balance between the right and left speakers. The display ranges from L7 to R7.

Switching over the Speed Automatic Sound Levelizer (ASL) level

ASL: The Automatic Sound Levelizer can be turned on and off by turning the knob. In addition, turning the knob allows you to select from LOW, MID, and HIGH settings. The ASL system automatically adjusts volume and tone in accordance with the driving speed. This helps ensure an optimal listening experience even if noise levels rise while driving.

*: If a JBL brand audio system is installed, the “JBL” logo is shown on the panel.

DISC·AUX (Compact disc)

Push the “DISC·AUX” button to play a compact disc.

When the audio system is set to compact disc operation, the display shows the track, or track and disc number currently being played.

To switch between CD and AUX (external device) modes, press the “DISC·AUX” button. The AUX mode is only available when AUX adapter is connected to the system. When the AUX adapter is in use, “AUX” will appear on the display.

Error messages

If the player malfunctions, your audio system will display following error messages.

“WAIT”: The compact disc player unit may be too hot. Allow the player to cool down.

“ERROR 1”: The disc may be dirty, damaged or inserted incorrectly (up–side down). Clean the disc and re–insert it.

“NO DISC”: Eject the disc or magazine. Set the disc or magazine again.

“ERROR 3”: There is a problem inside the system.

“ERROR 4”: Over–current. Ask your Toyota dealer to inspect.

If “NO MUSIC” appears on the display, it indicates that a disc with no MP3/WMA data has been inserted. Remove the disc from the player and insert an MP3/WMA data disc.

If the malfunction still exists, take your vehicle to your Toyota dealer.

∨ **DISC** ∧

Use these buttons to select a disc you want to listen to.

Push “∨” (preset button 3) or “∧” (preset button 4) until the number of the disc you want to listen appears on the display.

FM1 FM2

Push the “FM1” or “FM2” button to turn on the radio and select the FM band. “FM1” or “FM2” will appear on the display. This system allows you to set twelve FM stations, two for each of the preset button.

TYPE/FOLDER (Type/Folder up/down)

Radio

XM® Satellite Radio*—

When you push the “∨” or “∧” side of the “TYPE/FOLDER” button while receiving a XM® channel, the current channel category appears on the display.

When the channel category appears, push either “∨” or “∧” side of the “TYPE/FOLDER” button to switch to the next or previous category.

*: Use of satellite radio requires XM® tuner and service. Contact your Toyota dealer for details.

MP3/WMA player

To skip up or down to a different folder:
Push “∧” or “∨” side of the “TYPE/FOLDER” several times until the number of the folder you want to listen to appears on the display.

To jump to the first file in the first folder: Push and hold the “∨” side of the button until you hear a beep.

When playing a disc featuring both audio data (CD–DA) and MP3/WMA files, audio data (CD–DA) is played.

LOAD

This button is used to load the compact discs in the compact disc player. This player can store up to six discs.

To load one compact disc only, quickly push and release the button. When the indicators on both sides of the slot turn green, insert a compact disc. After the disc is loaded, the shutter of the slot will close.

If no compact disc is inserted, the shutter will close after 15 seconds.

To load multiple compact discs, push and hold the button (until you hear a beep when the audio system is on). When the indicators on both sides of the slot turn green, insert the first compact disc. After the disc is loaded, the shutter of the slot will close. After a few seconds, the shutter will automatically open again and the indicators will turn green so the next disc can be inserted. The same process can be applied for loading the rest of the discs. If the player is full of discs, “DISC FULL” will appear on the display.

If no compact disc is inserted, the shutter will close after 15 seconds.

PWR·VOL (Power and Volume)

Push “PWR·VOL” to turn the audio system on and off. Turn “PWR·VOL” to adjust the volume.

RAND (Random)

There are two random features—you can either listen to the tracks on one compact disc in random order, or listen to the tracks on all the compact discs in the magazine in random order.

To play the tracks on one disc in random order:
Quickly push and release “RAND” (preset button 1). “RAND” will appear on the display and the player will perform the tracks on the disc you are listening to in random order. To turn off the random feature, push this button again.

To play all the tracks in the magazine in random order:
Push and hold “RAND” (preset button 1) until you hear a beep. “RAND” will appear on the display and the player will perform all the tracks on all the discs in the magazine in random order. To turn off the random feature, push this button again.

MP3/WMA player

There are two random playback features—you can either listen to all of the files on the compact discs in random order. You can also listen to the files in a single folder in random order.

To randomly play the files in a folder:
Quickly push and release “RAND” (preset button 1). “RAND” will appear on the display.

To randomly play all of the files on the compact disc:
Push and hold “RAND” (preset button 1) until you hear a beep. “RAND” will appear on the display and the player will play all of the files on the disc in random order. To turn off the random playback feature, push this button again.

RPT (Repeat)

Compact disc player

There are two repeat features—you can either replay a disc track or a whole compact disc.

Repeating a track:
Quickly push and release “RPT” (preset button 2) while the track is playing. “RPT” will appear on the display. When the track ends, it will automatically replay. To turn off the repeat feature, push this button again.

Repeating a disc:
Push and hold “RPT” (preset button 2) until you hear a beep. “RPT” will appear on the display. The player will repeat all the tracks on the disc you are listening to. When the disc ends, the player will automatically go back to the first track on the disc and replay. To turn off the repeat feature, push this button again.

MP3/WMA player

There are two repeat features—you can repeat a signal file or an entire folder.

Repeating a file:
Quickly push and release “RPT” (preset button 2) while the file is playing. “RPT” will appear on the display. When the file ends, it will repeat automatically. This process will be continued until you push the button again to turn off the repeat feature.

Repeating a folder:
Push and hold “RPT” (preset button 2) until you hear a beep. “RPT” will appear on the display. The player will repeat all of the files in the folder. When the last file in the folder ends, the folder will repeat from the beginning. To turn off the repeat feature, push this button again.

SCAN

Radio

You can either scan all the frequencies on a band or scan only the preset stations for that band.

To scan the preset stations:
Push and hold the “SCAN” button until you hear a beep. The radio will tune in the next preset station up the band, stay there for 5 seconds, and then move to the next preset station. To stop scanning, push this button again.

To scan all the frequencies:
Quickly push and release the “SCAN” button. The radio will find the next station up the station band, stay there for 5 seconds, and then scan again to the next station. To stop scanning, push this button again.

XM® Satellite Radio*—

You can either scan the currently selected channel category or scan only the preset channels for that band.

To scan the preset channels:
Push and hold the “SCAN” button until you hear a beep. “SCAN” appears on the display. The radio will tune in the next preset channel up the band, stay there for 5 seconds, and then move to the next preset channel. To stop scanning, push this button again.

To scan the currently selected channel category:
Quickly push and release the “SCAN” button. “SCAN” appears on the display. The radio will find the next channel in the same channel category up the band, stay there for 5 seconds, and then scan again. To stop scanning, push this button again.

*: Use of satellite radio requires XM® tuner and service. Contact your Toyota dealer for details.

Compact disc player

There are two scan features—you can either scan the tracks on a specific disc or scan the first tracks of all the discs in the magazine.

Scanning the tracks on a disc:
Quickly push and release the “SCAN” button. “SCAN” will appear on the display and the player will scan all the tracks on the disc you are listening to. To stop scanning, push this button again. If the player scanned all the tracks on the disc, it will stop scanning.

Scanning the first tracks of all the discs in the magazine:
Push the “SCAN” button until you hear a beep. “ SCAN” will appear on the display and the player will scan the first track of the next disc. To stop scanning, push this button again. If the player has scanned all the discs, it will stop scanning.

MP3/WMA player

There are two scan features—you can either scan the files in a folder on a specific disc or scan the first file of all the folder.

Scanning the files on a folder:
Quickly push and release “SCAN”. “SCAN” will appear on the display and the player will scan all the files in the folder you are listening to. To select a file, push the “SCAN” again. After all the files on the folder have been scanned in one pass, normal play resumes.

Scanning the first file of all the folders:
Push “SCAN” until you hear a beep. “SCAN” will appear on the display and the player will scan the first file of the next folder. To select a folder, push the “SCAN” again. After all the folders have been scanned in one pass, normal play resumes.

SEEK/TRACK (Seeking/Track up/down)

Radio

In the seek mode, the radio finds and plays the next station up or down the station band.

To seek the next station, quickly push and release “∧” or “∨” side of the “SEEK/TRACK” button. Do this again to find the station after that.

XM® Satellite Radio*—

To select the next channel within the current channel category, push the “∧” or “∨” side of the “SEEK/TRACK” button. Repeat until a desired channel is found.

*: Use of satellite radio requires XM® tuner and service. Contact your Toyota dealer for details.

Compact disc player

Use this button to skip up or down to a different track.

Push “∧” or “∨” side of the “SEEK/TRACK” button until the number of the track you want to listen to appears on the display. If you want to return to the beginning of the current track, quickly push the down side of the button one time.

MP3/WMA player

Use this button to file up or down to a different file.

Push “∧” or “∨” side of the “SEEK/TRACK” several times until the file you want to listen to appears on the display. If you want to return to the beginning of the current file, push the “∨” side of the button one time.

ST (Stereo reception) display

Your radio automatically changes to stereo reception when a stereo broadcast is received. “ST” appears on the display. If the signal becomes weak, the radio reduces the amount of channel separation to prevent the weak signal from creating noise. If the signal becomes extremely weak, the radio switches from stereo to mono reception.

TEXT

XM® Satellite Radio*1—

When you push the “TEXT” button, the display changes as follows:
CH NAME → TITLE (SONG/PROGRAM TITLE) → NAME (ARTIST NAME/FEATURE) → CH NUMBER → CH NAME

Up to 10 alphanumeric characters can be displayed. (Some information will not be fully displayed.)

The message display will be canceled if any button that affects the display is pushed.

If there is no song/program title or artist name/feature associated with the channel at that time, “– – – – –” will appear on the display.

This XM® tuner supports “Audio Services” (Music and Talk) of only XM® Satellite Radio and “Text Information”*2 linked to the respective audio services.

*1: Use of satellite radio requires XM® tuner and service. Contact your Toyota dealer for details.

*2: Text Information includes, Channel Name, (Artist) Name, (Song) Title and Category Name.

Compact disc player

This button is used to change the display for the compact disc that contains text data.

To change the display, quickly push and release the “TEXT” button while the compact disc is playing. The display changes in the order from the elapsed time to disc title to track title, then back to the elapsed time.

If this button is pushed while a compact disc that does not contain text data is playing, “NO TITLE” will appear on the display.

If the entire disc or track title does not appear on the display, push and hold the button until you hear a beep. The rest of the title will appear.

MP3/WMA player

This button is used to change the display for the MP3/WMA file that contains text data.

To change the display, quickly push and release the “TEXT” button while the MP3/WMA file is playing. The display changes in the order from the elapsed time to folder name to file name to album title to track title to artist name, then back to the elapsed time.

If this button is pushed while an MP3/WMA file that does not contain text data is playing, “NO TITLE” will appear on the display.

If the entire text data is not displayed, push and hold it until you hear a beep. The rest of the text data will appear.

TUNE·FILE (Tuning and File up/down)

Radio

Turn the “TUNE·FILE” knob clockwise to step up the frequency. Turn the knob counterclockwise to step down the frequency.

XM® Satellite Radio*—

Turn the “TUNE·FILE” knob clockwise to step up the channel. Turn the knob counterclockwise to step down the channel.

*: Use of satellite radio requires XM® tuner and service. Contact your Toyota dealer for details.

MP3/WMA player

Turn the “TUNE·FILE” knob clockwise to file up. Turn the knob counterclockwise to file down.

Audio remote controls (steering switches)

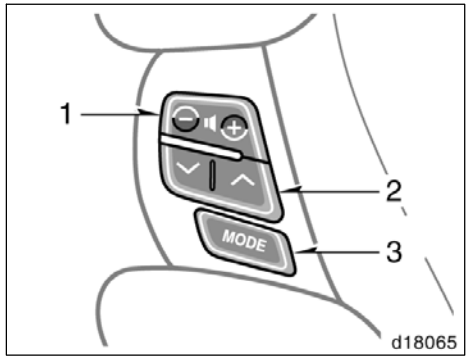

Some parts of the audio system can be adjusted using the switches on the steering wheel.

Details of the specific switches, controls, and features are described below.

1. Volume control switch
2. “∧ ∨” switch
3. “MODE” switch

1. Volume control switch

Push “+” side to increase the volume. The volume continues to increase while the switch is being pushed.

Push “–” side to decrease the volume. The volume continues to decrease while the switch is being pushed.

2. “∧ ∨” switch

Radio

This switch has the following features—

To select a preset station:
Quickly push and release the “∧” or “∨” side of the switch. Do this again to select the next preset station.

To seek a station:
Push and hold the “∧” or “∨” side of the switch until you hear a beep. Do this again to find the next station. If you push the switch on either side during the seek mode, seeking will be cancelled.

To step up or down the frequency, push and hold the switch even after you hear a beep. When you release the switch, the radio will begin seeking up or down for a station. Do this again to find the next station.

XM® Satellite Radio*—

To select a preset channel, push the “∧” or “∨” side of the switch. Repeat until a desired channel is found.

*: Use of satellite radio requires XM® tuner and service. Contact your Toyota dealer for details.

Compact disc player

Use this switch to skip up or down to a different track in either direction.

Quickly push and release the “∧” or “∨” side of the switch until the track you want to listen to is set. If you want to return to the beginning of the current track, push the “∨” side of the switch once, quickly.

Push and hold the “∧” or “∨” side of the switch until the disc you want to listen to is set.

MP3/WMA player

Use this switch to select a desired file or disc.

To select a desired file:
Quickly push and release the “∧” or “∨” side of the switch until the file you want to listen to is set. If you want to return to the beginning of the current file, push the “∨” side of the switch once, quickly.

To select a desired disc:
Push and hold the “∧” or “∨” side of the switch until the disc you want to listen to is set.

3. “MODE” switch

Push the “MODE” switch to select an audio mode. Each push changes the mode sequentially if the desired mode is ready to use.

To turn the audio system on, push the “MODE” switch.

To turn the audio system off, push and hold the “MODE” switch until the system turns off.

AUX adapter

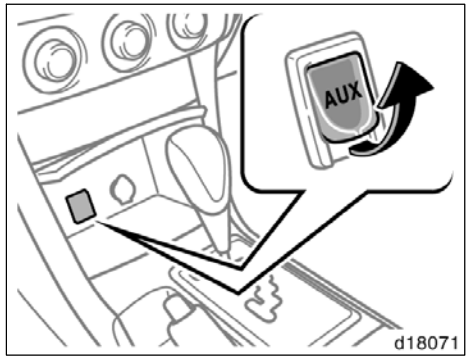

An AUX adapter is installed in the center console auxiliary box.

By inserting a mini plug into the AUX adapter, you can listen to music from a portable audio device through the vehicle’s speaker system.

To use the AUX adapter, switch to the AUX mode (external device mode) by pressing the “DISC AUX” button. When the AUX adapter is in use, “AUX” will appear on the display. To adjust the volume, turn the “PWR·VOL” knob.

When using a portable audio device connected to the power outlet, noise may occur during playback. If this happens, use the power source of the portable audio device.

If you install an audio system other than a genuine audio system, you will not be able to use the AUX adapter.

Audio system operating hints

NOTICE

To ensure correct audio system operations:

- ***Be careful not to spill beverages over the audio system.***
- ***Do not put anything other than a Compact Disc into the slot.***
- ***The use of a cellular phone inside or near the vehicle may cause a noise from the speakers of the audio system which you are listening to. However, this does not indicate a malfunction.***

RADIO RECEPTION

Usually, a problem with radio reception does not mean there is a problem with your radio—it is just the normal result of conditions outside the vehicle.

For example, nearby buildings and terrain can interfere with FM reception. Power lines or telephone wires can interfere with AM signals. And of course, radio signals have a limited range. The farther you are from a station, the weaker its signal will be. In addition, reception conditions change constantly as your vehicle moves.

Here are some common reception problems that probably do not indicate a problem with your radio:

FM

Fading and drifting stations—Generally, the effective range of FM is about 40 km (25 miles). Once outside this range, you may notice fading and drifting, which increase with the distance from the radio transmitter. They are often accompanied by distortion.

Multi–path—FM signals are reflective, making it possible for two signals to reach your antenna at the same time. If this happens, the signals will cancel each other out, causing a momentary flutter or loss of reception.

Static and fluttering—These occur when signals are blocked by buildings, trees, or other large objects. Increasing the bass level may reduce static and fluttering.

Station swapping—If the FM signal you are listening to is interrupted or weakened, and there is another strong station nearby on the FM band, your radio may tune in the second station until the original signal can be picked up again.

AM

Fading—AM broadcasts are reflected by the upper atmosphere—especially at night. These reflected signals can interfere with those received directly from the radio station, causing the radio station to sound alternately strong and weak.

Station interference—When a reflected signal and a signal received directly from a radio station are very nearly the same frequency, they can interfere with each other, making it difficult to hear the broadcast.

Static—AM is easily affected by external sources of electrical noise, such as high tension power lines, lightening, or electrical motors. This results in static.

XM®*

Alternation or modifications carried out without appropriate authorization may invalidate the user’s right to operate the equipment.

*: Use of satellite radio requires XM® tuner and service. Contact your Toyota dealer for details.

NOTICE

This equipment has been tested and found to comply with the limits for a class B digital device, pursuant to Part 15 of the FCC Rules. These limits are designed to provide reasonable protection against harmful interference in a residential installation. This equipment generates, uses and can radiate radio frequency energy and, if not installed and used in accordance with the instructions, may cause harmful interference to radio communications. However, there is no guarantee that interference will not occur in a particular installation.

If this equipment does cause harmful interference to radio or television reception, which can be determined by turning the equipment off and on, the user is encouraged to try to correct the interference by one or more of the following measures:

—Reorient or relocate the receiving antenna.

—Increase the separation between the equipment and receiver.

—Connect the equipment into an outlet on a circuit different from that to which the receiver is connected.

—Consult the dealer or an experienced radio/TV technician for help.

CARING FOR YOUR COMPACT DISC PLAYER AND DISCS

- Your compact disc player is intended for use with 12 cm (4.7 in.) discs only.
- Extremely high temperatures can keep your compact disc player from working. On hot days, use the air conditioning to cool the vehicle interior before you listen to a disc.
- Bumpy roads or other vibrations may make your compact disc player skip.
- If moisture gets into your compact disc player, you may not hear any sound even though your compact disc player appears to be working. Remove the disc from the player and wait until it dries.

⚠ CAUTION

Compact disc players use an invisible laser beam which could cause hazardous radiation exposure if directed outside the unit. Be sure to operate the player correctly.

- Use only compact discs marked as shown above. The following products may not be playable on your compact disc player.

  Copy–protected CD
  CD–R (CD–Recordable)
  CD–RW (CD–Re–writable)
  CD–ROM

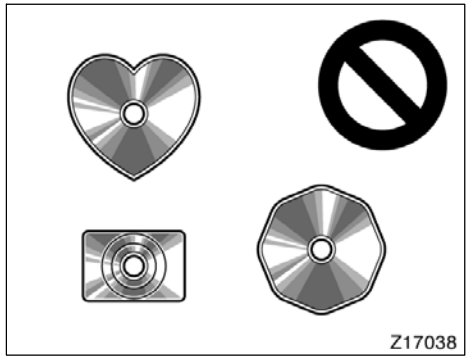

Special shaped discs

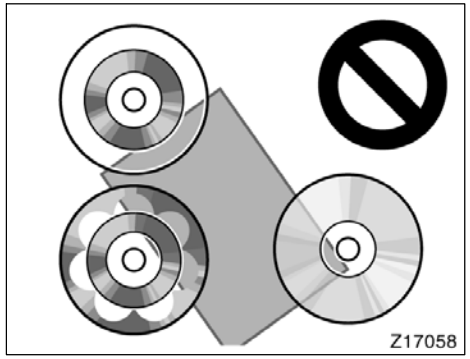

Transparent/translucent discs

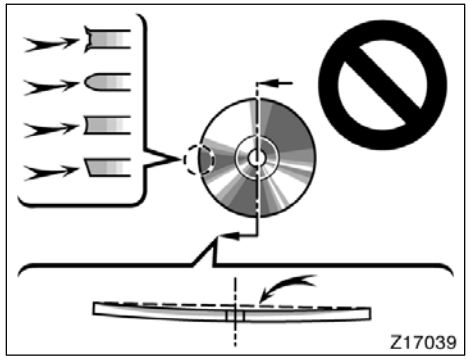

Low quality discs

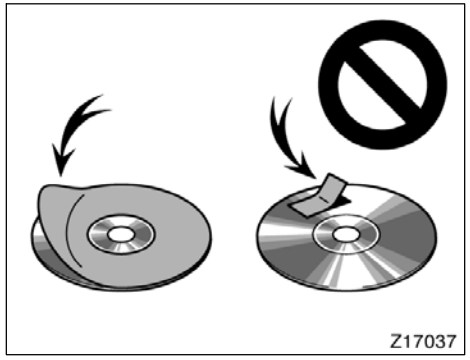

Labeled discs

NOTICE

- ***Do not use special shaped, transparent/translucent, low quality or labeled discs such as those shown in the illustrations. The use of such discs may damage the player or changer, or it may be impossible to eject the disc.***
- ***This system is not designed for use of Dual Disc. Do not use Dual Disc because it may cause damage to the player or changer.***

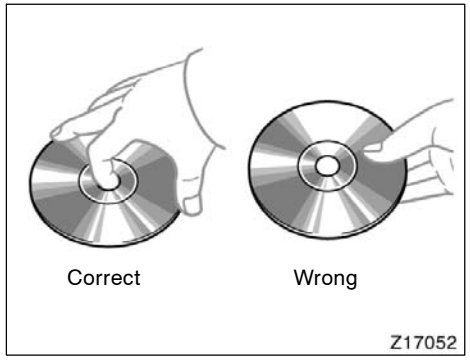

- Handle compact discs carefully, especially when you are inserting them. Hold them on the edge and do not bend them. Avoid getting fingerprints on them, particularly on the shiny side.
- Dirt, scratches, warping, pin holes, or other disc damage could cause the player to skip or to repeat a section of a track. (To see a pin hole, hold the disc up to the light.)
- Remove discs from the compact disc player when you are not listening to them. Store them in their plastic cases away from moisture, heat, and direct sunlight.

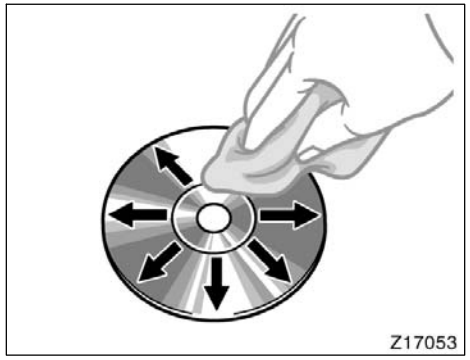

To clean a compact disc: Wipe it with a soft, lint–free cloth that has been dampened with water. Wipe in a straight line from the center to the edge of the disc (not in circles). Dry it with another soft, lint–free cloth. Do not use a conventional record cleaner or anti–static device.

MP3/WMA FILES

- MP3 (MPEG Audio Layer 3) and WMA (Windows Media Audio) are audio compression standards.
- The MP3/WMA player can play MP3 and WMA files on CD–ROM, CD–R and CD–RW discs.

  The unit can play disc recordings compatible with ISO 9660 level 1 and level 2 and with the Romeo and Joliet file system.
- When naming an MP3 or WMA file, add the appropriate file extension (.mp3 or .wma).
- The MP3/WMA player plays back files with .mp3 or .wma file extensions as MP3 or WMA files. To prevent noise and playback errors, use the appropriate file extensions.
- Multi–session compatible CDs can also be played.
- MP3 files are compatible with the ID3 Tag Ver. 1.0, Ver. 1.1, Ver. 2.2, and Ver. 2.3 formats. The unit cannot display disc title, track title and artist name in other formats.
- WMA files can contain a WMA tag that is used in the same way as an ID3 tag. WMA tags carry information such as track title, artist name.
- The emphasis function is available only when playing MP3/WMA files recorded at 32, 44.1 and 48 kHz. (The system can play MP3 files with sampling frequencies of 16, 22.05, and 24 kHz. However, the emphasis function is not available for files recorded at these frequencies.)
- The sound quality of MP3/WMA files generally improves with higher bit rates. In order to achieve a reasonable level of sound quality, discs recorded with a bit rate of at least 128 kbps are recommended.

  Playable bit rates
  MP3 files:
  MPEG1 LAYER3—64 to 320 kbps
  MPEG2 LSF LAYER3—64 to 160 kbps
  WMA files:
  Ver. 7, 8 CBR—48 to 192 kbps
  Ver. 9 CBR—48 to 320 kbps

- The MP3/WMA player does not play back MP3/WMA files from discs recorder using packet write data transfer (UDF format). Discs should be recorded using “pre–mastering” software rather than packet–write software.
- M3u playlists are not compatible with the audio player.
- MP3i (MP3 interactive) and MP3PRO formats are not compatible with the audio player.
- The MP3 player is compatible with VBR (Variable Bit Rate).
- When playing back files recorded as VBR (Variable Bit Rate) files, the play time will not be correctly displayed if fast forward or reverse operations are used.
- It is not possible to check folders that do not include MP3/WMA files.
- MP3/WMA files in folders up to 8 levels deep can be played. However, the start of playback may be delayed when using discs containing numerous levels of folders. For this reason, we recommend creating discs with no more than two levels of folders.
- It is possible to play up to 192 folders or 255 files on one disc.

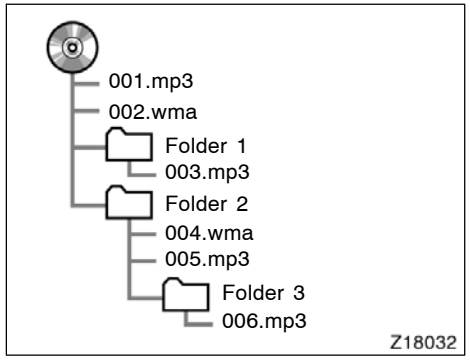

- The play order of the compact disc with the structure shown on the left is as follows:

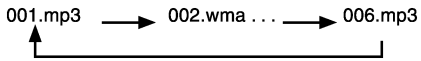

CD–R and CD–RW discs

- CD–R/CD–RW discs that have not been subject to the “finalizing process” (a process that allows discs to be played on a conventional CD player) cannot be played.
- It may not be possible to play CD–R/CD–RW discs recorded on a music CD recorder or a personal computer because of disc characteristics, scratches or dirt on the disc, or dirt, condensation, etc. on the lens of the unit.
- It may not be possible to play discs recorded on a personal computer depending on the application settings and the environment. Record with the correct format. (For details, contact the appropriate application manufacturers of the applications.)
- CD–R/CD–RW discs may be damaged by direct exposure to sunlight, high temperatures or other storage conditions. The unit may be unable to play some damaged discs.

- If you insert a CD–RW disc into the MP3/WMA player, playback will begin more slowly than with a conventional CD or CD–R disc.
- Recordings on CD–R/CD–RW cannot be played using the DDCD (Double Density CD) system.

TERMS

Packet write—

This is a general term that describes the process of writing data on–demand to CD–R, etc., in the same way that data is written to floppy or hard discs.

ID3 Tag—

This is a method of embedding track–related information in an MP3 file. This embedded information can include the track title, the artist’s name, the album title, the music genre, the year of production, comments and other data. The contents can be freely edited using software with ID3 tag editing functions. Although the tags are restricted to the number of characters, the information can be viewed when the track is played back.

WMA Tag—

WMA files can contain a WMA tag that is used in the same way as an ID3 tag. WMA tags carry information such as track title, artist name.

ISO 9660 format—

This is the international standard for the formatting of CD–ROM folders and files. For the ISO 9660 format, there are two levels of regulations.

Level 1:

The file name is in 8.3 format (8 character file names, with a 3 character file extension. File names must be composed of one–byte capital letters and numbers. The “_” symbol may also be included.)

Level 2:

The file name can have up to 31 characters (including the separation mark “.” and file extension). Each folder must contain fewer than 8 hierarchies.

m3u—

Playlists created using “WINAMP” software have a playlist file extension (.m3u).

MP3—

MP3 is an audio compression standard determined by a working group (MPEG) of the ISO (International Standard Organization). MP3 compresses audio data to about 1/10 the size of that on conventional discs.

WMA—

WMA (Windows Media Audio) is an audio compression format developed by Microsoft. It compresses files into a size smaller than that of MP3 files. The decoding formats for WMA files are Ver. 7, 8, and 9.

Hands–free phone system——Reference

Phone Setup (see page 195)

- **Pair phone**

  To use the hands–free system, you need to register your phone in the system.
- **Change name**

  The registered phone names can be changed.
- **Delete**

  The registered phones can be deleted.
- **List phones**

  The registered phone names can be checked.
- **Select phone**

  The registered phones can be selected.
- **Set passkey**

  The passkey can be changed.

Security (see page 200)

- **Set PIN**

  The PIN can be set or changed.
- **Phone book lock**

  The phone book can be locked.
- **Phone book unlock**

  The locked phone book can be unlocked.

System Setup (see page 204)

- **Adjust Guidance Volume**

  Guidance volume can be adjusted.
- **Initialize**

Phone Book (see page 204)

- **Add Entry**

  Phone numbers and voice tags can be registered.
- **Change Name**

  The registered names can be changed.
- **Delete Entry**

  The registered names can be deleted.

- **Delete Speed Dial**

  The registered speed dial can be deleted.
- **List names**

  The registered names can be checked.
- **Set Speed Dial**

  Speed dials can be set

Redial (see page 212)

Callback (see page 213)

Making a phone call (see page 215)

Receiving a phone call (see page 217)

Talking on the phone (see page 218)

—Some basics

This system supports Bluetooth®, a wireless system that allows you to make or receive calls without taking your hands from the steering wheel and without using cables to connect the phone and system.

The phone must be paired to the system before using the hands–free feature. If your cellular phone does not support Bluetooth®, this system will not function.

⚠ CAUTION

While you are driving, do not use a cellular phone or connect the Bluetooth® phone.

NOTICE

Do not leave your cellular phone in the car. The temperature indoor may be high and damage the phone.

The system may not function in the following conditions and places:

- The cellular phone is turned off.
- The current position is outside the communication area.
- The cellular phone is not connected.
- The cellular phone has a low battery.
- The cellular phone is located behind the seat or in the glove box and console box.
- The cellular phone touches or is covered with metal materials.

This system supports the following service.

- HFP (Hands Free Profile) Ver.1.0
- DNP (Dial–up Networking Profile) Ver.1.1
- OPP (Object Push Profile) Ver.1.1

If your cellular phone does not support HFP, you cannot enter the Bluetooth® phone, and take OPP service individually.

BLUETOOTH is a trademark owned by Bluetooth SIG. Inc.

When transferring ownership of the vehicle:

A lot of personal data is registered when you use the hands–free system. When transferring ownership of the vehicle, initialize the system.

If you initialize it, the former state will never come back again. Pay much attention when initializing the data.

You can initialize the following data in the system.

- Phone book data
- Dialed numbers and received calls
- Speed dial
- Bluetooth® phone data
- Security code

FCC ID: HYQBTAU01A
IC ID: 1551A–BTAU01A
MADE IN JAPAN

This device complies with Part 15 of the FCC Rules and RSS–210. Operation is subject to the following two conditions: (1) This device may not cause harmful interference, and (2) This device must accept any interference received, including interference that may cause undesired operation.

CAUTION

Changes or modifications not expressly approved by the party responsible for compliance could void the user’s authority to operate the equipment.

NOTE: This equipment has been tested and found to comply with the limits for a Class B digital device, pursuant to part 15 of the FCC Rules. These limits are designed to provide reasonable protection against harmful interference in a residential installation. This equipment generates, uses and can radiate radio frequency energy and, if not installed and used in accordance with the instructions, may cause harmful interference to radio communications. However, there is no guarantee that interference will not occur in a particular installation. If this equipment does cause harmful interference to radio or television reception, which can be determined by turning the equipment off and on, the user is encouraged to try to correct the interference by one or more of the following measures:
–Reorient or relocate the receiving antenna.
–Increase the separation between the equipment and receiver.
–Connect the equipment into an outlet on a circuit different from that to which the receiver is connected.
–Consult the dealer or an experienced radio/TV technician for help.

CAUTION: Radio Frequency Radiation Exposure
This equipment complies with FCC radiation exposure limits set forth for uncontrolled equipment and meets the FCC radio frequency (RF) Exposure Guidelines in Supplement C to OET65. This equipment has very low levels of RF energy that it deemed to comply without maximum permissive exposure evaluation (MPE). But it is desirable that it should be installed and operated with at least 20 cm and more between the radiator and person’s body (excluding extremities: hands, wrists, feet and legs).

Co–location: This transmitter must not be co–located or operated in conjunction with any other antenna or transmitter.

—Control and features

▶Steering switches and microphone

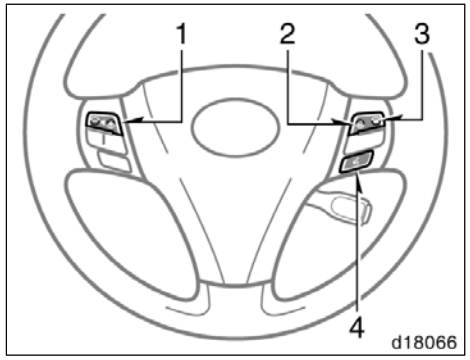

Steering switches

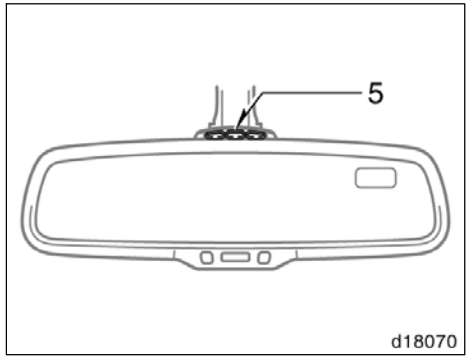

Microphone

1. Volume control switch

To increase the volume: Push “+”.
To decrease the volume: Push “–”.

When driving at 80 km/h (50 mph) or more, the volume automatically increases without switch adjustment. When your speed falls below 70 km/h (43 mph), the volume automatically returns to its original level.

Voice guidance volume cannot be changed by pushing the volume control switch on the steering wheel.

2. On–hook switch

When the hands–free system is on, pushing the on–hook switch turns the hands–free system off.

Pushing and holding the talk switch ends the speech command system.

3. Off–hook switch

Pushing the off–hook switch turns the hands–free system on.

When receiving a call, pushing the off–hook switch allows you to talk on the phone.

4. Talk switch

Pushing the talk switch turns the hands–free system on and initiates the speech command system.

5. Microphone

The microphone is used when talking on the phone or using the speech command system.

▶**Audio unit**

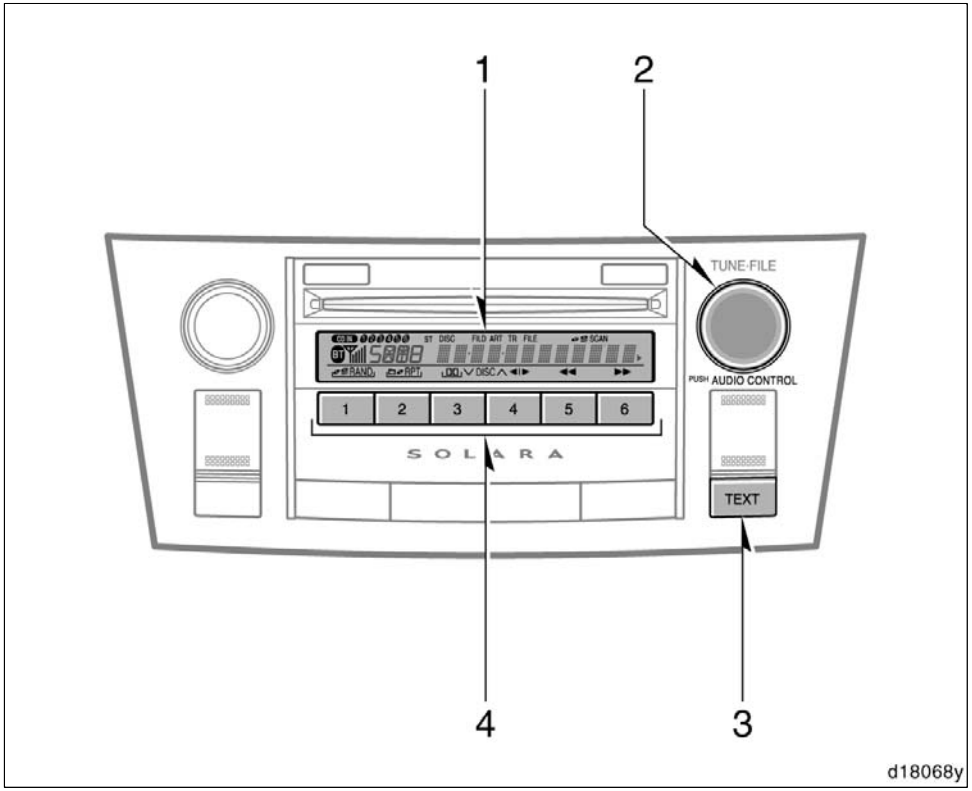

1. Display

Displays such items as the reception level, a party’s name and phone number. See “DISPLAY” described on the following page for further details about the display.

2. “AUDIO CONTROL” knob

Turning the “AUDIO CONTROL” knob displays the menu items, names, numbers, etc. to be selected. To select an item, push the “AUDIO CONTROL” knob. Due to safety concerns, the “AUDIO CONTROL” knob does not function while the vehicle is in motion.

3. “TEXT” button

When the party’s name or phone number is too long to be displayed, pushing and holding the “TEXT” button displays the remaining characters.

4. Preset buttons

Pushing the preset button displays the registered speed dial numbers.

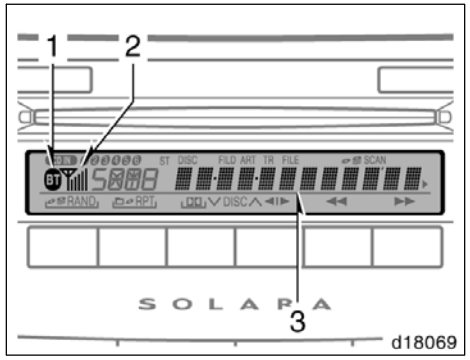

DISPLAY

1. Bluetooth® display

Displays when a Bluetooth® connection is made. If there is no display, the Bluetooth® connection has not been made and communication between the phone and system is not possible. When using the hands–free system, make sure that [BT] is displayed. The display is updated in real time.

2. Reception level display

Displays the reception level of the Bluetooth® signals. This may not match the display on the cellular phone. The reception level of some cellular phones may not be displayed.

The number of bars is greater when the signal received is stronger.

3. Message display

Displays phone numbers, names, comments, menu items, etc.

—Phone Setup

The phone setup menu includes the following:

- Pair Phone

To use the hands–free system, you need to register your phone in the system. Once you have registered it, you can make a hands–free call. Up to 6 phones can be registered.

- Select Phone

When the system connects to Bluetooth®, the phone previously used is automatically selected. Select a different phone if necessary. Only the selected phone can be used with the hands–free system.

- Change Name

The registered phone names can be changed.

- List Phones

The registered phone names can be checked.

The following can be performed during the name playback:

- **Select phone**
- **Change name**
- **Delete**

- Set PassKey

The passkey can be changed. A 4 to 8 digit code can be input as a passkey.

- Delete

The registered phones can be deleted.

To enter the phone setup menu

1. Push the off–hook switch to turn the hands–free system on.
2. Follow voice guidance instructions, or turn the “AUDIO CONTROL” knob until [Setup] is displayed and push the knob.

[Setup. Please push the talk switch and say security, or phone setup.] is heard.

3. Follow voice guidance instructions, or turn the “AUDIO CONTROL” knob until [Phone Setup] is displayed and push the knob.

[Phone setup. Push the talk switch and say pair phone, select phone, change name, list phones, set passkey or delete.] is heard.

[XXX (phone name) already selected.] is heard and the phone name is displayed.

If no phone has been registered, the system may not function properly.

To pair phones

1. Push the talk switch and say [Pair phone], or turn the “AUDIO CONTROL” knob until [Pair Phone] is displayed and push the knob.

[Pair. Push the talk switch and say a name for the phone.] is heard.

2. Follow voice guidance instructions, or turn the “AUDIO CONTROL” knob until [Record Name] is displayed, push the knob and say the desired phone name.

[Push the talk switch and say confirm. Otherwise, say go back.] is heard.

3. Follow voice guidance instructions, or turn the “AUDIO CONTROL” knob until [Confirm] is displayed and push the knob.

[XXX (desired phone name) Ready for phone pairing. Please use the phone to connect it to the hands–free system. The passkey for the phone is....] is heard.

After “HANDS FREE” is displayed, a passkey* is displayed and [Searching.] is heard.

4. Input the displayed passkey into the phone.

[The phone is paired and ready for use. Returning to the main menu.] is heard and [Paired] is displayed.

The system may not function in the following cases:

- If 6 phones have already been registered.
- If the vehicle is moving.
- If the system cannot communicate with the phone.

*: Passkey is a password required to register a phone to the system.

INFORMATION

- ***To use the hands–free system, you need to register your phone in the system. Once you have registered it, you can make a hands–free call. Up to 6 phones can be registered.***
- ***For the operation of the phone, see the manual that comes with your cellular phone.***
- ***The passkey can be changed. See page 199 for changing the passkey.***

To select a phone

1. Push the talk switch and say [Select phone], or turn the “AUDIO CONTROL” knob until [Select Phone] is displayed and push the knob.

[Select phone. Push the talk switch and say the phone name or say list phones.] is heard.

2. Follow voice guidance instructions, or turn the “AUDIO CONTROL” knob until the desired phone name is displayed and push the knob.

When the phone is selected by a voice command:

[XXX (phone name) Push the talk switch and say confirm. Otherwise, say go back.] is heard and the phone name is displayed.

Follow voice guidance instructions, or turn the “AUDIO CONTROL” knob until [Confirm] is displayed and push the knob.

[XXX selected. Returning to the phone setup.] is heard.

When the phone is selected by using the knob:

[XXX selected. Returning to the phone setup.] is heard.

The system may not function in the following cases:

- If the phone is not found.
- If the system does not recognize the voice command.

To change a name

1. Push the talk switch and say [Change name], or turn the “AUDIO CONTROL” knob until [Change Name] is displayed and push the knob.

[Change name. Push the talk switch and say the phone name to change.] is heard.

2. Follow voice guidance instructions, or turn the “AUDIO CONTROL” knob until the phone name that you want to change is displayed and push the knob.

When the phone is selected by a voice command:

[XXX (phone name) Push the talk switch and say confirm. Otherwise, say go back.] is heard and the phone name is displayed.

1. Follow voice guidance instructions, or turn the “AUDIO CONTROL” knob until [Confirm] is displayed and push the knob.

[Push the talk switch and say a new name.] is heard.

2. Follow voice guidance instructions, or turn the “AUDIO CONTROL” knob until [Record Name] is displayed, push the knob and say the desired phone name.

[XXX Push the talk switch and say confirm. Otherwise, say go back.] is heard.

3. Follow voice guidance instructions, or turn the “AUDIO CONTROL” knob until [Confirm] is displayed and push the knob.

[Name changed. Returning to the phone setup.] is heard and [Changed] is displayed.

When the phone is selected by using the knob:

[XXX Push the talk switch and say confirm. Otherwise, say go back.] is heard and the phone name is displayed.

1. Follow voice guidance instructions, or turn the “AUDIO CONTROL” knob until [Confirm] is displayed and push the knob.

[Push the talk switch and say a new name.] is heard.

2. Follow voice guidance instructions, or turn the “AUDIO CONTROL” knob until [Record Name] is displayed, push the knob and say the desired phone name.

[XXX Push the talk switch and say confirm. Otherwise, say go back.] is heard.

3. Follow voice guidance instructions, or turn the “AUDIO CONTROL” knob until [Confirm] is displayed and push the knob.

[Name changed. Returning to the phone setup.] is heard and [Changed] is displayed.

The system may not function in the following cases:

- If no phone has been registered.
- If the system does not recognize the voice command.

To list phones

1. Push the talk switch and say [List phones], or turn the “AUDIO CONTROL” knob until [List Phones] is displayed and push the knob.

[List phones. To select a name, push the talk switch during the name playback.] is heard.

2. Follow voice guidance instructions.

[Push the talk switch and say select phone, change name, or delete.] is heard.

Select one of the following:

Select phone

Push the talk switch and say [Select phone], or turn the “AUDIO CONTROL” knob until [Select Phone] is displayed and push the knob.

For further details on selecting a phone, see page 197.

Change name

Push the talk switch and say [Change name], or turn the “AUDIO CONTROL” knob until [Change Name] is displayed and push the knob.

For further details on changing a name, see page 197.

Delete

Push the talk switch and say [Delete], or turn the “AUDIO CONTROL” knob until [Delete] is displayed and push the knob.

For further details on deleting a phone, see page 200.

If no phone has been registered, the system may not function properly.

To set a passkey

1. Push the talk switch and say [Set passkey], or turn the “AUDIO CONTROL” knob until [Set Passkey] is displayed and push the knob.

[Set Passkey. The passkey is required for the phone pairing process. Push the talk switch and say a new passkey.] is heard and passkey is displayed.

2. Follow voice guidance instructions, or turn the “AUDIO CONTROL” knob to select a number.

When using a voice command:

[XXXX (new passkey) Push the talk switch and say confirm. Otherwise, continue adding numbers, or say go back or delete.] is heard and the new passkey is displayed.

Follow voice guidance instructions, or turn the “AUDIO CONTROL” knob until [Confirm] is displayed and push the knob.

[Passkey changed. Returning to the phone setup.] is heard.

When using the knob:

1. Turn the “AUDIO CONTROL” knob to select a number. Push the “AUDIO CONTROL” knob to set.
2. When the passkey is set, push the “AUDIO CONTROL” knob.

[Passkey changed. Returning to the phone setup.] is heard.

The system does not function in the following cases:

- If the passkey has less than 4 digits.
- If the passkey has more than 8 digits.

To delete a phone

1. Push the talk switch and say [Delete], or turn the “AUDIO CONTROL” knob until [Delete] is displayed and push the knob.

[Delete. Push the talk switch and say the phone name to delete.] is heard.

2. Follow voice guidance instructions, or turn the “AUDIO CONTROL” knob until the phone name you want to delete is displayed and push the knob.

When using a voice command:

[XXX (desired phone name) Push the talk switch and say confirm. Otherwise, say go back.] is heard and the phone name is displayed.

Follow voice guidance instructions, or turn the “AUDIO CONTROL” knob until [Confirm] is displayed and push the knob.

[Deleted. Returning to the phone setup.] is heard and [Deleted] is displayed.

When using the knob:

[Deleted. Returning to the phone setup.] is heard and [Deleted] is displayed.

The system may not function in the following cases:

- If no phone has been registered.
- If the system does not recognize the voice command.

—Security

The security menu includes the following:

- **Set PIN (Personal Identification Number)**

The PIN can be set or changed.

- **Phone book lock**

The phone book can be locked.

When the phone book is locked, the following functions cannot be used:

- Dial by name
- Redial
- Callback
- Speed Dial
- PhoneBook
- **Phone book unlock**

The locked phone book can be unlocked.

To enter the security menu

1. Push the off–hook switch to turn the hands–free system on.
2. Follow voice guidance instructions, or turn the “AUDIO CONTROL” knob until [Setup] is displayed and push the knob.

[Setup. Please push the talk switch and say security, or phone setup.] is heard.

3. Follow voice guidance instructions, or turn the “AUDIO CONTROL” knob until [Security] is displayed and push the knob.

[Security. Push the talk switch and say set PIN, phone book lock, or phone book unlock.] is heard.

To set a PIN

Push the talk switch and say [Set PIN], or turn the “AUDIO CONTROL” knob until [Set PIN] is displayed and push the knob.

[There is no PIN number set. Please register a PIN number. Please push the talk switch and say a four–digit PIN number.] is heard.

When using a voice command:

1. Push the talk switch and say a new PIN number.
2. Follow voice guidance instructions, or turn the “AUDIO CONTROL” knob until [Confirm] is displayed and push the knob.

[The PIN number has been set. Returning to the security.] is heard and [Completed] is displayed.

When using the knob:

1. Turn the “AUDIO CONTROL” knob to select a number. Push the “AUDIO CONTROL” knob to set.
2. Repeat the above procedure until the entire four–digit number is set.
3. When the PIN is set, push the “AUDIO CONTROL” knob.
4. Follow voice guidance instructions, or turn the “AUDIO CONTROL” knob until [Confirm] is displayed and push the knob.

[The PIN number has been set. Returning to the security.] is heard and [Completed] is displayed.

If the PIN is to be changed:

[There is a PIN number in place. Push the talk switch and say the correct PIN number.] is heard and [Current PIN?] is displayed.

1. Follow voice guidance instructions, or use the “AUDIO CONTROL” knob to input the current PIN number.

[Please push the talk switch and say a four–digit PIN number.] is heard.

2. Push the talk switch and say new PIN number.

[The PIN number has been set. Returning to the security.] is heard and [Completed] is displayed.

If the current number is not correct, the system does not function properly.

To lock the phone book

1. Push the talk switch and say [Phone book lock], or turn the “AUDIO CONTROL” knob until [Phbk Lock] is displayed and push the knob.

[There is a PIN number in place. Push the talk switch and say the correct PIN number.] is heard and [Current PIN?] is displayed.

2. Follow voice guidance instructions, or turn the “AUDIO CONTROL” knob to select a number.

When using a voice command:

[XXXX (PIN number) Push the talk switch and say confirm. Otherwise, say go back.] is heard and PIN number is displayed.

Follow voice guidance instructions, or turn the “AUDIO CONTROL” knob until [Confirm] is displayed and push the knob.

[PIN number accepted. The phone book is now locked. Returning to the main menu.] is heard and [Locked] is displayed.

When using the knob:

1. Turn the “AUDIO CONTROL” knob to select a number. Push the “AUDIO CONTROL” knob to set.
2. When the PIN number is set, push the “AUDIO CONTROL” knob.

[XXXX Push the talk switch and say confirm. Otherwise, say go back.] is heard and PIN number is displayed.

3. Follow voice guidance instructions, or turn the “AUDIO CONTROL” knob until [Confirm] is displayed and push the knob.

[PIN number accepted. The phone book is now locked. Returning to the main menu.] is heard and [Locked] is displayed.

The system may not function in the following cases:

- If the current number is not correct.
- If the phone book has already been locked.
- If the PIN number does not exist.

To unlock the phone book

1. Push the talk switch and say [Phone book unlock], or turn the “AUDIO CONTROL” knob until [Phbk Unlock] is displayed and push the knob.

[Phonebook unlock. There is a PIN number in place. Push the talk switch and say the correct PIN number.] is heard and [Current PIN?] is displayed.

2. Follow voice guidance instructions, or turn the “AUDIO CONTROL” knob to select a number.

When using a voice command:

[XXXX (PIN number) Push the talk switch and say confirm. Otherwise, say go back.] is heard and the PIN number is displayed.

Follow voice guidance instructions, or turn the “AUDIO CONTROL” knob until [Confirm] is displayed and push the knob.

[PIN number accepted. The phone book is now unlocked. Returning to the main menu.] is heard and [Unlocked] is displayed.

When using the knob:

1. Turn the “AUDIO CONTROL” knob to select a number. Push the “AUDIO CONTROL” knob to set.
2. When the PIN number is set, push the “AUDIO CONTROL” knob.

[XXXX Push the talk switch and say confirm. Otherwise, say go back.] is heard and the PIN number is displayed.

3. Follow voice guidance instructions, or turn the “AUDIO CONTROL” knob until [Confirm] is displayed and push the knob.

[PIN number accepted. The phone book is now unlocked. Returning to the main menu.] is heard and [Unlocked] is displayed.

The system may not function in the following cases:

- If the current number is not correct.
- If the phone book has already been unlocked.

INFORMATION

A shortcut to each of the following functions is available. Enter the phone book menu, push the off–hook switch, and say either of the following:

- ***Phone book lock***
- ***Phone book unlock***

—System Setup

The system setup menu includes the following:

- Adjust Guidance Volume
- Initialize

To enter the system setup menu

1. Push the off–hook switch to turn the hands–free system on.
2. Follow voice guidance instructions, or turn the “AUDIO CONTROL” knob until [Setup] is displayed and push the knob.
3. Turn the “AUDIO CONTROL” knob until [System Setup] is displayed and push the knob.

[System setup. Please select guidance volume or initialize.] is heard.

To adjust the guidance volume

1. Turn the “AUDIO CONTROL” knob until [Guidance Vol] is displayed and push the knob.

[Guidance will be at this volume] is heard and the present volume level is displayed.

2. Turn the “AUDIO CONTROL” knob to adjust the volume and push the knob.

To initialize

1. Turn the “AUDIO CONTROL” knob until [Initialize] is displayed and push the knob.

[System initialization. This will erase all user information in the hands free system; including paired phones, phone book entries, and call history. Select confirm to initialize. Otherwise, select go back.] is heard.

2. Turn the “AUDIO CONTROL” knob until [Confirm] is displayed and push the knob.

[System initialization. This will erase all user information in the hands free system; including paired phones, phone book entries, and call history. Select confirm to initialize. Otherwise, select go back.] is heard.

3. Turn the “AUDIO CONTROL” knob until [Confirm] is displayed and push the knob.

[Initialized. Returning to the main menu.] is heard.

—Phone Book

The phone book menu includes the following:

- Add Entry

Phone numbers and voice tags can be registered.

- Change Name

The registered names can be changed.

- Delete Entry

The registered names can be deleted.

- Delete Speed Dial

The registered speed dial can be deleted.

- List Names

The registered names can be checked.

- Set Speed Dial

Speed dials can be set.

Up to 20 numbers can be registered in the phone book.

To enter the phone book menu

1. Push the off–hook switch to turn the hands–free system on.
2. Follow voice guidance instructions, or turn the “AUDIO CONTROL” knob until [Phonebook] is displayed and push the knob.

[Phone book. Please push the talk switch and say add entry, change name, delete entry, list names, set speed dial or delete speed dial.] is heard.

If the phone book is locked, the system may not function properly.

To add entry

The add entry includes the following:

(a) By Voice

(b) By Phone

(c) Call History

(d) Manual Input

Push the talk switch and say [Add entry], or turn the “AUDIO CONTROL” knob until [Add Entry] is displayed and push the knob.

[Add Entry. How will the number be entered. Push the talk switch and say by voice, by phone, or call history.] is heard.

(a) By voice

1. Push the talk switch and say [By voice], or turn the “AUDIO CONTROL” knob until [By Voice] is displayed and push the knob.

[Voice entry. Push the talk switch and say the number.] is heard.

2. Push the talk switch and say the dial number that you want to register.

[To store, push the talk switch and say confirm. Otherwise, continue adding numbers, or say go back, or delete.] is heard and number is displayed.

3. Follow voice guidance instructions.

If [Confirm] is said, then input a voice tag.

[Push the talk switch and say a name.] is heard.

1. Push the talk switch and say the name of the dial number that you want to register.

[XXXX (phone number) Push the talk switch and say confirm. Otherwise, say go back.] is heard.

2. Follow voice guidance instructions, or turn the “AUDIO CONTROL” knob until [Confirm] is displayed and push the knob.

[Stored. To register this as a speed dial entry, push the talk switch and say set speed dial. Otherwise, say confirm.] is heard and [Stored] is displayed.

3. Select one of the following:

- **Confirm**
- **Speed Dial**

Confirm

Push the talk switch and say [Confirm], or turn the “AUDIO CONTROL” knob until [Confirm] is displayed and push the knob.

[Returning to the phone book.] is heard.

Speed Dial

1. Push the talk switch and say [Set speed dial], or turn the “AUDIO CONTROL” knob until [Speed Dial] is displayed and push the knob.

[Set speed dial. Push the preset button to assign to XXXX] is heard.

2. Push and hold the desired preset button.

[preset... is now assigned. Returning to the phone book.] is heard.

The system may not function in the following cases:

- If the phone book is full.
- If the dial number has more than 24 digits.

(b) By Phone

1. Push the talk switch and say [By phone], or turn the “AUDIO CONTROL” knob until [By Phone] is displayed and push the knob.

[Phone entry. Prepare to send the information from the phone. When ready, push the talk switch and say confirm.] is heard.

2. Follow voice guidance instructions, or turn the “AUDIO CONTROL” knob until [Confirm] is displayed and push the knob.

[Send the information at this time.] is heard.

After the system has received the name and phone number, [Push the talk switch and say confirm. To select an alternate number, say next or previous. Otherwise, say go back.] is heard and the name and phone number are displayed.

3. Follow voice guidance instructions, push the talk switch and say [Confirm], or turn the “AUDIO CONTROL” knob until the dial number that you want to register is displayed and push the knob.

Next, input a voice tag.

For further details, see page 205.

(c) Call History

1. Push the talk switch and say [Call history], or turn the “AUDIO CONTROL” knob until [Call History] is displayed and push the knob.

[Call history. Push the talk switch and say incoming or outgoing.] is heard and [Call History] is displayed.

2. Select one of the following:

- **Incoming**
- **Outgoing**

Incoming

1. Push the talk switch and say [Incoming], or turn the “AUDIO CONTROL” knob until [Incoming] is displayed and push the knob.

[Most recent incoming call was XXXX (phone number)] is heard and the incoming number is displayed.

[Push the talk switch and say confirm. Otherwise, say previous, or go back.] is heard.

2. Follow voice guidance instructions, or turn the “AUDIO CONTROL” knob until the dial number that you want to register is displayed and push the knob.

Next, input a voice tag.

For further details, see page 205.

Outgoing

1. Push the talk switch and say [Outgoing], or turn the “AUDIO CONTROL” knob until [Outgoing] is displayed and push the knob.

[Most recent outgoing call was XXXX] is heard and the outgoing number is displayed.

[Push the talk switch and say confirm. Otherwise, say previous, or go back.] is heard.

2. Follow voice guidance instructions, or turn the “AUDIO CONTROL” knob until the dial number that you want to register is displayed and push the knob.

Next, input a voice tag.

For further details, see page 205.

(d) Manual Input

1. Turn the “AUDIO CONTROL” knob until [Manual Input] is displayed and push the knob.
2. Turn the “AUDIO CONTROL” knob to select a number. Push the “AUDIO CONTROL” knob to set.
3. When the number is set, push the “AUDIO CONTROL” knob.

Next, input a voice tag.

For further details, see page 205.

INFORMATION

- ***The system can recognize single digits from zero to nine, #(pound), *(star), and +(plus). Numbers that are ten or greater are not recognized.***
- ***To speed up input, it is a good idea to group all digits into a continuous string. However, you can enter each digit individually or group digits together in preferred string lengths.***

The display corresponding to each operation appears on the screen as follows:

Input operation—

You say: [Nine, nine, five]

Voice output: [995 to store push the talk switch and say confirm. Otherwise, continue adding numbers, or say go back, or delete.]

Display: [995]

You say: [Seven, three, four]

Voice output: [734 to store push the talk switch and say confirm. Otherwise, continue adding numbers, or say go back, or delete.]

Display: [995734]

Repeat the above procedure until the entire number that you want to register is input.

Go back operation—

You say: [Go back]

Voice output: [Go back. The last numbers said have been removed. Push the talk switch and say the number.]

Display: [995]

Repeating the above operation deletes the last digits in reverse order of input.

Delete operation—

You say: [Delete]

Voice output: [Deleted. Push the talk switch and say the number.]

Display: [Delete]

The display will return to the initial screen that allows a number to be input.

To list names

The voice tags can be edited during the name playback.

1. Push the talk switch and say [List names], or turn the “AUDIO CONTROL” knob until [List Names] is displayed and push the knob.

[List names. To select a name, push the talk switch during the name playback.] is heard.

2. Follow voice guidance instructions.

[XXXX selected.] is heard and [Selected] is displayed.

If you push the off–hook switch during the name playback, you can dial the number of the selected name.

Editing the voice tags

The following can be performed:

- **Dial**
- **Change Name**
- **Delete Entry**
- **Speed Dial**

[Push the talk switch and say dial, change name, delete entry, or set speed dial.] is heard and [Selected] is displayed.

Dial

Push the talk switch and say [Dial], or turn the “AUDIO CONTROL” knob until [Dial] is displayed and push the knob.

Change Name

Push the talk switch and say [Change name], or turn the “AUDIO CONTROL” knob until [Change Name] is displayed and push the knob.

For further details, see page 210.

Delete Entry

Push the talk switch and say [Delete entry], or turn the “AUDIO CONTROL” knob until [Delete Entry] is displayed and push the knob.

For further details, see page 209.

Speed dial

Push the talk switch and say [Set speed dial], or turn the “AUDIO CONTROL” knob until [Speed Dial] is displayed and push the knob.

For further details, see page 211.

To delete entry

1. Push the talk switch and say [Delete entry], or turn the “AUDIO CONTROL” knob until [Delete Entry] is displayed and push the knob.

[Delete entry. Push the talk switch and say the name to delete.] is heard.

2. Follow voice guidance instructions, or turn the “AUDIO CONTROL” knob until the name that you want to delete is displayed and push the knob.

When using a voice command:

[XXXX (name) Push the talk switch and say confirm. Otherwise, say go back.] is heard and the name is displayed.

Follow voice guidance instructions, or turn the “AUDIO CONTROL” knob until [Confirm] is displayed and push the knob.

[Deleted. Returning to the phone book.] is heard and [Deleted] is displayed.

When using the knob:

[Deleted. Returning to the phone book.] is heard and [Deleted] is displayed.

The system may not function in the following cases:

- If no name has been registered.
- If the system does not recognize the voice command.

To delete speed dial

1. Push the talk switch and say [Delete speed dial], or turn the “AUDIO CONTROL” knob until [Del Spd Dial] is displayed and push the knob.

[Delete speed dial. Push the preset button to delete from speed dial.] is heard.

2. Select the preset button that you want to delete.

[To delete preset... push the talk switch and say confirm. Otherwise, say go back.] is heard.

3. Follow voice guidance instructions, or turn the “AUDIO CONTROL” knob until [Confirm] is displayed and push the knob.

[Deleted.] is heard and [Deleted] is displayed.

[Returning to the phone book.] is heard.

The system may not function in the following cases:

- If no speed dial has been registered.
- If the preset button has not been assigned.

To change name

1. Push the talk switch and say [Change name], or turn the “AUDIO CONTROL” knob until [Change Name] is displayed and push the knob.

[Change name. Push the talk switch and say the name to change.] is heard.

2. Follow voice guidance instructions, or turn the “AUDIO CONTROL” knob until the dial number that you want to change is displayed and push the knob.

When using a voice command:

[XXXX (phone number) Push the talk switch and say confirm. Otherwise, say go back.] is heard and the phone number is displayed.

1. Follow voice guidance instructions, or turn the “AUDIO CONTROL” knob until [Confirm] is displayed and push the knob.

[Push the talk switch and say a new name.] is heard.

2. Follow voice guidance instructions, or turn the “AUDIO CONTROL” knob until [Record Name] is displayed, push the knob and say new name.

[XXXX Push the talk switch and say confirm. Otherwise, say go back.] is heard.

3. Follow voice guidance instructions, or turn the “AUDIO CONTROL” knob until [Confirm] is displayed and push the knob.

[Name changed. Returning to the phone book.] is heard and [Changed] is displayed.

When using the knob:

[Push the talk switch and say a new name.] is heard.

1. Follow voice guidance instructions, or turn the “AUDIO CONTROL” knob until [Record Name] is displayed, push the knob and say new name.

[XXXX Push the talk switch and say confirm. Otherwise, say go back.] is heard.

2. Follow voice guidance instructions, or turn the “AUDIO CONTROL” knob until [Confirm] is displayed and push the knob.

[Name changed. Returning to the phone book.] is heard and [Changed] is displayed.

The system may not function in the following cases:

- If no name has been registered.
- If the system does not recognize the voice command.

To set speed dial

1. Push the talk switch and say [Set Speed dial], or turn the “AUDIO CONTROL” knob until [Speed Dial] is displayed and push the knob.

[Set speed dial. Push the talk switch and say a name.] is heard.

2. Follow voice guidance instructions, or turn the “AUDIO CONTROL” knob until the dial number that you want to register is displayed and push the knob.

When using a voice command:

[XXXX (phone number) To register this as a speed dial entry, push the talk switch and say confirm. Otherwise, say go back.] is heard and the phone number is displayed.

1. Follow voice guidance instructions, or turn the “AUDIO CONTROL” knob until [Confirm] is displayed and push the knob.

[Push the preset button to assign to XXXX] is heard.

2. Push and hold the desired preset button.

[preset... is now assigned. Returning to the phone book.] is heard.

When using the knob:

[Push the preset button to assign to XXXX] is heard.

Push and hold the desired preset button.

[preset... is now assigned. Returning to the phone book.] is heard.

The system may not function in the following cases:

- If no name has been registered.
- If the system does not recognize the voice command.

INFORMATION
A shortcut to each of the following functions is available. Push the off–hook switch and talk switch, and say one of the following:
• Phone book add entry
• Phone book change name
• Phone book delete entry
• Phone book delete speed dial
• Phone book list names
• Phone book set speed dial

—Redial

The following can be performed:

- Dial
- Delete
- Store

To enter the redial

1. Push the off–hook switch to turn the hands–free system on.
2. Follow voice guidance instructions, or turn the “AUDIO CONTROL” knob until [Redial] is displayed and push the knob.

[Redial. Most recent outgoing call was XXXX (phone number)] is heard and outgoing history is displayed.

[Please push the off–hook switch to dial. Otherwise, push the talk switch and say dial, previous, go back, store, or delete.] is heard.

Dial

Turn the “AUDIO CONTROL” knob until the number that you want to dial is displayed and push the knob. After that, do the one of the following:

- Push the off–hook switch.
- Push the talk switch and say [dial].
- Turn the “AUDIO CONTROL” knob until [Dial] is displayed and push the knob.

Delete

1. Turn the “AUDIO CONTROL” knob until the dial number that you want to delete is displayed and push the knob.
2. Push the talk switch and say [Delete], or turn the “AUDIO CONTROL” knob until [Delete] is displayed and push the knob.

[Delete. Push the talk switch and say confirm. Otherwise, say go back] is heard.

3. Follow voice guidance instructions, or turn the “AUDIO CONTROL” knob until [Confirm] is displayed and push the knob.

[Deleted.] is heard.

Store

1. Turn the “AUDIO CONTROL” knob until the dial number that you want to register is displayed and push the knob.
2. Push the talk switch and say [Store], or turn the “AUDIO CONTROL” knob until [Store] is displayed and push the knob.

[Store. Push the talk switch and say confirm. Otherwise, say go back.] is heard.

3. Follow voice guidance instructions, or turn the “AUDIO CONTROL” knob until [Confirm] is displayed and push the knob.

Next, input a voice tag.

For further details, see page 205.

The system may not function in the following cases:

- If there is no outgoing history.
- If the phone book is locked.

INFORMATION

- ***Up to five outgoing calls can be stored in the system.***
- ***When five outgoing calls are stored in memory, the oldest outgoing call is deleted to make room in memory for new calls.***
- ***Only the latest outgoing call is stored when the same telephone number is dialed.***
- ***A shortcut to “Redial” is available. Push the off–hook switch and then push the off–hook switch.***

—Callback

The following can be performed:

- Dial
- Delete
- Store

To enter the callback

1. Push the off–hook switch to turn the hands–free system on.
2. Follow voice guidance instructions, or turn the “AUDIO CONTROL” knob until [Callback] is displayed and push the knob.

[Callback. Most recent incoming call was XXXX (phone number)] is heard and incoming history is displayed.

[Please push the off–hook switch to dial. Otherwise, push the talk switch and say dial, previous, go back, store, or delete.] is heard.

Dial

Turn the “AUDIO CONTROL” knob until the number that you want to dial is displayed and push the knob. After that, do the one of the following:

- Push the off–hook switch.
- Push the talk switch and say [Dial].
- Turn the “AUDIO CONTROL” knob until [Dial] is displayed and push the knob.

Delete

1. Turn the “AUDIO CONTROL” knob until the dial number that you want to delete is displayed and push the knob.
2. Push the talk switch and say [Delete], or turn the “AUDIO CONTROL” knob until [Delete] is displayed and push the knob.

[Delete. Push the talk switch and say confirm. Otherwise, say go back] is heard.

3. Follow voice guidance instructions, or turn the “AUDIO CONTROL” knob until [Confirm] is displayed and push the knob.

[Deleted.] is heard.

Store

1. Turn the “AUDIO CONTROL” knob until the dial number that you want to register is displayed and push the knob.
2. Push the talk switch and say [Store], or turn the “AUDIO CONTROL” knob until [Store] is displayed and push the knob.

[Store. Push the talk switch and say confirm. Otherwise, say go back.] is heard.

3. Follow voice guidance instructions, or turn the “AUDIO CONTROL” knob until [Confirm] is displayed and push the knob.

Next, input a voice tag.

For further details, see page 205.

The system may not function in the following cases:

- If there is no incoming history.
- If the phone book is locked.

INFORMATION

- ***Up to five incoming calls can be stored in the system.***
- ***When five incoming calls are stored in memory, the oldest incoming call is deleted to make room in memory for new calls.***

—Making a phone call

If the cellular phone is not registered, this system cannot be used. See page 195 for registering a cellular phone. Make sure that [BT] is displayed and get the cellular phone ready to use.

There are 3 ways to make a phone call with this system.

- **Speed dial**

A phone call can be made with a preset button in which a phone number is registered. See page 211 for setting the preset buttons.

- **Dial by Name**

The system dials the numbers corresponding to the spoken names registered in the system.

- **Dial by Number**

The system dials to the spoken numbers.

To make a phone call

Push the off–hook switch to turn the hands–free system on.

To speed dial

1. Push the preset button where the desired number is set. The name or telephone number is displayed.
2. Push the off–hook switch to dial.

To dial by Name

1. Push the talk switch and say [Dial by name].

[Dial by name. Please push the talk switch and say the stored name, or say list names.] is heard and [Dial by Name] is displayed.

2. Push the talk switch and say the phone name, or turn the “AUDIO CONTROL” knob until the name that you want to dial is displayed and push the knob.

When using a voice command:

[XXXX (phone number) Push the off–hook switch to dial. Otherwise, push the talk switch and say dial, or go back.] is heard. After that, do the one of the following:

- Push the off–hook switch.
- Push the talk switch and say [Dial].
- Turn the “AUDIO CONTROL” knob until [Dial] is displayed and push the knob.

When using the knob:

It calls the number.

The system may not function in the following cases:

- If there is no number registered in the preset button.
- If the system does not recognize the voice command.

INFORMATION

- ***The phone numbers registered in the phone book can be retrieved.***
- ***The system does not recognize that the voice tag is not registered in the registered cellular phone. For details about voice tags, see “To add entry” on page 205.***
- ***A shortcut to [Dial by name] is available. Push the talk switch and say [Dial XXX (name you want to dial)].***

To dial by Number

1. Push the talk switch and say [Dial by Number].

[Dial by number. Please push the talk switch and say the number.] is heard and [Dial by Num] is displayed.

2. Push talk switch and say the dial number.

[Push the off–hook switch to dial. Otherwise, push the talk switch and say dial, go back, or delete.] is heard.

To dial the number, do the one of the following:

- Push the off–hook switch.
- Push the talk switch and say [Dial].
- Turn the “AUDIO CONTROL” knob until [Dial] is displayed and push the knob.

If the number exceeds 24 digits, the system may not function properly.

INFORMATION

- ***The system can recognize single digits from zero to nine, #(pound), *(star), and +(plus). Numbers that are ten or greater are not recognized.***
- ***To speed up input, it is a good idea to group all digits into a continuous string. However, you can enter each digit individually or group digits together in preferred string lengths.***

The display corresponding to each operation appears on the screen as follows:

Input operation—

You say: [Nine, nine, five]

Voice output: [995 push the off–hook switch to dial. Otherwise, push the talk switch and say dial, go back, or delete.]

Display: [995]

You say: [Seven, three, four]

Voice output: [734 push the off–hook switch to dial. Otherwise, push the talk switch and say dial, go back, or delete.]

Display: [995734]

Repeat the above procedure until the entire number that you want to dial is input.

Go back operation—

You say: [Go back]

Voice output: [Go back, the last numbers entered have been removed. Push the talk switch and continue adding numbers otherwise say dial, go back, or delete.]

Display: [995]

Repeating the above operation deletes the last digits in reverse order of input.

Delete operation—

You say: [Delete]

Voice output: [Deleted. The entire number to dial has been deleted. Please push the talk switch and say the number.]

Display: [Dial by Num]

The display will return to the initial screen that allows a number to be input.

Cancel operation—

Do either one of the following:

- ***Push the on–hook switch at anytime during the operation.***
- ***Push the talk switch and say [Cancel] after the beep at anytime during the operation except while a call is connected.***

—Receiving a phone call

When receiving a phone call, a ring tone is audible and the system changes into the telephone mode.

When receiving a phone call, the display is as follows. The display differs depending on whether or not the vehicle is in motion.

When the vehicle is stopped:
Number, name, or [Incoming] is displayed.

When the vehicle is in motion:
[Incoming] is displayed.

Do either one of the following:

- Pushing the off–hook switch allows you to talk on the phone.
- Pushing the on–hook switch refuses the call.

To adjust the ring volume, push “+” or “–” on the steering volume controls. Volume adjustment cannot be done using the audio system.

Repeatedly pushing “–” on the steering volume controls mutes the ring.

When receiving an international phone call, the name of the party may not be displayed correctly depending on the cellular phone.

To transfer a call to the phone:

The received call can be transferred from the hands–free system to the cellular phone that is connected to Bluetooth®. For details, refer to the user’s guide for the cellular phone.

—Talking on the phone

While talking on the phone, the display is as follows. The display differs depending on whether or not the vehicle is in motion.

When the vehicle is stopped:
Number is displayed.

When the vehicle is in motion:
[Talking] is displayed.

When the call is finished, push the on–hook switch.

In the following situations, your voice may not reach the party.

- Talk alternately with the other party on the phone. If you talk at the same time, the voice may not reach each other. (It is not a malfunction.)
- Keep the volume of receiving voice down. Otherwise, echo is coming up. When you talk on the phone, speak clearly towards the microphone.
- When driving on a rough road.
- When driving at high speeds.
- When the window is open.
- When the air conditioning vents face the microphone.
- When the sound of the air conditioning fan is loud.

The microphone can be muted by pushing the talk switch and say [Mute].

To transfer a call from the phone:

Pushing the off–hook switch while talking on the cellular phone that is connected to Bluetooth® allows you to talk hands–free.

A call can also be transferred by pushing the talk switch and say [Call transfer].

To transfer a call to the phone:

The call can be transferred from the hands–free system to the phone that is connected to Bluetooth®. For details, refer to the user’s guide for the cellular phone.

SECTION 1 – 9

OPERATION OF INSTRUMENTS AND CONTROLS

Air conditioning system

Manual air conditioning system
Controls 220
Air flow selector settings 223
Operating tips 223
Automatic air conditioning system
Controls 226
Air flow selector settings 230
Operating tips 230
Side vents 233
Air conditioning filter 233

Manual air conditioning system— —Controls

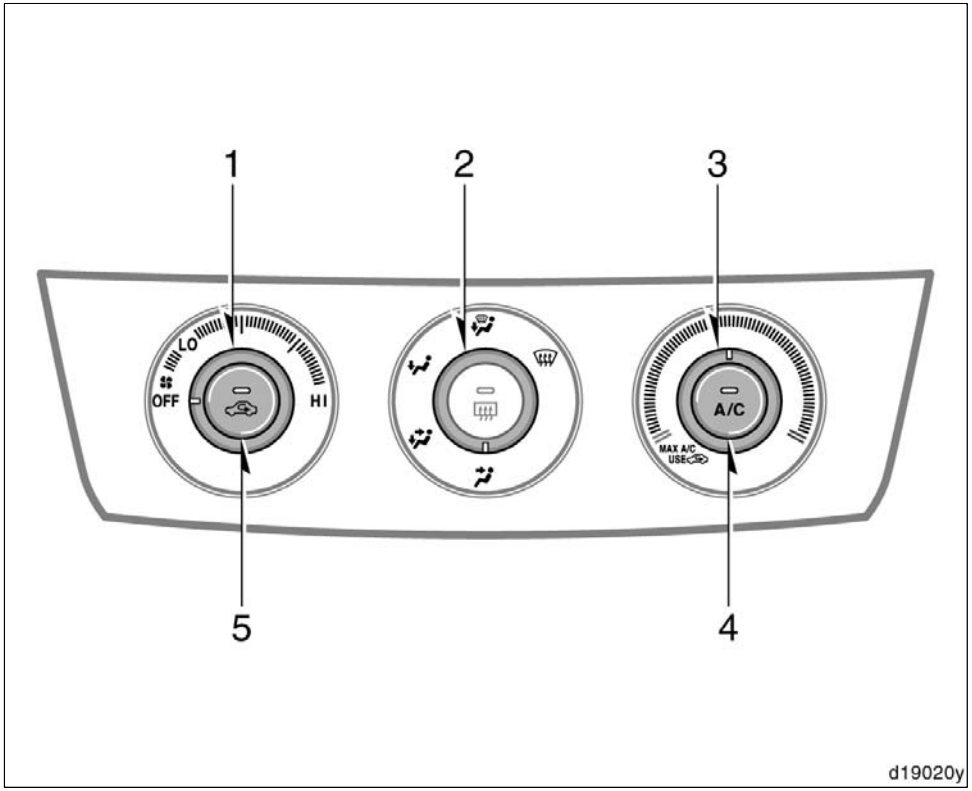

1. Fan speed selector
2. Air flow selector
3. Temperature selector
4. “A/C” button
5. Air intake selector

Fan speed selector

Turn the knob to adjust the fan speed—to the right to increase, to the left to decrease.

Temperature selector

Turn the knob to adjust the temperature—to the right to warm, to the left to cool.

“MAX A/C USE” position—Turning the temperature selector knob to the “MAX A/C USE” position turns on the air conditioning and sets the air intake selector to RECIRCULATE for quick cooling.

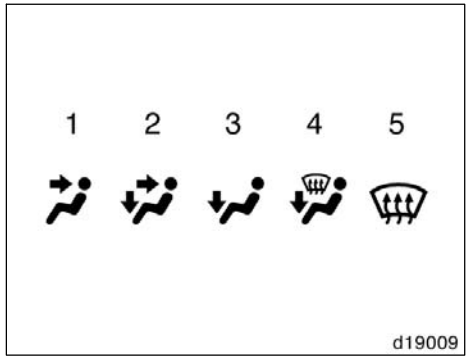

Air flow selector

Turn the knob to select the vents used for air flow.

1. **Panel—**Air flows mainly from the instrument panel vents.
2. **Bi-level—**Air flows from both the floor vents and the instrument panel vents.
3. **Floor—**Air flows mainly from the floor vents.
4. **Floor/Windshield—**Air flows mainly from the floor vents and windshield vents.

   This position allows the air intake to select FRESH automatically. This is to clean up the front view more quickly.

   If you want to return the setting to RECIRCULATE mode, press the air intake selector button once again.

   Press the “A/C” button for dehumidified heating or cooling. This setting clears the front view more quickly.
5. **Windshield—**Air flows mainly from the windshield vents.

   Turning the air flow selector to the windshield position turns on the defogging function with the purpose of clearing the front view.

   In this position, air intake selector mode changes to FRESH automatically to clean up the front view quickly. It is not possible to return to RECIRCULATE in this position.

   Press the “A/C” button for dehumidified heating or cooling. This setting clears the front view more quickly.

For details about air flow selector settings, see “—Air flow selector settings” described below.

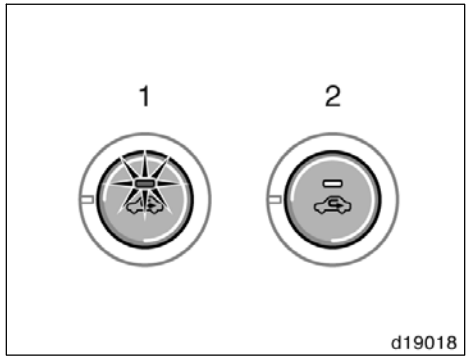

Air intake selector

Press the button to select the air source.

1. **RECIRCULATE** (indicator light is on)—Recirculates the air inside the vehicle.
2. **FRESH** (indicator light is off)—Draws outside air into the system.

To prevent fogging up of the windshield, the air intake mode may change automatically to FRESH depending on the condition of the air conditioning system.

“A/C” button

To turn on the air conditioning, press the “A/C” button. The “A/C” button indicator will come on. To turn the air conditioning off, press the button again.

If the “A/C” button indicator flashes, there is a problem in the air conditioning system and the air conditioning automatically shuts off. If this happens, take your vehicle to a Toyota dealer for service.

—Air flow selector settings

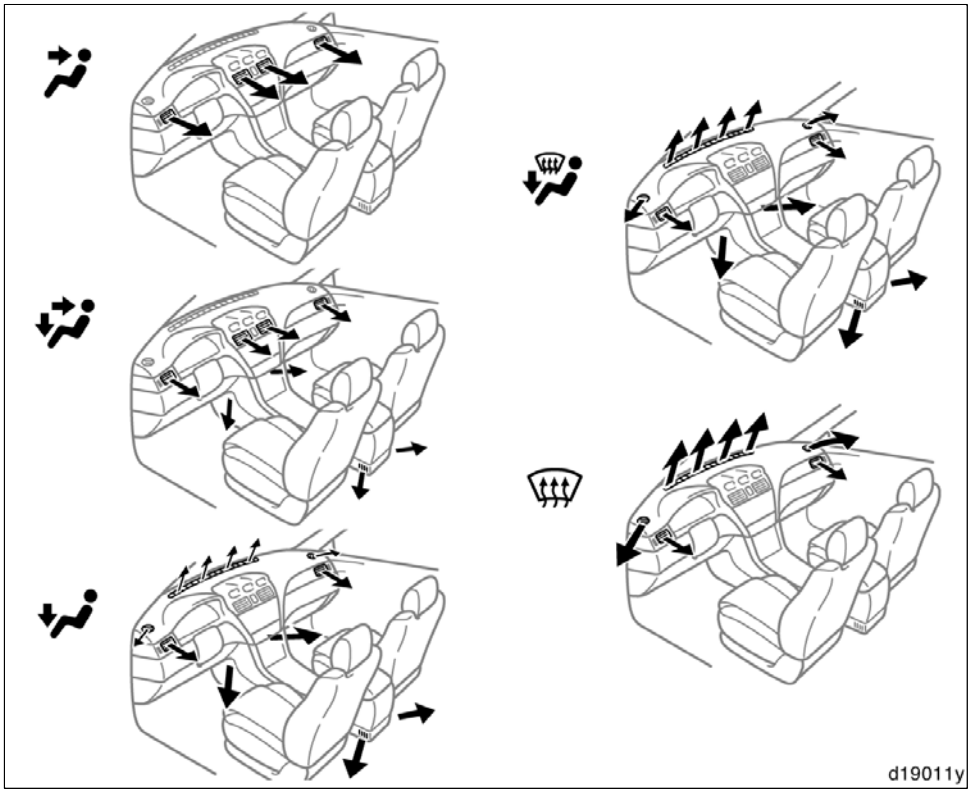

—Operating tips

- To cool off your Toyota after it has been parked in the hot sun, drive with the windows open for a few minutes. This vents the hot air, allowing the air conditioning to cool the interior more quickly.
- Make sure the air intake grilles in front of the windshield are not blocked (by leaves or snow, for example).
- On humid days, do not blow cold air on the windshield. The windshield could fog up because of the difference in air temperature on the inside and outside of the windshield.
- Keep the area under the front seats clear to allow air to circulate throughout the vehicle.
- On cold days, set the fan speed to high for a minute to help clear the intake ducts of snow or moisture. This can reduce the amount of fogging on the windows.
- When driving on dusty roads, close all windows. If dust thrown up by the vehicle is still drawn into the vehicle after closing the windows, it is recommended that the air intake selector be set to FRESH and the fan speed selector to any setting except “OFF”.

- If following another vehicle on a dusty road, or driving in windy and dusty conditions, it is recommended that the air intake selector be temporarily set to RECIRCULATE, which will close off the outside passage and prevent outside air and dust from entering the vehicle interior.

Heating

For best results, set controls as follows:

Fan speed—Any setting except “OFF”
Temperature—Towards **WARM** (red zone)
Air intake—FRESH (outside air)
Air flow—FLOOR
Air conditioning—OFF

- For quick heating, change the air intake selector mode to RECIRCULATE. To keep the windows from fogging, return to FRESH mode after the vehicle interior has been warmed.
- Press the “A/C” button on for dehumidified heating.
- Turn the air flow selector to the floor/windshield position to heat the vehicle interior while defrosting or defogging the windshield.

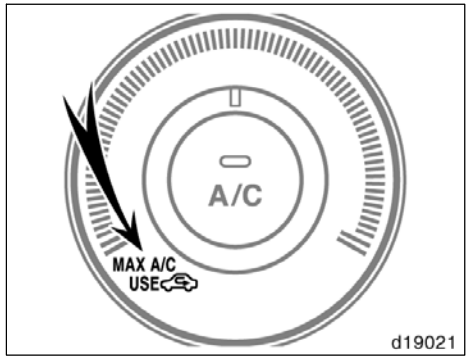

- For quick cooling, turn the temperature selector knob to the ”MAX A/C USE” position. The air conditioning will automatically turn on and the air intake selector will be set to RECIRCULATE.

Air conditioning

For best results, set controls as follows:

Fan speed—Any setting except “OFF”
Temperature—Towards **COLD** (blue zone)
Air intake—FRESH (outside air)
Air flow—PANEL
Air conditioning—ON

Ventilation

For best results, set controls as follows:

Fan speed—Any setting except “OFF”
Temperature—Towards **COLD** (blue zone)
Air intake—FRESH (outside air)
Air flow—PANEL
Air conditioning—OFF

Defogging

The inside of the windshield

For best results, set controls as follows:

Fan speed—Any setting except “OFF”
Temperature—Towards **WARM** (red zone) to heat; **COLD** (blue zone) to cool
Air intake—FRESH (outside air)
Air flow—WINDSHIELD

Turning the air flow selector to the windshield position turns on the defogging function with the purpose of clearing the front view.

When turning the air flow selector to the windshield position, the air intake selector mode changes to FRESH automatically to clean up the front view quickly. It is not possible to return to RECIRCULATE in this position.

Press the “A/C” button for dehumidified heating or cooling. This setting clears the front view more quickly.

- On humid days, do not blow cold air on the windshield—the difference between the outside and inside temperatures could make the fogging worse.

Defrosting

The outside of the windshield

For best results, set controls as follows:

Fan speed—Any setting except “OFF”
Temperature—Towards **WARM** (red zone)
Air intake—FRESH (outside air)
Air flow—WINDSHIELD

Turning the air flow selector to the windshield position turns on the defrosting function with the purpose of clearing the front view.

When turning the air flow selector to the windshield position, the air intake selector mode changes to FRESH automatically to clean up the front view quickly. It is not possible to return to RECIRCULATE in this position.

Press the “A/C” button for dehumidified heating. This setting clears the front view more quickly.

- To heat the vehicle interior while defrosting the windshield, choose floor/windshield air flow.

Automatic air conditioning system— —Controls

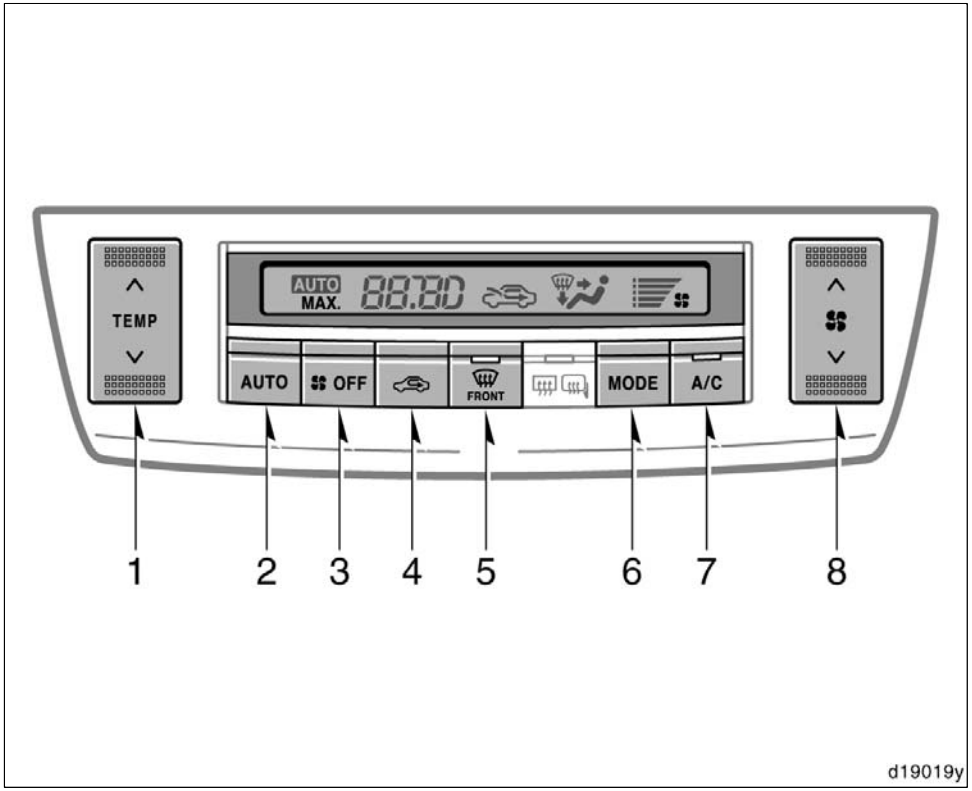

1. Temperature selector
2. “AUTO” button
3. “OFF” button
4. Air intake selector
5. Windshield air flow button
6. “MODE” button (air flow selector)
7. “A/C” button
8. Fan speed selector

“AUTO” button

For automatic operation of the air conditioning, press the “AUTO” button. “AUTO” will appear on the display to show that the automatic operation mode has been selected.

In the automatic operation mode, the air conditioning selects the most suitable fan speed, air flow, air intake and on–off of the air conditioning according to the temperature.

When you press the “AUTO” button with the air intake mode at FRESH, internal circulation may be applied for maximum cooling.

You may use manual controls if you want to select your own settings.

Fan speed selector

Push the “∧” (increase) or “∨” (decrease) side of the button to adjust the fan speed.

In automatic operation, you do not have to adjust the fan speed unless you desire another fan speed mode.

Temperature selector

To increase the temperature, press the “∧” side, to decrease it, press the “∨” side.

“MAX. COLD” appears when you adjust to maximum cooling, and “MAX. HOT” when you adjust to maximum warming.

The temperature display changes between “°C” and “°F” when the unit of the multi–information display is changed. (For details, see “Multi–information displays” on page 238 in Section 1–10.)

“OFF” button

Push the button to turn off the air conditioning system.

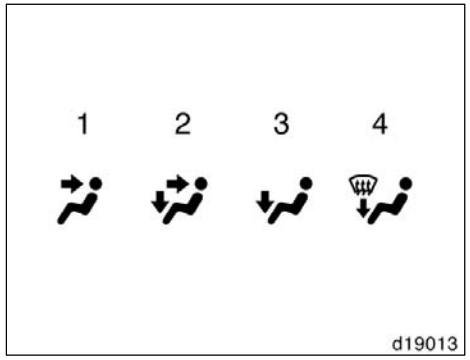

“MODE” button (air flow selector)

Push the “MODE” button to select the vents used for air flow.

In automatic operation, you do not have to select the air flow unless you desire another air flow mode.

1. **Panel—**Air flows mainly from the instrument panel vents.
2. **Bi–level—**Air flows from both the floor vents and the instrument panel vents.
3. **Floor—**Air flows mainly from the floor vents.
4. **Floor/Windshield—**Air flows mainly from the floor vents and windshield vents.

This position allows the air intake to select FRESH automatically. This is to clean up the front view more quickly.

If you want to return the setting to RECIRCULATE mode, press the air intake selector button once again.

Press the “A/C” button for dehumidified heating or cooling. This setting clears the front view more quickly.

Windshield air flow button

When this button is pressed, air flows mainly from the windshield vents and turns on the defogging function with the purpose of clearing the front view.

Pressing this button once again returns the air flow mode to the last one used.

This button allows the air intake to select FRESH automatically. This is to clean up the front view more quickly. It is not possible to return to RECIRCULATE in this mode.

Press the “A/C” button for dehumidified heating or cooling. This setting clears the front view more quickly.

For details about air flow selector settings, see “—Air flow selector settings” described below.

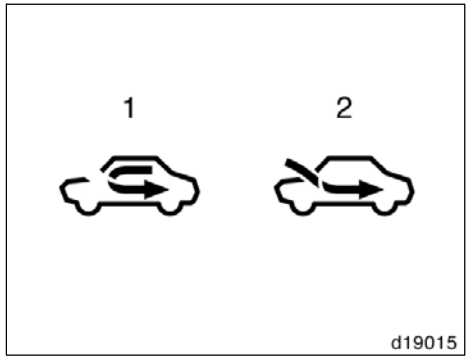

Air intake selector

Press the button to select the air source.

1. **RECIRCULATE—**Recirculates the air inside the vehicle.
2. **FRESH—**Draws outside air into the system.

To prevent fogging up of the windshield, the air intake mode may change automatically to FRESH depending on the condition of the air conditioning system.

“A/C” button

To turn on the air conditioning, press the “A/C” button. The “A/C” button indicator will come on. To turn the air conditioning off, press the button again.

If the “A/C” button indicator flashes, there is a problem in the air conditioning system and the air conditioning automatically shuts off. If this happens, take your vehicle to a Toyota dealer for service.

—Air flow selector settings

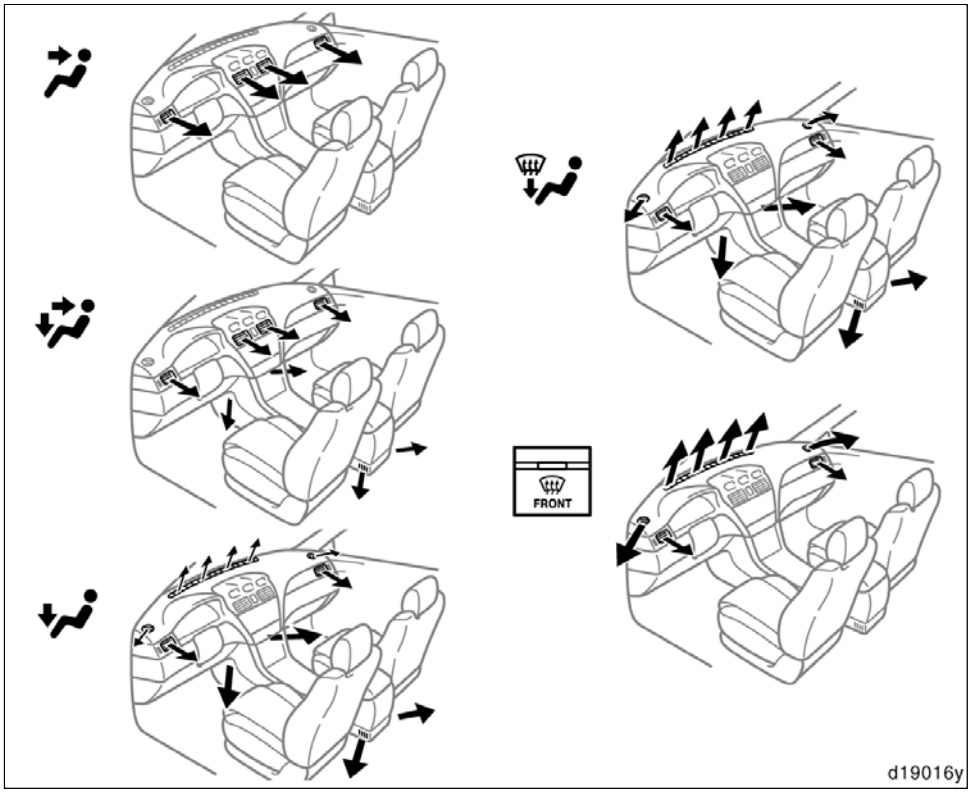

—Operating tips

- To cool off your Toyota after it has been parked in the hot sun, drive with the windows open for a few minutes. This vents the hot air, allowing the air conditioning to cool the interior more quickly.
- Make sure the air intake grilles in front of the windshield are not blocked (by leaves or snow, for example).
- On humid days, do not blow cold air on the windshield. The windshield could fog up because of the difference in air temperature on the inside and outside of the windshield.
- Keep the area under the front seats clear to allow air to circulate throughout the vehicle.
- On cold days, set the fan speed to high for a minute to help clear the intake ducts of snow or moisture. This can reduce the amount of fogging on the windows.
- When driving on dusty roads, close all windows. If dust thrown up by the vehicle is still drawn into the vehicle after closing the windows, it is recommended that the air intake selector be set to FRESH and the fan speed selector to any setting except “OFF”.

- If following another vehicle on a dusty road, or driving in windy and dusty conditions, it is recommended that the air intake selector be temporarily set to RECIRCULATE, which will close off the outside passage and prevent outside air and dust from entering the vehicle interior.

Heating

For best results, set controls as follows:

For automatic operation—

Press in the “AUTO” button.
Temperature—To the desired temperature
Air intake—FRESH (outside air)
Air conditioning—OFF

For manual operation—

Fan speed—To the desired fan speed
Temperature—Towards **WARM**
Air intake—FRESH (outside air)
Air flow—FLOOR
Air conditioning—OFF

- For quick heating, select recirculated air for a few minutes. To keep the windows from fogging, select fresh after the vehicle interior has been warmed.
- Press the “A/C” button on for dehumidified heating.
- Choose floor/windshield air flow to heat the vehicle interior while defrosting or defogging the windshield.

Air conditioning

For best results, set controls as follows:

For automatic operation—

Press in the “AUTO” button.
Temperature—To the desired temperature
Air intake—FRESH (outside air)
Air conditioning—ON

For manual operation—

Fan speed—To the desired fan speed
Temperature—Towards **COLD**
Air intake—FRESH (outside air)
Air flow—PANEL
Air conditioning—ON

- For quick cooling, select recirculated air for a few minutes.

Ventilation

For best results, set controls as follows:

For automatic operation—

Press in the “AUTO” button.
Temperature—Towards low temperature
Air intake—FRESH (outside air)
Air conditioning—OFF

For manual operation—

Fan speed—To the desired fan speed
Temperature—Towards **COLD**
Air intake—FRESH (outside air)
Air flow—PANEL
Air conditioning—OFF

Defogging and defrosting

—The inside of the windshield

For best results, set controls as follows:

—For automatic operation

Temperature—Towards high temperature to heat; low temperature to cool
Air intake—FRESH (outside air)
Air flow—WINDSHIELD

—For manual operation

Fan speed—To the desired fan speed
Temperature—Towards high temperature to heat; low temperature to cool
Air intake—FRESH (outside air)
Air flow—WINDSHIELD

Pressing the windshield air flow button turns on the defogging function with the purpose of clearing the front view.

When pressing the windshield air flow button, the air intake selects FRESH automatically. This is to clean up the front view more quickly. It is not possible to return to RECIRCULATE in this mode.

Press the “A/C” button for dehumidified heating or cooling. This setting clears the front view more quickly.

- On humid days, do not blow cold air on the windshield—the difference between the outside and inside temperatures could make the fogging worse.

—The outside of the windshield

For best results, set controls as follows:

—For automatic operation

Temperature—Towards high temperature
Air intake—FRESH (outside air)
Air flow—WINDSHIELD

—For manual operation

Fan speed—To the desired fan speed
Temperature—Towards high temperature
Air intake—FRESH (outside air)
Air flow—WINDSHIELD

Pressing the windshield air flow button turns on the defrosting function with the purpose of clearing the front view.

When pressing the windshield air flow button, the air intake selects FRESH automatically. This is to clean up the front view more quickly. It is not possible to return to RECIRCULATE in this mode.

Press the “A/C” button for dehumidified heating or cooling. This setting clears the front view more quickly.

- To heat the vehicle interior while defrosting the windshield, choose floor/windshield air flow.

Side vents

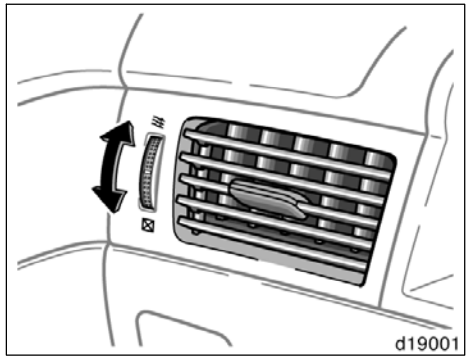

If air flow control is not satisfactory, check the side vents. The side vents may be opened or closed as shown.

Air conditioning filter—

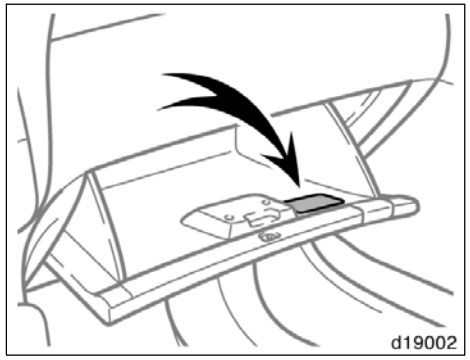

The air conditioning filter information label is placed in the glove box as shown and indicates that a filter has been installed.

The air conditioning filter prevents dust from entering the vehicle through the air conditioning vent.

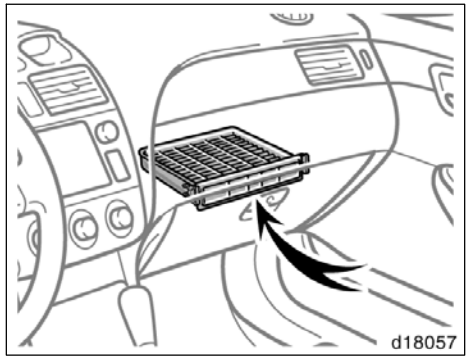

The air conditioning filter is behind the glove box.

—Checking, cleaning and replacing the air conditioning filter

The air conditioning filter may clog after long use. The filter may need to be cleaned or replaced if the air flow of the air conditioning and heater experiences extreme reductions in operating efficiency, or if the windows begin to fog up easily in FRESH mode.

To maintain the air conditioning efficiency, inspect, clean and replace the air conditioning filter according to the maintenance schedule. In dusty areas or areas with heavy traffic flow, such as inner city or desert areas, more frequent cleaning or early replacement may be required. (For scheduled maintenance information, please refer to the “Scheduled Maintenance Guide” or “Owner’s Manual Supplement”.)

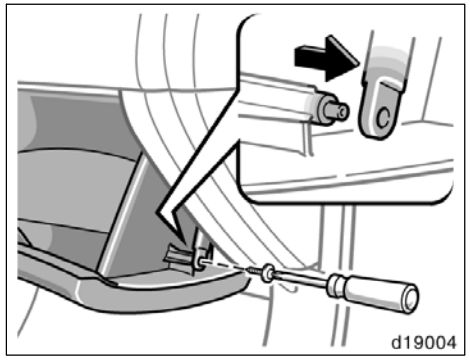

1. Open the glove box. Remove the screw with a Phillips–head screwdriver and slide the hook as shown.

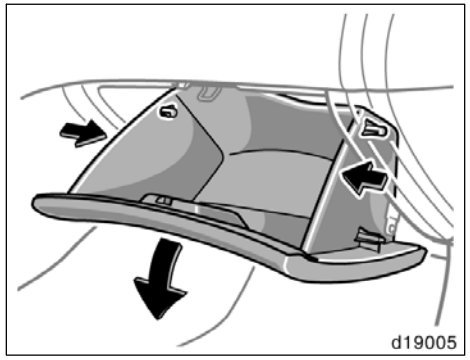

2. **Push in each side of the glove box to disconnect the claws.**

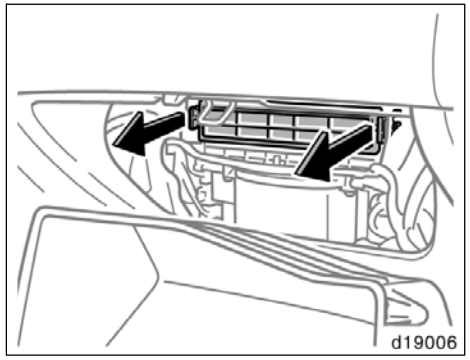

3. **Remove the filter case from the filter outlet as shown in the illustration.**

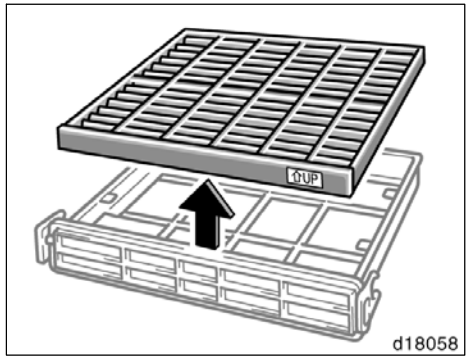

4. **Remove the filter from the filter case.**
5. **Inspect the filter on the surface.**

If it is the just moderately dusty, it may be cleaned by blowing compressed air from the reverse surface. Do not wash or oil the filter.

If it is dirty, it should be cleaned or replaced.

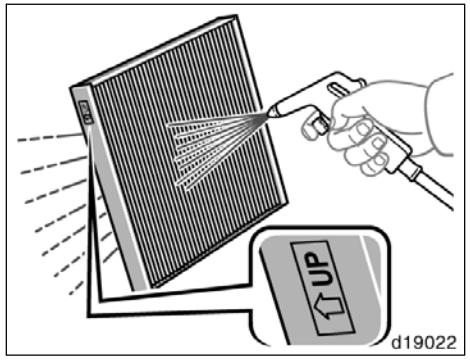

To clean the filter, blow compressed air through it from the bottom.

Hold the air gun 50 mm (2 in.) from the filter and blow for approximately 2 minutes at 500 kPa (5.0 kgf/cm^2 or bar, 72 psi).

If it is not available, have the filter cleaned by your Toyota dealer.

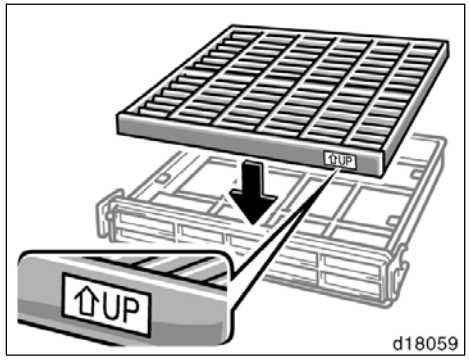

When installing the filter in the filter case, keep the “↑UP” mark pointing up.

NOTICE

To prevent damage to the air conditioning system, do the following.

- ***When using the air conditioning system, make sure that a filter is always installed.***
- ***When cleaning the filter, do not clean the filter with water.***

SECTION 1 – 10

OPERATION OF INSTRUMENTS AND CONTROLS

Other equipment

Multi–information displays 238
Compass 241
Portable ashtray 245
Power outlets 246
Garage door opener 247
Glove box 252
Auxiliary boxes 252
Rear console box 253
Cup holders 254
Storage box 255
Grocery bag hooks 255
Cargo net 255
Floor mat 256

Multi–information displays—

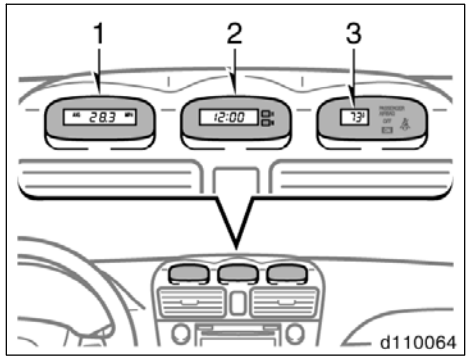

The following information is displayed on the multi–information displays.

1. **Cruise information**
2. **Clock**
3. **Outside temperature**

When the engine switch is on, the last previously used mode displayed just before the engine switch is off will appear.

If the electrical power source has been disconnected from the multi–information display, the display will automatically be set to the initial mode.

CAUTION

Do not adjust the display while the vehicle is moving. Be sure to adjust the display only when the vehicle is stopped.

SELECTING UNIT

You can select the unit between English/U.S. customary system and metric unit.

To select the unit A (English/U.S. customary system) or unit B (metric unit), push and hold the “H” and “M” buttons beside the clock for about 3 second.

The unit variations are as follows;

Information	Unit A	Unit B
Average and instantaneous fuel consumption	MPG	L/100km
Driving range	mile	km
Average vehicle speed	MPH	km/h
Outside temperature	°F	°C

This function is also linked with the automatic air conditioning display.

—Cruise information

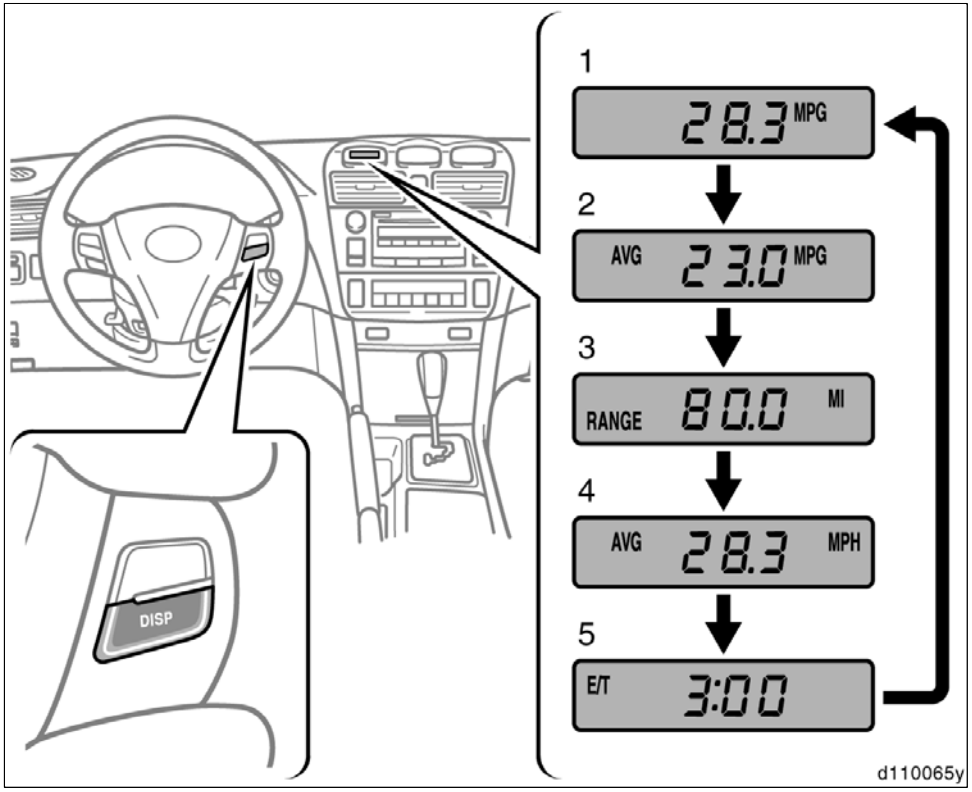

The left side display indicates the cruise information when the engine switch is in the “ON” position.

Each time you push the “DISP” button on the steering wheel, the display toggles through the following information.

1. Instantaneous fuel consumption
2. Average fuel consumption
3. Driving range
4. Average vehicle speed
5. Elapsed time

The displayed values in the display indicate general driving conditions. Accuracy varies with driving habits and road conditions.

1. Instantaneous fuel consumption (“MPG” or “L/100 km”)

The instantaneous fuel consumption is calculated and displayed based on distance and fuel consumption for 2 seconds with the engine running.

The displayed value is updated every 2 seconds.

Note that an accurate figure may not be shown in the following cases.

- When the vehicle is stopped with the engine running, the display will indicate the extremely high fuel consumption.
- When the vehicle is driving down a long slope, applying the engine brake, the display will indicate the extremely low fuel consumption.

The calculation is reset when the engine switch is turned off.

2. Average fuel consumption (“AVG. MPG” or “AVG. L/100 km”)

Average fuel consumption is calculated and displayed based on total driving distance and total fuel consumption with the engine running.

The displayed value is updated every 10 seconds.

To reset the calculations, push and hold the “DISP” button for more than 1 second.

3. Driving range (“RANGE MI” or “RANGE km”)

The distance the vehicle can travel with the remaining fuel is calculated and displayed based on the quantity of remaining fuel and past fuel consumption.

The driving range display indicates the approximate distance that you can drive until the fuel gauge reaches “E”. It is different from the actual distance traveled.

The displayed value is updated every time the fuel equivalent for 1 mile or 1 km is consumed.

Every time you refuel the vehicle, the calculation is reset. However, when only a small amount of fuel is added to the tank, the display may not be reset.

The actual driving range varies with driving habits and road conditions. If fuel consumption is good, the driving range will be longer. If fuel consumption is poor, the driving range will be shorter.

If the low fuel level warning light comes on, refuel even if the display indicates that the vehicle can be driven further.

4. Average vehicle speed (“AVG. MPH” or “AVG. km/H”)

Average vehicle speed is calculated and displayed based on total driving distance and total driving time with the engine running.

The displayed value is updated every 10 seconds.

To reset the calculations, push and hold the “DISP” button for more than 1 second.

5. Elapsed time (“E/T”)

The elapsed time after the engine starts is displayed.

When the engine is started, driving time is counted from 0:00. Up to 99:59 (99 hours, 59 minutes) can be displayed. When the driving time exceeds 99:59, the counter returns to 0:00.

To reset the calculations, push and hold the “DISP” button for more than 1 second.

—Clock

The center display indicates the time when the engine switch is in the “ACC” or “ON” position.

To reset the hour: Push the “H” button.
To reset the minutes: Push the “M” button.

—Outside temperature

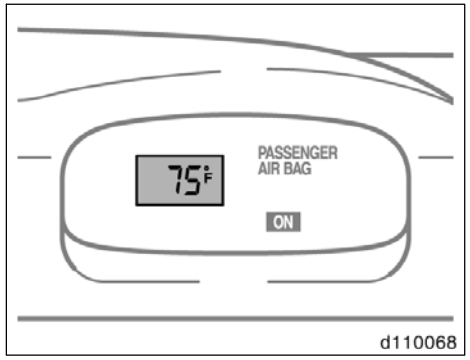

The right side display indicates the outside air temperatures when the engine switch is in the “ON” position.

The displayed temperature ranges from –30°C (–22°F) up to 50°C (122°F).

If an abnormality exists in the connection of the outside air temperature sensor, “––” will appear on the display. If “––” appears on the display, contact your Toyota dealer.

There may be a case that “––” appears momentarily when the ignition is quickly turned to “ON”. It is normal if it goes out soon.

Compass

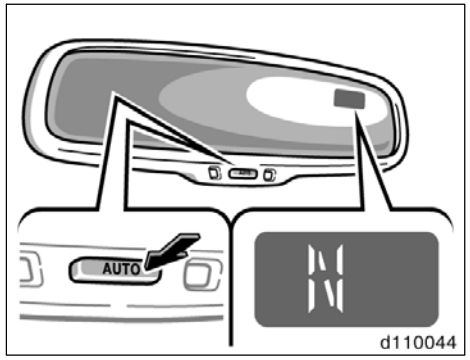

The direction is indicated on the inside rear view mirror.

If the engine switch was turned off with the system on, the system will automatically turn back on when the engine switch is turned on.

Push the “AUTO” switch for longer than 3 seconds to turn the compass system on and off.

The compass indicates the direction that the vehicle is heading. In the above case, it shows that the vehicle is heading north.

Displays	Directions
N	North
NE	Northeast
E	East
SE	Southeast
S	South
SW	Southwest
W	West
NW	Northwest

The compass may not show the correct direction in the following conditions:

- The vehicle is stopped immediately after turning.
- The compass does not adjust while the vehicle is stopped.
- The engine switch is turned off immediately after turning.
- The vehicle is on an inclined surface.
- The vehicle is in a place where the earth’s magnetic field is subject to interference by artificial magnetic fields (underground parking, under a steel tower, between buildings, roof parking, near a crossing, near a large vehicle, etc.).
- The vehicle is magnetized. (There is a magnet or a metal object on or near the inside rear view mirror.)
- The battery has been disconnected.

If your vehicle is out of the set zone, refer to the “CALIBRATING THE COMPASS” below to set the zone number.

If the deviation is small, the compass works to calibrate the direction automatically while the vehicle is in motion.

For additional precision or for complete calibrating, see “CALIBRATING THE COMPASS” below.

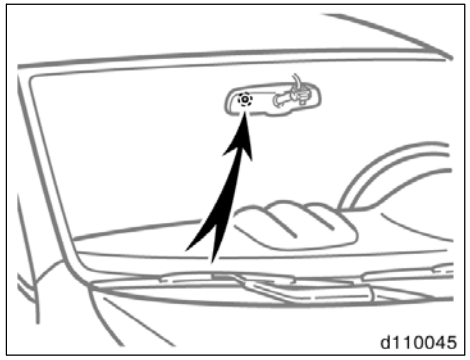

The compass sensor is in the inside rear view mirror.

NOTICE

Do not put magnets or a metal object on or near the inside rear view mirror of the vehicle. Doing this may cause malfunction of the compass sensor.

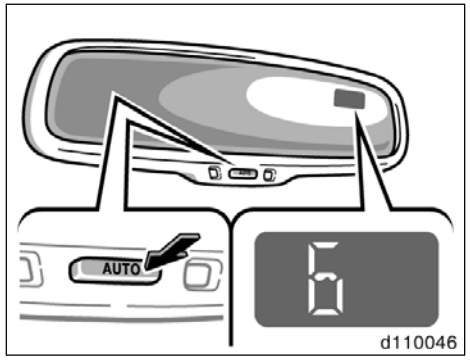

CALIBRATING THE COMPASS (deviation calibration)

The direction display on the compass deviates from the true direction determined by the earth’s magnetic field. The angle of deviation varies according to the geographic position of the vehicle.

To adjust this deviation, stop the vehicle, then push and hold the switch until the zone number appears on the display. Then push the switch, referring to the following map to select the number of the zone where the vehicle is.

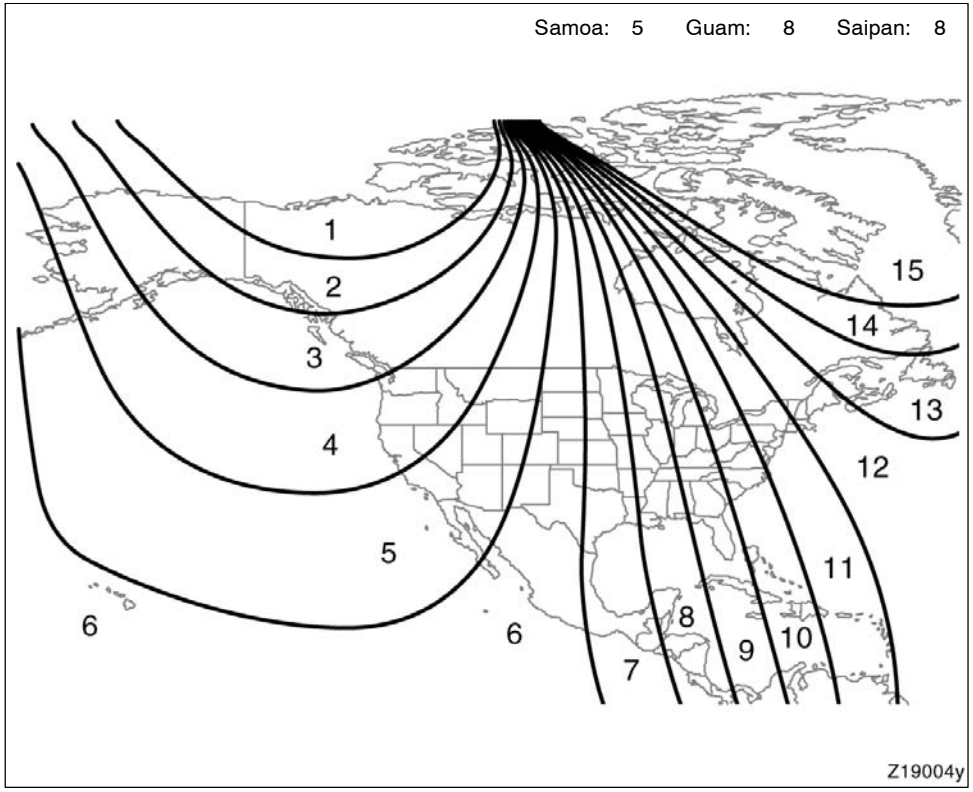

Zone numbers

After calibration, leaving the system for several seconds returns it to compass mode.

⚠ CAUTION

Do not adjust the display while the vehicle is moving. Be sure to adjust the display only when the vehicle is stopped.

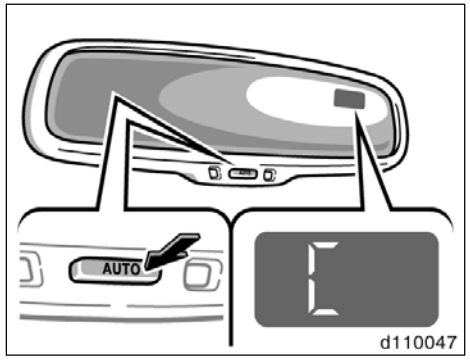

CALIBRATING THE COMPASS (circling calibration)

Sometimes the direction display on the compass may not change after a turn. To rectify this, stop the vehicle and push and hold the switch until “C” appears on the display.

If “C” appears on the display because of a drastic change in the magnetic field, perform circling calibration.

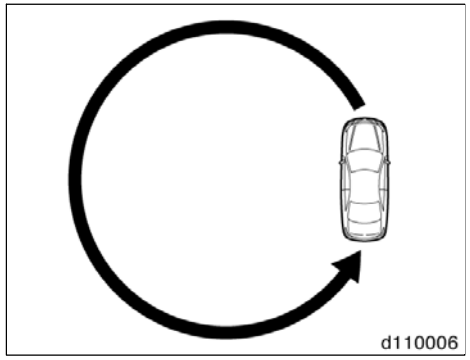

Drive the vehicle in a circle at 8 km/h (5 mph) or less. If there is not enough space to drive in a circle, drive around the block.

After driving 1 to 3 circles in the above method, calibration is completed when the direction is shown on the display.

If calibration cannot be performed because of the magnetized vehicle etc., take your vehicle to Toyota dealer.

Perform circling calibration just after you have purchased your Toyota. And then always perform circling calibration after the battery has been removed, replaced or disconnected.

- Do not perform circling calibration of the compass in a place where the earth’s magnetic field is subject to interference by artificial magnetic fields (underground parking, under a steel tower, between buildings, roof parking, near a crossing, near a large vehicle, etc.).
- During calibration, do not operate electric systems (moon roof, power windows, etc.) as they may interfere with the calibration.

CAUTION

- **When doing the circling calibration, be sure to secure a wide space, and watch out for people and vehicles in the neighborhood. Do not violate any local traffic rules while performing circling calibration.**
- **Do not adjust the display while the vehicle is moving. Be sure to adjust the display only when the vehicle is stopped.**

Portable ashtray

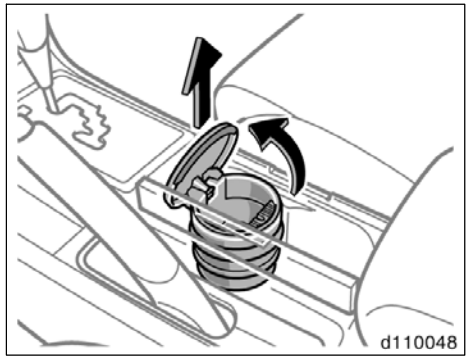

The ashtray can be removed and used outside the vehicle. To use the ashtray, raise the lid.

When finished with your cigarette, thoroughly extinguish it in the ashtray to prevent other cigarette butts from catching fire. After using the ashtray, close the lid completely.

The cup holder lid cannot be closed while the ashtray is installed.

To detach the ashtray, pull it out.

⚠ CAUTION

To reduce the chance of injury in case of an accident or sudden stop while driving, always completely close the ashtray after use.

Power outlets

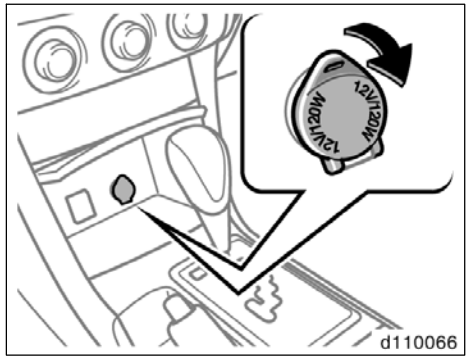

In the center console auxiliary box

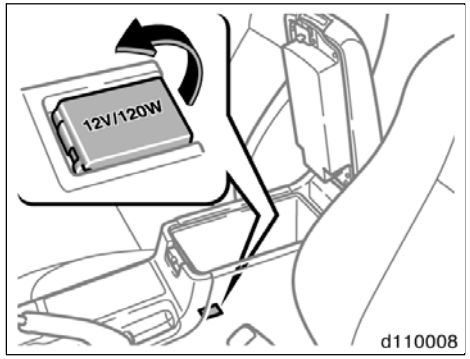

In the rear console box

The power outlets are designed for power supply for car accessories.

The engine switch must be in the “ACC” or “ON” position for the power outlet to be used.

NOTICE

- ***To prevent the fuse from being blown, do not use the electricity over the total vehicle capacity of 12V/120W.***
- ***To prevent the battery from being discharged, do not use the power outlets longer than necessary when the engine is not running.***
- ***Close the power outlet lids when the power outlets are not in use. Inserting anything other than an appropriate plug that fits the outlet, or allowing any liquid to get into the outlet may cause electrical failure or short circuits.***

Garage door opener

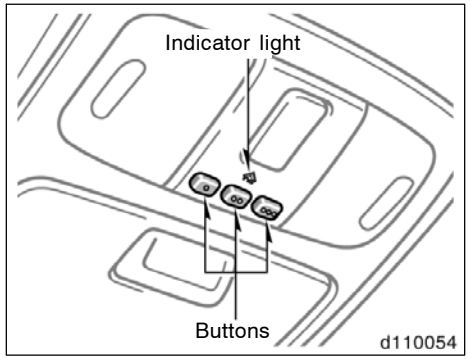

Coupe

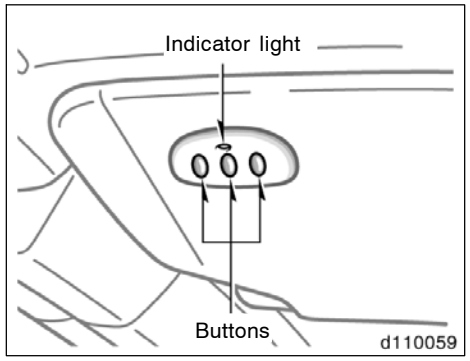

Convertible

The garage door opener (HomeLink® Universal Transceiver) is manufactured under license from HomeLink® and can be programmed to operate garage doors, gates, entry doors, door locks, home lighting systems, and security systems, etc.

(a) Programming the HomeLink®

The HomeLink® in your vehicle has 3 buttons and you can store one program for each button.

To ensure correct programming into the HomeLink®, install a new battery in the hand–held transmitter prior to programming.

The battery side of the hand–held transmitter must be pointed away from the HomeLink® during the programming process.

For Canadian users, follow the procedure in “Programming an entrance gate/programming all devices in the Canadian market”.

1. Decide which of 3 HomeLink® buttons you want to program.

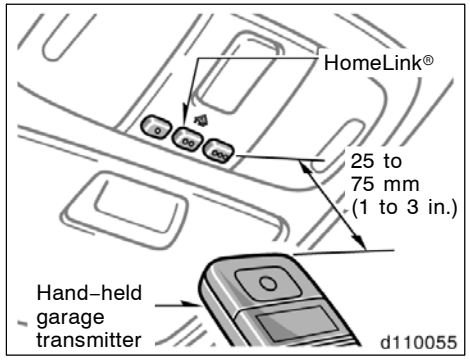

Coupe

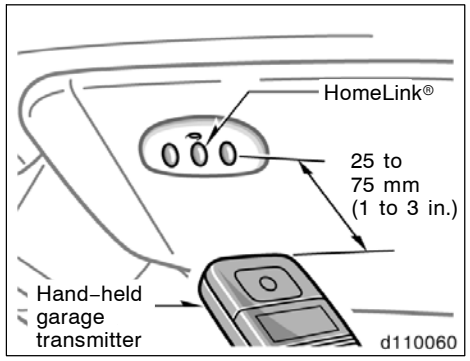

Convertible

2. Place your hand–held garage transmitter 25 to 75 mm (1 to 3 in.) away from the surface of the HomeLink®.

Keep the indicator light on the HomeLink® in view while programming.

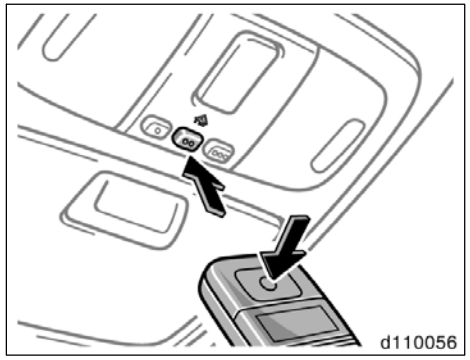

Coupe

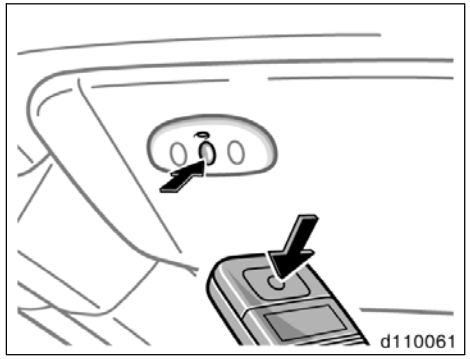

Convertible

3. Simultaneously press and hold the hand–held garage transmitter button along with the selected HomeLink® button.

Do not release the buttons until step 4 has been completed.

4. When the indicator light on the HomeLink® changes from a slow to a rapid flash after 20 seconds, you can release both buttons.

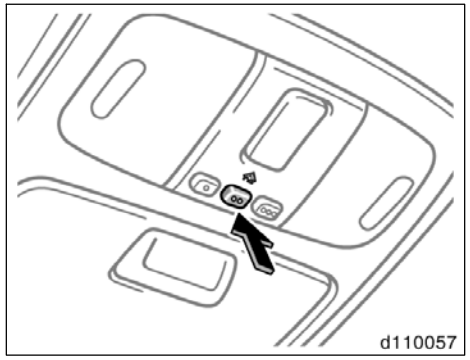

Coupe

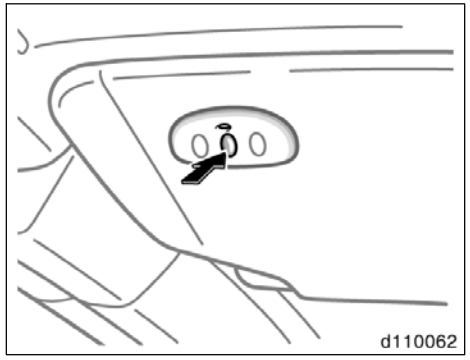

Convertible

5. Test the operation of the HomeLink® by pressing the newly programmed button. If programming a garage door opener, check to see if the garage door opens and closes.

If the garage door does not operate, identify if your garage transmitter is of the “Rolling Code” type. Press and hold the programmed HomeLink® button. The garage door has the rolling code feature if the indicator light (on the HomeLink®) flashes rapidly and then remains lit after 2 seconds. If your garage transmitter is the “Rolling Code” type, proceed to the heading “Programming a rolling code system”.

6. Repeat steps 2 through 5 for each remaining HomeLink® button to program another device.

Programming a rolling code system

If your device is “Rolling Code” equipped, it is necessary to follow steps 1 through 4 under the heading “Programming the HomeLink®” before proceeding with the steps listed below.

1. Locate the “training” button on the ceiling mounted garage door opener motor. The exact location and color of the button may vary by brand of garage door opener. Refer to the owner’s guide supplied by the garage door opener manufacturer for the location of this “training” button.
2. Press the “training” button on the ceiling mounted garage door opener motor.

Following this step, you have 30 seconds in which to initiate step 3 below.

3. Press and release the vehicle’s programmed HomeLink® button twice. The garage door may open. If the door does open, the programming process is complete. If the door does not open, press and release the button a third time. This third press and release will complete the programming process by opening the garage door.

The ceiling mounted garage door opener motor should now recognize the HomeLink® unit and be able activate the garage door up/down.

4. Repeat steps 1 through 3 for each remaining HomeLink® button to program another rolling code system.

Programming an entrance gate/programming all devices in the Canadian market

1. Decide which of the 3 HomeLink® buttons you want to program.
2. Place your hand–held gate/device transmitter 25 to 75 mm (1 to 3 in.) away from the surface of the HomeLink®.

Keep the indicator light on the HomeLink® in view while programming.

3. Press and hold the selected HomeLink® button.
4. Continuously press and release (cycle) the hand–held gate/device transmitter button every two seconds until step 5 is complete.
5. When the indicator light on the HomeLink® changes from a slow to a rapid flash after 20 seconds, you can release both buttons.
6. Test the operation of the HomeLink® by pressing the newly programmed button. Check to see if the gate/device operates correctly.
7. Repeat steps 1 through 6 for each remaining HomeLink® button to program another device.

Programming other devices

To program other devices such as home security systems, home door locks or lighting, contact your authorized Toyota dealer for assistance.

Reprogramming a button

Individual HomeLink® buttons cannot be erased, however, to reprogram a single button, follow the procedure “Programming the HomeLink®”.

(b) Operating the HomeLink®

To operate the HomeLink®, press the appropriate HomeLink® button to activate the programmed device. The HomeLink® indicator light should come on. The HomeLink® continues to send the signal for up to 20 seconds as long as the button is pressed.

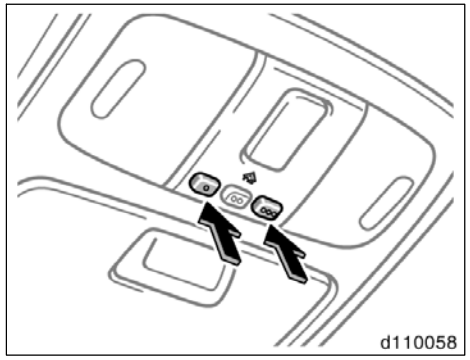

Coupe

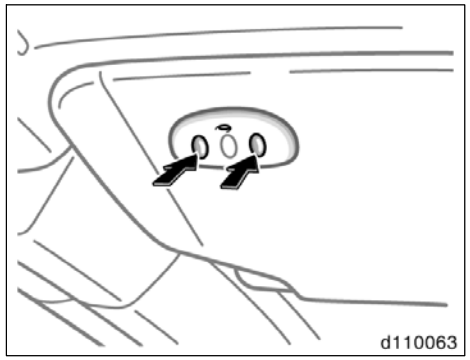

Convertible

(c) Erasing the entire HomeLink® memory (all three programs)

To erase all previously programmed codes at one time, press and hold down the 2 outside buttons for 20 seconds until the indicator light flashes.

If you sell your vehicle, be sure to erase the programs stored in the HomeLink® memory.

For additional programming assistance with your HomeLink® Universal Transceiver call the:

- Toyota Customer Experience Center at 1–800–331–4331 (U.S.A.)
- Toyota Canada Customer Interaction Centre at 1–888–869–6828 (Canada)

Refer to HomeLink® on the internet at: WWW.HOMELINK.COM

⚠ CAUTION

- **When programming the HomeLink® Universal Transceiver, you may be operating a garage door or other device. Make sure people and objects are out of the way of the garage door or other device to prevent potential harm or damage.**
- **Do not use this HomeLink® Universal Transceiver with any garage door opener that lacks the safety stop and reverse feature as required by federal safety standards. (This includes any garage door opener model manufactured before April 1, 1982.) A garage door opener which cannot detect an object (signaling the door to stop and reverse), does not meet current federal safety standards. Using a garage door opener without these features increases risk of serious injury or death.**

This device complies with Part 15 of the FCC Rules and with RSS–210 of the IC Rules. Operation is subject to the following two conditions: (1) This device may not cause harmful interference, and (2) this device must accept any interference received, including interference that may cause undesired operation.

WARNING: This transmitter has been tested and complies with FCC and IC rules. Changes or modifications not expressly approved by the party responsible for compliance could void the user’s authority to operate the device.

Glove box

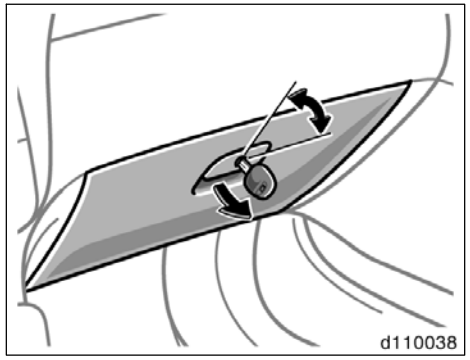

To use the glove box:

Open by pulling the lever.

Lock by inserting the master key and turning it clockwise.

Unlock by inserting the master key and turning it counterclockwise.

With the instrument panel lights on, the glove box light will come on when the glove box is open.

CAUTION

To reduce the chance of injury in case of an accident or a sudden stop, always keep the glove box door closed while driving.

Auxiliary boxes

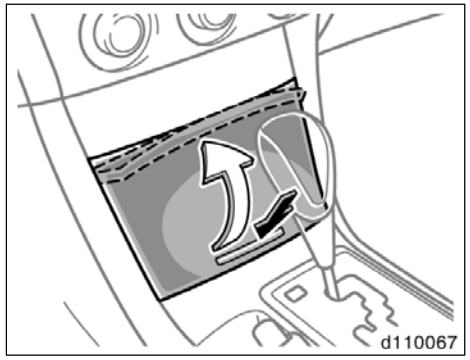

Center console

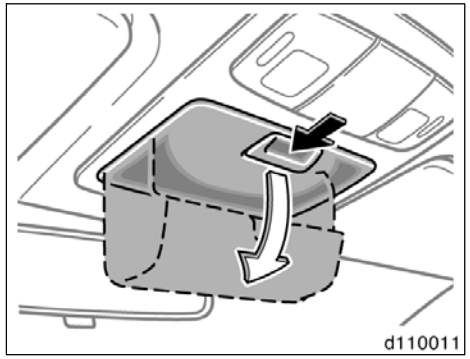

Over head console

Rear console box

To use the auxiliary box, open it as shown in the illustration.

CAUTION

To reduce the chance of injury in case of an accident or a sudden stop, always keep the auxiliary box closed while driving.

NOTICE

Over head console box—During hot weather, the interior of the vehicle becomes very hot. Do not leave anything flammable or deformable such as a lighter, glasses, etc. inside.

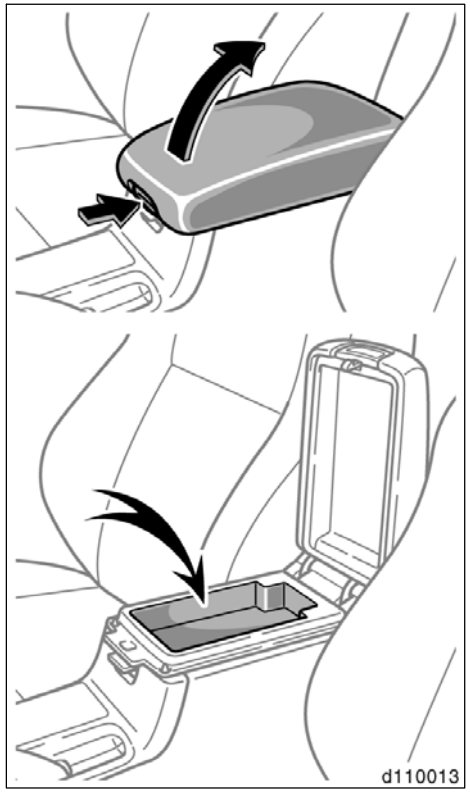

UPPER TRAY

To access the upper tray, raise the console box lid while pushing the lock release button.

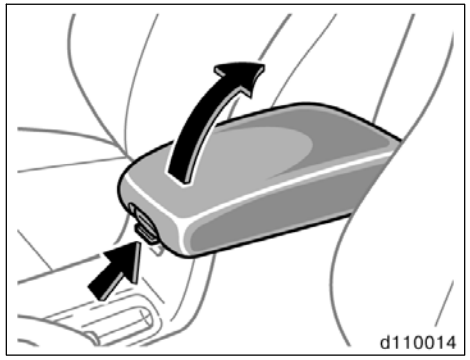

CONSOLE BOX

To access the rear console box, pull up the lock release lever while raising the rear console box lid.

⚠ CAUTION

To reduce the chance of injury in case of an accident or a sudden stop, always keep the console box closed while driving.

Cup holders

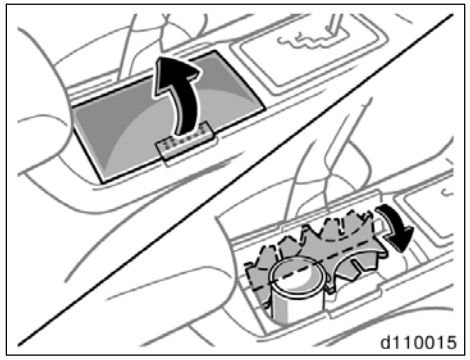

Front

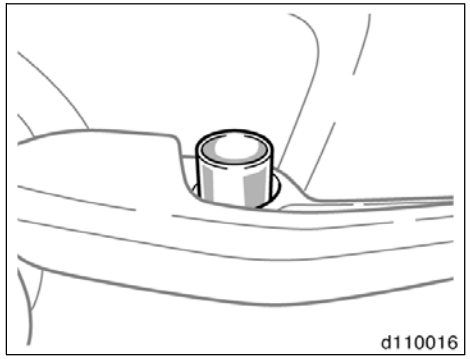

Rear

The cup holder is designed for holding cups or drink–cans securely.

Front cup holder—

To use the front cup holder, open the lid.

A cup holder adapter is located among the cup holders which are under the lid. To hold the cups or drink–cans securely, adjust the size with the adapter.

⚠ CAUTION

- **Do not place anything else other than cups or drink–cans in the cup holder, as such items may be thrown about in the compartment and possibly injure people in the vehicle during sudden braking or in an accident.**
- **To reduce the chance of injury in case of an accident or sudden stop while driving, keep the front cup holder closed when it is not in use.**

Storage box

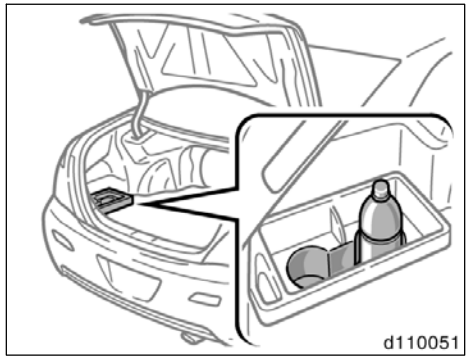

This box is designed to hold things like bottles.

Grocery bag hooks

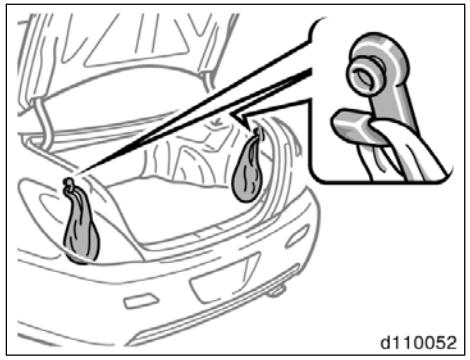

This hook is designed to hang things like grocery bags.

NOTICE
To prevent damage to the hook, avoid hanging heavy loads on it.

Cargo net

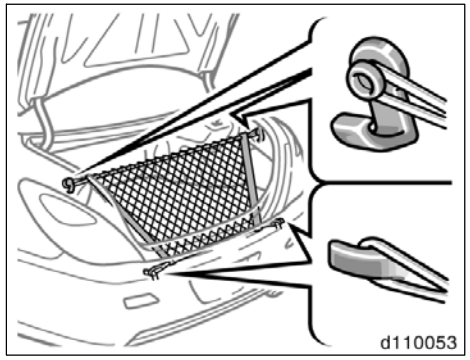

To secure belongings, hang the cargo net on the hooks.

NOTICE
◆***Do not use the net to secure sharp or heavy objects. The net will tear off.*** ◆***Be sure not to twist the net when hooking.***

Floor mat

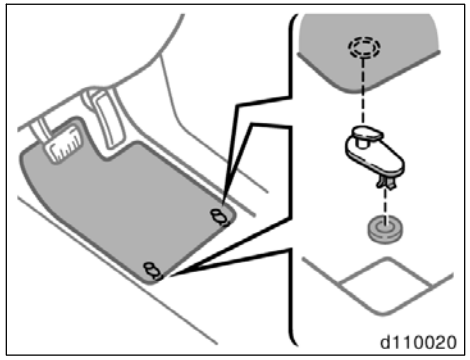

Use a floor mat of the correct size.

If the vehicle carpet and floor mat have 2 holes, then they are designed for use with locking clips. Fix the floor mat to the vehicle carpet using the clips. Lock the locking clips into the holes in the vehicle carpet.

⚠ CAUTION

Observe the following precautions. Failure to do so may result in the floor mat slipping and interfering with the movement of the pedals during driving, resulting in an accident.

- **Make sure the floor mat is properly placed on the vehicle carpet and the correct side faces upward.**
- **Do not place floor mats on top of existing mats.**

SECTION 2

INFORMATION BEFORE DRIVING YOUR TOYOTA

Information before driving your Toyota

Break–in period 258
Fuel 258
Fuel pump shut off system 260
Operation in foreign countries 260
Three–way catalytic converters 261
Engine exhaust cautions 262
Facts about engine oil consumption 263
Iridium–tipped spark plugs 264
Brake system 264
Brake pad wear limit indicators 268
Your Toyota’s identification 268
Theft prevention labels 270
Suspension and chassis 270
Tire information 271
Vehicle load limits 284
Cargo and luggage 285
Types of tires 287

Break–in period

Drive gently and avoid high speeds.

Your vehicle does not need an elaborate break–in. But following a few simple tips for the first 1600 km (1000 miles) can add to the future economy and long life of your vehicle:

- Avoid full throttle acceleration when starting and driving.
- Avoid racing the engine.
- Try to avoid hard stops during the first 300 km (200 miles).
- Do not drive slowly with the manual transmission in a high gear.
- Do not drive for a long time at any single speed, either fast or slow.
- Do not tow a trailer during the first 800 km (500 miles).

Fuel

FUEL TYPE

Your new vehicle must use only unleaded gasoline.

To help prevent gas station mix–ups, your Toyota has a smaller fuel tank opening. The special nozzle on pumps with unleaded fuel will fit it, but the larger standard nozzle on pumps with leaded gas will not.

At a minimum, the gasoline you use should meet the specifications of ASTM D4814 in the U.S.A. and CGSB 3.5–M93 in Canada.

NOTICE

Do not use leaded gasoline. Use of leaded gasoline will cause the three–way catalytic converter to lose its effectiveness and the emission control system to function improperly. Also, this can increase maintenance costs.

OCTANE RATING

Select Octane Rating 87 (Research Octane Number 91) or higher.

Use of unleaded gasoline with an octane rating or research octane number lower than 87 may result in engine knocking. Persistent knocking can lead to engine damage.

If your engine knocks...

If you detect heavy knocking even when using the recommended fuel, or if you hear steady knocking while holding a steady speed on level roads, consult your Toyota dealer.

However, occasionally, you may notice light knocking for a short time while accelerating or driving up hills. This is normal and there is no need for concern.

GASOLINE CONTAINING DETERGENT ADDITIVES

Toyota recommends the use of gasoline that contains detergent additives to avoid build–up of engine deposits.

However, all gasoline sold in the U.S. contains detergent additives to keep clean and/or clean intake systems.

QUALITY GASOLINE

Automotive manufacturers in the U.S., Europe and Japan have developed a specification for quality fuel named World–Wide Fuel Charter (WWFC) that is expected to be applied world wide. The WWFC consists of four categories that depend on required emission levels. In the U.S., category 4 has been adopted. The WWFC improves air quality by providing for better emissions in vehicle fleets, and customer satisfaction through better vehicle performance.

CLEANER BURNING GASOLINE

Cleaner burning gasoline, including reformulated gasoline that contains oxygenates such as ethanol or MTBE is available in many areas.

Toyota recommends the use of cleaner burning gasoline and appropriately blended reformulated gasoline. These types of gasoline provide excellent vehicle performance, reduce vehicle emissions, and improve air quality.

OXYGENATES IN GASOLINE

Toyota allows the use of oxygenate blended gasoline where the oxygenate content is up to 10% ethanol or 15% MTBE. If you use gasohol in your Toyota, be sure that it has an octane rating no lower than 87.

Toyota does not recommend the use of gasoline containing methanol.

GASOLINE CONTAINING MMT

Some gasoline contain an octane enhancing additive called MMT (Methylcyclopentadienyl Manganese Tricarbonyl).

Toyota does not recommend the use of gasoline that contains MMT. If fuel containing MMT is used, your emission control system may be adversely affected. The Malfunction Indicator Lamp on the instrument cluster may come on. If this happens, contact your Toyota dealer for service.

GASOLINE QUALITY

In a very few cases, you may experience driveability problems caused by the particular gasoline that you are using. If you continue to have unacceptable driveability, try changing gasoline brands. If this does not rectify your problem, then consult your Toyota dealer.

NOTICE

- ***Do not use gasohol other than stated above. It will cause fuel system damage or vehicle performance problems.***
- ***If driveability problems are encountered (poor hot starting, vaporizing, engine knock, etc.), discontinue the use.***
- ***Take care not to spill gasohol during refueling. Gasohol may cause paint damage.***

FUEL TANK CAPACITY

70 L (18.5 gal., 15.4 Imp. gal.)

Fuel pump shut off system

The fuel pump shut off system stops supplying fuel to the engine to minimize the risk of fuel leakage when the engine stalls or an airbag inflates upon collision. To restart the engine after the fuel pump shut off system activates, turn the engine switch to “ACC” or “LOCK” once and start it.

⚠ CAUTION

Inspect the ground under the vehicle before restarting the engine. If you find that fuel has leaked onto the ground, the fuel system has been damaged and is in need of repair. In this case, do not restart the engine.

Operation in foreign countries

If you plan to drive your Toyota in another country...

First, comply with the vehicle registration laws.

Second, confirm the availability of the correct fuel (unleaded and minimum octane number).

Three–way catalytic converters

The three–way catalytic converter is an emission control device installed in the exhaust system.

The purpose is to reduce pollutants in the exhaust gas.

⚠ CAUTION

- **Keep people and combustible materials away from the exhaust pipe while the engine is running. The exhaust gas is very hot.**
- **Do not drive, idle or park your vehicle over anything that may burn easily such as grass, leaves, paper or rags.**

NOTICE

A large amount of unburned gases flowing into the three–way catalytic converter may cause it to overheat and create a fire hazard. To prevent this and other damage, observe the following precautions:

- ***Use only unleaded gasoline.***
- ***Do not drive with an extremely low fuel level; running out of fuel could cause the engine to misfire, creating an excessive load on the three–way catalytic converter.***
- ***Do not allow the engine to run at idle speed for more than 20 minutes.***
- ***Avoid racing the engine.***
- ***Do not push–start or pull–start your vehicle.***
- ***Do not turn off the ignition while the vehicle is moving.***
- ***Keep your engine in good running order. Malfunctions in the engine electrical system, electronic ignition system/distributor ignition system or fuel system could cause an extremely high three–way catalytic converter temperature.***
- ***If the engine becomes difficult to start or stalls frequently, take your vehicle in for a check–up as soon as possible. Remember, your Toyota dealer knows your vehicle and its three–way catalytic converter system best.***
- ***To ensure that the three–way catalytic converter and the entire emission control system operate properly, your vehicle must receive the periodic inspections required by the Toyota Maintenance Schedule. For scheduled maintenance information, refer to the “Scheduled Maintenance Guide” or “Owner’s Manual Supplement”.***

Engine exhaust cautions

⚠ CAUTION

- **Exhaust gases include harmful carbon monoxide (CO) that is colorless and odorless. Inhaling exhaust gases may lead to death or a serious health hazard.**
- **The exhaust should be checked occasionally. If there is a hole or crack caused by corrosion, damage to a joint or abnormal exhaust noise, be sure to have the vehicle inspected and repaired by your Toyota dealer. Failure to do so may allow exhaust gases to enter the vehicle, resulting in death or a serious health hazard.**
- **If the vehicle is in a poorly ventilated area, turn the engine off. In a closed area, such as a garage, exhaust gases may collect and enter the vehicle. This may lead to death or a serious health hazard.**
- **Do not remain for a long time in a parked vehicle with the engine running. If it is unavoidable, however, do so only in an unconfined area and adjust the heating or cooling system to force outside air into the vehicle.**
- **Keep the trunk lid closed while driving. An open or unsealed trunk lid may cause exhaust gases to be drawn into the vehicle.**
- **To allow proper operation of your vehicle’s ventilation system, keep the inlet grilles in front of the windshield clear of snow, leaves, or other obstructions.**
- **If the smell of exhaust is noticed inside the vehicle, open the windows. Large amounts of exhaust in the vehicle can cause driver drowsiness and an accident, resulting in death or a serious health hazard. Have the vehicle inspected by your Toyota dealer immediately.**
- **Do not leave the engine running in an area with snow build–up, or where it is snowing. If snowbanks build up around the vehicle while the engine is running, exhaust gases may collect and enter the vehicle. This may lead to death or a serious health hazard.**
- **When taking a nap in the vehicle, always turn the engine off. Otherwise, you may accidentally move the shift lever or depress the accelerator pedal, which could cause an accident or fire due to engine overheating. Additionally, if the vehicle is parked in a poorly ventilated area, exhaust gases may collect and enter the vehicle, leading to death or a serious health hazard.**

Facts about engine oil consumption

FUNCTIONS OF ENGINE OIL

Engine oil has the primary functions of lubricating and cooling the inside of the engine, and plays a major role in maintaining the engine in proper working order.

ENGINE OIL CONSUMPTION

It is normal that an engine should consume some engine oil during normal engine operation. The causes of oil consumption in a normal engine are as follows.

- Oil is used to lubricate pistons, piston rings and cylinders. A thin film of oil is left on the cylinder wall when a piston moves downwards in the cylinder. High negative pressure generated when the vehicle is decelerating sucks some of this oil into the combustion chamber. This oil as well as some part of the oil film left on the cylinder wall is burned by the high temperature combustion gases during the combustion process.
- Oil is also used to lubricate the stems of the intake valves. Some of this oil is sucked into the combustion chamber together with the intake air and is burned along with the fuel. High temperature exhaust gases also burn the oil used to lubricate the exhaust valve stems.

The amount of engine oil consumed depends on the viscosity of the oil, the quality of the oil and the conditions the vehicle is driven under.

More oil is consumed by high–speed driving and frequent acceleration and deceleration.

A new engine consumes more oil, since its pistons, piston rings and cylinder walls have not become conditioned.

Oil consumption: Max. 1.0 L per 1000 km (1.1 qt./600 miles, 0.9 Imp. qt./600 miles)

When judging the amount of oil consumption, note that the oil may become diluted and make it difficult to judge the true level accurately.

As an example, if a vehicle is used for repeated short trips, and consumes a normal amount of oil, the dipstick may not show any drop in the oil level at all, even after 1000 km (600 miles) or more. This is because the oil is gradually becoming diluted with fuel or moisture, making it appear that the oil level has not changed.

The diluting ingredients evaporate out when the vehicle is then driven at high speeds, as on an express way, making it appear that oil is excessively consumed after driving at high speeds.

IMPORTANCE OF ENGINE OIL LEVEL CHECK

One of the most important points in proper vehicle maintenance is to keep the engine oil at the optimum level so that oil function will not be impaired. Therefore, it is essential that the oil level be checked regularly. Toyota recommends that the oil level be checked every time you refuel the vehicle.

NOTICE
Failure to check the oil level regularly could lead to serious engine trouble due to insufficient oil.

For detailed information on oil level check, see “Checking the engine oil level” on page 344 in Section 7–2.

Iridium–tipped spark plugs

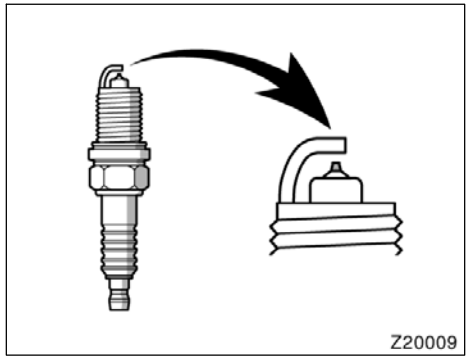

Your engine is fitted with iridium–tipped spark plugs.

NOTICE

Use only iridium–tipped spark plugs. Do not adjust gaps for engine performance or smooth driveability.

Brake system

The tandem master cylinder brake system is a hydraulic system with two separate sub–systems. If either sub–system should fail, the other will still work. However, the pedal will be harder to press, and your stopping distance will increase. Also, the brake system warning light may come on.

⚠ CAUTION

Do not drive your vehicle with only a single brake system. Have your brakes fixed immediately.

BRAKE BOOSTER

The brake booster uses engine vacuum to power–assist the brakes. If the engine should quit while you are driving, you can bring the vehicle to a stop with normal pedal pressure. There is enough reserved vacuum for one or two stops—but no more!

⚠ CAUTION

- **Do not pump the brake pedal if the engine stalls. Each push on the pedal uses up your reserved vacuum.**
- **Even if the power assist is completely lost, the brakes will still work. But you will have to push the pedal hard, much harder than normal. And your braking distance will increase.**

ANTI–LOCK BRAKE SYSTEM

The anti–lock brake system is designed to help prevent lock–up of the wheels during a sudden braking or braking on slippery road surfaces. This assists in providing directional stability and steering performance of the vehicle under these circumstances.

Effective way to press the ABS brake pedal: When the anti–lock brake system function is in action, you may feel the brake pedal pulsating and hear a noise. In this situation, to let the anti–lock brake system work for you, just hold the brake pedal down more firmly. Do not pump the brake in a panic stop. This will result in reduced braking performance.

The anti–lock brake system becomes operative after the vehicle has accelerated to a speed in excess of approximately 10 km/h (6 mph). It stops operating when the vehicle decelerates to a speed below approximately 5 km/h (3 mph).

Depressing the brake pedal on slippery road surfaces such as on a manhole cover, a steel plate at a construction site, joints in a bridge, etc. on a rainy day tends to activate the anti–lock brake system.

You may hear a click or motor sound in the engine compartment for a few seconds when the engine is started or just after the vehicle begins to move. This means that the anti–lock brake system is in the self–check mode, and does not indicate a malfunction.

When the anti–lock brake system is activated, the following conditions may occur. They do not indicate a malfunction of the system:

- You may hear the anti–lock brake system operating and feel the brake pedal pulsating and the vibrations of the vehicle body and steering wheel. You may also hear the motor sound in the engine compartment even after the vehicle is stopped.
- At the end of the anti–lock brake system activation, the brake pedal may move a little forward.

⚠ CAUTION

Do not overestimate the anti–lock brake system: Although the anti–lock brake system assists in providing vehicle control, it is still important to drive with all due care and maintain a moderate speed and safe distance from the vehicle in front of you, because there are limits to the vehicle stability and effectiveness of steering wheel operation even with the anti–lock brake system on.

If tire grip performance exceeds its capability, or if hydroplaning occurs during high speed driving in the rain, the anti–lock brake system does not provide vehicle control.

Anti–lock brake system is not designed to shorten the stopping distance: Always drive at a moderate speed and maintain a safe distance from the vehicle in front of you. Compared with vehicles without an anti–lock brake system, your vehicle may require a longer stopping distance in the following cases:

- **Driving on rough, gravel or snow–covered roads.**
- **Driving with tire chains installed.**
- **Driving over the steps such as the joints on the road.**
- **Driving on roads where the road surface is pitted or has other differences in surface height.**

Install all 4 tires of specified size at appropriate pressure: The anti–lock brake system detects vehicle speeds using the speed sensors for respective wheels’ turning speeds. The use of tires other than specified may fail to detect the accurate turning speed resulting in a longer stopping distance.

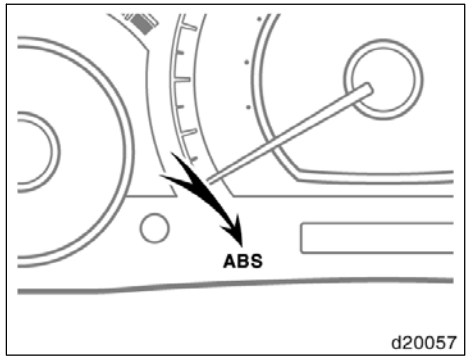

For the U.S.A.

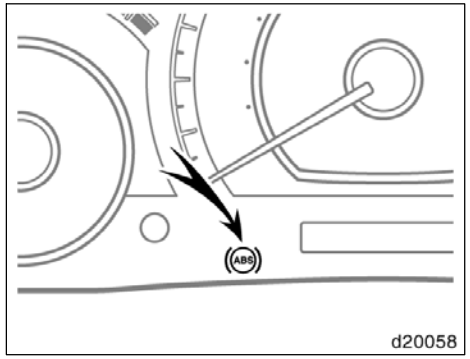

For Canada

“ABS” warning light (vehicles without vehicle stability control system)

The light comes on when the engine switch is turned to the “ON” position. If the anti–lock brake system works properly, the light turns off after a few seconds. Thereafter, if the system malfunctions, the light comes on again.

When the “ABS” warning light is on (and the brake system warning light is off), the anti–lock brake system does not operate, but the brake system still operates conventionally.

When the “ABS” warning light is on (and the brake system warning light is off), the anti–lock brake system does not operate so that the wheels could lock up during a sudden braking or braking on slippery road surfaces.

If either of the following conditions occurs, this indicates a malfunction somewhere in the components monitored by the warning light system. Contact your Toyota dealer as soon as possible to service the vehicle.

- The light does not come on when the engine switch is turned to the “ON” position, or remains on.
- The light comes on while you are driving.

A warning light turning on briefly during operation does not indicate a problem.

“ABS” warning light (vehicles with vehicle stability control system)

The light comes on when the engine switch is turned to the “ON” position. If the anti–lock brake system and the brake assist system work properly, the light turns off after a few seconds. Thereafter, if the system malfunctions, the light comes on again.

When the “ABS” warning light is on (and the brake system warning light is off), the anti–lock brake system, the brake assist system, the traction control system and the vehicle stability control system do not operate, but the brake system still operates conventionally.

When the “ABS” warning light is on (and the brake system warning light is off), the anti–lock brake system does not operate so that the wheels could lock up during a sudden braking or braking on slippery road surfaces.

If either of the following conditions occurs, this indicates a malfunction somewhere in the components monitored by the warning light system. Contact your Toyota dealer as soon as possible to service the vehicle.

- The light does not come on when the engine switch is turned to the “ON” position, or remains on.
- The light comes on while you are driving.

A warning light turning on briefly during operation does not indicate a problem.

⚠ CAUTION

If the “ABS” warning light remains on together with the brake system warning light, immediately stop your vehicle at a safe place and contact your Toyota dealer.

In this case, not only the anti–lock brake system will fail but also the vehicle will become extremely unstable during braking.

DRUM–IN–DISC TYPE PARKING BRAKE SYSTEM

Your vehicle has a drum–in–disc type parking brake system. This type of brake system needs bedding–down of the brake shoes periodically or whenever the parking brake shoes and/or drums are replaced.

Have your Toyota dealer perform the bedding–down.

BRAKE ASSIST SYSTEM (vehicles with vehicle stability control system)

When you slam the brakes on, the brake assist system judges as an emergency stop and provides more powerful braking for a driver who cannot hold down the brake pedal firmly.

When you slam the brakes on, more powerful braking will be applied. At this time, you may hear a sound in the engine compartment and feel the vibrations of the brake pedal. This does not indicate a malfunction.

The brake assist system becomes operative after the vehicle has accelerated to a speed in excess of approximately 10 km/h (6 mph). It stops operating when the vehicle decelerates to a speed below approximately 5 km/h (3 mph).

For an explanation of this system’s warning light, see “Service reminder indicators and warning buzzers” on page 133 in Section 1–6.

Brake pad wear limit indicators

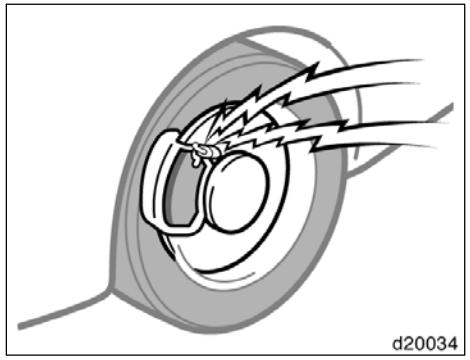

The brake pad wear limit indicators on your disc brakes give a warning noise when the brake pads are worn to where replacement is required.

If you hear a squealing or scraping noise while driving, have the brake pads checked and replaced by your Toyota dealer as soon as possible. Expensive rotor damage can result if the pads are not replaced when necessary.

Your Toyota’s identification——Vehicle identification number

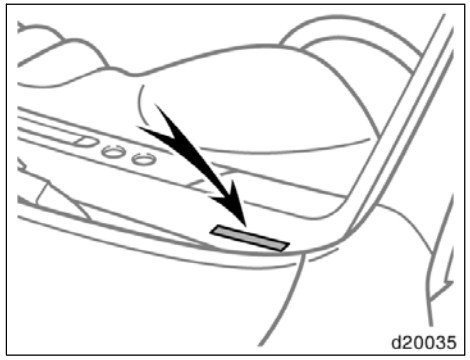

The vehicle identification number (VIN) is the legal identifier for your vehicle. This number is on the left top of the instrument panel, and can be seen through the windshield from outside.

This is the primary identification number for your Toyota. It is used in registering the ownership of your vehicle.

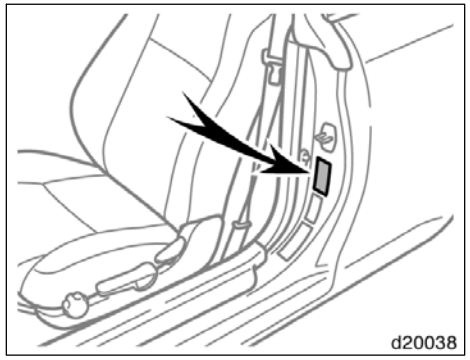

The vehicle identification number (VIN) is also on the Certification Label.

—Engine number

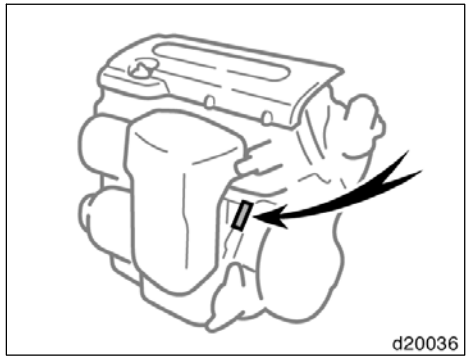

2.4 L 4–cylinder (2AZ–FE) engine

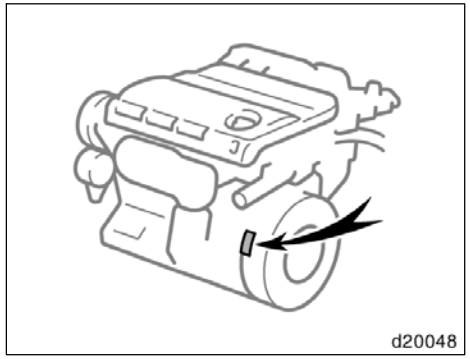

3.3 L V6 (3MZ–FE) engine

The engine number is stamped on the engine block as shown.

Theft prevention labels

Your new vehicle carries theft prevention labels which are approximately 47 mm (1.85 in.) by 12 mm (0.47 in.).

The purpose of these labels is to reduce the incidence of vehicle thefts by facilitating the tracing and recovery of parts from stolen vehicles. The label is designed so that once it is applied to a surface, any attempt to remove it will result in destroying the integrity of the label. Transferring these labels intact from one part to another, will be impossible.

NOTICE

You should not attempt to remove the theft prevention labels as it may violate certain state or federal laws.

Suspension and chassis

CAUTION

Do not modify the suspension/chassis with lift kits, spacers, springs, etc. It can cause dangerous vehicle handling characteristics, resulting in loss of control.

Tire information—
—Tire symbols (standard tire)

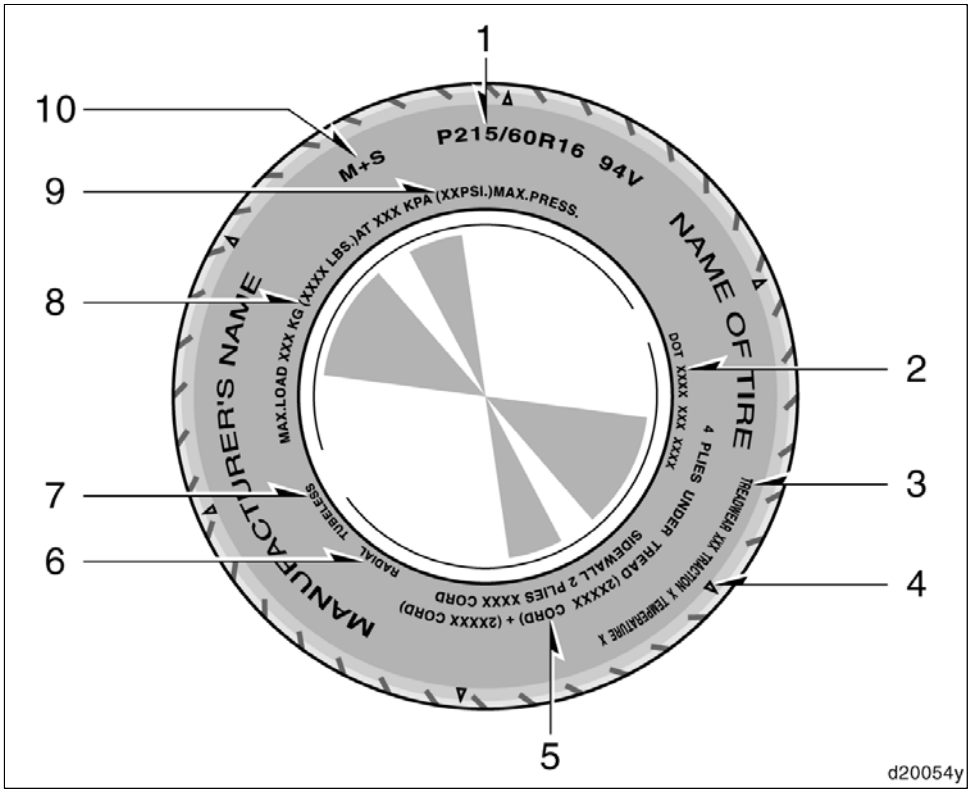

This illustration indicates typical tire symbols.

1. **Tire size—**For details, see “—Tire size” on page 275.
2. **DOT and Tire Identification Number (TIN)—**For details, see “—DOT and Tire Identification Number (TIN)” on page 274.
3. **Uniform tire quality grading—**For details, see “—Uniform tire quality grading” on page 276.
4. **The location of the treadwear indicators—**For details, see “Checking and replacing tires” on page 352.
5. **Tire ply composition and materials—**Plies mean a layer of rubber-coated parallel cords. Cords mean the strands forming the plies in the tire.
6. **Radial tires or bias-ply tires—**A radial tire has “RADIAL” on the sidewall. A tire not marked with “RADIAL” is a bias-ply tire.

7. **“TUBELESS” or “TUBE TYPE”—**A tubeless tire does not have a tube inside the tire and air is directly filled in the tire. A tube type tire has a tube inside the tire and the tube maintains the air pressure.
8. **Load limit at maximum cold tire inflation pressure—**For details, see “Checking and replacing tires” on page 352.
9. **Maximum cold tire inflation pressure—**This means the pressure to which a tire may be inflated. For details about recommended cold tire inflation pressure, see “Tires” on page 377.
10. **Summer tire or all season tire—**An all season tire has “M+S” on the sidewall. The tire not marked with “M+S” is a summer tire. For details, see “Types of tires” on page 287.

—Tire symbols (compact spare tire)

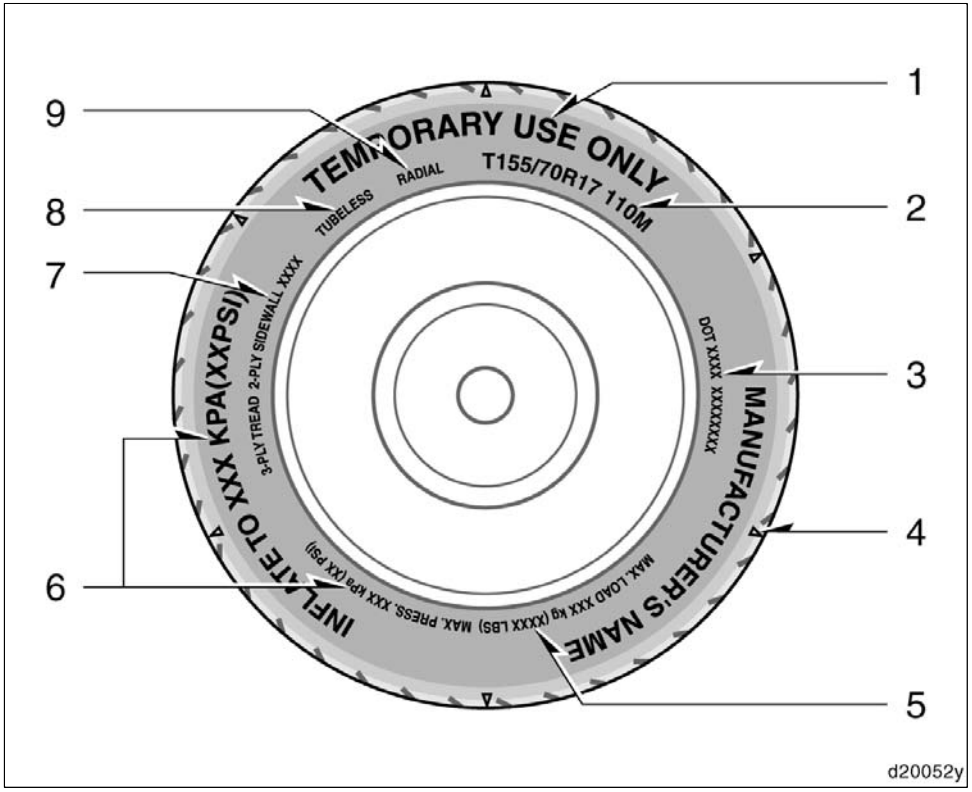

This illustration indicates typical tire symbols.

1. **“TEMPORARY USE ONLY”—**A compact spare tire is identified by the phrase “TEMPORARY USE ONLY” molded into its sidewall. This tire is designed for temporary emergency use only. For details, see “Compact spare tire” on page 306.
2. **Tire size—**For details, see “—Tire size” on page 275.
3. **DOT and Tire Identification Number (TIN)—**For details, see “—DOT and Tire Identification Number (TIN)” on page 274.
4. **The location of the treadwear indicators—**For details, see “Checking and replacing tires” on page 352.
5. **Load limit at maximum cold tire inflation pressure—**For details, see “Checking and replacing tires” on page 352.

6. **Maximum cold tire inflation pressure—**This means the pressure to which a tire may be inflated. For details about recommended cold tire inflation pressure, see “Tires” on page 377.
7. **Tire ply composition and materials—**Plies mean a layer of rubber–coated parallel cords. Cords mean the strands forming the plies in the tire.
8. **“TUBELESS” or “TUBE TYPE”—**A tubeless tire does not have a tube inside the tire and air is directly filled in the tire. A tube type tire has a tube inside the tire and the tube maintains the air pressure.
9. **Radial tires or bias–ply tires—**A radial tire has “RADIAL” on the sidewall. A tire not marked with “RADIAL” is a bias–ply tire.

—DOT and Tire Identification Number (TIN)

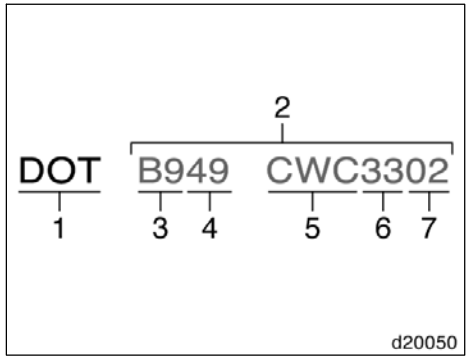

This illustration indicates typical DOT and Tire Identification Number (TIN).

1. “DOT” symbol
2. Tire Identification Number (TIN)
3. Tire manufacturer’s identification mark
4. Tire size code
5. Manufacturer’s optional tire type code (3 or 4 letters)
6. Manufacturing week
7. Manufacturing year

The “DOT” symbol certifies that the tire conforms to applicable Federal Motor Vehicle Safety Standards.

—Tire size

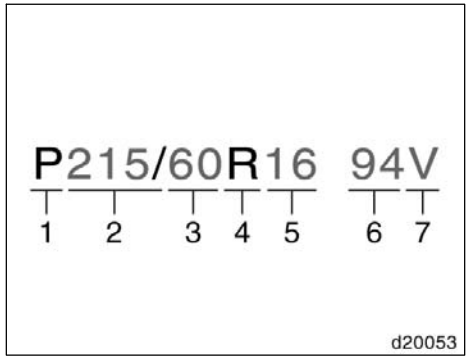

This illustration indicates typical tire size.

1. Tire use (P=Passenger car, T=Temporary use)
2. Section width (in millimeters)
3. Aspect ratio (tire height to section width)
4. Tire construction code (R=Radial, D=Diagonal)
5. Wheel diameter (in inches)
6. Load index (2 digits or 3 digits)
7. Speed symbol (alphabet with one letter)

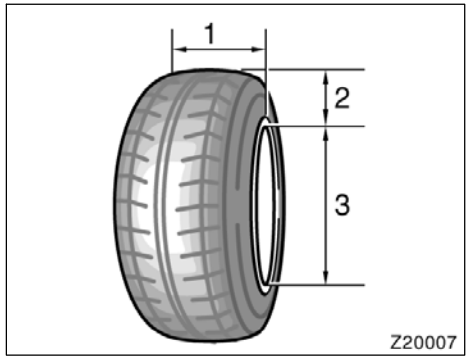

1. Section width
2. Tire height
3. Wheel diameter

—Name of each section of tire

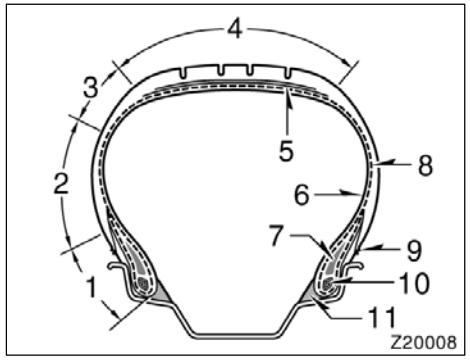

1. Bead
2. Sidewall
3. Shoulder
4. Tread
5. Belt
6. Inner liner
7. Reinforcing rubber
8. Carcass
9. Rim lines
10. Bead wires
11. Chafer

—Uniform tire quality grading

This information has been prepared in accordance with regulations issued by the National Highway Traffic Safety Administration of the U.S. Department of Transportation. It provides the purchasers and/or prospective purchasers of Toyota vehicles with information on uniform tire quality grading.

Your Toyota dealer will help answer any questions you may have as you read this information.

DOT quality grades—All passenger vehicle tires must conform to Federal Safety Requirements in addition to these grades. Quality grades can be found where applicable on the tire sidewall between tread shoulder and maximum section width. For example: Treadwear 200 Traction AA Temperature A

Treadwear—The treadwear grade is a comparative rating based on the wear rate of the tire when tested under controlled conditions on a specified government test course. For example, a tire graded 150 would wear one and a half (1–1/2) times as well on the government course as a tire graded 100. The relative performance of tires depends upon the actual conditions of their use, however, and may depart significantly from the norm due to variations in driving habits, service practices and differences in road characteristics and climate.

Traction AA, A, B, C—The traction grades, from highest to lowest, are AA, A, B, and C, and they represent the tire’s ability to stop on wet pavement as measured under controlled conditions on specified government test surfaces of asphalt and concrete. A tire marked C may have poor traction performance.

Warning: The traction grade assigned to this tire is based on braking (straight ahead) traction tests and does not include cornering (turning) traction.

Temperature A, B, C—The temperature grades are A (the highest), B, and C, representing the tire’s resistance to the generation of heat and its ability to dissipate heat when tested under controlled conditions on a specified indoor laboratory test wheel. Sustained high temperature can cause the material of the tire to degenerate and reduce tire life, and excessive temperature can lead to sudden tire failure. The grade C corresponds to a level of performance which all passenger car tires must meet under the Federal Motor Vehicle Safety Standard No.109. Grades B and A represent higher levels of performance on the laboratory test wheel than the minimum required by law.

Warning: The temperature grades for this tire are established for a tire that is properly inflated and not overloaded. Excessive speed, underinflation, or excessive loading, either separately or in combination, can cause heat buildup and possible tire failure.

—Glossary of tire terminology

Tire related term	Meaning
Cold tire inflation pressure	tire inflation pressure when the vehicle has been parked for at least 3 hours or more, or it has not been driven more than 1.5 km or 1 mile under that condition
Maximum inflation pressure	the maximum cold inflation pressure to which a tire may be inflated and it is shown on the sidewall of the tire
Recommended inflation pressure	cold tire inflation pressure recommended by a manufacturer
Accessory weight	the combined weight (in excess of those standard items which may be replaced) of automatic transmission, power steering, power brakes, power windows, power seats, radio, and heater, to the extent that these items are available as factory–installed equipment (whether installed or not)
Curb weight	the weight of a motor vehicle with standard equipment including the maximum capacity of fuel, oil, and coolant, and, if so equipped, air conditioning and additional weight optional engine
Maximum loaded vehicle weight	the sum of— (a) curb weight; (b) accessory weight; (c) vehicle capacity weight; and (d) production options weight
Normal occupant weight	68 kg (150 lb.) times the number of occupants specified in the second column of Table 1 that follows
Occupant distribution	distribution of occupants in a vehicle as specified in the third column of Table 1 that follows

Tire related term	Meaning
Production options weight	the combined weight of those installed regular production options weighing over 2.3 kg (5 lb.) in excess of those standard items which they replace, not previously considered in curb weight or accessory weight, including heavy duty brakes, ride levelers, roof rack, heavy duty battery, and special trim
Rim	a metal support for a tire or a tire and tube assembly upon which the tire beads are seated
Rim diameter (Wheel diameter)	nominal diameter of the bead seat
Rim size designation	rim diameter and width
Rim type designation	the industry of manufacturer’s designation for a rim by style or code
Rim width	nominal distance between rim flanges
Vehicle capacity weight (Total load capacity)	the rated cargo and luggage load plus 68 kg (150 lb.) times the vehicle’s designated seating capacity
Vehicle maximum load on the tire	the load on an individual tire that is determined by distributing to each axle its share of the maximum loaded vehicle weight and dividing by two
Vehicle normal load on the tire	the load on an individual tire that is determined by distributing to each axle its share of the curb weight, accessory weight, and normal occupant weight (distributed in accordance with Table 1 that follows) and dividing by two
Weather side	the surface area of the rim not covered by the inflated tire
Bead	the part of the tire that is made of steel wires, wrapped or reinforced by ply cords and that is shaped to fit the rim

Tire related term	Meaning
Bead separation	a breakdown of the bond between components in the bead
Bias ply tire	a pneumatic tire in which the ply cords that extend to the beads are laid at alternate angles substantially less than 90 degrees to the centerline of the tread
Carcass	the tire structure, except tread and sidewall rubber which, when inflated, bears the load
Chunking	the breaking away of pieces of the tread or sidewall
Cord	the strands forming the plies in the tire
Cord separation	the parting of cords from adjacent rubber compounds
Cracking	any parting within the tread, sidewall, or innerliner of the tire extending to cord material
CT	a pneumatic tire with an inverted flange tire and rim system in which the rim is designed with rim flanges pointed radially inward and the tire is designed to fit on the underside of the rim in a manner that encloses the rim flanges inside the air cavity of the tire
Extra load tire	a tire designed to operate at higher loads and at higher inflation pressures than the corresponding standard tire
Groove	the space between two adjacent tread ribs
Innerliner	the layer(s) forming the inside surface of a tubeless tire that contains the inflating medium within the tire

Tire related term	Meaning
Innerliner separation	the parting of the innerliner from cord material in the carcass
Intended outboard sidewall	(A) the sidewall that contains a whitewall, bears white lettering or bears manufacturer, brand, and/or model name molding that is higher or deeper than the same molding on the other sidewall of the tire, or (B) the outward facing sidewall of an asymmetrical tire that has a particular side that must always face outward when mounted on a vehicle
Light truck (LT) tire	a tire designated by its manufacturer as primarily intended for use on lightweight trucks or multipurpose passenger vehicles
Load rating	the maximum load that a tire is rated to carry for a given inflation pressure
Maximum load rating	the load rating for a tire at the maximum permissible inflation pressure for that tire
Maximum permissible inflation pressure	the maximum cold inflation pressure to which a tire may be inflated
Measuring rim	the rim on which a tire is fitted for physical dimension requirements
Open splice	any parting at any junction of tread, sidewall, or innerliner that extends to cord material
Outer diameter	the overall diameter of an inflated new tire
Overall width	the linear distance between the exteriors of the sidewalls of an inflated tire, including elevations due to labeling, decorations, or protective bands or ribs

Tire related term	Meaning
Passenger car tire	a tire intended for use on passenger cars, multipurpose passenger vehicles, and trucks, that have a gross vehicle weight rating (GVWR) of 10,000 lb. or less.
Ply	a layer of rubber–coated parallel cords
Ply separation	a parting of rubber compound between adjacent plies
Pneumatic tire	a mechanical device made of rubber, chemicals, fabric and steel or other materials, that, when mounted on an automotive wheel, provides the traction and contains the gas or fluid that sustains the load
Radial ply tire	a pneumatic tire in which the ply cords that extend to the beads are laid at substantially 90 degrees to the centerline of the tread
Reinforced tire	a tire designed to operate at higher loads and at higher inflation pressures than the corresponding standard tire
Section width	the linear distance between the exteriors of the sidewalls of an inflated tire, excluding elevations due to labeling, decoration, or protective bands
Sidewall	that portion of a tire between the tread and bead
Sidewall separation	the parting of the rubber compound from the cord material in the sidewall
Snow tire	a tire that attains a traction index equal to or greater than 110, compared to the ASTM E–1136 Standard Reference Test Tire, when using the snow traction test as described in ASTM F–1805–00, Standard Test Method for Signal Wheel Driving Traction in a Straight Line on Snow–and Ice–Covered Surfaces, and which is marked with an Alpine Symbol ( ) on at least one sidewall

Tire related term	Meaning
Test rim	the rim on which a tire is fitted for testing, and may be any rim listed as appropriate for use with that tire
Tread	that portion of a tire that comes into contact with the road
Tread rib	a tread section running circumferentially around a tire
Tread separation	pulling away of the tread from the tire carcass
Treadwear indicators (TWI)	the projections within the principal grooves designed to give a visual indication of the degrees of wear of the tread
Wheel–holding fixture	the fixture used to hold the wheel and tire assembly securely during testing

Table 1—Occupant loading and distribution for vehicle normal load for various designated seating capacities

Designated seating capacity, number of occupants	Vehicle normal load, number of occupants	Occupant distribution in a normally loaded vehicle
2 through 4	2	2 in front
5 through 10	3	2 in front, 1 in second seat
11 through 15	5	2 in front, 1 in second seat, 1 in third seat, 1 in fourth seat
16 through 20	7	2 in front, 2 in second seat, 2 in third seat, 1 in fourth seat

Vehicle load limits

Vehicle load limits include total load capacity, seating capacity, towing capacity and cargo capacity. Follow the load limits shown below. Total load capacity and seating capacity are also described on the tire and loading information label. For location of the tire and loading information label, see “Checking tire inflation pressure” on page 349.

Total load capacity:

Coupe
410 kg (900 lb.)

Convertible
342 kg (754 lb.)

Total load capacity means combined weight of occupants, cargo and luggage.

Seating capacity:

Coupe
Total 5 (Front 2, Rear 3)

Convertible
Total 4 (Front 2, Rear 2)

Seating capacity means the maximum number of occupants whose estimated average weight is supposed to be 68 kg (150 lb.) per person. Depending on the weight of each person, the seating capacity given may exceed the total load capacity.

NOTICE

Even if the number of occupants are within the seating capacity, do not exceed the total load capacity.

Towing capacity

Toyota does not recommend towing a trailer with your vehicle. Your vehicle is not designed for trailer towing.

Cargo capacity

Cargo capacity may increase or decrease depending on the size (weight) and the number of occupants. For details, see “—Capacity and distribution” that follows.

⚠ CAUTION

Do not apply the load more than each load limit. That may cause not only damage to the tires, but also deterioration to the steering ability and braking ability, which may cause an accident.

Cargo and luggage—
—Stowage precautions

When stowing cargo and luggage in the vehicle, observe the following:

- Put cargo and luggage in the trunk when at all possible. Be sure all items are secured in place.
- Be careful to keep the vehicle balanced. Locating the weight as far forward as possible helps maintain balance.
- For better fuel economy, do not carry unneeded weight.

⚠ CAUTION

- **To prevent cargo and luggage from sliding forward during braking, do not stack anything in the enlarged trunk. Keep cargo and luggage low, as close to the floor as possible.**

- **Never allow anyone to ride in the enlarged trunk. It is not designed for passengers. They should ride in their seats with their seat belts properly fastened. Otherwise, they are much more likely to suffer death or serious bodily injury, in the event of sudden braking or a collision.**
- **Do not place anything on the package tray behind the rear seatback. Such items may be thrown about and possibly injure people in the vehicle during sudden braking or an accident.**
- **Do not drive with objects left on top of the instrument panel. They may interfere with the driver’s field of view. Or they may move during sharp vehicle acceleration or turning, and impair the driver’s control of the vehicle. In an accident they may injure the vehicle occupants.**

—Capacity and distribution

Cargo capacity depends on the total weight of the occupants.

(Cargo capacity) = (Total load capacity) – (Total weight of occupants)

Steps for Determining Correct Load Limit—

(1) Locate the statement “The combined weight of occupants and cargo should never exceed XXX kg or XXX lbs.” on your vehicle’s placard.

(2) Determine the combined weight of the driver and passengers that will be riding in your vehicle.

(3) Subtract the combined weight of the driver and passengers from XXX kg or XXX lbs.

(4) The resulting figure equals the available amount of cargo and luggage load capacity. For example, if the “XXX” amount equals 1400 lbs. and there will be five 150 lb passengers in your vehicle, the amount of available cargo and luggage load capacity is 650 lbs. (1400–750 (5x150)=650 lbs.)

(5) Determine the combined weight of luggage and cargo being loaded on the vehicle. That weight may not safely exceed the available cargo and luggage load capacity calculated in Step 4.

(6) If your vehicle will be towing a trailer, load from your trailer will be transferred to your vehicle. Consult this manual to determine how this reduces the available cargo and luggage load capacity of your vehicle.

Toyota does not recommend towing a trailer with your vehicle. Your vehicle is not designed for trailer towing.

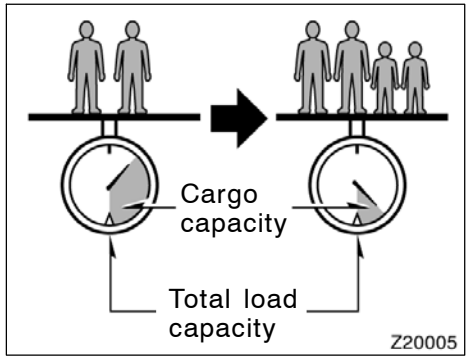

Example on Your Vehicle

Coupe—In case that 2 people with the combined weight of 166 kg (366 lb.) are riding in your vehicle with the total load capacity of 410 kg (900 lb.), the available amount of cargo and luggage load capacity will be as follows:
410 kg – 166 kg = 244 kg.
(900 lb. – 366 lb. = 534 lb.)

Convertible—In case that 2 people with the combined weight of 166 kg (366 lb.) are riding in your vehicle with the total load capacity of 342 kg (754 lb.), the available amount of cargo and luggage load capacity will be as follows:
342 kg – 166 kg = 176 kg.
(754 lb. – 366 lb. = 388 lb.)

From this condition, if 2 more passengers with the combined weight of 93 kg (205 lb.) get on, the available cargo and luggage load will be reduced as follows:

Coupe
244 kg – 93 kg = 151 kg.
(534 lb. – 205 lb. = 329 lb.)

Convertible
176 kg – 93 kg = 83 kg.
(388 lb. – 205 lb. = 183 lb.)

As shown in the above example, if the number of occupants increases, the cargo and luggage load equaling the combined weight of occupants who got on later must be reduced. In other words, if the increase in the number of occupants causes the excess of the total load capacity (combined weight of occupants plus cargo and luggage load), you have to reduce the cargo and luggage on your vehicle.

For details about total load capacity, see “Vehicle load limits” on page 284.

⚠ CAUTION

Even if the total load of occupant’s weight and the cargo load is less than the total load capacity, do not apply the load unevenly. That may cause not only damage to the tire but also deterioration to the steering ability due to imbalance of the vehicle possibly causing an accident.

Types of tires

Determine what kind of tires your vehicle is originally equipped with.

1. Summer tires

Summer tires are high–speed capability tires best suited to highway driving under dry conditions.

Since summer tires do not have the same traction performance as snow tires, summer tires are inadequate for driving on snow–covered or icy roads. For driving on snow–covered or icy roads, we recommend using snow tires. If installing snow tires, be sure to replace all four tires.

2. All season tires

All season tires are designed to provide better traction in snow and to be adequate for driving in most winter conditions, as well as for use all year round.

All season tires, however, do not have adequate traction performance compared with snow tires in heavy or loose snow. Also, all season tires fall short in acceleration and handling performance compared with summer tires in highway driving.

The details about how to distinguish summer tires from all season tires are described on page 271.

⚠ CAUTION

- **Do not mix summer and all season tires on your vehicle as this can cause dangerous handling characteristics, resulting in loss of control.**
- **Do not use tires other than the manufacturer’s designated tires, and never mix tires or wheels of the sizes different from the originally equipped tires and wheels.**

SECTION 3

STARTING AND DRIVING

Starting and driving

Before starting the engine 290
How to start the engine 290
Tips for driving in various conditions 291
Driving in the rain 292
Winter driving tips 293
Dinghy towing 294
Trailer towing 295
How to save fuel and make your vehicle last longer 296

Before starting the engine

1. Check the area around the vehicle before entering it.
2. Adjust seat position, seatback angle, seat cushion height, head restraint height and steering wheel angle and length.
3. Adjust the inside and outside rear view mirrors.
4. Lock all doors.
5. Fasten seat belts.

How to start the engine— (a) Before cranking

1. Apply the parking brake firmly.
2. Turn off unnecessary lights and accessories.
3. **Manual transmission:** Press the clutch pedal to the floor and shift the transmission into neutral. Hold the clutch pedal to the floor until the engine is started. A starter safety device will prevent the starter from operating if the clutch pedal is not fully depressed.

   Automatic transmission: Put the selector lever in “P”. If you need to restart the engine while the vehicle is moving, put the selector lever in “N”. A starter safety device will prevent the starter from operating if the selector lever is in any drive position.
4. **Automatic transmission only:** Depress the brake pedal and hold it to the floor until driving off.

(b) Starting the engine

Before starting the engine, be sure to follow the instructions in “(a) Before cranking”.

Normal starting procedure

The multiport fuel injection system/sequential multiport fuel injection system in your engine automatically controls the proper air–fuel mixture for starting. You can start a cold or hot engine as follows:

With your foot off the accelerator pedal, crank the engine by turning the engine switch to “START”. Release it when the engine starts.

Engine should be warmed up by driving, not in idle. For warming up, drive with smoothly turning engine until engine coolant temperature is within normal range.

If the engine stalls...

Simply restart it, using the correct procedure given in normal starting.

If the engine will not start...

See “If your vehicle will not start” on page 300 in Section 4.

NOTICE

- ***Do not crank for more than 30 seconds at a time. This may overheat the starter and wiring systems.***
- ***Do not race a cold engine.***
- ***If the engine becomes difficult to start or stalls frequently, have the engine checked immediately.***

Tips for driving in various conditions

- Always slow down in gusty crosswinds. This will allow you much better control.
- Drive slowly onto curbs and, if possible, at a right angle. Avoid driving onto high, sharp–edged objects and other road hazards. Failure to do so can lead to severe tire damage such as a tire burst.

  Drive slowly when passing over bumps or traveling on a bumpy road. Otherwise, the impact could cause severe damage to the tires and/or wheels.
- When parking on a hill, turn the front wheels until they touch the curb so that the vehicle will not roll. Apply the parking brake, and place the transmission in “P” (automatic) or in first or reverse (manual). If necessary, block the wheels.
- Washing your vehicle or driving through deep water may get the brakes wet. To see whether they are wet, check that there is no traffic near you, and then press the pedal lightly. If you do not feel a normal braking force, the brakes are probably wet. To dry them, drive the vehicle cautiously while lightly pressing the brake pedal with the parking brake applied. If they still do not work safely, pull to the side of the road and call a Toyota dealer for assistance.

⚠ CAUTION

- **Before driving off, make sure that the parking brake is fully released and the parking brake reminder light is off.**
- **Do not leave your vehicle unattended while the engine is running.**
- **Do not rest your foot on the brake pedal while driving. It can cause dangerous overheating, needless wear, and poor fuel economy.**
- **To drive down a long or steep hill, reduce your speed and downshift. Remember, if you ride the brakes excessively, they may overheat and not work properly.**

- **Be careful when accelerating, upshifting, downshifting or braking on a slippery surface. Sudden acceleration or engine braking could cause the vehicle to skid or spin.**
- **Do not drive in excess of the speed limit. Even if the legal speed limit permits it, do not drive over 140 km/h (85 mph) unless your vehicle has high–speed capability tires. Driving over 140 km/h (85 mph) may result in tire failure, loss of control and possible injury. Be sure to consult a tire dealer to determine whether the tires on your vehicle are high–speed capability tires or not before driving at such speeds.**
- **Do not continue normal driving when the brakes are wet. If they are wet, your vehicle will require a longer stopping distance, and it may pull to one side when the brakes are applied. Also, the parking brake will not hold the vehicle securely.**

Driving in the rain

Driving on a slippery road surface

Drive carefully when it is raining, because visibility will be reduced, the windows may become fogged–up, and the road will be slippery.

- Drive carefully when it starts to rain, because the road surface will be especially slippery.
- Refrain from high speeds when driving on an expressway in the rain, because there may be a layer of water between the tires and the road surface, preventing the steering and brakes from operating properly.

⚠ CAUTION

- **Sudden braking, acceleration and steering when driving on a slippery road surface may cause tire slippage and reduce your ability to control the vehicle, resulting in an accident.**
- **Sudden changes in engine speed, such as sudden engine braking, may cause the vehicle to skid, resulting in an accident.**
- **After driving through a puddle, lightly depress the brake pedal to make sure that the brakes are functioning properly. Wet brake pads may prevent the brakes from functioning properly. If the brakes on only one side are wet and not functioning properly, steering control may be affected, resulting in an accident.**

When encountering flooded roads

Do not drive on a road that has flooded after heavy rain etc. Doing so may cause serious damage to the vehicle.

NOTICE

Driving on a flooded road may cause the engine to stall as well as cause serious vehicle malfunctions such as shorts in electrical components and engine damage from water immersion. In the event that you drive on a flooded road and the vehicle is flooded, be sure to have your Toyota dealer check brake function, changes in quantity and quality of engine oil, transaxle fluid, etc. and lubricant condition for the bearings and suspension joints (where possible) and the function of all joints and bearings.

Winter driving tips

Make sure your coolant is properly protected against freezing.

Only use “Toyota Super Long Life Coolant” or similar high quality ethylene glycol based non–silicate, non–amine, non–nitrite, and non–borate coolant with long–life hybrid organic acid technology. (Coolant with long–life hybrid organic acid technology is a combination of low phosphates and organic acids.)

See “Checking the engine coolant level” on page 346 in Section 7–2 for details of coolant type selection.

For the U.S.A.—“Toyota Super Long Life Coolant” is a mixture of 50% coolant and 50% deionized water. This coolant provides protection down to about –35°C (–31°F).

For Canada—“Toyota Super Long Life Coolant” is a mixture of 55% coolant and 45% deionized water. This coolant provides protection down to about –42°C (–44°F).

NOTICE

Do not use plain water alone.

Check the condition of the battery and cables.

Cold temperatures reduce the capacity of any battery, so it must be in top shape to provide enough power for winter starting. Section 7–3 tells you how to visually inspect the battery. Your Toyota dealer and most service stations will be pleased to check the level of charge.

Make sure the engine oil viscosity is suitable for the cold weather.

See page 344 in Section 7–2 for recommended viscosity. Leaving a heavy summer oil in your vehicle during winter months may cause harder starting. If you are not sure about which oil to use, call your Toyota dealer—they will be pleased to help.

Keep the door locks from freezing.

Squirt lock de–icer or glycerine into the locks to keep them from freezing.

Use a washer fluid containing an anti-freeze solution.

This product is available at your Toyota dealer and most auto parts stores. Follow the manufacturer’s directions for how much to mix with water.

NOTICE

Do not use engine antifreeze or any other substitute because it may damage your vehicle’s paint.

Do not use your parking brake when there is a possibility it could freeze.

When parking, put the transmission into “P” (automatic) or into first or reverse (manual) and block the rear wheels. Do not use the parking brake, or snow or water accumulated in and around the parking brake mechanism may freeze, making it hard to release.

Keep ice and snow from accumulating under the fenders.

Ice and snow built up under your fenders can make steering difficult. During bad winter driving, stop and check under the fenders occasionally.

Depending on where you are driving, we recommend you carry some emergency equipment.

Some of the things you might put in the vehicle are tire chains, window scraper, bag of sand or salt, flares, small shovel, jumper cables, etc.

Dinghy towing (with automatic transmission)

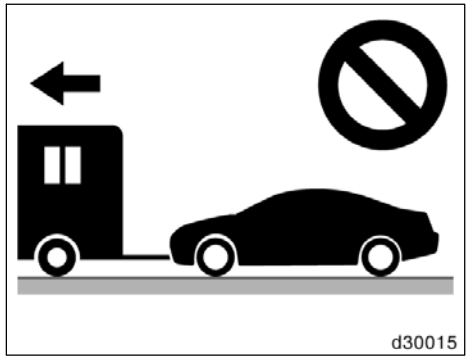

Your vehicle is not designed to be dinghy towed (with four wheels on the ground) behind a motorhome.

NOTICE

Do not tow your vehicle with four wheels on the ground. This may cause serious damage to your vehicle.

Dinghy towing (with manual transmission)

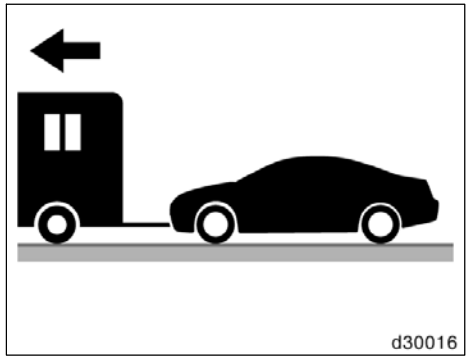

Your vehicle can be dinghy towed (with four wheels on the ground) from the front behind a motorhome.

⚠ CAUTION

Dinghy towing requires special equipment and accessories. Please refer to your service outlet of the motorhome manufacture for the recommended equipment.

NOTICE

Dinghy towing does not eliminate the possibility of damage to your vehicle.

DINGHY TOWING TIPS

Before dinghy towing, be sure to observe the following in order to reduce the damage to your vehicle.

1. Put the shift lever in neutral.
2. Turn the engine switch to the “ACC” position. Make sure the audio is turned off and any item is not plugged into the power outlet.

NOTICE
To avoid the locking of the steering wheel, turn the engine switch to the “ACC” position.

3. Release the parking brake.

After dinghy towing, let the engine idle for more than 3 minutes before driving the vehicle.

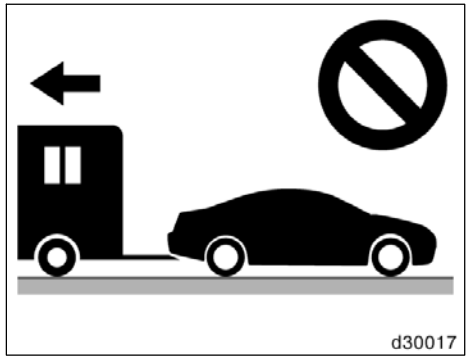

NOTICE
Do not tow your vehicle from the rear. This may cause serious damage to your vehicle.

Trailer towing

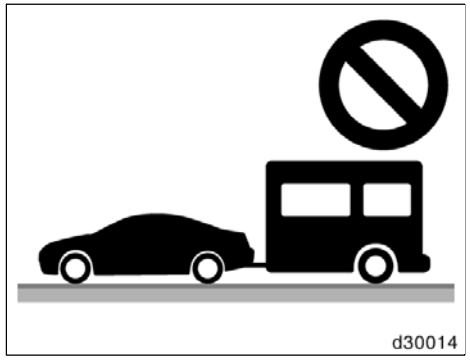

Toyota does not recommend towing a trailer with your Toyota. Toyota also does not recommend the installation of a tow hitch or the use of a tow hitch carrier for a wheelchair, scooter, bicycle, etc. Your Toyota is not designed for trailer towing or for the use of tow hitch mounted carriers.

How to save fuel and make your vehicle last longer

Improving fuel economy is easy—just take it easy. It will help make your vehicle last longer, too. Here are some specific tips on how to save money on both fuel and repairs:

- **Keep your tires inflated at the correct pressure.** Underinflation causes tire wear and wastes fuel. See page 349 in Section 7–2 for instructions.
- **Do not carry unneeded weight in your vehicle.** Excess weight puts a heavier load on the engine, causing greater fuel consumption.
- **Avoid lengthy warm–up idling.** Once the engine is running smoothly, begin driving—but gently. Remember, however, that on cold winter days this may take a little longer.
- **Put the selector lever into the “D” when engine brake is not required.** Driving without the “D” position will reduce the fuel economy. (For details, see “Automatic transmission” on page 146 in Section 1–7.)
- **Accelerate slowly and smoothly.** Avoid jackrabbit starts. Get into high gear as quickly as possible.
- **Avoid long engine idling.** If you have a long wait and you are not in traffic, it is better to turn off the engine and start again later.
- **Avoid engine lugging or over–revving.** Use a gear position suitable for the road on which you are traveling.
- **Avoid continuous speeding up and slowing down.** Stop–and–go driving wastes fuel.
- **Avoid unnecessary stopping and braking.** Maintain a steady pace. Try to time the traffic signals so you only need to stop as little as possible or take advantage of through streets to avoid traffic lights. Keep a proper distance from other vehicles to avoid sudden braking. This will also reduce wear on your brakes.
- **Avoid heavy traffic or traffic jams whenever possible.**
- **Do not rest your foot on the clutch or brake pedal.** This causes premature wear, overheating and poor fuel economy.
- **Maintain a moderate speed on highways.** The faster you drive, the greater the fuel consumption. By reducing your speed, you will cut down on fuel consumption.
- **Keep the front wheels in proper alignment.** Avoid hitting the curb and slow down on rough roads. Improper alignment not only causes faster tire wear but also puts an extra load on the engine, which, in turn, wastes fuel.
- **Keep the bottom of your vehicle free from mud, etc.** This not only lessens weight but also helps prevent corrosion.
- **Keep your vehicle tuned–up and in top shape.** A dirty air cleaner, improper valve clearance, dirty plugs, dirty oil and grease, brakes not adjusted, etc. all lower engine performance and contribute to poor fuel economy. For longer life of all parts and lower operating costs, keep all maintenance work on schedule, and if you often drive under severe conditions, see that your vehicle receives more frequent maintenance. (For scheduled maintenance information, please refer to the “Scheduled Maintenance Guide” or “Owner’s Manual Supplement”.)

⚠ CAUTION

Never turn off the engine to coast down hills. Your power steering and brake booster will not function without the engine running. Also, the emission control system operates properly only when the engine is running.

SECTION 4

IN CASE OF AN EMERGENCY

In case of an emergency

If your vehicle will not start 300
If your engine stalls while driving 303
If you cannot increase engine speed 304
If your vehicle overheats 304
If you have a flat tire 305
If your vehicle becomes stuck 315
If your vehicle needs to be towed 315
If you cannot shift automatic transmission selector lever 318
If the convertible top does not rise or lower 319
If you lose your keys 320
If you lose your wireless remote control transmitter 320

If your vehicle will not start—
(a) Simple checks

Before making these checks, make sure you have followed the correct starting procedure given in “How to start the engine” on page 290 in Section 3 and that you have sufficient fuel. Also, check whether the other keys will start the engine. If they work, your key may be broken. Have the key checked at your Toyota dealer. If none of your keys work, there may be a malfunction in the immobilizer system. Call your Toyota dealer. (See “Keys” on page 12 in Section 1–2.)

If the engine is not turning over or is turning over too slowly—

1. Check that the battery terminals are tight and clean.
2. If the battery terminals are O.K., switch on the interior light.
3. If the light is out, dim or goes out when the starter is cranked, the battery is discharged. You may try jump starting. See “(c) Jump starting” on page 301 for further instructions.

If the light is O.K., but the engine still will not start, it needs adjustment or repair. Call a Toyota dealer or qualified repair shop.

NOTICE

Do not pull– or push–start the vehicle. It may damage the vehicle or cause a collision when the engine starts. Also the three–way catalytic converter may overheat and become a fire hazard.

If the engine turns over at its normal speed but will not start—

1. Turn the engine switch to “ACC” or “LOCK” and try starting the engine again.
2. If the engine will not start, the engine may be flooded because of repeated cranking. See “(b) Starting a flooded engine” on page 300 for further instructions.
3. If the engine still will not start, it needs adjustment or repair. Call a Toyota dealer or qualified repair shop.

(b) Starting a flooded engine

If the engine will not start, your engine may be flooded because of repeated cranking.

If this happens, turn the engine switch to “START” with the accelerator pedal fully depressed. Keep the key and accelerator pedal in these positions for 15 seconds and release them. Then try starting the engine with your foot off the accelerator pedal.

If the engine does not start after 15 seconds of cranking, release the key, wait a few minutes and try again.

If the engine still will not start, it needs adjustment or repair. Call a Toyota dealer or qualified repair shop for assistance.

NOTICE

Do not crank for more than 30 seconds at a time. This may overheat the starter and wiring systems.

(c) Jump starting

To avoid serious personal injury and damage to your vehicle which might result from battery explosion, acid burns, electrical burns, or damaged electronic components, these instructions must be followed precisely.

If you are unsure about how to follow this procedure, we strongly recommend that you seek the help of a competent mechanic or towing service.

⚠ CAUTION

- **Batteries contain sulfuric acid which is poisonous and corrosive. Wear protective safety glasses when jump starting, and avoid spilling acid on your skin, clothing, or vehicle.**
- **If you should accidentally get acid on yourself or in your eyes, remove any contaminated clothing and flush the affected area with water immediately. Then get immediate medical attention. If possible, continue to apply water with a sponge or cloth while enroute to the medical office.**
- **The gas normally produced by a battery will explode if a flame or spark is brought near. Use only standardized jumper cables and do not smoke or light a match while jump starting.**

NOTICE

The battery used for boosting must be 12 V. Do not jump start unless you are sure that the booster battery is correct.

JUMP STARTING PROCEDURE

1. If the booster battery is installed in another vehicle, make sure the vehicles are not touching. Turn off all unnecessary lights and accessories.

   When boosting, use the battery of matching or higher quality. Any other battery may be difficult to jump start with.

   If jump starting is difficult, charge the battery for several minutes.
2. If required, remove all the vent plugs from the booster and discharged batteries. Lay a cloth over the open vents on the batteries. (This helps reduce the explosion hazard, personal injuries and burns.)
3. If the engine in the vehicle with the booster battery is not running, start it and let it run for a few minutes. During jump starting run the engine at about 2000 rpm with the accelerator pedal lightly depressed.

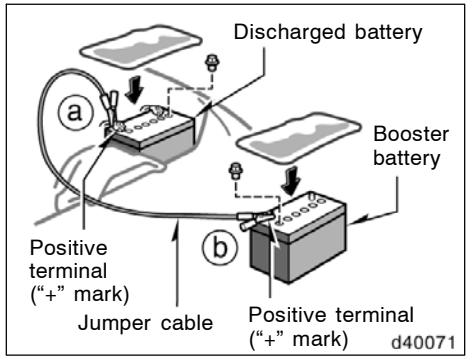

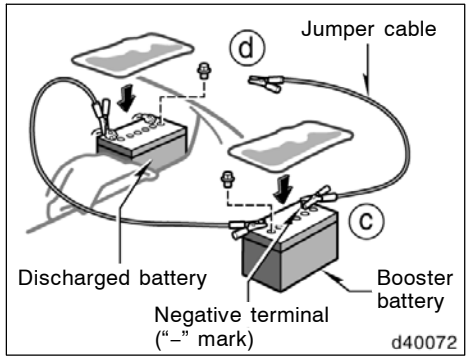

4. Make the cable connections in the order a, b, c, d.

   a. Connect the clamp of the positive (red) jumper cable to the positive (+) terminal on the discharged battery.

   b. Connect the clamp at the other end of the positive (red) jumper cable to the positive (+) terminal on the booster battery.

   c. Connect the clamp of the negative (black) jumper cable to the negative (–) terminal on the booster battery.

   d. Connect the clamp at the other end of the negative (black) jumper cable to a solid, stationary, unpainted, metallic point of the vehicle with the discharged battery.

   The recommended connecting points are shown in the following illustrations:

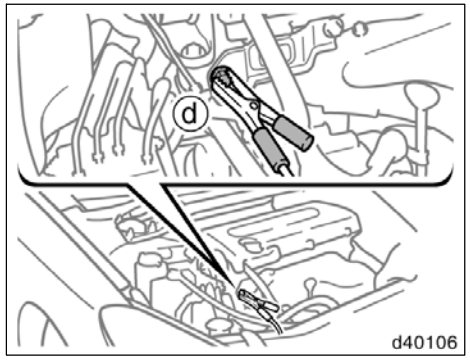

Connecting point for 2.4 L 4–cylinder (2AZ–FE) engine

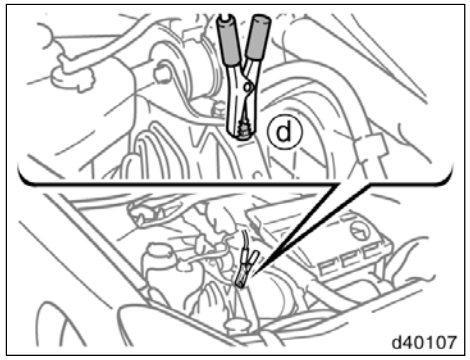

Connecting point for 3.3 L V6 (3MZ–FE) engine

Do not connect it to or near any part that moves when the engine is cranked.

⚠ CAUTION

When making the connections, to avoid serious injury, do not lean over the battery or accidentally let the jumper cables or clamps touch anything except the correct battery terminals or the ground.

5. Start your engine in the normal way. After starting, run it at about 2000 rpm for several minutes with the accelerator pedal lightly depressed.
6. Carefully disconnect the cables in the exact reverse order: the negative cable and then the positive cable.
7. Carefully dispose of the battery cover cloths—they may now contain sulfuric acid.
8. If removed, replace all the battery vent plugs.

If the cause of your battery discharging is not apparent (for example, lights left on), you should have it checked at your Toyota dealer.

If the first start attempt is not successful...

Check that the clamp on the jumper cables are tight. Recharge the discharged battery with the jumper cables connected for several minutes and restart your engine in the normal way.

If the another attempt is not successful, the battery may be depleted. Have it checked at your Toyota dealer.

If your engine stalls while driving

If your engine stalls while driving...

1. Reduce your speed gradually, keeping a straight line. Move cautiously off the road to a safe place.
2. Turn on your emergency flashers.
3. Turn the engine switch to “ACC” or “LOCK”, and try starting the engine again.

If the engine will not start, see “If your vehicle will not start” on page 300 in this Section.

⚠ CAUTION

If the engine is not running, the power assist for the brakes and steering will not work so steering and braking will be much harder than usual.

If you cannot increase engine speed

If engine speed does not increase when the accelerator pedal is depressed, there may be a problem somewhere in the electronic throttle control system.

At this time, vibration may occur. However, if you depress the accelerator pedal more firmly and slowly, you can drive your vehicle at low speeds. Have your vehicle checked by your Toyota dealer as soon as possible.

Even if the abnormality of the electronic throttle control system is corrected during low speed driving, the system may not be recovered until the engine is stopped and the engine switch is turned to “ACC” or “LOCK” position.

CAUTION

Be especially careful to prevent erroneous pedal operation.

If your vehicle overheats

If your engine coolant temperature gauge indicates overheating, if you experience a loss of power, or if you hear a loud knocking or pinging noise, the engine has probably overheated. You should follow this procedure...

1. Pull safely off the road, stop the vehicle and turn on your emergency flashers. Put the transmission in “P” (automatic) or neutral (manual) and apply the parking brake. Turn off the air conditioning if it is being used.
2. If coolant or steam is boiling out of the radiator or reservoir, stop the engine. Wait until the steam subsides before opening the hood. If there is no coolant boiling over or steam, leave the engine running and make sure the electric cooling fan is operating. If it is not, turn the ignition off.

CAUTION

To help avoid personal injury, keep the hood closed until there is no steam. Escaping steam or coolant is a sign of very high pressure.

3. Look for obvious coolant leaks from the radiator, hoses, and under the vehicle. However, note that water draining from the air conditioning is normal if it has been used.

CAUTION

When the engine is running, keep hands and clothing away from the moving fan and engine drive belts.

4. If the coolant is leaking, stop the engine immediately. Call a Toyota dealer for assistance.
5. If there are no obvious leaks, check the coolant reservoir. If it is dry, add coolant to the reservoir while the engine is running. Fill it about half full. For the coolant type, see “Coolant type selection” on page 347 in Section 7–2.

CAUTION

Do not attempt to remove the radiator cap when the engine and radiator are hot. Serious injury could result from scalding hot fluid and steam blown out under pressure.

6. After the engine coolant temperature has cooled to normal, again check the coolant level in the reservoir. If necessary, bring it up to half full again. Serious coolant loss indicates a leak in the system. You should have it checked as soon as possible at your Toyota dealer.

If you have a flat tire—

1. Reduce your speed gradually, keeping a straight line. Move cautiously off the road to a safe place well away from the traffic. Avoid stopping on the center divider of a highway. Park on a level spot with firm ground.
2. Stop the engine and turn on your emergency flashers.
3. Firmly set the parking brake and put the transmission in “P” (automatic) or reverse (manual).
4. Have everyone get out of the vehicle on the side away from traffic.
5. Read the following instructions thoroughly.

⚠ CAUTION

When jacking, be sure to observe the following to reduce the possibility of death or serious injury:

- **Follow jacking instructions.**
- **Do not put any part of your body under the vehicle supported by the jack. Otherwise, personal injury may occur.**
- **Do not start or run the engine while your vehicle is supported by the jack.**
- **Stop the vehicle on a level firm ground, firmly set the parking brake and put the transmission in “P” (automatic) or reverse (manual). Block the wheel diagonally opposite to the one being changed if necessary.**

- **Make sure to set the jack properly in the jack point. Raising the vehicle with jack improperly positioned will damage the vehicle or may allow the vehicle to fall off the jack and cause personal injury.**
- **Never get under the vehicle when the vehicle is supported by the jack alone.**
- **Use the jack only for lifting your vehicle during wheel changing.**
- **Do not raise the vehicle with someone in the vehicle.**
- **When raising the vehicle, do not place any objects on top of or underneath the jack.**
- **Raise the vehicle only high enough to remove and change the tire.**

NOTICE

Do not continue driving with a deflated tire. Driving even a short distance can damage a tire and wheel beyond repair.

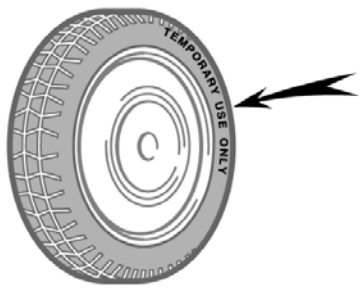

d40075

Compact spare tire (on some models)

The compact spare tire is designed for temporary emergency use only.

The compact spare tire is identified by the distinctive wording “TEMPORARY USE ONLY” molded into the side wall of the tire.

The compact spare tire saves space in your luggage compartment, and its lighter weight helps to improve fuel economy and permits easier installation in case of a flat tire.

The compact spare tire can be used many times, if necessary. It has tread life of up to 4800 km (3000 miles) depending on road conditions and your driving habits. When treadwear indicators appear on the tire, replace the tire.

See also the tire information on page 352 in Section 7–2 for details on the treadwear indicators and other service information.

⚠ CAUTION

- **The compact spare tire was designed especially for your Toyota. Do not use it on any other vehicle.**
- **Do not use more than one compact spare tire at the same time.**
- **The pressure for the compact spare tire must be 420 kPa (4.2 kgf/cm^2 or bar, 60 psi).**
- **Do not exceed 80 km/h (50 mph) when driving with the compact spare tire.**
- **Replace the compact spare tire with the standard tire as soon as possible.**
- **Avoid sudden acceleration, sudden deceleration and sharp turns with the compact spare tire.**

NOTICE

Your ground clearance is reduced when the compact spare tire is installed so avoid driving over obstacles and drive slowly on rough, unpaved roads and speed bumps. Also, do not attempt to go through an automatic car wash as the vehicle may get caught, resulting in damage.

—Required tools and spare tire

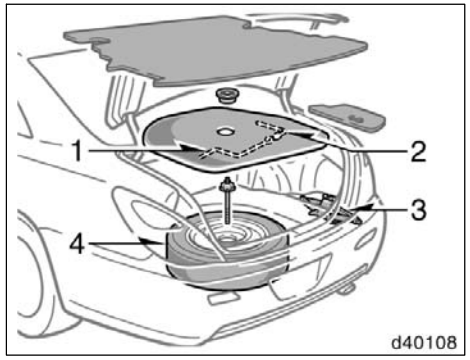

1. **Get the required tools and spare tire.**
   1. Jack handle
   2. Wheel nut wrench
   3. Jack
   4. Spare tire

To prepare yourself for an emergency, you should familiarize yourself with the use of the jack, each of the tools and their storage locations.

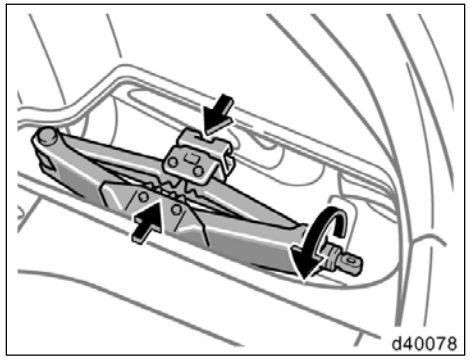

To remove the jack, turn the jack joint counterclockwise by hand until the jack becomes free.

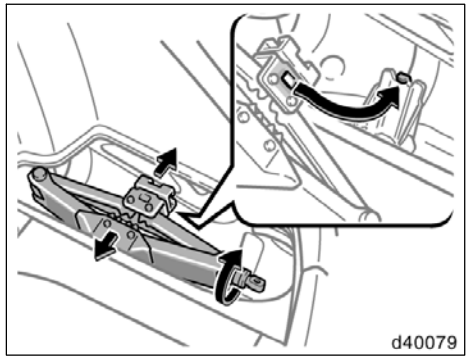

To store the jack, align the hole of the jack head with the vehicle hook. Turn the jack joint clockwise until the jack base fits securely with the vehicle body.

This prevents the jack from flying forward during a collision or sudden stop.

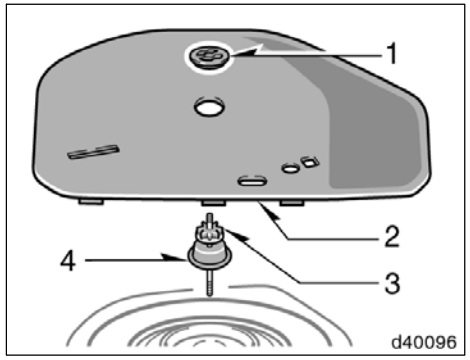

Type A

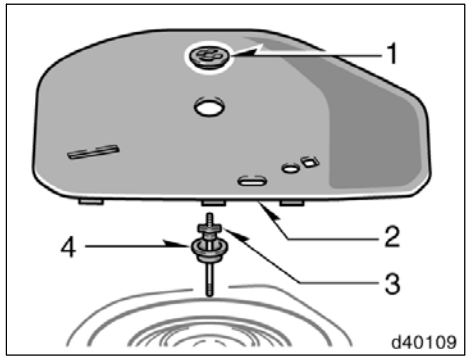

Type B

To remove the spare tire:

1. Loosen the nut and remove it.
2. Remove the spare tire cover.
3. Loosen the bolt and remove it.
4. Remove the spacer.

Then take the spare tire out of the vehicle.

When storing the spare tire, put it in place with the outer side of the wheel facing up. Then secure the tire by repeating the above removal steps in reverse order to prevent it from flying forward during a collision or sudden braking.

—Blocking the wheel

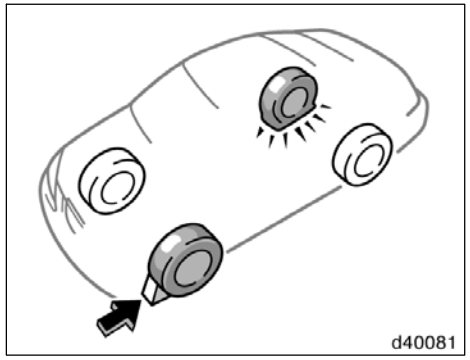

2. Block the wheel diagonally opposite the flat tire to keep the vehicle from rolling when it is jacked up.

When blocking the wheel, place a wheel block in front of one of the front wheels or behind one of the rear wheels.

—Removing wheel ornament (steel wheels)

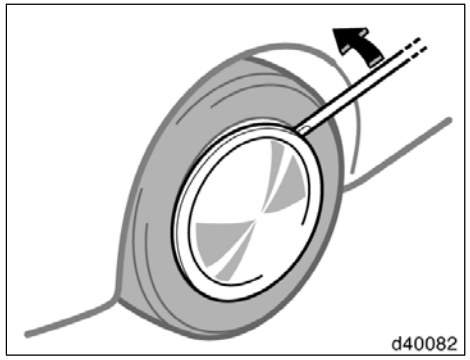

3. Remove the wheel ornament.

Pry off the wheel ornament, using the beveled end of the wheel nut wrench as shown.

⚠ CAUTION

Do not try to pull off the ornament by hand. Take due care in handling the ornament to avoid unexpected personal injury.

—Loosening wheel nuts

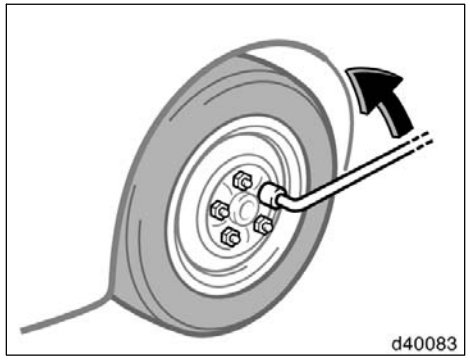

4. Loosen all the wheel nuts.

Always loosen the wheel nuts before raising the vehicle.

Turn the wheel nuts counterclockwise to loosen. To get maximum leverage, fit the wrench to the nut so that the handle is on the right side, as shown above. Grab the wrench near the end of the handle and pull up on the handle. Be careful that the wrench does not slip off the nut.

Do not remove the nuts yet—just unscrew them about one–half turn.

⚠ CAUTION

Never use oil or grease on the bolts or nuts. The nuts may loose and the wheels may fall off, which could cause a serious accident.

—Positioning the jack

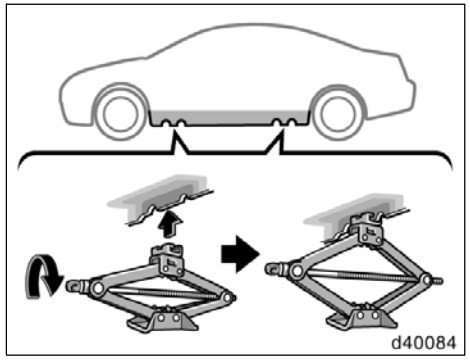

5. Position the jack at the correct jack point as shown. Rotate the load rest 90° from storage position to lifting position.

Make sure the jack is positioned on a level and solid place.

—Raising your vehicle

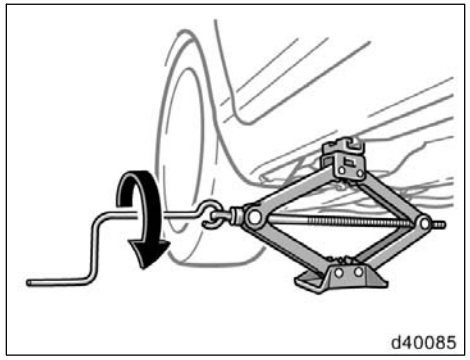

6. After making sure that no one is in the vehicle, raise it high enough so that the spare tire can be installed.

Remember you will need more ground clearance when putting on the spare tire than when removing the flat tire.

To raise the vehicle, insert the jack handle into the jack (it is a loose fit) and turn it clockwise. As the jack touches the vehicle and begins to lift, double–check that it is properly positioned.

⚠ CAUTION

Never get under the vehicle when the vehicle is supported by the jack alone.

—Changing wheels

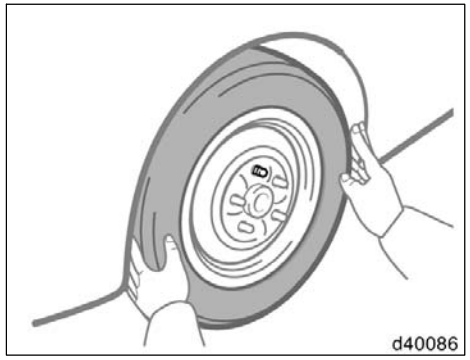

7. Remove the wheel nuts and change tires.

Lift the flat tire straight off and put it aside.

Roll the spare wheel into position and align the holes in the wheel with the bolts. Then lift up the wheel and get at least the top bolt started through its hole. Wiggle the tire and press it back over the other bolts.

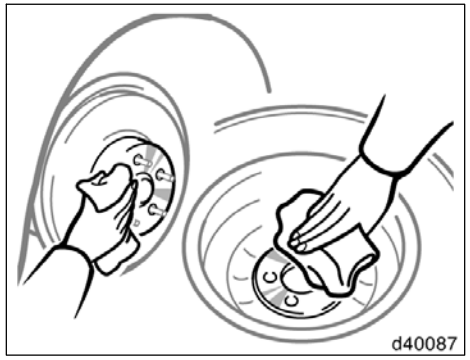

Before putting on wheels, remove any corrosion on the mounting surfaces with a wire brush or such. Installation of wheels without good metal–to–metal contact at the mounting surface can cause wheel nuts to loosen and eventually cause a wheel to come off while driving.

—Reinstalling wheel nuts

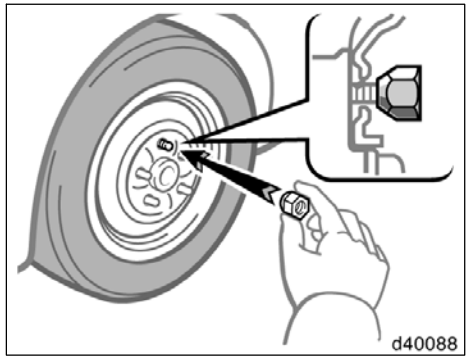

8. Reinstall all the wheel nuts finger tight.

Reinstall the wheel nuts (tapered end inward) and tighten them as much as you can by hand. Press back on the tire and see if you can tighten them more.

⚠ CAUTION

Never use oil or grease on the bolts or nuts. Doing so may lead to overtightening the nuts and damaging the bolts. The nuts may loose and the wheels may fall off, which could cause a serious accident. If there is oil or grease on any bolt or nut, clean it.

—Lowering your vehicle

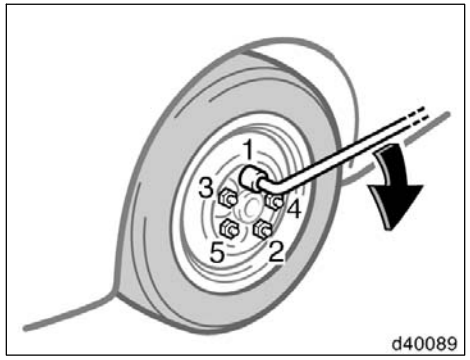

9. Lower the vehicle completely and tighten the wheel nuts.

Turn the jack handle counterclockwise to lower the vehicle.

Use only the wheel nut wrench to tighten the nuts. Do not use other tools or any additional leverage other than your hands, such as a hammer, pipe or your foot. Make sure the wrench is securely engaged over the nut.

Tighten each nut a little at a time in the order shown. Repeat the process until all the nuts are tight.

⚠ CAUTION

- **When lowering the vehicle, make sure all portions of your body and all other persons around will not be injured as the vehicle is lowered to the ground.**
- **Have the wheel nuts tightened with torque wrench to 103 N·m (10.5 kgf·m, 76 ft·lbf), as soon as possible after changing wheels. Otherwise, the nuts may loosen and the wheels may fall off, which could cause a serious accident.**
- **Do not attach a heavily damaged plastic wheel ornament. It may fly off the wheel and cause accidents while the vehicle is moving.**

—Reinstalling wheel ornament (steel wheels)

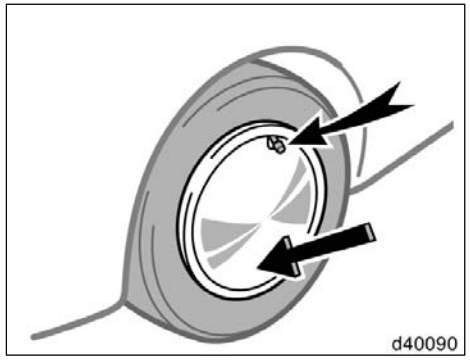

10. Reinstall the wheel ornament.

1. Put the wheel ornament into position.

Align the cutout of the wheel ornament with the valve stem as shown.

2. Press hand firmly on one side of wheel ornament and then firmly tap the other side around the edge of wheel ornament with the heel of your hand to snap into place.

⚠ CAUTION

Take due care in handling the ornament to avoid unexpected personal injury.

—After changing wheels

11. Check the air pressure of the replaced tire.

Adjust the air pressure to the specification designed on page 377 in Section 8. If the pressure is lower, drive slowly to the nearest service station and fill to the correct pressure.

Do not forget to reinstall the tire inflation valve cap as dirt and moisture could get into the valve core and possibly cause air leakage. If the cap is missing, have a new one put on as soon as possible.

12. Restow all the tools, jack and flat tire securely.

As soon after changing wheels as possible, tighten the wheel nuts to the torque specified on page 377 in Section 8 with a torque wrench. Have a technician repair the flat tire and replace the spare tire with it.

Initial adjustment of the tire pressure warning system is necessary after you have replaced your tires or wheels. See “Tire pressure warning system” on page 155 in Section 1–7.

⚠ CAUTION

Before driving, make sure all the tools, jack and flat tire are securely in place in their storage location to reduce the possibility of personal injury during a collision or sudden braking.

If your vehicle becomes stuck

If your vehicle becomes stuck in snow, mud, sand, etc., then you may attempt to rock the vehicle free by moving it forward and backward.

Vehicles with traction control system— Turn off the traction control system to become unstuck to allow the tires to spin enough to remove the vehicle from the obstruction. (For details, see “Traction control system” on page 151 in Section 1–7.)

⚠ CAUTION

Do not attempt to rock the vehicle free by moving it forward and backward if people or objects are anywhere near the vehicle. During the rocking operation the vehicle may suddenly move forward or backward as it becomes unstuck, causing injury or damage to nearby people or objects.

NOTICE

If you rock your vehicle, observe the following precautions to prevent damage to the transmission and other parts.

- ***Do not depress the accelerator pedal while shifting the selector lever or before the transmission is completely shifted to forward or reverse gear.***
- ***Do not race the engine and avoid spinning the wheels.***
- ***If your vehicle remains stuck after rocking the vehicle several times, consider other ways such as towing.***

If your vehicle needs to be towed—

(a) Towing with wheel lift type truck—

—From front

—From rear

(b) Using flat bed truck

d40091

If towing is necessary, we recommend you to have it done by your Toyota dealer or a commercial tow truck service. In consultation with them, have your vehicle towed using either (a) or (b).

Manual transmission models with towing eyelet—Only when you cannot receive a towing service from a Toyota dealer or commercial tow truck service, tow your vehicle carefully in accordance with the instructions given in “—Emergency towing” on page 317 in this Section.

Proper equipment will help ensure that your vehicle is not damaged while being towed. Commercial operators are generally aware of the state/provincial and local laws pertaining to towing.

Your vehicle can be damaged if it is towed incorrectly. Although most operators know the correct procedure, it is possible to make a mistake. To avoid damage to your vehicle, make sure the following precautions are observed. If necessary, show this page to the tow truck driver.

TOWING PRECAUTIONS:

Use a safety chain system for all towing, and abide by the state/provincial and local laws. The wheels and axle on the ground must be in good condition. If they are damaged, use a towing dolly.

(a) Towing with wheel lift type truck

NOTICE

When lifting wheels, take care to ensure adequate ground clearance for towing at the opposite end of the raised vehicle. Otherwise, the bumper and/or underbody of the towed vehicle will be damaged during towing.

From front—Release the parking brake.

From rear—

- Manual transmission:

  We recommend using a towing dolly under the front wheels. If you do not use a towing dolly, place the engine switch in the “ACC” position and put the transmission in neutral.

NOTICE

Do not tow with the key removed or the engine switch is turned to “LOCK” position when towing from the rear without a towing dolly. The steering lock mechanism is not strong enough to hold the front wheels straight.

- Automatic transmission:

  Use a towing dolly under the front wheels.

NOTICE

Never tow a vehicle with an automatic transmission from the rear with the front wheels on the ground, as this may cause serious damage to the transmission.

(b) Using flat bed truck

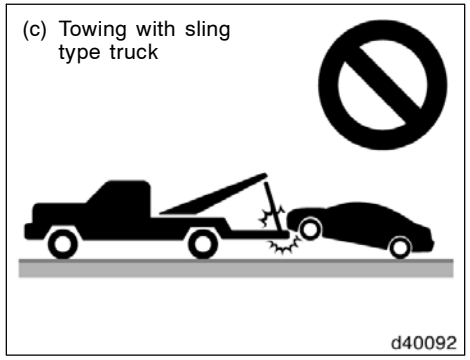

(c) Towing with sling type truck

NOTICE

Do not tow with sling type truck, either from the front or rear. This may cause body damage.

—Emergency towing

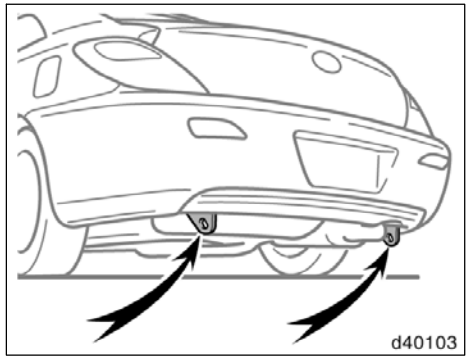

Towing eyelet (on some models)

If towing is necessary, we recommend you to have it done by your Toyota dealer or a commercial tow truck service.

Manual transmission models with towing eyelet—

If towing service is not available in an emergency, your vehicle may be temporarily towed by a cable or chain secured to one of the emergency towing eyelets under the vehicle. Use extreme caution when towing vehicles.

NOTICE

- ***Only use specified towing eyelet; otherwise your vehicle may be damaged.***
- ***Vehicles with an automatic transmission, never tow a vehicle from the rear with four wheels on the ground. This may cause serious damage to the transmission.***

A driver must be in the vehicle to steer it and operate the brakes.

Towing in this manner may be done only on hard–surfaced roads for a short distance and at low speeds. Also, the wheels, axles, drive train, steering and brakes must all be in good condition.

⚠ CAUTION

Use extreme caution when towing vehicles. Avoid sudden starts or erratic driving maneuvers which would place excessive stress on the emergency towing eyelets and towing cable or chain. The eyelets and towing cable or chain may break and cause serious injury or damage.

NOTICE

Use only a cable or chain specifically intended for use in towing vehicles. Securely fasten the cable or chain to the towing eyelets provided.

Before towing, release the parking brake and put the transmission in neutral. The engine switch must be in “ACC” (engine off) or “ON” (engine running).

⚠ CAUTION

If the engine is not running, the power assist for the brakes and steering will not work so steering and braking will be much harder than usual.

If you cannot shift automatic transmission selector lever

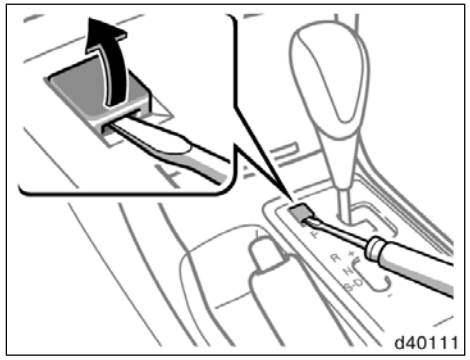

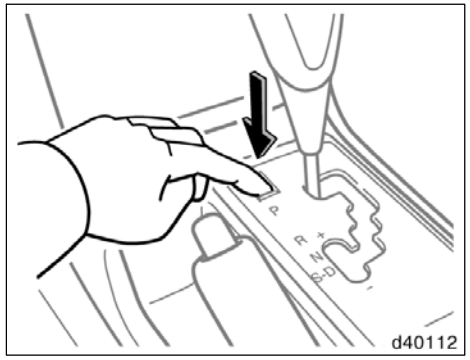

If you cannot shift the selector lever out of “P” position to other positions even though the brake pedal is depressed, use the shift lock override button as follows:

1. **Turn the engine switch to “LOCK” position. Make sure the parking brake is on.**
2. **Pry up the cover with a flathead screwdriver or equivalent.**
3. **Insert your finger into the hole to push down the shift lock override button. You can shift out of “P” position only while pushing the button.**
4. **Shift into “N” position.**
5. **Insert the cover.**
6. **Start the engine. For your safety, keep the brake pedal depressed.**

Be sure to have the system checked by your Toyota dealer as soon as possible.

If the convertible top does not rise or lower

If the convertible top does not rise or lower during convertible top control switch operation, have your vehicle checked at your Toyota dealer.

If raising the convertible top manually is unavoidable, see “RAISING THE CONVERTIBLE TOP MANUALLY”. Then you should have it checked as soon as possible at your Toyota dealer.

NOTICE
Do not lower the convertible top manually. It may cause damage to the system.

RAISING THE CONVERTIBLE TOP MANUALLY

1. **Lower the side windows, quarter windows and sun visors.**

If the battery is discharged and the windows cannot be lowered, open both doors.

2. **Turn the engine switch to the “ACC” or “LOCK” position. Open either door or wait for 43 seconds before raising the convertible top manually.**

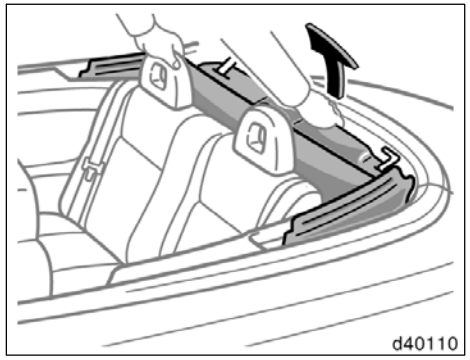

3. **From the rear seat, place one hand on top of the rear seat head restraint. With the other hand, grasp the edge of the convertible top at the center and slowly raise the top halfway.**

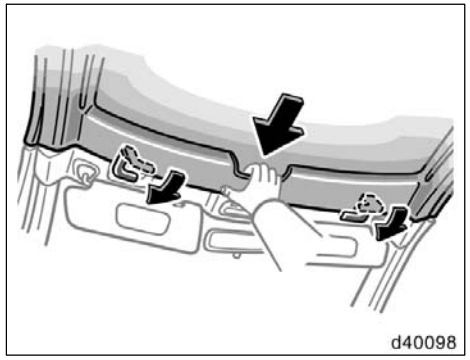

4. **Move to the front seat, and grasp the handle underneath the convertible top. Pull the top forward. Holding the convertible top against the windshield frame, push the latch handles fully forward until they are hooked.**

Visually check that the latch handles are fully seated in the strikers. Also, pull on the convertible top side rails to make sure the top is securely hooked.

If you lose your keys

You can purchase a new key at your Toyota dealer if you can give them the key number. If your vehicle is equipped with the engine immobilizer system, the dealer will also need your master key.

Even if you lose only one key, contact your Toyota dealer to make a new key. If you lose all your master keys, you cannot make new keys; the whole engine immobilizer system must be replaced.

See the suggestion given in “Keys” on page 12 in Section 1–2.

If your keys are locked in the vehicle and you cannot get a duplicate, many Toyota dealers can still open the door for you, using their special tools. If you must break a window to get in, we suggest breaking the smallest side window because it is the least expensive to replace. Be extremely cautious to avoid cuts from the glass.

If you lose your wireless remote control transmitter

You can purchase a new wireless remote control transmitter at your Toyota dealer.

Have the registered identification numbers of your transmitters deleted from your vehicle by your Toyota dealer as soon as possible to avoid the possibility of theft or an accident. Then, have the identification number of your new transmitter registered. At the same time, you must bring all of the remaining transmitters to have them registered again as well.

You can use the wireless remote control system with the new transmitter. Contact your Toyota dealer for detailed information.

SECTION 5

CORROSION PREVENTION AND APPEARANCE CARE

Corrosion prevention and appearance care

Protecting your Toyota from corrosion 322
Washing and waxing your Toyota 323
Cleaning the interior 327

Protecting your Toyota from corrosion

Toyota, through diligent research, design and use of the most advanced technology available, helps prevent corrosion and provides you with the finest quality vehicle construction. Now, it is up to you. Proper care of your Toyota can help ensure long–term corrosion prevention.

The most common causes of corrosion to your vehicle are:

- The accumulation of road salt, dirt and moisture in hard–to–reach areas under the vehicle.
- Chipping of paint, or undercoating caused by minor accidents or by stones and gravel.

Care is especially important if you live in particular areas or operate your vehicle under certain environmental conditions:

- Road salt or dust control chemicals will accelerate corrosion, as will the presence of salt in the air near the sea–coast or in areas of industrial pollution.
- High humidity accelerates corrosion especially when temperatures range just above the freezing point.
- Wetness or dampness to certain parts of your vehicle for an extended period of time, may cause corrosion even though other parts of the vehicle may be dry.
- High ambient temperatures can cause corrosion to those components of the vehicle which do not dry quickly due to lack of proper ventilation.

The above signifies the necessity to keep your vehicle, particularly the underside, as clean as possible and to repair any damage to paint or protective coatings as soon as possible.

To help prevent corrosion on your Toyota, follow these guidelines:

Wash your vehicle frequently. It is, of course, necessary to keep your vehicle clean by regular washing, but to prevent corrosion, the following points should be observed:

- If you drive on salted roads in the winter or if you live near the ocean, you should hose off the undercarriage at least once a month to minimize corrosion.
- High pressure water or steam is effective for cleaning the vehicle’s underside and wheel housings. Pay particular attention to these areas as it is difficult to see all the mud and dirt. It will do more harm than good to simply wet the mud and debris without removing. The lower edge of doors, rocker panels and frame members have drain holes which should not be allowed to clog with dirt as trapped water in these areas can cause corrosion.
- Wash the underside of the vehicle thoroughly when winter is over.

See “Washing and waxing your Toyota” on page 323 for more tips.

Check the condition of your vehicle’s paint and trim. If you find any chips or scratches in the paint, touch them up immediately to prevent corrosion from starting. If the chips or scratches have gone through the bare metal, have a qualified body shop make the repair.

Check the interior of your vehicle. Water and dirt can accumulate under the floor mats and could cause corrosion. Occasionally check under the mats to make sure the area is dry. Be particularly careful when transporting chemicals, cleansers, fertilizers, salt, etc.; these should be transported in proper containers. If a spill or leak should occur, immediately clean and dry the area.

Use mud shields on your wheels. If you drive on salted or gravel roads, mud shields help protect your vehicle. Full–size shields, which come as near to the ground as possible, are the best. We recommend that the fittings and the area where the shields are installed be treated to resist corrosion. Your Toyota dealer will be happy to assist in supplying and installing the shields if they are recommended for your area.

Keep your vehicle in a well ventilated garage or a roofed place. Do not park your vehicle in a damp, poorly ventilated garage. If you wash your vehicle in the garage, or if you drive it covered with water or snow, your garage may be so damp as to cause corrosion. Even if your garage is heated, a wet vehicle can corrode if the ventilation is poor.

Washing and waxing your Toyota

Washing your Toyota

Keep your vehicle clean by regular washing.

The following cases may cause weakness to the paint or corrosion to the body and parts. Wash your vehicle as soon as possible.

- When driving in a coastal area
- When driving on a road sprinkled with antifreeze
- When exposed to coal tar, tree sap, bird droppings and carcass of an insect
- When driving in areas where there is a lot of smoke, soot, dust, iron dust or chemical substances
- When the vehicle becomes remarkably dirty with dust and mud

Hand–washing your Toyota

Work in the shade and wait until the vehicle body is not warm to the touch.

⚠ CAUTION

- **When cleaning under floor or chassis, be careful not to injure your hands.**
- **Exhaust gases cause the exhaust pipe to become quite hot. When washing the vehicle, be careful not to touch the pipe until it has cooled sufficiently, as touching a hot exhaust pipe can cause burns.**

Convertible—For washing instructions for the convertible top, see “Washing convertible top” on page 326 in this Section.

1. Rinse off loose dirt with a hose. Remove any mud or road salt from the underside of the vehicle or the wheel wells.

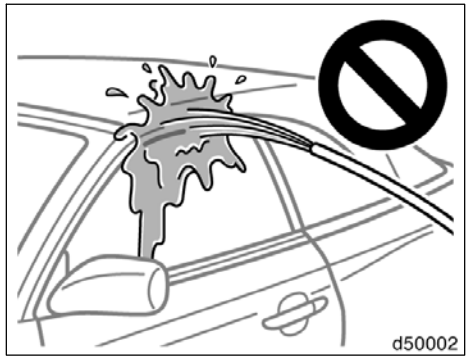

Convertible—Spray water on the side windows or top seals from above, at a 45° angle to the ground.

NOTICE

Convertible—Do not spray water at side windows and top seals in a way which may cause water to enter the vehicle.

2. Wash with a mild car–wash soap, mixed according to the manufacturer’s instructions. Use a soft cotton mitt and keep it wet by dipping it frequently into the wash water. Do not rub hard—let the soap and water remove the dirt.

Fuel filler door: Do not apply water (high–pressure car wash, for example) at or near the fuel tank inlet with the fuel filler door opened. If the water enters the air vent, you may experience trouble with refueling or rough engine idling.

Plastic wheel ornaments: The plastic wheel ornaments are damaged easily by organic substances. If any organic substances splash an ornament, be sure to wash them off with water and check if the ornament is damaged.

Aluminum wheels: Use only a mild soap or neutral detergent.

NOTICE

- ***Do not use corrosive chemical–based cleaners on your wheels. (Example: hydrofluoric acid)***
- ***Do not use steam cleaners or the chemicals therein to clean your wheels.***
- ***Do not use scouring pads, wire brushes, or coarse abrasives to clean your wheels.***
- ***Do not use alcohol, solvents, gasoline, or other non–neutral detergents, because they may alter the wheel’s appearance and resistance to corrosion.***

Plastic bumpers: Wash carefully. Do not scrub with abrasive cleaners. The bumper faces are soft.

Exterior lights: Wash carefully. Do not use organic substances or scrub them with a hard brush. This may damage the surfaces of the lights.

Road tar: Remove with turpentine or cleaners that are marked safe for painted surfaces.

3. Rinse thoroughly—dried soap can cause streaking. In hot weather you may need to rinse each section right after you wash it.
4. To prevent water spots, dry the vehicle using a clean soft cotton towel. Do not rub or press hard—you might scratch the paint.

NOTICE

- ***Do not use organic substances (gasoline, kerosene, benzine or strong solvents), which may be toxic or cause damage.***
- ***Do not scrub any part of the vehicle with a hard brush, which may cause damage.***

Automatic car wash

Coupe—Your vehicle may be washed in an automatic car wash, but remember that the paint can be scratched by some types of brushes, unfiltered washing water, or the washing process itself. Scratching reduces paint durability and gloss, especially on darker colors. The manager of the car wash should be able to advise you whether the process is safe for the paint on your vehicle.

NOTICE

Convertible—Do not run convertible through automatic car washes or possible damage to the convertible top may result.

Waxing your Toyota

Polishing and waxing is recommended to maintain the original beauty of your Toyota’s finish.

Apply wax once a month or if the vehicle surface does not repel water well.

1. Always wash and dry the vehicle before you begin waxing, even if you are using a combined cleaner and wax.
2. Use a good quality polish and wax. If the finish has become extremely weathered, use a car–cleaning polish, followed by a separate wax. Carefully follow the manufacturer’s instructions and precautions. Be sure to polish and wax the chrome trim as well as the paint.

Windshield washer nozzles: Make sure that the nozzles do not become blocked when waxing. If a nozzle becomes blocked, contact your Toyota dealer to have the vehicle serviced.

NOTICE

If a nozzle becomes blocked, do not try to clear it with a pin or other object. The nozzle will be damaged.

Exterior lights: Do not apply wax on the surfaces of the lights. Wax may cause damage to the lenses. If you accidentally put wax on the light surfaces, wipe or wash it off.

3. Wax the vehicle again when water does not bead but remains on the surface in large patches.

Washing convertible top

General cleaning—

Follow the procedure shown below.

1. Brush off any loose dirt and rinse off with a hose.
2. Using a sponge, wash with a mild solution of soap (hand soap) in lukewarm water (below 38°C or 100°F).
3. Rinse thoroughly to remove soap.

NOTICE

- ***Do not use harsh or abrasive cleaners as they may damage the top material.***
- ***Do not use water–repellents, wax or other preservative finishes as they may stain the top material.***

Additional cleaning (for more difficult stains)—

Follow the procedure shown below using a mild cleaning solution composed of the following ingredient.

- 110 g (4 oz.) of chlorine bleach
- 60 g (2 oz.) of soap (hand soap)
- 3.8 L (1.0 gal., 0.8 Imp. gal.) of lukewarm water (below 38°C or 100°F)

1. Rinse the top, then spread the mild cleaning solution on the entire top. Do not put excessive amounts of liquid on the fabric.
2. Scrub with a small, soft bristle hand–brush. Add water as needed until the cleaner becomes soapy. Allow solution to settle for two to five minutes. Use a cloth or sponge to remove dirt so it will not be ground into the top. Be careful not to allow any cleaner to dry on the body paint as it may cause streaks.
3. Rinse thoroughly.

If any dirt is left, repeat the procedure.

After the top has been cleaned, rinse the vehicle with clean water to remove all the cleaner.

After cleaning, always make sure the top is completely dry before you lower it. Lowering the top while wet or damp may cause interior water damage, water stains or mildew of the top material.

Cleaning the interior

CAUTION

- **Vehicles with side airbags and curtain shield airbags:**

  Be careful not to splash water or spill liquid on the floor. This may prevent the side airbags from activating correctly, resulting in death or serious injury.
- **Do not wash the vehicle floor with water, or allow water to get onto the floor when cleaning the vehicle interior or exterior. Water may get into audio components or other electrical components above or under the floor carpet (or mat) and cause a malfunction; and it may cause body corrosion.**

Vinyl interior

The vinyl upholstery may be easily cleaned with a mild soap or detergent and water.

First vacuum over the upholstery to remove loose dirt. Then, using a sponge or soft cloth, apply the soap solution to the vinyl. After allowing it to soak in for a few minutes to loosen the dirt, remove the dirt and wipe off the soap with a clean damp cloth. If all the dirt do not come off, repeat the procedure. Commercial foaming–type vinyl cleaners are also available which work well. Follow the manufacturer’s instructions.

NOTICE

Do not use solvent, thinner, gasoline or window cleaner on the interior.

Carpets

Use a good foam–type shampoo to clean the carpets.

Begin by vacuuming thoroughly to remove as much dirt as possible. Several types of foam cleaners are available; some are in aerosol cans and others are powders or liquids which you mix with water to produce a foam. To shampoo the carpets, use a sponge or brush to apply the foam. Rub in overlapping circles.

Do not apply water—the best results are obtained by keeping the carpet as dry as possible. Read the shampoo instructions and follow them closely.

Seat belts

The seat belts may be cleaned with mild soap and water or with lukewarm water.

Use a cloth or sponge. As you are cleaning, check the belts for excessive wear, fraying, or cuts.

NOTICE

- ***Do not use dye or bleach on the belts—it may weaken them.***
- ***Do not use the belts until they become dry.***

Windows

The windows may be cleaned with any household window cleaner.

NOTICE

When cleaning the inside of the rear window, be careful not to scratch or damage the heater wires or connectors.

Air conditioning control panel, audio panel, instrument panel, console panel and switches

Use a soft damp cloth for cleaning.

Soak a clean soft cloth in water or lukewarm water then lightly wipe off dirt.

NOTICE

- ***Do not use organic substances (solvents, kerosene, alcohol, gasoline, etc.) or alkaline or acidic solutions. These chemicals can cause discoloring, staining or peeling of the surface.***
- ***If you use cleaners or polishing agents, make sure their ingredients do not include the substances mentioned above.***
- ***If you use a liquid car freshener, do not spill the liquid onto the vehicle’s interior surfaces. It may contain the ingredients mentioned above. Immediately clean any spill using the method mentioned above.***

Leather interior

The leather upholstery may be cleaned with neutral detergent for wool.

Remove dirt using a soft cloth dampened with 5% solution of neutral detergent for wool. Then thoroughly wipe off all traces of detergent with a clean damp cloth.

After cleaning or whenever any part of the leather gets wet, dry with a soft clean cloth. Allow the leather to dry in a ventilated shaded area.

NOTICE

- ***If a stain should fail to come out with a neutral detergent, apply a cleaner that does not contain an organic solvent.***
- ***Never use organic substances such as benzine, alcohol or gasoline, or alkaline or acid solutions for cleaning the leather as these could cause discoloring.***
- ***Use of a nylon brush or synthetic fiber cloth, etc. may scratch the fine grained surface of the leather.***
- ***Mildew may develop on soiled leather upholstery. Be especially careful to avoid oil spots. Try to keep your upholstery always clean.***
- ***Long exposure to direct sunlight may cause the leather surface to harden and shrink. Keep your vehicle in a shaded area, especially in the summer.***
- ***The interior of your vehicle is apt to heat up on hot summer days, so avoid placing on the upholstery items made of vinyl or plastic or containing wax as these tend to stick to leather when warm.***
- ***Improper cleaning of the leather upholstery could result in discoloration or staining.***

If you have any questions about the cleaning of your Toyota, your local Toyota dealer will be pleased to answer them.

SECTION 6

VEHICLE MAINTENANCE AND CARE

Vehicle maintenance and care

Maintenance requirements 330
General maintenance 331
Does your vehicle need repairing? 333
Emissions Inspection and Maintenance (I/M) programs 334

For scheduled maintenance information, please refer to the “Scheduled Maintenance Guide” or “Owner’s Manual Supplement”.

Maintenance requirements

Your Toyota vehicle has been designed for fewer maintenance requirements with longer service intervals to save both your time and money. However, each regular maintenance, as well as day–to–day care, is more important than ever before to ensure smooth, trouble–free, safe, and economical driving.

It is the owner’s responsibility to make sure the specified maintenance, including general maintenance service, is performed. Note that both the new vehicle and emission control system warranties specify that proper maintenance and care must be performed. See “Owner’s Warranty Information Booklet” or “Owner’s Manual Supplement” for complete warranty information.

General maintenance

General maintenance items are those day–to–day care practices that are important to your vehicle for proper operation. It is the owner’s responsibility to insure that the general maintenance items are performed regularly.

These checks or inspections can be done either by yourself or a qualified technician, or if you prefer, your Toyota dealer will be pleased to do them at a nominal cost.

Scheduled maintenance

The scheduled maintenance items listed in the “Scheduled Maintenance Guide” or “Owner’s Manual Supplement” are those required to be serviced at regular intervals.

For details of your maintenance schedule, read the “Scheduled Maintenance Guide” or “Owner’s Manual Supplement”.

It is recommended that any replacement parts used for maintenance or for the repair of the emission control system be Toyota supplied.

The owner may elect to use non–Toyota supplied parts for replacement purposes without invalidating the emission control system warranty. However, use of replacement parts which are not of equivalent quality may impair the effectiveness of the emission control systems.

You may also elect to have maintenance, replacement, or repair of the emission control devices and system performed by any automotive repair establishment or individual without invalidating this warranty. See “Owner’s Warranty Information Booklet” or “Owner’s Manual Supplement” for complete warranty information.

Where to go for service?

Toyota technicians are well–trained specialists and are kept up to date with the latest service information through technical bulletins, service tips, and in–dealership training programs. They learn to work on Toyotas before they work on your vehicle, rather than while they are working on it.

You can be confident that your Toyota dealer’s service department performs the best job to meet the maintenance requirements on your vehicle—reliably and economically.

Your copy of the repair order is proof that all required maintenance has been performed for warranty coverage. If any problems should arise with your vehicle while under warranty, your Toyota dealer will promptly take care of it. Again, be sure to keep a copy of the repair order for any service performed on your Toyota.

What about do–it–yourself maintenance?

Many of the maintenance items are easy to do yourself if you have a little mechanical ability and a few basic automotive tools. Simple instructions for how to perform them are presented on page 335 in Section 7.

If you are a skilled do–it–yourself mechanic, the Toyota service manuals are recommended. Please be aware that do–it–yourself maintenance can affect your warranty coverage. See “Owner’s Warranty Information Booklet” or “Owner’s Manual Supplement” for the details.

General maintenance

Listed below are the general maintenance items that should be performed as frequently as specified. In addition to checking the items listed, if you notice any unusual noise, smell or vibration, you should investigate the cause or take your vehicle to your Toyota dealer or a qualified service shop immediately. It is recommended that any problem you notice be brought to the attention of your dealer or the qualified service shop for their advice.

⚠ CAUTION

Make these checks only with adequate ventilation if you run the engine.

IN THE ENGINE COMPARTMENT

Items listed below should be checked from time to time, e.g. each time when refueling.

Washer fluid
Make sure there is sufficient fluid in the tank. See page 363 in Section 7–3 for additional information.

Engine coolant level
Make sure the coolant level is between the “F” and “L” lines on the see–through reservoir when the engine is cold. See page 346 in Section 7–2 for additional information.

Radiator, condenser and hoses
Check that the front of the radiator and condenser are clean and not blocked with leaves, dirt, or insects. See page 347 in Section 7–2 for additional information.

Battery condition
Check the battery condition by the indicator color. See page 360 in Section 7–3 for additional information.

Brake fluid level
Make sure the brake fluid level is correct. See page 348 in Section 7–2 for additional information.

Engine oil level
Check the level on the dipstick with the engine turned off and the vehicle parked on a level spot. See page 344 in Section 7–2 for additional information.

Power steering fluid level
Check the level through the reservoir. The level should be in the “HOT” or “COLD” range depending on the fluid temperature. See page 348 in Section 7–2 for additional information.

Exhaust system
If you notice any change in the sound of the exhaust or smell exhaust fumes, have the cause located and corrected immediately. (See “Engine exhaust cautions” on page 262 in Section 2.)

INSIDE THE VEHICLE

Items listed below should be checked regularly, e.g. while performing periodic services, cleaning the vehicle, etc.

Lights
Make sure the headlights, stop lights, tail lights, turn signal lights, and other lights are all working. Check headlight aim.

Service reminder indicators and warning buzzers
Check that all service reminder indicators and warning buzzers function properly.

Steering wheel
Be alert for changes in steering condition, such as hard steering or strange noise.

Seats
Check that all front seat controls such as seat adjusters, seatback recliner, etc. operate smoothly and that all latches lock securely in any position. Check that the head restraints move up and down smoothly and that the locks hold securely in any latched position. For folding–down rear seatbacks, check that the latches lock securely.

Seat belts
Check that the seat belt system such as buckles, retractors and anchors operate properly and smoothly. Make sure that the belt webbings not cut, frayed, worn or damaged.

Accelerator pedal
Check the pedal for smooth operation and uneven pedal effort or catching.

Clutch pedal
Check the pedal for smooth operation.

Brake pedal
Check the pedal for smooth operation and that the pedal has the proper clearance. Check the brake booster function.

Brakes
In a safe place, check that the brakes do not pull to one side when applied.

Parking brake
Check that the lever has the proper travel and that, on a safe incline, your vehicle is held securely with only the parking brake applied.

Automatic transmission “Park” mechanism
Check the lock release button of the selector lever for proper and smooth operation. On a safe incline, check that your vehicle is held securely with the selector lever in “P” position and all brakes released.

OUTSIDE THE VEHICLE

Items listed below should be performed from time to time, unless otherwise specified.

Fluid leaks
Check underneath for leaking fuel, oil, water or other fluid after the vehicle has been parked for a while. If you smell fuel fumes or notice any leak, have the cause found and corrected immediately.

Doors and engine hood
Check that all doors including trunk lid operate smoothly and all latches lock securely. Make sure the engine hood secondary latch secures the hood from opening when the primary latch is released.

Tire inflation pressure
Check the pressure with a gauge every two weeks, or at least once a month. See page 349 in Section 7–2 for additional information.

Tire surface and wheel nuts
Check the tires carefully for cuts, damage or excessive wear. See page 352 in Section 7–2 for additional information. When checking the tires, make sure no nuts are missing, and check the nuts for looseness. Tighten them if necessary.

Tire rotation
Rotate the tires according to the maintenance schedule. (For scheduled maintenance information, please refer to the “Scheduled Maintenance Guide” or “Owner’s Manual Supplement”.) See page 354 in Section 7–2 for additional information.

Does your vehicle need repairing?

Be on the alert for changes in performance, sounds, and visual tip–offs that indicate service is needed. Some important clues are as follows:

- Engine missing, stumbling, or pinging
- Appreciable loss of power
- Strange engine noises
- A leak under the vehicle (however, water dripping from the air conditioning after use is normal.)
- Change in exhaust sound (This may indicate a dangerous carbon monoxide leak. Drive with the windows open and have the exhaust system checked immediately.)
- Flat–looking tire; excessive tire squeal when cornering; uneven tire wear
- Vehicle pulls to one side when driving straight on a level road
- Strange noises related to suspension movement
- Loss of brake effectiveness; spongy feeling brake or clutch pedal; pedal almost touches floor; vehicle pulls to one side when braking
- Engine coolant temperature continually higher than normal

If you notice any of these clues, take your vehicle to your Toyota dealer as soon as possible. It probably needs adjustment or repair.

⚠ CAUTION

Do not continue driving with the vehicle unchecked. It could result in serious vehicle damage and possibly personal injury.

Emissions Inspection and Maintenance (I/M) programs

Some states have vehicle emission inspection programs which include OBD (On–Board Diagnostics) checks.

The OBD system monitors the operation of the emission control system. When the OBD system determines that a problem exists somewhere in the emission control system, the malfunction indicator lamp comes on. In this case, your vehicle may not pass the I/M test and need to be repaired. Contact your Toyota dealer to service the vehicle.

Even if the malfunction indicator lamp does not come on, your vehicle may not pass the I/M test as readiness codes have not been set in the OBD system.

Readiness codes are automatically set during ordinary driving. However, when the battery is disconnected or run down, the codes are erased. Also, depending on your driving habits, the codes may not be completely set.

Also, if the malfunction indicator lamp had come on recently due to temporary malfunction such as a loose fuel tank cap, your vehicle may not pass the I/M test.

The malfunction indicator lamp will go off after taking several driving trips, but the error code in the OBD system will not be cleared unless about 40 trips or more are taken.

If your vehicle does not pass the I/M test even the malfunction indicator lamp does not come on, contact your Toyota dealer to prepare the vehicle for re–testing.

SECTION 7 – 1

DO–IT–YOURSELF MAINTENANCE

Introduction

Engine compartment overview 336
Fuse locations 338
Do–it–yourself service precautions 338
Positioning a floor jack 340
Parts and tools 341

Engine compartment overview

▶2.4 L 4–cylinder (2AZ–FE) engine

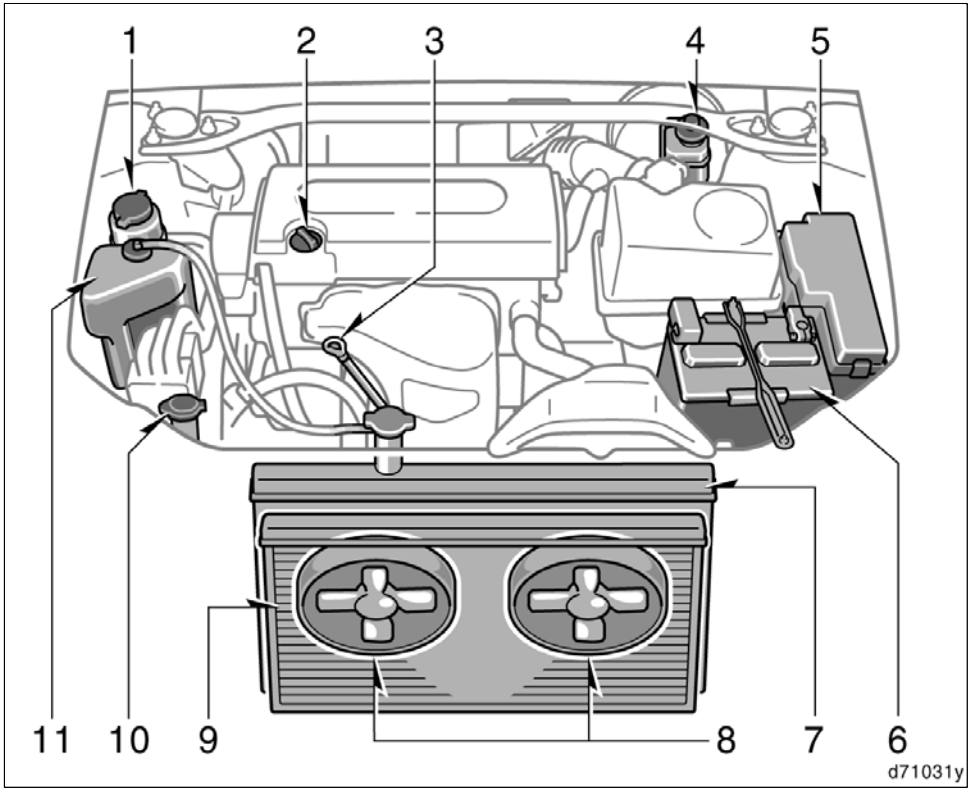

1. Power steering fluid reservoir
2. Engine oil filler cap
3. Engine oil level dipstick
4. Brake fluid reservoir
5. Fuse block
6. Battery
7. Radiator
8. Electric cooling fans
9. Condenser
10. Windshield washer fluid tank
11. Engine coolant reservoir

▶3.3 L V6 (3MZ–FE) engine

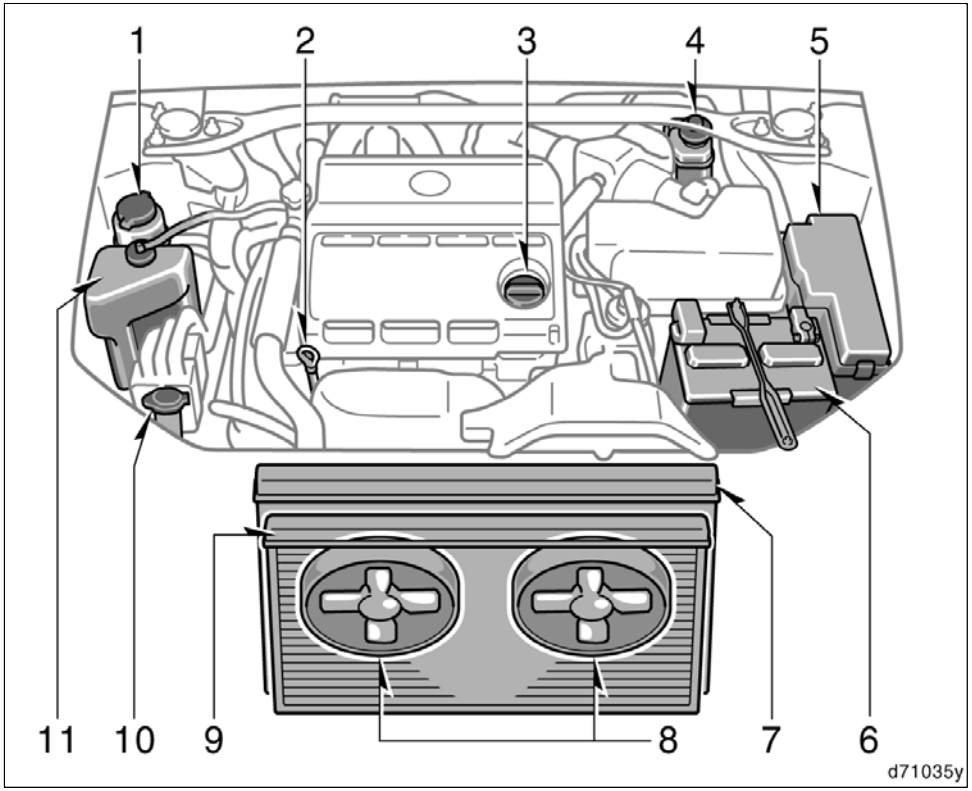

1. Power steering fluid reservoir
2. Engine oil level dipstick
3. Engine oil filler cap
4. Brake fluid reservoir
5. Fuse block
6. Battery
7. Radiator
8. Electric cooling fans
9. Condenser
10. Windshield washer fluid tank
11. Engine coolant reservoir

Fuse locations

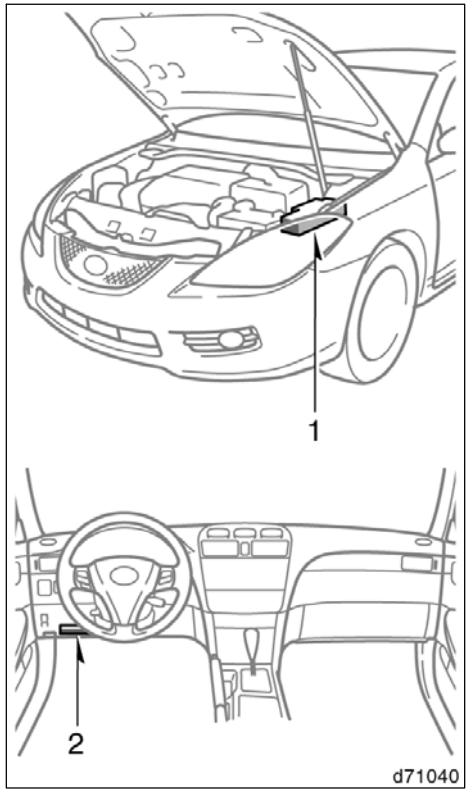

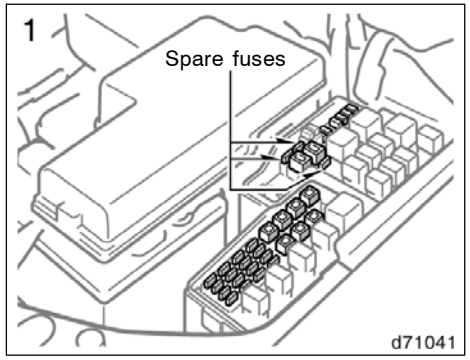

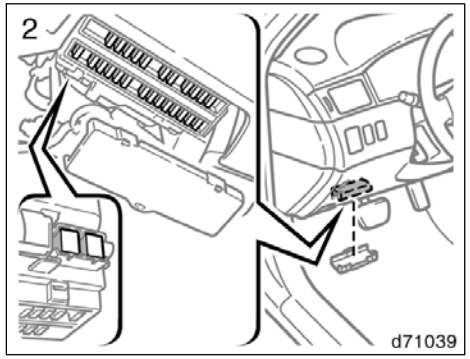

Do–it–yourself service precautions

If you perform maintenance by yourself, be sure to follow the correct procedure given in this Section.

You should be aware that improper or incomplete servicing may result in operating problems.

Performing do–it–yourself maintenance during the warranty period may affect your warranty coverage. Read the separate Toyota Warranty statement for details and suggestions.

This Section gives instructions only for those items that are relatively easy for an owner to perform. As explained in Section 6, there are still a number of items that must be done by a qualified technician with special tools.

For information on tools and parts for do–it–yourself maintenance, see “Parts and tools” on page 341 in this Section.

Utmost care should be taken when working on your vehicle to prevent accidental injury. Here are a few precautions that you should be especially careful to observe:

⚠ CAUTION

- When the engine is running, keep hands, clothing, and tools away from the moving fan and engine drive belts. (Removing rings, watches, and ties is advisable.)
- Right after driving, the engine compartment—the engine, radiator, exhaust manifold and spark plug boots, etc.—will be hot. So be careful not to touch them. Oil, fluids and spark plugs may also be hot.
- If the engine is hot, do not remove the radiator cap or loosen the drain plugs to prevent burning yourself.
- Do not leave anything that may burn easily, such as paper or rags, in the engine compartment.
- Do not smoke, cause sparks or allow open flames around fuel or the battery. Their fumes are flammable.
- Do not get under your vehicle with just the body jack supporting it. Always use automotive jack stands or other solid supports.
- Be sure that the ignition is off if you work near the electric cooling fans or radiator grille. With the ignition on, the electric cooling fans will automatically start to run if the engine coolant temperature is high and/or the air conditioning is on.
- Use eye protection whenever you work on or under your vehicle where you may be exposed to flying or falling material, fluid spray, etc.
- Used engine oil contains potentially harmful contaminants which may cause skin disorders such as inflammation or skin cancer, so care should be taken to avoid prolonged and repeated contact with it. To remove used engine oil from your skin, wash thoroughly with soap and water.
- Do not leave used oil within the reach of children.
- Be extremely cautious when working on the battery. It contains poisonous and corrosive sulfuric acid.
- Dispose of used oil and filter only in a safe and acceptable manner. Do not dispose of used oil and filter in household trash, in sewers or onto the ground. Call your dealer or a service station for information concerning recycling or disposal.

NOTICE

- *Remember that battery and ignition cables carry high currents or voltages. Be careful of accidentally causing a short circuit.*
- *Add only “Toyota Super Long Life Coolant” or similar high quality ethylene glycol based non–silicate, non–amine, non–nitrite, and non–borate coolant with long–life hybrid organic acid technology to fill the radiator. “Toyota Super Long Life Coolant” is a mixture of 50% coolant and 50% deionized water (for the U.S.A.) or 55% coolant and 45% deionized water (for Canada).*
- *If you spill some of the coolant, be sure to wash it off with water to prevent it from damaging the parts or paint.*

- ◆*Do not allow dirt or anything else to fall through the spark plugholes.*
- ◆*Use only spark plugs of the specified type. Using other types will cause engine damage, loss of performance or radio noise.*
- ◆*Do not reuse iridium–tipped spark plugs by cleaning or regapping.*
- ◆*Do not overfill automatic transmission fluid, or the transmission could be damaged.*
- ◆*Do not drive with the air cleaner filter removed, or excessive engine wear could result. Also backfiring could cause a fire in the engine compartment.*
- ◆*Be careful not to scratch the glass surface with the wiper frame.*
- ◆*When closing the engine hood, check to see that you have not forgotten any tools, rags, etc.*

Positioning a floor jack

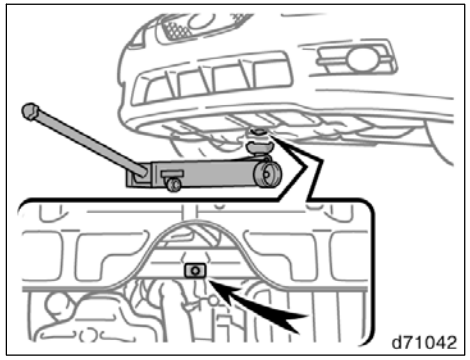

Front

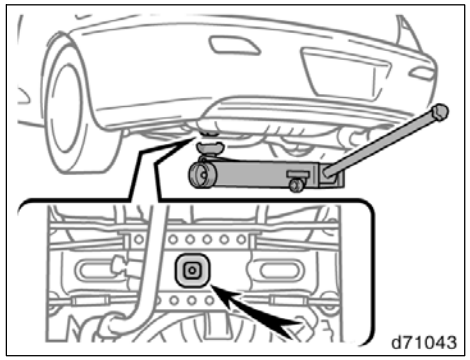

Rear

When jacking up your vehicle with the floor jack, position the jack correctly as shown in the illustrations.

⚠ CAUTION

When jacking, be sure to observe the following to reduce the possibility of death or serious injury:

- **Follow jacking instructions.**
- **Do not put any part of your body under the vehicle supported by the floor jack. Personal injury may occur.**
- **Do not start or run the engine while your vehicle is supported by the floor jack.**
- **Stop the vehicle on a level firm ground, firmly set the parking brake and put the transmission in “P” (automatic) or reverse (manual). Block the wheels on the opposite side of the floor jack up point if necessary.**

- **Make sure to set the floor jack properly in the jack point. Raising the vehicle with floor jack improperly positioned will damage the vehicle or may allow the vehicle to fall off the floor jack and cause personal injury.**
- **Never get under the vehicle when the vehicle is supported by the floor jack alone; use vehicle support stands.**
- **Do not raise the vehicle with someone in the vehicle.**
- **When raising the vehicle, do not place any objects on top of or underneath the floor jack.**

NOTICE

Make sure to place the floor jack correctly, or your vehicle may be damaged.

Parts and tools

Here is a list of parts and tools you will need to perform do–it–yourself maintenance. Remember all Toyota parts are designed in metric sizes, so your tools must be metric.

CHECKING THE ENGINE OIL LEVEL

Parts (if level is low):

- “Toyota Genuine Motor Oil” or equivalent

  See page 344 in Section 7–2 for details about engine oil selection.

Tools:

- Rag or paper towel
- Funnel (only for adding oil)

CHECKING THE ENGINE COOLANT LEVEL

Parts (if level is low):

- “Toyota Super Long Life Coolant” or similar high quality ethylene glycol based non–silicate, non–amine, non–nitrite, and non–borate coolant with long–life hybrid organic acid technology.

  “Toyota Super Long Life Coolant” is a mixture of 50% coolant and 50% deionized water (for the U.S.A.) or 55% coolant and 45% deionized water (for Canada).

Tools:

- Funnel (only for adding coolant)

CHECKING BRAKE FLUID

Parts (if level is low):

- SAE J1703 or FMVSS No.116 DOT 3 brake fluid

Tools:

- Rag or paper towel
- Funnel (only for adding fluid)

CHECKING POWER STEERING FLUID

Parts (if level is low):

- Automatic transmission fluid DEXRON®II or III

Tools:

- Rag or paper towel
- Funnel (only for adding fluid)

CHECKING BATTERY CONDITION

Tools:

- Warm water
- Baking soda
- Grease
- Conventional wrench (for terminal clamp bolts)

CHECKING AND REPLACING FUSES

Parts (if replacement is necessary):

- Genuine Toyota fuse or equivalent with same amperage rating as original

ADDING WASHER FLUID

Parts:

- Water
- Washer fluid containing antifreeze (for winter use)

Tools:

- Funnel

REPLACING LIGHT BULBS

Parts:

- Bulb with same number and wattage rating as original (See charts in “Replacing light bulbs” on page 364 in Section 7–3.)

SECTION 7–2

DO–IT–YOURSELF MAINTENANCE

Engine and Chassis

Checking the engine oil level 344
Checking the engine coolant level 346
Checking the radiator and condenser 347
Checking brake fluid 348
Checking power steering fluid 348
Checking tire inflation pressure 349
Checking and replacing tires 352
Rotating tires 354
Installing snow tires and chains 355
Replacing wheels 357
Aluminum wheel precautions 358

Checking the engine oil level

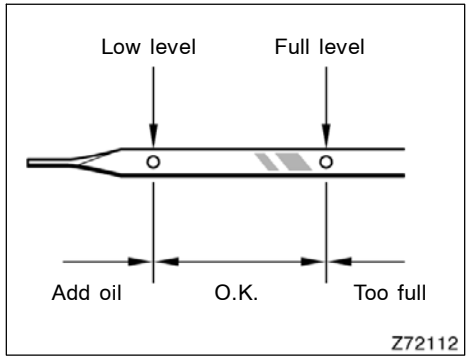

2.4 L 4–cylinder (2AZ–FE) engine

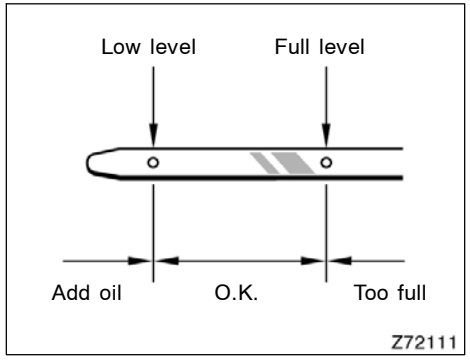

3.3 L V6 (3MZ–FE) engine

With the engine at operating temperature and turned off, check the oil level on the dipstick.

1. To get a correct reading, the vehicle should be on level ground. After turning off the engine, wait a few minutes for the oil to drain back into the bottom of the engine.
2. Pull the dipstick out, hold a rag under the end and wipe it clean.
3. Reinsert the dipstick—push it in as far as it will go, or the reading will not be correct.
4. Pull the dipstick out and look at the oil level while holding a rag under the end.

⚠ CAUTION

Be careful not to touch the hot exhaust manifold.

NOTICE

Be careful not to drop engine oil on the vehicle components.

If the oil level is below or only slightly above the low level line, add engine oil of the same type as already in the engine.

Remove the oil filler cap and add engine oil in small quantities at a time, checking the dipstick. We recommend that you use a funnel when adding oil.

The approximate quantity of oil needed to raise the level between low and full on the dipstick is indicated as follows:

2.4 L 4–cylinder (2AZ–FE) engine
1.1 L (1.1 qt., 1.0 Imp. qt.)
3.3 L V6 (3MZ–FE) engine
1.5 L (1.6 qt., 1.3 Imp. qt.)

For the engine oil capacity, see “Service specifications” on page 373 in Section 8.

When the level reaches within the correct range, install the filler cap hand–tight.

NOTICE

- ***Be careful not to spill engine oil on the vehicle components.***
- ***Avoid overfilling, or the engine could be damaged.***
- ***Check the oil level on the dipstick once again after adding the oil.***

ENGINE OIL SELECTION

“Toyota Genuine Motor Oil” is used in your Toyota vehicle. Use Toyota approved “Toyota Genuine Motor Oil” or equivalent to satisfy the following grade and viscosity.

Oil grade:
ILSAC multigrade engine oil

Recommended viscosity:

2.4 L 4–cylinder (2AZ–FE) engine
SAE 5W–20 or 0W–20

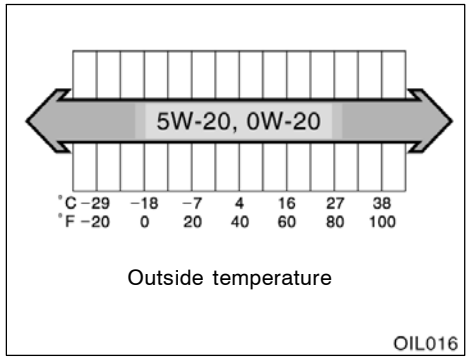

SAE 5W–20 or 0W–20 engine oil may be used. However, SAE 0W–20 is the best choice for good fuel economy, and good starting in cold weather.

3.3 L V6 (3MZ–FE) engine
SAE 5W–30

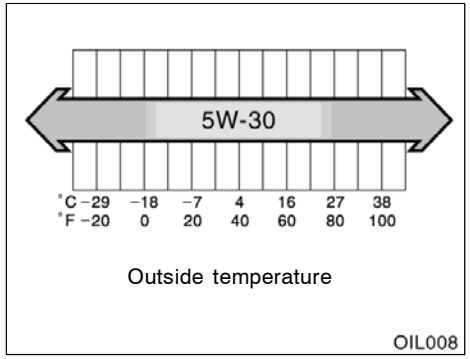

SAE 5W–30 is the best choice for good fuel economy, and good starting in cold weather.

If SAE 5W–30 oil is not available, SAE 10W–30 oil may be used. However, it should be replaced with SAE 5W–30 at the next oil change.

API-02

Oil identification mark

The ILSAC (International Lubricant Standardization and Approval Committee) Certification Mark is added to some oil containers to help you select the oil you should use.

To ensure excellent lubrication performance for your engine, “Toyota Genuine Motor Oil” is available, which has been specifically tested and approved for all Toyota engines.

Please contact your Toyota dealer for further details about “Toyota Genuine Motor Oil”.

Checking the engine coolant level

Look at the see–through coolant reservoir when the engine is cold. The coolant level is satisfactory if it is between the “F” and “L” lines on the reservoir. If the level is low, add the coolant. (For the coolant type, see “Coolant type selection” described below.)

The coolant level in the reservoir will vary with engine temperature. However, if the level is on or below the “L” line, add coolant. Bring the level up to the “F” line.

If the coolant level drops within a short time after replenishing, there may be a leak in the system. Visually check the radiator, hoses, engine coolant filler cap, radiator cap and drain cock and water pump.

If you can find no leak, have your Toyota dealer test the cap pressure and check for leaks in the cooling system.

⚠ CAUTION

To prevent burning yourself, do not remove the radiator cap when the engine is hot.

Coolant type selection

Use of improper coolants may damage your engine cooling system.

Only use “Toyota Super Long Life Coolant” or similar high quality ethylene glycol based non–silicate, non–amine, non–nitrite, and non–borate coolant with long–life hybrid organic acid technology. (Coolant with long–life hybrid organic acid technology is a combination of low phosphates and organic acids.)

For the U.S.A.—“Toyota Super Long Life Coolant” is a mixture of 50% coolant and 50% deionized water. This coolant provides protection down to about –35°C (–31°F).

For Canada—“Toyota Super Long Life Coolant” is a mixture of 55% coolant and 45% deionized water. This coolant provides protection down to about –42°C (–44°F).

NOTICE

Do not use plain water alone.

Toyota recommends “Toyota Super Long Life Coolant”, which has been tested to ensure that it will not cause corrosion nor result in malfunction of your engine coolant system with proper usage. “Toyota Super Long Life Coolant” is formulated with long–life hybrid organic acid technology and has been specifically designed to avoid engine cooling system malfunction on Toyota vehicles.

Please contact your Toyota dealer for further details.

Checking the radiator and condenser

If any of the above parts are extremely dirty or you are not sure of their condition, take your vehicle to a Toyota dealer.

⚠ CAUTION

To prevent burning yourself, be careful not to touch the radiator or condenser when the engine is hot.

NOTICE

To prevent damage to the radiator and condenser, do not perform the work by yourself.

Checking brake fluid

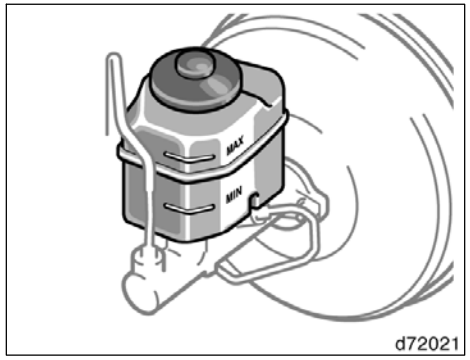

To check the fluid level, simply look at the see–through reservoir. The level should be between the “MAX” and “MIN” lines on the reservoir.

It is normal for the brake fluid level to go down slightly as the brake pads wear. So be sure to keep the reservoir filled.

If the reservoir needs frequent refilling, it may indicate a serious mechanical problem.

If the level is low, add SAE J1703 or FMVSS No.116 DOT 3 brake fluid to the brake reservoir.

Remove and replace the reservoir cap by hand. Fill the brake fluid to the dotted line. This brings the fluid to the correct level when you put the cap back on.

Use only newly opened brake fluid. Once opened, brake fluid absorbs moisture from the air, and excess moisture can cause a dangerous loss of braking.

⚠ CAUTION

Take care when filling the reservoir because brake fluid can harm your hands or eyes. If fluid gets on your hands or in your eyes, flush the affected area with clean water immediately. If you still feel uncomfortable with your hands or eyes, go to the doctor.

NOTICE

If you spill some of the fluid, be sure to wipe it off to prevent it from damaging the parts or paintwork.

Checking power steering fluid

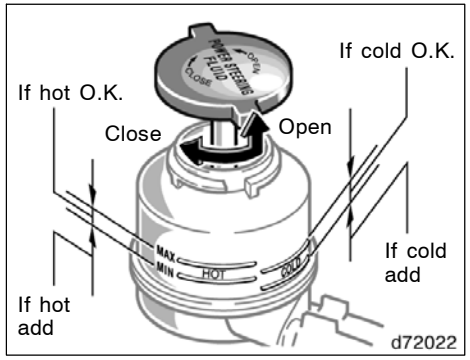

Check the fluid level through the reservoir. If necessary, add automatic transmission fluid DEXRON®II or III.

If the vehicle has been driven around 80 km/h (50 mph) for 20 minutes (a little more in frigid temperatures), the fluid is hot (60°C—80°C or 140°F—175°F). You may also check the level when the fluid is cold (about room temperature, 10°C—30°C or 50°F—85°F) if the engine has not been run for about five hours.

Clean all dirt from the outside of the reservoir tank and look at the fluid level. If the fluid is cold, the level should be in the “COLD” range. Similarly, if it is hot, the fluid level should be in the “HOT” range. If the level is at the low side of either range, add automatic transmission fluid DEXRON®II or III to bring the level within the range.

To remove the reservoir cap, turn it counterclockwise and lift up. To reinstall it, turn it clockwise. After replacing the reservoir cap, visually check the steering box case, vane pump and hose connections for leaks or damage.

CAUTION

The reservoir tank may be hot so be careful not to burn yourself.

NOTICE

Avoid overfilling, or the power steering could be damaged.

Checking tire inflation pressure

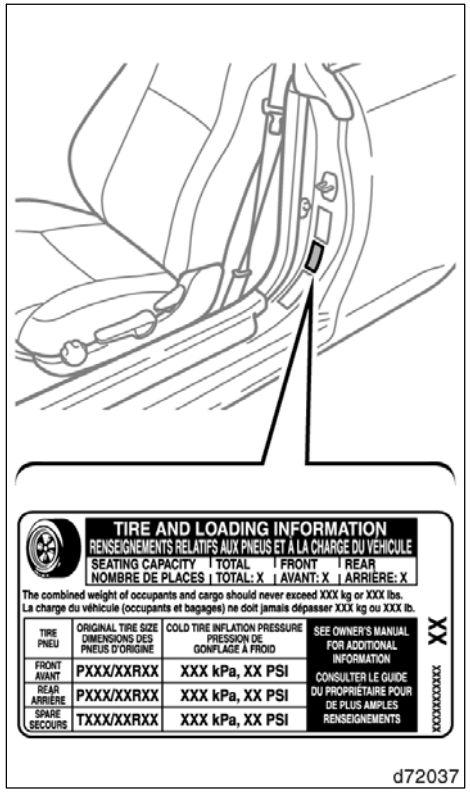

Keep your tire inflation pressures at the proper level.

The recommended cold tire inflation pressures, tire sizes and the combined weight of occupants and cargo (vehicle capacity weight) are described on pages 372 and 377. They are also on the tire and loading information label.

You should check the tire inflation pressure every two weeks, or at least once a month. And do not forget the spare!

The following instructions for checking tire inflation pressure should be observed:

- **The pressure should be checked only when the tires are cold.** If your vehicle has been parked for at least 3 hours and has not been driven for more than 1.5 km or 1 mile since, you will get an accurate cold tire inflation pressure reading.
- **Always use a tire pressure gauge.** The appearance of a tire can be misleading. Besides, tire inflation pressures that are even just a few pounds off can degrade ride and handling.
- **Take special care when adding air to the compact spare tire.** The smaller tire size can gain pressure very quickly. Add compressed air in small quantities and check the pressure often until it reaches the specified pressure.
- **Do not bleed or reduce tire inflation pressure after driving.** It is normal for the tire inflation pressure to be higher after driving.
- **Never exceed the vehicle capacity weight.** Passenger and luggage weight should be located so that the vehicle is balanced.

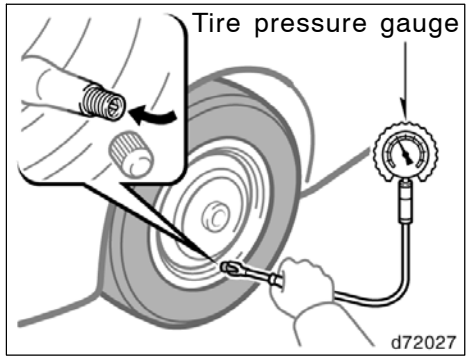

INSPECTION AND ADJUSTMENT PROCEDURE

1. Remove the tire valve cap.
2. Press the tip of the tire pressure gauge to the tire valve.
3. Read the pressure using the graduations of the gauge.
4. In case the tire inflation pressure is not within the prescribed range, insert the compressed air from the valve. In case of applying too much air, press the center of the valve and release the air to adjust.

5. After completing the tire inflation pressure measurement and adjustment, apply soapy water to the valve and check for leakage.
6. Install the tire valve cap.

If a gauge and air pump are not available, have your vehicle checked by your Toyota dealer.

⚠ CAUTION

Be sure to reinstall the tire valve caps. Without the valve caps, dirt or moisture could get into the valve core and cause air leakage. If the caps have been lost, have new ones put on as soon as possible.

Incorrect tire inflation pressure may waste fuel, reduce the comfort of driving, reduce tire life and make your vehicle less safe to drive.

If a tire frequently needs refilling, have it checked by your Toyota dealer.

⚠ CAUTION

Keep your tires properly inflated. Otherwise, the following conditions may occur and cause an accident resulting in death or serious injuries.

Low tire pressure (underinflation)—

- **Excessive wear**
- **Uneven wear**
- **Poor handling**
- **Possibility of blowouts from an overheated tire**
- **Poor sealing of the tire bead**
- **Wheel deformation and/or tire separation**
- **A greater possibility of tire damage from road hazards**

High tire pressure (overinflation)—

- **Poor handling**
- **Excessive wear**
- **Uneven wear**
- **A greater possibility of tire damage from road hazards**

Checking and replacing tires

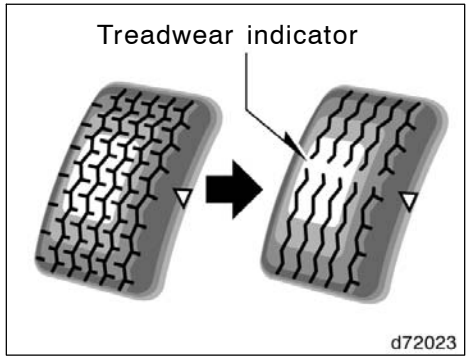

CHECKING YOUR TIRES

Check the tire’s tread for treadwear indicators. If the indicators show, replace the tires. The location of treadwear indicators is shown by the “TWI” or “Δ” marks, etc., molded on the sidewall of each tire.

The tires on your Toyota have built–in treadwear indicators to help you know when the tires need replacement. When the tread depth wears to 1.6 mm (0.06 in.) or less, the indicators will appear. If you can see the indicators in two or more adjacent grooves, the tire should be replaced. The lower the tread, the higher the risk of skidding.

The effectiveness of snow tires is lost if the tread wears down below 4 mm (0.16 in.).

If you have tire damage such as cuts, splits, cracks deep enough to expose the fabric, or bulges indicating internal damage, the tire should be replaced.

If a tire often goes flat or cannot be properly repaired due to the size or location of a cut or other damage, it should be replaced. If you are not sure, consult with your Toyota dealer.

If air loss occurs while driving, do not continue driving. Driving even a short distance can damage a tire beyond repair.

Any tires which are over 6 years old must be checked by a qualified technician even if damage is not obvious.

Tires deteriorate with age even if they have never or seldom been used.

This applies also to the spare tire and tires stored for future use.

REPLACING YOUR TIRES

When replacing a tire, use a tire of the same size and construction, and the same or greater maximum load as the originally installed tires.

Using any other size or type of tire may seriously affect handling, ride, speedometer/odometer calibration, ground clearance, and clearance between the body and tires or snow chains.

Check that the maximum load of the replaced tire is greater than 1/2 of the Gross Axle Weight Ratings (GAWR) of either the front axle or the rear axle, whichever is greater. As for the maximum load of the tire, see the load limit at maximum cold tire inflation pressure mentioned on the sidewall of the tire, and as for the Gross Axle Weight Ratings (GAWR), see the Certification Label.

For details about the side wall of the tire and the Certification Label, see pages 268 and 271 .

⚠ CAUTION

Observe the following instructions. Otherwise, an accident may occur resulting in death or serious injuries.

- **Do not mix radial, bias belted, or bias–ply tires on your vehicle, as this may cause dangerous handling characteristics resulting in loss of control.**
- **Do not use tires other than the manufacturer’s recommended size, as this may cause dangerous handling characteristics resulting in loss of control.**

Toyota recommends all four tires, or at least both of the front or rear tires be replaced at a time as a set.

See “If you have a flat tire” on page 305 for tire change procedure.

When a tire is replaced, the wheel should always be balanced.

An unbalanced wheel may affect vehicle handling and tire life. Wheels can get out of balance with regular use and should therefore be balanced occasionally.

When replacing a tubeless tire, the air valve should also be replaced with a new one.

Initial adjustment of the tire pressure warning system is necessary after you have rotated your tires. See “Tire pressure warning system” on page 155 in Section 1–7.

Rotating tires

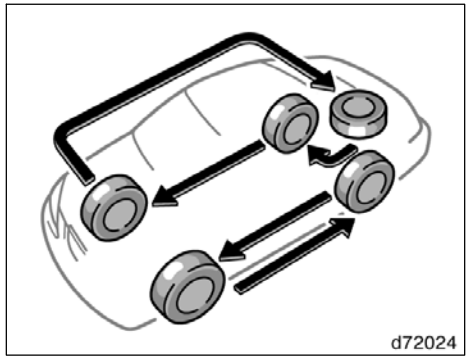

With a spare tire of the same wheel type as the installed tires

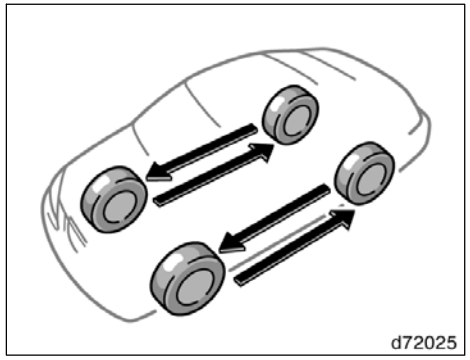

With a spare tire of different wheel type from the installed tires

To equalize the wear and help extend tire life, Toyota recommends that you rotate your tires according to the maintenance schedule. (For scheduled maintenance information, please refer to the “Scheduled Maintenance Guide” or “Owner’s Manual Supplement”.) However, the most appropriate timing for tire rotation may vary according to your driving habits and road surface conditions.

See “If you have a flat tire” on page 305 in Section 4 for tire change procedure.

When rotating tires, check for uneven wear and damage. Abnormal wear is usually caused by incorrect tire pressure, improper wheel alignment, out–of–balance wheels, or severe braking.

CAUTION

Do not include a compact spare tire when rotating the tires. It is designed for temporary use only.

The tire pressure warning system must be initialized when rotating tires, in case that specified tire inflation pressure is different between front and rear.

Installing snow tires and chains

WHEN TO USE SNOW TIRES OR CHAINS

Snow tires or chains are recommended when driving on snow or ice.

On wet or dry roads, conventional tires provide better traction than snow tires.

SNOW TIRE SELECTION

If you need snow tires, select tires of the same size, construction and load capacity as the originally installed tires.

Do not use tires other than those mentioned above. Do not install studded tires without first checking local regulations for possible restrictions.

CAUTION

Do not use snow tires other than the manufacturer’s recommended size, as this may cause dangerous handling characteristics resulting in loss of control. Otherwise, an accident may occur resulting in death or serious injuries.

SNOW TIRE INSTALLATION

Snow tires should be installed on all wheels.

Installing snow tires on the front wheels only can lead to an excessive difference in road grip capability between the front and rear tires which could cause loss of vehicle control.

When storing removed tires you should store them in a cool dry place. Mark the direction of rotation and be sure to install them in the same direction when replacing.

CAUTION

- **Do not drive with the snow tires incorrectly inflated.**
- **Never drive over 120 km/h (75 mph) with any type of snow tires.**

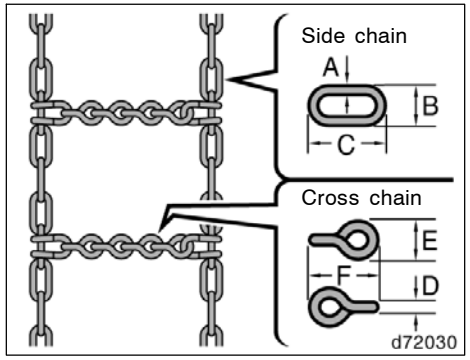

TIRE CHAIN SELECTION

Use the tire chains of correct size.

For P215/60R16 and P215/55R17 tires, use the following type chains.

		mm (in.)
A	Diameter of side chain	3 (0.12)
B	Width of side chain	10 (0.39)
C	Length of side chain	30 (1.18)
D	Diameter of cross chain	4 (0.16)
E	Width of cross chain	14 (0.55)
F	Length of cross chain	25 (0.98)

Regulations regarding the use of tire chains vary according to location or type of road, so always check local regulations before installing chains.

NOTICE

If the wrong combination of tire and chain is used, the chains could damage the vehicle body.

CHAIN INSTALLATION

Install the chains on the front tires as tightly as possible. Do not use tire chains on the rear tires. Retighten chains after driving 0.5—1.0 km (1/4—1/2 mile).

When installing chains on your tires, carefully follow the instructions of the chain manufacturer.

If wheel covers are used, they will be scratched by the chain band, so remove the covers before putting on the chains.

If the chains are installed, the tire pressure warning system may not operate properly. For details, see “Tire pressure warning system” on page 155 in Section 1–7.

⚠ CAUTION

- **Do not exceed 50 km/h (30 mph) or the chain manufacturer’s recommended speed limit, whichever is lower.**
- **Drive carefully avoiding bumps, holes, and sharp turns, which may cause the vehicle to bounce.**
- **Avoid sharp turns or locked–wheel braking, as use of chains may adversely affect vehicle handling.**
- **When driving with chains installed, be sure to drive carefully. Slow down before entering curves to avoid losing control of the vehicle. Otherwise an accident may occur.**

NOTICE

Do not attempt to use a tire chain on the compact spare tire, as it may result in damage to the vehicle as well as the tire.

Replacing wheels

As you might have difficulty in identifying a flat or deflated tire, a tire pressure warning system is provided on this vehicle.

When replacing the wheels, be sure to install tire pressure warning valves and transmitters on the wheels. Consult your Toyota dealer about how to set up the tire pressure warning valves and transmitters.

CAUTION

- **Have the tires, wheels or tire pressure warning valves and transmitters replaced and ID codes registered by Toyota dealer. If you need tire pressure warning valves and transmitters, purchase from Toyota dealer.**
- **The tire pressure warning valve and transmitter nuts should always be tightened to a torque of 4 N·m (0.4 kgf·m, 2.9 ft·lbf).**
- **The use of non–genuine wheels may result in the tire pressure warning system failure or air–leak.**

WHEN TO REPLACE YOUR WHEELS

If you have wheel damage such as bending, cracks or heavy corrosion, the wheel should be replaced.

If you fail to replace a damaged wheel, the tire may slip off the wheel or cause loss of handling control.

WHEEL SELECTION

When replacing wheels, care should be taken to ensure that the wheels are replaced by ones with the same load capacity, diameter, rim width, and offset.

Correct replacement wheels are available at your Toyota dealer.

A wheel of a different size or type may adversely affect handling, wheel and bearing life, brake cooling, speedometer/odometer calibration, stopping ability, headlight aim, bumper height, vehicle ground clearance, and tire or snow chain clearance to the body and chassis.

Replacement with used wheels is not recommended as they may have been subjected to rough treatment or high mileage and could fail without warning. Also, bent wheels which have been straightened may have structural damage and therefore should not be used. Never use an inner tube in a leaking wheel which is designed for a tubeless tire.

CAUTION

Do not use wheels other than the manufacturer’s recommended size, as this may cause dangerous handling characteristics resulting in loss of control. Otherwise, an accident may occur resulting in death or serious injuries.

Initial adjustment of the tire pressure warning system is necessary after you have rotated your tires. See “Tire pressure warning system” on page 155 in Section 1–7.

Aluminum wheel precautions

- When installing aluminum wheels, check that the wheel nuts are tight after driving your vehicle the first 1600 km (1000 miles).
- If you have rotated, repaired, or changed your tires, check that the wheel nuts are still tight after driving 1600 km (1000 miles).
- When using tire chains, be careful not to damage the aluminum wheels.
- Use only Toyota wheel nuts and wrench designed for your aluminum wheels.
- When balancing your wheels, use only Toyota balance weights or equivalent and a plastic or rubber hammer.
- As with any wheel, periodically check your aluminum wheels for damage. If damaged, replace immediately.

SECTION 7–3

DO–IT–YOURSELF MAINTENANCE

Electrical components

Checking battery condition 360
Battery recharging precautions 361
Checking and replacing fuses 362
Adding washer fluid 363
Replacing light bulbs 364

Checking battery condition——Precautions

⚠ CAUTION

BATTERY PRECAUTIONS

The battery produces flammable and explosive hydrogen gas.

- **Do not cause a spark from the battery with tools.**
- **Do not smoke or light a match near the battery.**

The electrolyte contains poisonous and corrosive sulfuric acid.

- **Avoid contact with eyes, skin or clothes.**
- **Never ingest electrolyte.**
- **Wear protective safety glasses when working near the battery.**
- **Keep children away from the battery.**

EMERGENCY MEASURES

- **If electrolyte gets in your eyes, flush your eyes with clean water immediately and get immediate medical attention. If possible, continue to apply water with a sponge or cloth while en route to the medical office.**
- **If electrolyte gets on your skin, thoroughly wash the contact area. If you feel pain or burning, get medical attention immediately.**
- **If electrolyte gets on your clothes, there is a possibility of its soaking through to your skin, so immediately take off the exposed clothing and follow the procedure above, if necessary.**
- **If you accidentally swallow electrolyte, drink a large quantity of water or milk. Follow with milk of magnesia, beaten raw egg or vegetable oil. Then go immediately for emergency help.**

—Checking battery exterior

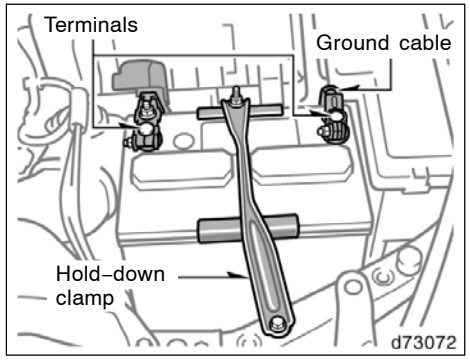

Check the battery for corroded or loose terminal connections, cracks, or loose hold–down clamp.

a. If the battery is corroded, wash it off with a solution of warm water and baking soda. Coat the outside of the terminals with grease to prevent further corrosion.

b. If the terminal connections are loose, tighten their clamp nuts—but do not overtighten.

c. Tighten the hold–down clamp only enough to keep the battery firmly in place. Overtightening may damage the battery case.

NOTICE

- ***Be sure the engine and all accessories are off before performing maintenance.***
- ***When checking the battery, remove the ground cable from the negative terminal (“–” mark) first and reinstall it last.***
- ***Be careful not to cause a short circuit with tools.***
- ***Take care no solution gets into the battery when washing it.***

If the battery is disconnected or run down, the driver’s power window (coupe) and moon roof may not operate automatically and the jam protection will not function correctly after you reconnect, replace or recharge the battery. In any of these cases, you should initialize the power window and moon roof. To initialize the power window and moon roof, see “Power windows” on page 24 and “Electric moon roof” on page 34 in Section 1–2.

—Checking battery condition

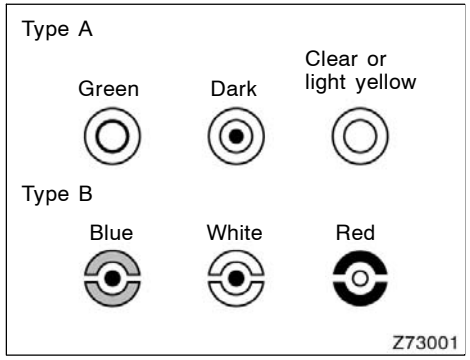

CHECKING BY INDICATOR

Check the battery condition by the indicator color.

Indicator color		Condition
Type A	Type B	
Green	Blue	Good
Dark	White	Charging necessary. Have battery checked by your Toyota dealer.
Clear or light yellow	Red	Have battery checked by your Toyota dealer.

Battery recharging precautions

During recharging, the battery is producing hydrogen gas.

Therefore, before recharging:

1. If recharging with the battery installed on the vehicle, be sure to disconnect the ground cable.
2. Be sure the power switch on the recharger is off when connecting the charger cables to the battery and when disconnecting them.

⚠ CAUTION

- **Always charge the battery in an unconfined area. Do not charge the battery in a garage or closed room where there is not sufficient ventilation.**
- **Only do a slow charge (5 A or less). Charging at a quicker rate is dangerous. The battery may explode, causing personal injuries.**

NOTICE

Never recharge the battery while the engine is running. Also, be sure all accessories are turned off.

Checking and replacing fuses

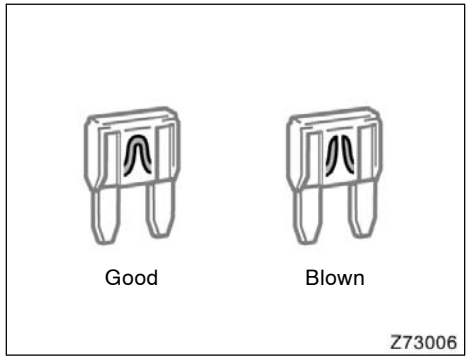

Type A

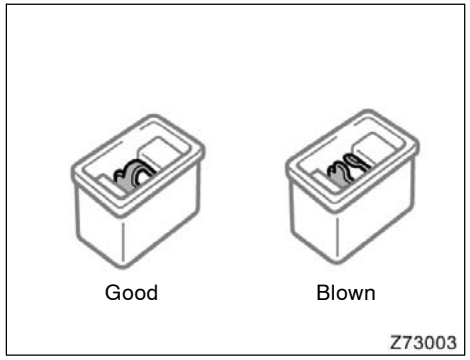

Type C

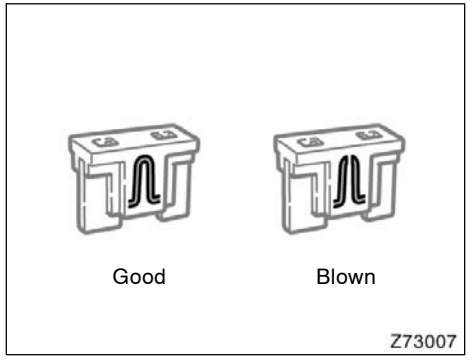

Type B

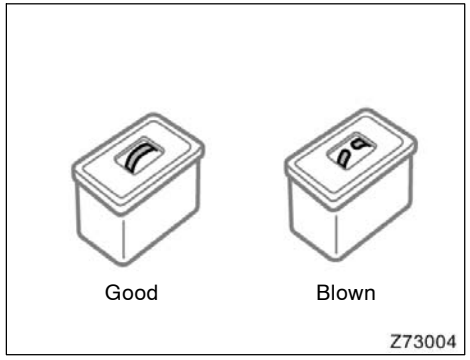

Type D

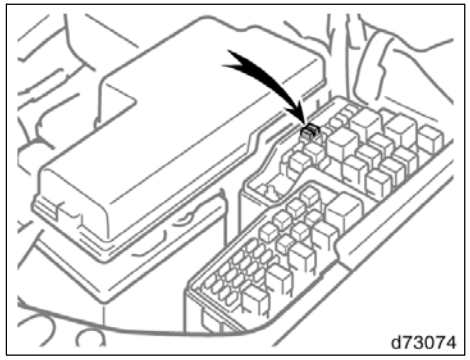

If the headlights or other electrical components do not work, check the fuses. If any of the fuses are blown, they must be replaced.

See “Fuse locations” on page 338 in Section 7–1 for locations of the fuses.

Turn the engine switch and inoperative component off. Pull the suspected fuse straight out and check it.

Determine which fuse may be causing the problem. The lid of the fuse box shows the name of the circuit for each fuse. See page 377 in Section 8 for the functions controlled by each circuit.

Type A and B fuses can be pulled out by the pull–out tool. The location of the pull–out tool is shown in the illustration.

If you are not sure whether the fuse has blown, try replacing the suspected fuse with one that you know is good.

If the fuse has blown, push a new fuse into the clip.

Only install a fuse with the amperage rating designated on the fuse box lid.

If you do not have a spare fuse, in an emergency you can pull out the “P/POINT” or “RAD1” fuse, which may be dispensable for normal driving, and use it if its amperage rating is the same.

If you cannot use one of the same amperage, use one that is lower, but as close to the rating as possible. If the amperage is lower than that specified, the fuse might blow out again but this does not indicate anything wrong. Be sure to get the correct fuse as soon as possible and return the substitute to its original clip.

It is a good idea to purchase a set of spare fuses and keep them in your vehicle for emergencies.

If the new fuse immediately blows out, there is a problem with the electrical system. Have your Toyota dealer correct it as soon as possible.

You should normalize the driver’s power window (coupe) and moon roof may not operate correctly after replacing blown fuses. To normalize the power window and moon roof, see “Power windows” on page 24 and “Electric moon roof” on page 34 in Section 1–2.

CAUTION

Never use a fuse with a higher amperage rating, or any other object, in place of a fuse. This may cause extensive damage and possibly a fire.

Adding washer fluid

If any washer does not work or the low windshield washer fluid level warning light comes on, the washer tank may be empty. Add washer fluid.

You may use plain water as washer fluid. However, in cold areas where temperatures range below the freezing point, use washer fluid containing antifreeze. This product is available at your Toyota dealer and most auto parts stores. Follow the manufacturer’s directions for how much to mix with water.

NOTICE

Do not use engine antifreeze or any other substitute because it may damage your vehicle’s paint.

Replacing light bulbs—

The following illustrations show how to gain access to the bulbs. When replacing a bulb, make sure the engine switch and light switch are off. Use bulbs with the wattage ratings given in the table.

The stop/tail and rear side maker lights and high mounted stoplight (convertible) consist of a number of LEDs. If any of the LEDs burn out, take your vehicle to your Toyota dealer to have the light replaced.

If one or more LEDs in a stop/tail light burn out, your vehicle may not conform to local laws (SAE).

CAUTION

- **To prevent burning yourself, do not replace the light bulbs while they are hot.**
- **Halogen bulbs have pressurized gas inside and require special handling. They can burst or shatter if scratched or dropped. Hold a bulb only by its plastic or metal case. Do not touch the glass part of a bulb with bare hands.**

Vehicle with discharge headlights—

- **Do not touch the high–intensity discharge headlight’s high voltage socket when the headlights are turned on. An extremely high voltage of 20000 V will be discharged and could result in serious injury or death by electric shock.**
- **Do not attempt to take apart or repair the low beam headlight bulbs, connectors, power supply circuits, or related components. Doing so could result in electric shock and serious injury or death. Call your Toyota dealer for headlight repair or servicing, including replacement of bulbs and bulb disposal.**

NOTICE

Only use a bulb of the listed type.

The inside of the lens of exterior lights such as headlights may temporarily fog up when the lens becomes wet in the rain or in a car wash. This is not a problem because the fogging is caused by the temperature difference between the outside and inside of the lens, just like the windshield fogs up in the rain. However, if there is a large drop of water on the inside of the lens, or if there is water pooled inside the light, contact your Toyota dealer.

Light bulbs	Bulb No.	W	Type
Headlights (low) With discharge headlights Without discharge headlights	—	35 55	A B
Headlights (high beam)	—	65	C
Front fog lights	—	55	B
Parking, front side marker and front turn signal lights	3457NA	30/8	E
Rear turn signal lights	T20NA	21	E
Back–up lights	921	16	D
License plate lights	194	3.8	D
High mounted stoplight (coupe)	921	17.9	D
Personal lights (coupe)	—	5	D

Light bulbs	Bulb No.	W	Type
Personal lights (convertible)	—	8	F
Interior light	—	8	G
Vanity lights (coupe)	—	1.4	G
Vanity lights (convertible)	—	1.5	F
Glove box light	—	1.2	D
Quarter trim courtesy light	194	3.8	F
Trunk light (coupe)	2825	5	D
Trunk light (convertible)	—	3.8	D

A: D4S discharge bulbs
B: H11 halogen bulbs
C: HIR1 halogen bulbs
D: Wedge base bulbs (clear)
E: Wedge base bulb (amber)
F: Single end bulbs
G: Double end bulbs

—Low beam headlights (except discharge headlights)

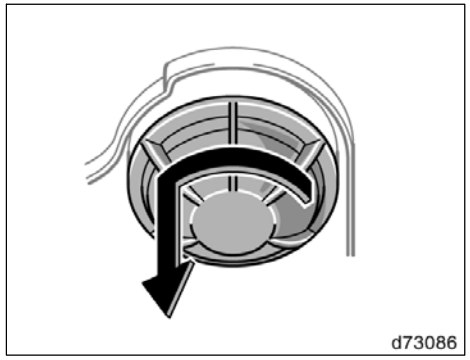

1. Open the hood. Turn the bulb cover counterclockwise and remove it.

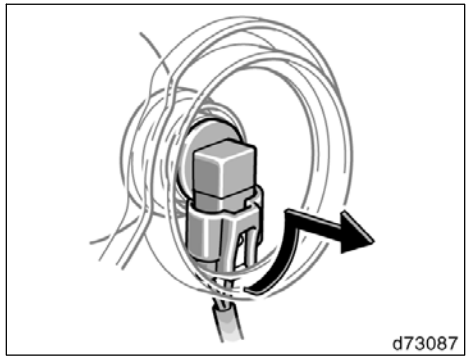

2. Turn the bulb base counterclockwise to the front of the vehicle as shown.

The above illustration shows the left–hand headlight.

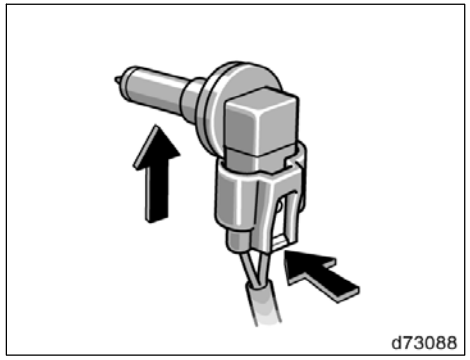

3. Unplug the connector while depressing the lock release.

If the connector is tight, wiggle it.

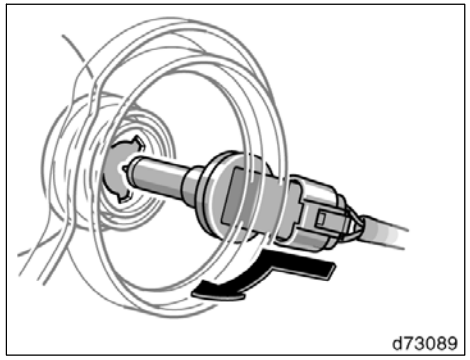

4. Plug in a new bulb into the connector and install it into the mounting hole.

Aiming is not necessary after replacing the bulb. When aiming adjustment is necessary, contact your Toyota dealer.

—High beam headlights

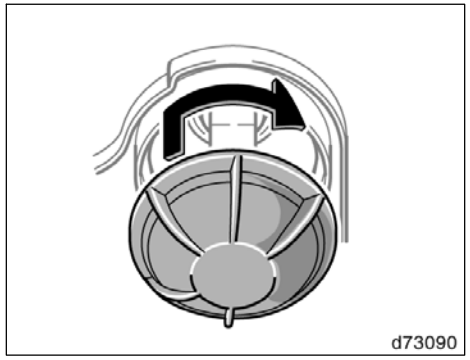

5. Install the bulb cover and turn it clockwise.

Aiming is not necessary after replacing the bulb. When aiming adjustment is necessary, contact your Toyota dealer.

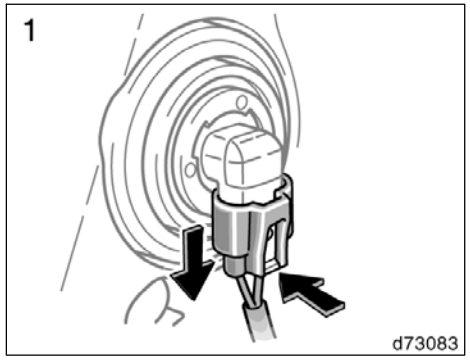

1. Open the hood. Unplug the connector while depressing the lock release.

If the connector is tight, wiggle it.

The above illustration shows the left–hand headlight.

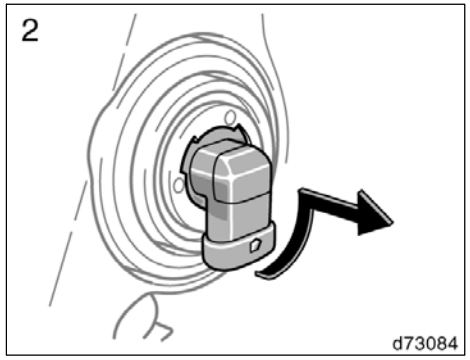

2. Turn the bulb base counterclockwise to the front of the vehicle as shown.

—Rear turn signal lights

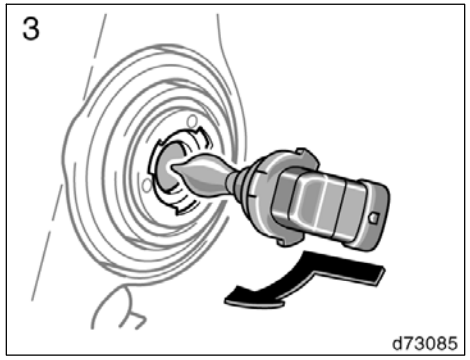

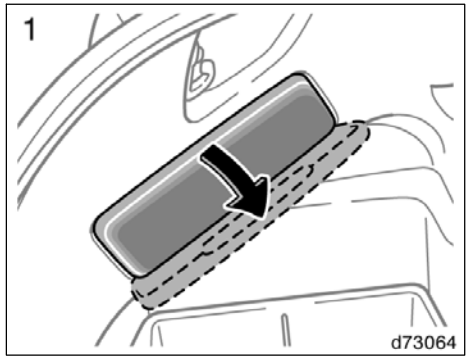

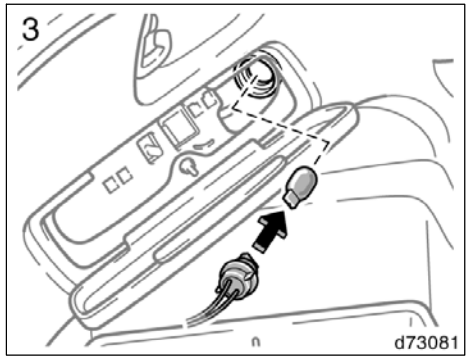

3. Install a new bulb into the mounting hole. Plug the connector.

Aiming is not necessary after replacing the bulb. When aiming adjustment is necessary, contact your Toyota dealer.

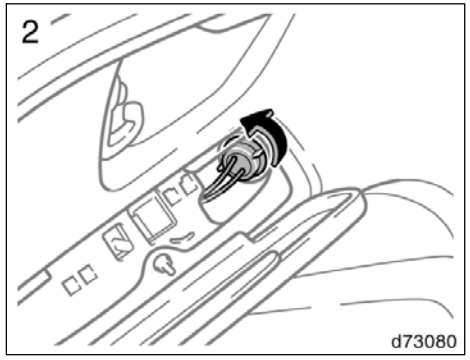

—High mounted stoplight (coupe)

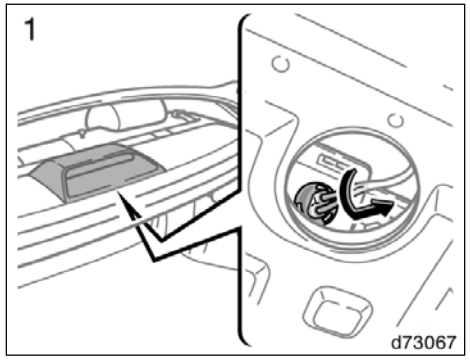

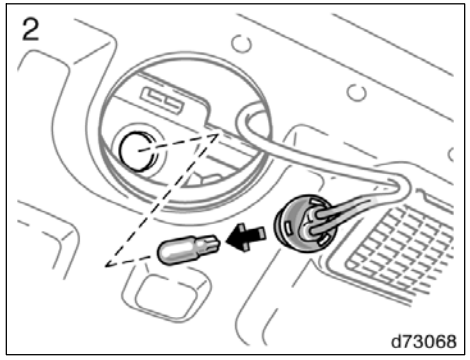

—License plate lights

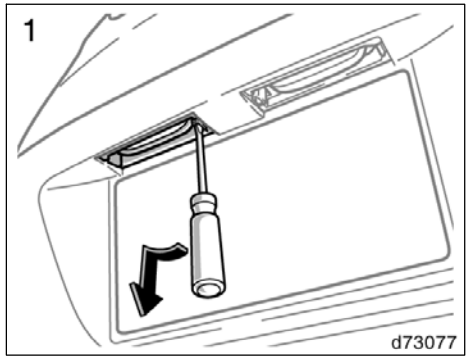

Use a flathead screwdriver.

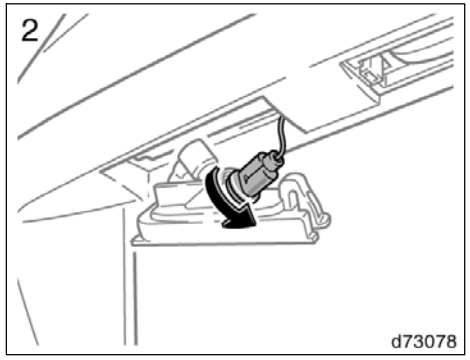

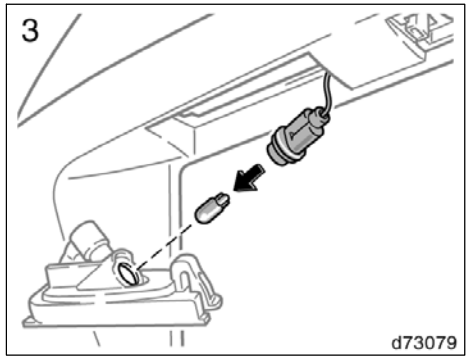

—Front fog, parking, front side marker, front turn signal and back–up lights

If either the left or right front fog, parking, front side marker, front turn signal and back–up lights burns out, contact your Toyota dealer.

NOTICE
Do not try to replace the front fog, parking, front side marker and front turn signal light bulbs by yourself. You may damage the vehicle.

SECTION 8

SPECIFICATIONS

Specifications

Dimensions and weight 372
Engine 372
Fuel 373
Service specifications 373
Tires 377
Fuses 377

Dimensions and weight

		Coupe	Convertible
Overall length	mm (in.)	4890 (192.5)	4890 (192.5)
Overall width	mm (in.)	1815 (71.5)	1815 (71.5)
Overall height*	mm (in.)	1440 (56.7)	1450 (57.1)
Wheelbase	mm (in.)	2720 (107.1)	2720 (107.1)
Front tread	mm (in.)	1545 (60.8)	1545 (60.8)
Rear tread	mm (in.)	1535 (60.4)	1535 (60.4)
Vehicle capacity weight (occupants + luggage)	kg (lb.)	410 (900)	342 (754)

*: Unladen vehicle

Engine

Model:
2AZ–FE and 3MZ–FE

Type:
2AZ–FE engine
4 cylinder in line, 4 cycle, gasoline
3MZ–FE engine
6 cylinder V type 4 cycle, gasoline

Bore and stroke, mm (in.):
2AZ–FE engine
88.5 × 96.0 (3.48 × 3.78)
3MZ–FE engine
92.0 × 83.0 (3.62 × 3.27)

Displacement, cm^3 (cu. in.):
2AZ–FE engine 2362 (144.1)
3MZ–FE engine 3311 (201.9)

Fuel

Fuel type:

Unleaded gasoline, Octane Rating 87 (Research Octane Number 91) or higher

Fuel tank capacity, L (gal., Imp. gal.):
70 (18.5, 15.4)

Service specifications

ENGINE

Valve clearance (engine cold), mm (in.):

2.4 L 4–cylinder (2AZ–FE) engine

Intake	0.19—0.29 (0.007—0.011)
Exhaust	0.38—0.48 (0.015—0.019)

3.3 L V6 (3MZ–FE) engine

Intake	0.15—0.25 (0.006—0.010)
Exhaust	0.25—0.35 (0.010—0.014)

Spark plug type:

DENSO	SK20R11
NGK	IFR6A11

Spark plug gap, mm(in.):
1.1 (0.043)

3.3 L V6 (3MZ–FE) engine only—Drive belt tension measured with Borroughs drive belt tension gauge No.BT–33–73F (used belt), lbf:
115 ± 20

ENGINE LUBRICATION

Oil capacity (drain and refill), L (qt., Imp. qt.):

2.4 L 4–cylinder (2AZ–FE) engine

With filter	4.3 (4.5, 3.7)
Without filter	4.1 (4.3, 3.6)

3.3 L V6 (3MZ–FE) engine

With filter	4.7 (5.0, 4.1)
Without filter	4.5 (4.8, 4.0)

“Toyota Genuine Motor Oil” is used in your Toyota vehicle. Use Toyota approved “Toyota Genuine Motor Oil” or equivalent to satisfy the following grade and viscosity.

Oil grade:
ILSAC multigrade engine oil

Recommended oil viscosity:

2.4 L 4–cylinder (2AZ–FE) engine
SAE 5W–20 or 0W–20

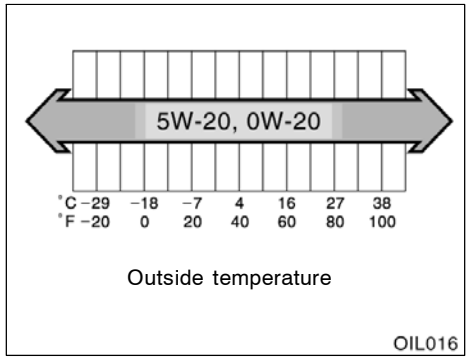

3.3 L V6 (3MZ–FE) engine
SAE 5W–30

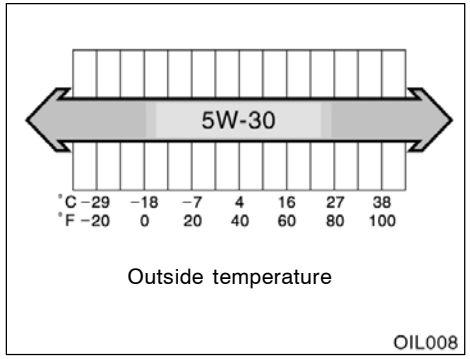

Please contact your Toyota dealer for further details.

COOLING SYSTEM

Total capacity, L (qt., Imp. qt.):

2.4 L 4–cylinder (2AZ–FE) engine
6.2 (6.6, 5.4)

3.3 L V6 (3MZ–FE) engine
9.2 (9.8, 8.1)

Coolant type:

“Toyota Super Long Life Coolant” is used in your Toyota vehicle at factory fill. In order to avoid technical problems, only use “Toyota Super Long Life Coolant” or similar high quality ethylene glycol based non–silicate, non–amine, non–nitrite, and non–borate coolant with long–life hybrid organic acid technology. (Coolant with long–life hybrid organic acid technology is a combination of low phosphates and organic acids.)

Do not use plain water alone.

Please contact your Toyota dealer for further details.

BATTERY

Open voltage* at 20°C (68°F):

12.6—12.8 V	Fully charged
12.2—12.4 V	Half charged
11.8—12.0 V	Discharged

*: Voltage that is checked 20 minutes after the key is removed with all the lights turned off

Charging rates:
5 A max.

NOTE: If replacement is necessary, make sure to do so with a battery that meets the same standard as the original.

CLUTCH

Pedal free play, mm (in.):
5—15 (0.2—0.6)

Fluid type:
SAE J1703 or FMVSS No.116 DOT 3

MANUAL TRANSAXLE

Oil capacity, L (qt., Imp. qt.):
2.5 (2.6, 2.2)

Oil type:
Gear oil API GL–4 or GL–5

Recommended oil viscosity:
SAE 75W–90

AUTOMATIC TRANSAXLE

Fluid capacity (drain and refill), L (qt., Imp. qt.):
3.5 (3.7, 3.1)

Fluid type:

2.4 L 4–cylinder (2AZ–FE) engine
Toyota Genuine ATF WS

3.3 L V6 (3MZ–FE) engine
Toyota Genuine ATF Type T–IV

Change automatic transmission fluid only as necessary.

Generally, it is necessary to change automatic transmission fluid only if your vehicle is driven under one of the Special Operating Conditions listed in your “Scheduled Maintenance Guide” or “Owner’s Manual Supplement”. When changing the automatic transmission fluid, use only the following types to aid in assuring optimum transaxle performance.

2.4 L 4–cylinder (2AZ–FE) engine
“Toyota Genuine ATF WS” (ATF JWS3324 or NWS9638)

3.3 L V6 (3MZ–FE) engine
“Toyota Genuine ATF Type T–IV” (ATF JWS3309 or NWS6500)

Notice: Using automatic transmission fluid other than “Toyota Genuine ATF WS” (2.4 L 4–cylinder [2AZ–FE] engine) or “Toyota genuine ATF Type T–IV” (3.3 L V6 [3MZ–FE] engine) may cause deterioration in shift quality, locking up of your transmission accompanied by vibration, and ultimately damage the automatic transmission of your vehicle.

Please contact your Toyota dealer for further details.

BRAKES

Minimum pedal clearance when depressed with the force of 490 N (50 kgf, 110 lbf) with the engine running, mm (in.):

With vehicle stability control system
78 (3.1)

Without vehicle stability control system
68.5 (2.7)

Pedal free play, mm (in.):
1—6 (0.04—0.24)

Pad wear limit, mm (in.):
1.0 (0.04)

Lining wear limit, mm (in.):
1.0 (0.04)

Parking brake adjustment when pulled with the force of 196 N (20 kgf, 44 lbf):
6—9 clicks

Fluid type:
SAE J1703 or FMVSS No.116 DOT 3

STEERING

Wheel free play:
Less than 30 mm (1.2 in.)

Power steering fluid type:
Automatic transmission fluid DEXRON®II or III

Tires

Tire size and cold tire inflation pressure:

Front and rear kPa (kgf/cm^2 or bar, psi)

Tire size	Front	Rear	Wheel size
P215/60R16 94V	200 (2.0, 29)	200 (2.0, 29)	16 × 6 1/2 J 16 × 6 1/2 JJ
P215/55R17 93V	220 (2.2, 32)	220 (2.2, 32)	17 × 7 J

When driving under the above driving conditions at sustained high speeds above 160 km/h (100 mph), in countries where such speeds are permitted by law, inflate the front and rear tires to 240 kPa (2.4 kgf/cm^2 or bar, 35 psi) provided that it does not exceed the maximum cold tire inflation pressure molded on the tire sidewall.

Spare kPa (kgf/cm^2 or bar, psi)

Tire size	Front	Rear	Wheel size
P215/60R16 94V	200 (2.0, 29)	200 (2.0, 29)	16 × 6 1/2 J 16 × 6 1/2 JJ
P215/55R17 93V	220 (2.2, 32)	220 (2.2, 32)	17 × 7 J
T155/70R17 110M	420 (4.2, 60)	420 (4.2, 60)	17 × 4 T

Wheel nut torque, N·m (kgf·m, ft·lbf):
103 (10.5, 76)

NOTE: For a complete information on tires (e.g. replacing tires or replacing wheels), see “Checking tire inflation pressure” through “Aluminum wheel precautions”, pages 349 through 358, in Section 7–2.

Fuses

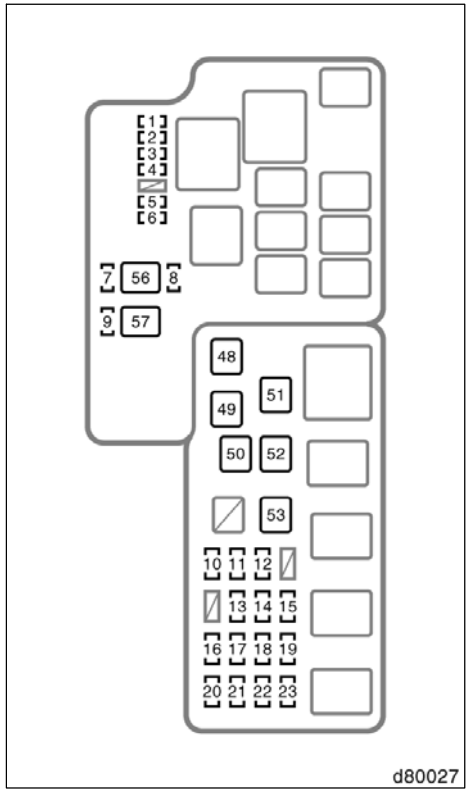

Engine compartment

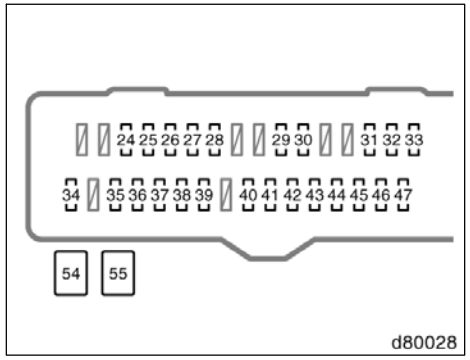

Instrument panel

Fuses (type A)

1. **HEAD LH LWR 15 A:** Left–hand headlight (low beam)
2. **HEAD RH LWR 15 A:** Right–hand headlight (low beam)
3. **DRL 5 A:** Daytime running light system
4. **A/C 10 A:** Air conditioning system
5. **EFI2 5 A:** Multiport fuel injection system/sequential multiport fuel injection system
6. **ST 5 A:** Starting system
7. **SPARE 10 A:** Spare fuse
8. **SPARE 15 A:** Spare fuse
9. **SPARE 5 A:** Spare fuse
10. **AM2 30 A:** Starting system, “IGN” and “IG2” fuses
11. **HEAD LH UPR 10 A:** Left–hand headlight (high beam)
12. **HEAD RH UPR 10 A:** Right–hand headlight (high beam)
13. **ALT–S 5 A:** Charging system
14. **IGN 15 A:** Ignition system, multi–information display
15. **IG2 10 A:** Multiport fuel injection system/sequential multiport fuel injection system, SRS airbag system, cruise control system, gauges and meters, front passenger occupant classification system
16. **DOOR1 25 A:** Multiplex communication system (power door lock system, auto–door locking system, wireless remote control system)
17. **EFI 20 A:** Multiport fuel injection system/sequential multiport fuel injection system, emission control system
18. **HORN 10 A:** Horns
19. **D.C.C 30 A:** “ECU–B”, “RAD1” and “DOME” fuses
20. **A/F 25 A:** Multiport fuel injection system/sequential multiport fuel injection system
21. **ABS No.2 25 A:** Anti–lock brake system, vehicle stability control system, traction control system, brake assist system
22. **ETCS 10 A:** Multiport fuel injection system/sequential multiport fuel injection system
23. **HAZ 15 A:** Emergency flashers

Fuses (type B)

24. **P/W No.2 7.5 A (convertible):** Side power windows
25. **FOG 15 A:** Front fog lights
26. **OBD 7.5 A:** On–board diagnosis system
27. **AMP 25 A:** Audio system
28. **STOP 15 A:** Stop lights, high mounted stoplight, anti–lock brake system, shift lock control system, vehicle stability control system, multiport fuel injection system/sequential multiport fuel injection system
29. **AM1 7.5 A:** Starting system
30. **P/W 25 A:** Power windows
31. **S/ROOF 25 A:** Electric moon roof

32. **TAIL 10 A:** Tail lights, parking lights, license plate lights, front fog lights, multiport fuel injection system/sequential multiport fuel injection system
33. **PANEL 10 A:** Glove box light, multi–information display, instrument cluster lights, instrument panel lights
34. **ECU–IG 10 A:** SRS airbag system, anti–lock brake system, vehicle stability control system, traction control system, brake assist system, compass, anti–glare inside rear view mirror, electric moon roof, power windows, multiplex communication system
35. **HTR 10 A:** Air conditioning system, rear window defogger, outside rear view mirror defoggers
36. **WASH 15 A:** Windshield washer
37. **S/HTR 20 A:** Seat heaters
38. **GAUGE1 10 A:** Gauges and meters, multi–information display, shift lock control system, turn signal lights, back–up lights, cruise control system, charging system, theft deterrent system, automatic transmission
39. **WIP 25 A:** Windshield wipers
40. **RAD1 20 A:** Audio system
41. **ECU–B 10 A:** Multiplex communication system (power door lock system, security system, auto–door locking system, automatic light control system, headlight delay off system, tail light auto cut system, illuminated entry system, daytime running light system, wireless remote control system), air conditioning system, front passenger occupant classification system, gauges and meters, vehicle stability control system
42. **DOME 7.5 A:** Engine switch light, interior light, personal lights, trunk light, vanity lights, wireless remote control system, multi–information display
43. **ECU ACC 7.5 A:** Power rear view mirrors, multi–information display, gauges and meters, automatic transmission, multiplex communication system
44. **CIG 15 A:** Power outlet
45. **P/POINT 15 A:** Power outlet
46. **RAD2 10 A:** Audio system
47. **MIR HTR 10 A:** Outside rear view mirror defoggers, multiport fuel injection system/sequential multiport fuel injection system

Fuses (type C)

48. **MAIN 40 A:** Headlights, daytime running light system, multiport fuel injection system/sequential multiport fuel injection system, “HEAD LH LWR”, “HEAD RH LWR”, “HEAD LH UPR”, “HEAD RH UPR” and “DRL” fuses
49. **ABS No.1 50 A:** Anti–lock brake system, vehicle stability control system, traction control system, brake assist system
50. **CDS 30 A:** Electric cooling fan
51. **RDI 30 A:** Electric cooling fan
52. **HTR 50 A:** Air conditioning system
53. **TSK 30 A (convertible):** Convertible top control system, quarter windows
54. **PWR 30 A:** Side power windows
55. **P/SEAT 30 A:** Power seats

Fuses (type D)

56. **ALT 120 A:** “HEAD LH LWR”, “HEAD RH LWR”, “DRL”, “A/C”, “AM2”, “HEAD LH UPR”, “HEAD RH UPR”, “ALT–S”, “IGN”, “IG2”, “DOOR1”, “EFI”, “HORN”, “D.C.C”, “A/F”, “ABS No.2”, “ETCS”, “HAZ”, “DEF”, “MAIN”, “ABS No.1”, “CDS”, “RDI” and “HTR (50 A)” fuses
57. **DEF 40 A:** Rear window defogger, outside rear view mirror defoggers

SECTION 9

FOR OWNERS

For owners

Reporting safety defects for U.S. owners 382
Seat belt instructions for Canadian owners (in French) 382

Reporting safety defects for U.S. owners

If you believe that your vehicle has a defect which could cause a crash or could cause injury or death, you should immediately inform the National Highway Traffic Safety Administration (NHTSA) in addition to notifying Toyota Motor Sales, U.S.A., Inc.
(Toll–free: 1–800–331–4331).

If NHTSA receives similar complaints, it may open an investigation, and if it finds that a safety defect exists in a group of vehicles, it may order a recall and remedy campaign. However, NHTSA cannot become involved in individual problems between you, your dealer, or Toyota Motor Sales, U.S.A., Inc.

To contact NHTSA, you may call the Vehicle Safety Hotline toll–free at 1–888–327–4236 (TTY: 1–800–424–9153); go to *http://www.safercar.gov*; or write to: Administrator, NHTSA, 1200 New Jersey Ave, S.E., Washington, DC 20590. You can also obtain other information about motor vehicle safety from *http://www.safercar.gov*.

Seat belt instructions for Canadian owners (in French)—

The following is a French explanation of seat belt instructions extracted from the seat belt section in this manual.

See the seat belt section for more detailed seat belt instructions in English.

—Précautions concernant les ceintures de sécurité

⚠ ATTENTION

- **Vérifiez périodiquement le dispositif des ceintures de sécurité. Vérifiez l’absence de coupures, d’élimage ou de pièces desserrées. Les pièces détériorées doivent être remplacées. Ne démontez pas ni ne modifiez le dispositif.**
- **Maintenez les ceintures en bon état de propreté. Pour les nettoyer, utilisez une solution d’eau et de savon doux ou de l’eau tiède. N’utilisez jamais de détergents, de teintures ou d’agents abrasifs, ou ne les appliquez pas sur les ceintures—ces produits pourraient considérablement affaiblir les ceintures.**

—Utilisation des ceintures de sécurité avant et arrière

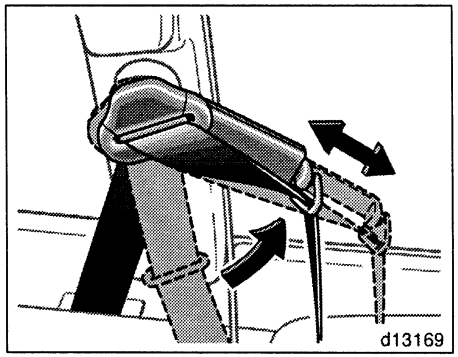

UTILISATION DES PASSANTS DE CEINTURES DE SECURITE AVANT (coupé)

Montez le passant de ceinture de sécurité avant jusqu’à verrouillage avant d’attacher la ceinture de sécurité avant. Puis réglez la longueur du passant en le tirant ou en le poussant.

Vous devez percevoir un clic de verrouillage lorsque le passant de la ceinture de sécurité est verrouillé en position haute.

⚠ ATTENTION

Assurez-vous que le passant de la ceinture de sécurité avant est fixé en position haute avant de boucler votre ceinture de sécurité. Sinon, la ceinture de sécurité risque ne pas remplir correctement son office.

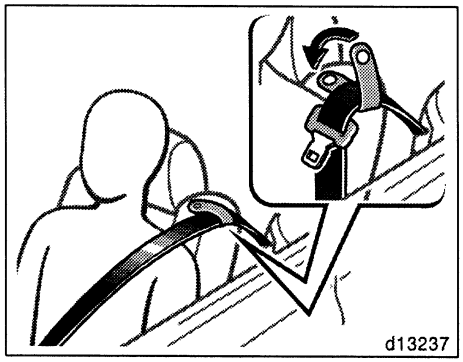

UTILISATION DES PASSANTS DE CEINTURES DE SECURITE AVANT (cabriolet)

Les passants permettent de maintenir la ceinture de sécurité dans la position la plus appropriée. Ils peuvent également être utilisés pour saisir plus facilement la ceinture de sécurité.

Pour utiliser le passant, détachez-en l'aimant. Placez la ceinture de sécurité dans le passant et rattachez-le au moyen de l'aimant.

⚠ ATTENTION

- **Assurez-vous de toujours bien positionner la sangle diagonale sur votre épaule, sans jamais la coller à votre cou. Utilisez le passant pour positionner la ceinture si nécessaire. A défaut de correctement positionner la ceinture, le niveau de protection en cas d'accident s'en trouverait réduit, ce qui pourrait entraîner de graves voire mortelles blessures en cas de choc.**
- **Assurez-vous que les sangles ne soient jamais vrillées et qu'elles coulissent librement dans le passant, si ce dernier est utilisé.**
- **Positionnez toujours les sangles de ceinture de sécurité près du corps, ajustez les passants et la position du siège afin d'assurer un port correct et confortable de la ceinture de sécurité.**

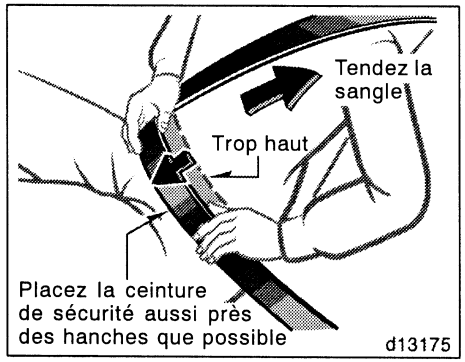

Réglez la position des sangles abdominale et diagonale.

Placez la sangle abdominale aussi bas que possible sur les hanches—non autour de la taille, puis réglez-la de façon serrée en tirant vers le haut la partie de la sangle diagonale qui passe à travers l'attache.

⚠ ATTENTION

- **A la fois réglée trop haut et mal ajustée, la ceinture abdominale peut blesser grièvement, voire même mortellement, par effet de sous-marinage (le corps glisse sous la ceinture) lors d’une collision ou de toute situation d’urgence. Veillez à ce que la sangle abdominale soit toujours positionnée le plus bas possible sur les hanches.**
- **Ne passez pas la sangle diagonale sous votre bras.**

SECTION 10

INDEX

Index

hU¿9

Quick index

- If a service reminder indicator or warning buzzer comes on 133
- If your vehicle will not start 300
- If your engine stalls while driving 303
- If your vehicle overheats 304
- If you have a flat tire 305
- If your vehicle needs to be towed 315
- Tips for driving during break–in period 258
- How to start the engine 290
- General maintenance 331

Gas station information

Fuel type:

UNLEADED gasoline, Octane Rating 87 (Research Octane Number 91) or higher

See page 258 for detailed information.

Fuel tank capacity:
70 L (18.5 gal., 15.4 Imp. gal.)

Engine oil:
ILSAC multigrade engine oil is recommended.

See page 345 for detailed information.

Tire information: See pages 349 through 358.

Tire inflation pressure: See page 377.

Publication No. OM33810U
Part No. 01999-33810
Printed in Japan 01–0802–00 C
¿¿¿ ¿¿¿¿ (¿¿U)

A

Adding washer fluid 363
Adjustment
Front seats 46,47
Seat belt 52
Air conditioning filter 233
Air conditioning system
Automatic air conditioning system 226
Manual air conditioning system 220
Airbags 61,67,73,81
All window control switches 24
Aluminum wheel precautions 358
Anti–glare inside rear view mirror 110
Anti–lock brake system warning light (brake assist system warning light) 133
Anti–theft steering column lock 144
Appearance care
Cleaning the interior 327
Protecting your Toyota from corrosion 322
Washing and waxing 323
Ashtray 245
Audio remote controls 180
Audio system 168
Audio system
AUX 181
Audio system operating tips 182
Auto anti–glare inside rear view mirror
Compass 241
Automatic air conditioning system 226
Automatic door locking and unlocking functions 23
Automatic transmission
Driving with an automatic transmission 146
Shift lock override button 318
Shift pattern 146
Shifting speed 146
AUX 181
Auxiliary boxes 252
Auxiliary catch, Engine hood 30

B

Battery
Checking battery condition 360
Gas caution 360
Handling safety 360
Recharging precautions 361
Winter driving tips 293
Before starting the engine 290
Bluetooth® 189
Brake pad wear limit indicators 268
Brake system 264
Brake system warning light 133
Brakes
Fluid level 348
Pad wear limit indicators 268
Parking 162
Break–in tips 258
Brightness control 123

C

Carbon monoxide caution 262
Cargo and luggage
Capacity 284
Capacity and distribution 285
Stowage precautions 285
Cargo net 255
Certification label 268
Charging system warning light 133
Checking and replacing fuses 362
Checking and replacing the air conditioning filter 233
Checking brake fluid 348
Checking the engine oil level 344
Checking the radiator and condenser 347
Child restraint
Child restraint system 87
Installation 88
Installation with child restraint lower anchorages 102,103
Precautions 85
Types of child restraint system 87
Using a top strap 98,100
Cigarette lighter 245
Cleaning the interior 327
Clock 241
Cold weather
Operation 293
Compact disc changer 168
Compact disc changer controller 168
Compact disc player 168
Compass 241
Condenser
Checking the condenser 347

Console box
Rear 253
Controls, Instrument panel 2,7
Controls, steering switches 6
Convertible top
Convertible top 36
If the convertible top does not rise or lower 319
Cooling system
Coolant level 346
Engine overheating 304
Radiator and reservoir 346
Radiator cap 304
Winter driving tips 293
Corrosion prevention 322
Cruise control 163
Cruise information display 239
Cup holders 254

D

Defogger
Outside rear view mirror 127
Rear window 127
Dimmer switch, Headlight 116,119
Dinghy towing 294
Directional signals 116,119
Do–it–yourself maintenance
Parts and tools 341
Service precautions 338
Does your vehicle need repairing? 333
Doors
Side doors 21
Driver’s seat belt reminder buzzer 133
Driver’s seat belt reminder light 133
Driving
Automatic transmission 146
Driving tips 290
Manual transmission 150
Driving in the rain 292
Driving tips
Driving in the rain 292
Driving tips in various conditions 291
Driving with a manual transmission 150
Driving with an automatic transmission 146
Economical driving 296
Good driving practice 146,150
Winter driving tips 293
During
Break–in 258

E

Economical driving
Saving money on both fuel and repairs 296
Electric moon roof 34
Electrical system
Battery 360,361
Fuse locations 338
Fuses 362
Emergency flasher switch 122
Emergency, In case of
Blown fuse 362
Emergency flasher switch 122
Flat tire 305
If the convertible top does not rise or lower 319
If you cannot increase engine speed 304
If you cannot shift automatic transmission selector lever 318
If you lose your keys 320
If you lose your wireless remote control transmitter 320
If your engine stalls while driving 303
If your vehicle becomes stuck 315
If your vehicle needs to be towed 315
If your vehicle will not start 300
Jump starting 301
Overheating 304
Towing 315
Emissions Inspection and Maintenance (I/M) programs 334
Engine
Before starting the engine 290
Checking the coolant level 346
Emission control device 261
Engine compartment 336
Exhaust gas caution 262
Hood release 30
Identification number 269
Oil consumption 263
Oil level 344
Overheating 304
Starting procedure 290
Three–way catalytic converter 261
Engine coolant
Temperature gauge 130
Winter driving tips 293

Engine coolant temperature gauge 130
Engine immobilizer system 14
Engine oil
Winter driving tips 293
Engine oil replacement reminder light 133
Engine switch 144
Exhaust gas caution 262

F

Facts about engine oil consumption 263
Flasher, Headlight 116,119
Flat tire
After changing wheels 314
Changing tire 311
If you have a flat tire 305
Jack point 310
Jacking precautions 305
Jacking up 311
Loosening wheel nuts 310
Lowering vehicle 313
Reinstalling wheel ornament 313
Removing wheel ornament 309
Wheel block 309
Wheel nuts 312
Floor mat 256
Fluid level
Brake 348
Power steering 348
Washer fluid 363
Fog light switch, Front 123
Fold–down rear seat 49
Foreign countries, Operation in 260
Front fog light switch 123
Front passenger occupant classification system 81
Front passenger’s seat belt reminder buzzer 133
Front passenger’s seat belt reminder light 133
Front seat
Rear seat entry 48
Front seats 45,46,47
Fuel
Filler door opener 32
Fuel economy 296
Fuel pump shut off system 260
Gauge 130
Operation in foreign countries 260
Tank cap 32
Fuel information 258
Fuel pump shut off system 260
Fuse
Fuse box 362
Fuse locations 338

G

Garage door opener 247
Gauge
Engine coolant temperature 130
Fuel 130
Glove box 252
Good driving practice 146,150
Grocery bag hooks 255

H

Hands–free phone system 189
Hazard switch 122
Head restraints 51
Headlight beam level control dial 121
Headlight switch 116,119
High speed operation
During break–in 258
Hood release, Engine 30
How to start the engine 290

I

I/M test 334
Identification
Engine 269
Tire 274
Vehicle 268
Ignition switch 144
Ignition switch light 124
Indicator symbols 8
Instrument panel
Brightness control 123
Fuel gauge 130
Indicator symbols 8
Odometer 131
Tachometer 131
Trip meter 131
Instrument panel light control 123
Instrument panel overview 2,7
Internal trunk release handle 29

J

Jack
Location 307
Jack, Audio
AUX 181
Jump starting 301

K

Key reminder buzzer 133
Keys 12,320

L

Light bulbs
Back−up light 370
Front fog light 370
Front side marker light 370
Front turn signal light 370
Headlight 365,367
High mounted stoplight 369
License plate lights 369
Parking light 370
Rear turn signal light 368
Light bulbs, Replacing 364
Light, Interior
Ignition switch light 124
Interior light 123
Personal light 125
Quarter trim courtesy light 124
Load capacity 284
Lock
Internal trunk release handle 29
Side doors 21
Steering column 144
Trunk lid 28
Low engine oil pressure
warning light 133
Low fuel level warning light 133
Low tire pressure warning light 155
Low windshield washer fluid level
warning light 133
Luggage security system 28

M

Maintenance
Do−it−yourself maintenance 338
Does your vehicle need
repairing? 333
General maintenance 331
Maintenance requirements 330
Parts and tools 341
Where to go for service 330
Malfunction indicator lamp 334
Malfunction indicator lamp
Emissions Inspection and
Maintenance (I/M) programs 133
Service reminder indicator 133
Manual air conditioning system 220
Manual transmission
Driving with a manual
transmission 150
Shift pattern 150
Shifting speed 150
Maximum allowable speed
Automatic transmission 146
Manual transmission 150
Mirror
Anti−glare inside rear view 110
Auto anti−glare inside rear view 111
Mirrors
Outside rear view 109
Power rear view 110
Vanity 113
Moon roof 34
Multi−information displays 238

N

New vehicle break−in 258

O

Odometer 131
Oil
Consumption 263
Power steering 348
Viscosity and grade 344
Oil consumption 263
Open door warning light 133
Operation in foreign countries 260
Outside temperature display 241
Overheating, Engine 304
Overheating, Engine coolant 130
Overview
Engine compartment 336

P

Parking brake
Operation 162
Reminder light 162
Polishing 323
Positioning a floor jack 340
Power outlet 246
Power rear view mirror control 110
Power steering
Fluid level 348
Power window switches 24
Preloaders
(seat belt pretensioners) 58
Pretensioners
(seat belt pretensioners) 58
Protecting your Toyota from
corrosion 322

Q

Quarter trim courtesy light 124
Quarter windows 24

R

Radiator
Checking the radiator 347
Coolant, Engine 346
Radio 168
Rear console box 253
Rear seat
Fold–down 49
Rear view mirror
Anti–glare inside 110
Rear view mirror, auto anti–glare
inside 111
Rear view mirrors
Outside 109
Power 110
Rear window and outside rear view
mirror defogger switch 127
Reporting safety defects for U.S.
owners 382

S

Satellite radio controller 168
Seat adjustment precautions
Front seats 45
Seat belt extender 56
Seat belts
Cleaning 327
Fastening 52
Seat belt precautions 52
Seat belt pretensioners 58
Seat heater switches 50
Seating capacity 284
Seats 44
Service and maintenance 330
Side door locks 21
Side door locks
Automatic locking and
unlocking functions 23
Side doors 21
Side doors
Automatic locking and
unlocking functions 23
Side vents 233
Side windows 24
Spare fuse 362
Spare tire 307
Spark plugs
Iridium–tipped spark plugs 264
Specifications 372
SRS driver airbag and front
passenger airbag 61
SRS side airbags 67
SRS side airbags and curtain
shield airbags 73
SRS warning light 133
Starting
Cold weather 290
Engine 290
Jump starting 301
Steering
Adjusting steering wheel 108
Steering switches overview 6
Steering switches, Audio remote
control 180
Storage box 255
Sun visors 112
Suspension and chassis 270
Switch
Emergency flasher 122
Engine 144
Headlight, dimmer and turn
signal 116,119
Ignition 144
Outside rear view mirror
defogger 127
Rear window defogger 127
Windshield wiper and washer 126

T

Tachometer 131
Telescopic steering column 108
Theft deterrent system 30
Theft prevention labels 270
Three–way catalytic converter 261
Tilt steering wheel 108
Tire pressure warning light 133
Tire pressure warning system 155
Tires
  Changing 305
  Checking and replacing 352
  Flat tire 305
  Glossary 278
  Inflation pressure 349,377
  Replacing wheels 357
  Rotating tires 354
  Size 275,377
  Snow tires and chains 355
  Spare 307
  Symbols 271,273
  Tire Identification Number (TIN) 274
Tools 307
Towing
  Dinghy towing 294
  Emergency towing 317
  If your vehicle needs to be towed 315
  Trailer 295
Traction control system 151
Trailer towing 295
Trip meter 131
Trunk lid 28
Turn signals 116,119
Types of tires 287

U

Uniform tire quality grading 276

V

Vanity mirrors 113
Vehicle identification number 268
Vehicle stability control system 154
Vehicle stability control system
  warning light 133

W

Washer fluid
  Adding washer fluid 363
Washing and waxing 323
Wheels
  Aluminum wheel 358
  Replacing wheels 357
Windshield wiper and washer
  switch 126
Winter driving tips 293
Wireless remote control 16,320