Foreword

Welcome to the growing group of value–conscious people who drive Toyotas. We are proud of the advanced engineering and quality construction of each vehicle we build.

This Owner’s Manual explains the operation of your new Toyota. Please read it thoroughly and have all the occupants follow the instructions carefully. Doing so will help you enjoy many years of safe and trouble–free motoring. For important information about this manual and your Toyota, read the following pages carefully.

When it comes to service, remember that your Toyota dealer knows your vehicle very well and is interested in your complete satisfaction. Your Toyota dealer will provide quality maintenance and any other assistance you may require.

If there is not a Toyota dealer near you, please call the following number:

U.S. OWNERS:
- When traveling in the U.S. mainland or Canada:
  Toyota Customer Experience Center **Toll–free:1–800–331–4331**
- Hawaii:
  Servco Automotive Customer Services **Toll–free:1–888–272–5515**

CANADIAN OWNERS:
- When traveling in Canada or the U.S. mainland:
  Toyota Canada Customer Interaction Centre **Toll–free:1–888–TOYOTA–8 or 1–888–869–6828**

Please leave this Owner’s Manual in this vehicle at the time of resale. The next owner will need this information also.

All information and specifications in this manual are current at the time of printing. However, because of Toyota’s policy of continual product improvement, we reserve the right to make changes at any time without notice.

Please note that this manual applies to all models and explains all equipment, including options. Therefore, you may find some explanations for equipment not installed on your vehicle.

Please access our websites for further information.

- The U.S. mainland **www.toyota.com**
- Hawaii **www.toyotahawaii.com**
- Canada **www.toyota.ca**

TOYOTA MOTOR CORPORATION

© 2006 TOYOTA MOTOR CORPORATION

All rights reserved. This material may not be reproduced or copied, in whole or in part, without the written permission of Toyota Motor Corporation.

Important information about your Toyota

Occupant restraint systems

Toyota encourages you and your family to take the time to read Section 1–3 of this Owner’s Manual carefully. In terms of helping you understand how you can receive the maximum benefit of the occupant restraint systems this vehicle provides, Section 1–3 of this Owner’s Manual is the most important Section for you and your family to read.

Section 1–3 describes the function and operation concerning seats, seat belts, SRS airbags and child restraint systems of this vehicle and some potential hazards you should be aware of. These systems work together along with the overall structure of this vehicle in order to provide occupant restraint in the event of a crash. The effect of each system is enhanced when it is used properly and together with other systems. No single occupant restraint system can, by itself, provide you or your family with the equal level of restraint which these systems can provide when used together. That is why it is important for you and your family to understand the purpose and proper use of each of these systems and how they relate to each other.

The purpose of all occupant restraint systems is to help reduce the possibility of death or serious injury in the event of a collision. None of these systems, either individually or together, can ensure that there is no injury in the event of collision. However, the more you know about these systems and how to use them properly, the greater your chances become of surviving an accident without death or serious injury.

Seat belts provide the primary restraint to all occupants of the vehicle, and every occupant of the vehicle should wear seat belts properly at all times. Children should always be secured in child restraint systems that are appropriate for their age and size. SRS (Supplemental Restraint System) airbags are, as their names imply, designed to work with, and be supplemental to, seat belts and are not substitutes for them. SRS airbags can be very effective in reducing the risk of head, chest and knee injuries by preventing contact of the head, chest and knee with interior portions of the vehicle.

In order to be effective, the SRS airbags must deploy with tremendous speed. The rapid deployment of the SRS airbags makes the SRS airbags themselves potential sources of death or serious injury if an occupant is too close to an airbag, or if an object or some part of his or her body has been placed between the occupant and the airbag at the time of deployment. This is just one example of how the instructions in Section 1–3 of this Owner’s Manual will help ensure proper use of the occupant restraint systems, and increase the safety they can provide to you and your family in the event of an accident.

Toyota recommends you to read the provisions in Section 1–3 carefully and refer to them as needed during your time of ownership of this vehicle.

Event data recorder

Your vehicle has computers that monitor and control certain aspects of your vehicle. These computers assist in driving and maintaining optimal vehicle performance. Besides storing data useful for troubleshooting, there is a system to record data in a crash or a near car crash event. This is called an Event Data Recorder (EDR).

The SRS airbag sensor assembly contains the EDR. In a crash or a near car crash event, this device may record some or all of the following information:

- Engine speed
- Whether the brake pedal was applied or not
- Vehicle speed
- To what extent the accelerator pedal was depressed
- Position of the transmission selector lever
- Whether the driver and front passenger wore the seat belts or not
- Driver’s seat position
- Front passenger’s occupant classification

- SRS airbag deployment data
- SRS airbag system diagnostic data

If your vehicle is equipped with a vehicle stability control (VSC) system, its Electronic Control Unit (ECU) may contain another EDR. There are a variety of driving situations which include activating the VSC under which the VSC EDR will record certain information. The VSC EDR may record some or all of the following information:

- Behavior of the vehicle
- Steering wheel angle
- Vehicle speed
- To what extent the accelerator pedal was depressed
- To what extent the brake pedal was applied
- To what extent the ECU controlled the condition of the 4 wheels
- Vehicle stability control system diagnostic data

The information above is intended to be used for the purpose of improving vehicle safety performance. Unlike general data recorders, the EDR does not record sound data such as conversation between passengers.

Toyota will not disclose the data recorded in an EDR to a third party except when:

- An agreement from the vehicle’s owner (or the leasing company for a leased vehicle) is obtained
- Officially requested by the police or other authorities
- Used as a defense for Toyota in a law suit
- Ordered by the court

However, if necessary Toyota will:

- Use the data for research on Toyota vehicle safety performance
- Disclose the data to a third party for research purposes without disclosing details of the vehicle owner, and only when it is deemed necessary
- Disclose summarized data cleared of vehicle identification information to a non–Toyota organization for research purposes

New vehicle warranty

Your new vehicle is covered by the following Toyota limited warranties:

- New vehicle warranty
- Emission control systems warranty
- Others

For further information, please refer to the “Owner’s Warranty Information Booklet” or “Owner’s Manual Supplement”.

Your responsibility for maintenance

It is the owner’s responsibility to make sure that the specified maintenance is performed. Section 6 gives details of these maintenance requirements. Also included in Section 6 is general maintenance. For scheduled maintenance information, please refer to the “Scheduled Maintenance Guide” or “Owner’s Manual Supplement”.

Important health and safety information about your Toyota

⚠ CAUTION

- **WARNING: Engine exhaust, some of its constituents, and a wide variety of automobile components contain or emit chemicals known to the State of California to cause cancer and birth defects and other reproductive harm. In addition, oils, fuels and fluids contained in vehicles as well as waste produced by component wear contain or emit chemicals known to the State of California to cause cancer and birth defects or other reproductive harm.**
- **Battery posts, terminals and related accessories contain lead and lead compounds. Wash your hands after handling. Used engine oil contains chemicals that have caused cancer in laboratory animals. Always protect your skin by washing thoroughly with soap and water.**

Accessories, spare parts and modification of your Toyota

A wide variety of non–genuine spare parts and accessories for Toyota vehicles are currently available in the market. You should know that Toyota does not warrant these products and is not responsible for their performance, repair, or replacement, or for any damage they may cause to, or adverse effect they may have on, your Toyota vehicle.

This vehicle should not be modified with non–genuine Toyota products. Modification with non–genuine Toyota products could affect its performance, safety or durability, and may even violate governmental regulations. In addition, damage or performance problems resulting from the modification may not be covered under warranty.

Spark ignition system of your Toyota

The spark ignition system in your Toyota meets all requirements of the Canadian Interference–Causing Equipment Standard.

Installation of a mobile two–way radio system

As the installation of a mobile two–way radio system in your vehicle could affect electronic systems such as multiport fuel injection system/sequential multiport fuel injection system, electronic throttle control system, cruise control system, anti–lock brake system, traction control system, vehicle stability control system, SRS airbag system and seat belt pretensioner system, be sure to check with your Toyota dealer for precautionary measures or special instructions regarding installation.

Smart key system

Users of any electrical medical devices such as implanted pacemakers should consult the manufacturer of the device for information about its operation under the influence of radio waves. Radio waves could have unexpected effects on the operation of such medical devices. For details, see “Keys” on page 16 in Section 1–2.

Tires and loading on your Toyota

Underinflated or overinflated tire pressure and the excess load may result in the deterioration of steering ability and braking ability, leading to an accident. Check the tire inflation pressure periodically and be sure to keep the load limits given in this Owner’s Manual. For details about tire inflation pressure and load limits, see pages 385 and 310.

Leak detection pump

This pump performs fuel evaporation leakage check. This check is done approximately five hours after the engine is turned off. So you may hear sound coming from underneath the luggage compartment for several minutes. It does not indicate a malfunction.

Scrapping of your Toyota

The SRS airbag and seat belt pretensioner devices in your Toyota contain explosive chemicals. If the vehicle is scrapped with the airbags and pretensioners left as they are, this may cause an accident such as fire. Be sure to have the systems of the SRS airbag and seat belt pretensioner removed and disposed of by the qualified service shop or by your Toyota dealer before you dispose of your vehicle.

Perchlorate Material

Special handling may apply,
See www.dtsc.ca.gov/hazardouswaste/perchlorate.

Your vehicle has components that may contain perchlorate. These components may include airbag, seat belt pretensioners, and wireless remote control batteries.

Important information about this manual

Safety and vehicle damage warnings

Throughout this manual, you will see safety and vehicle damage warnings. You must follow these warnings carefully to avoid possible injury or damage.

The types of warnings, what they look like, and how they are used in this manual are explained as follows:

⚠ CAUTION

This is a warning against anything which may cause injury to people if the warning is ignored. You are informed about what you must or must not do in order to reduce the risk of injury to yourself and others.

NOTICE

This is a warning against anything which may cause damage to the vehicle or its equipment if the warning is ignored. You are informed about what you must or must not do in order to avoid or reduce the risk of damage to your vehicle and its equipment.

Safety symbol

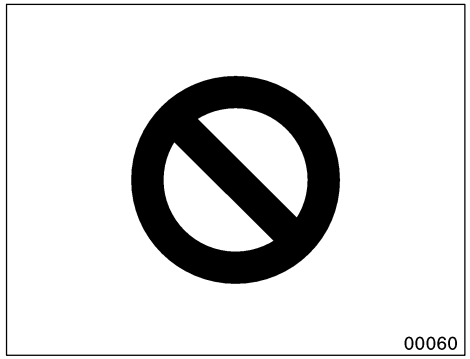

When you see the safety symbol shown above, it means: “Do not...”; “Do not do this”; or “Do not let this happen”.

SECTION 1 – 1

OPERATION OF INSTRUMENTS AND CONTROLS

Overview of instruments and controls

Instrument panel overview 2
Steering switches and overhead console overview 6
Instrument cluster overview 8
Indicator symbols on the instrument panel 10

Instrument panel overview

▶Manual transmission models

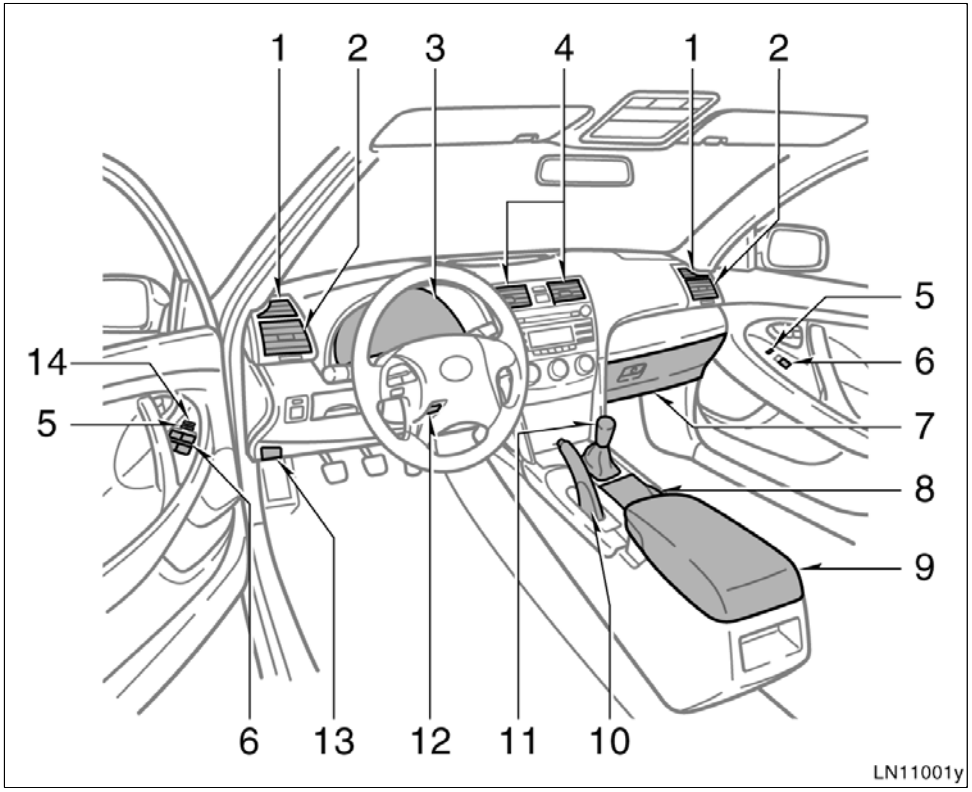

1. Side defroster outlets
2. Side vents
3. Instrument cluster
4. Center vents
5. Power door lock switches
6. Power window switches
7. Glove box
8. Cup holder
9. Rear console box
10. Parking brake lever
11. Manual transmission gear shift lever
12. Tilt and telescopic steering wheel lock release lever
13. Hood lock release lever
14. Window lock switch

▶Automatic transmission models

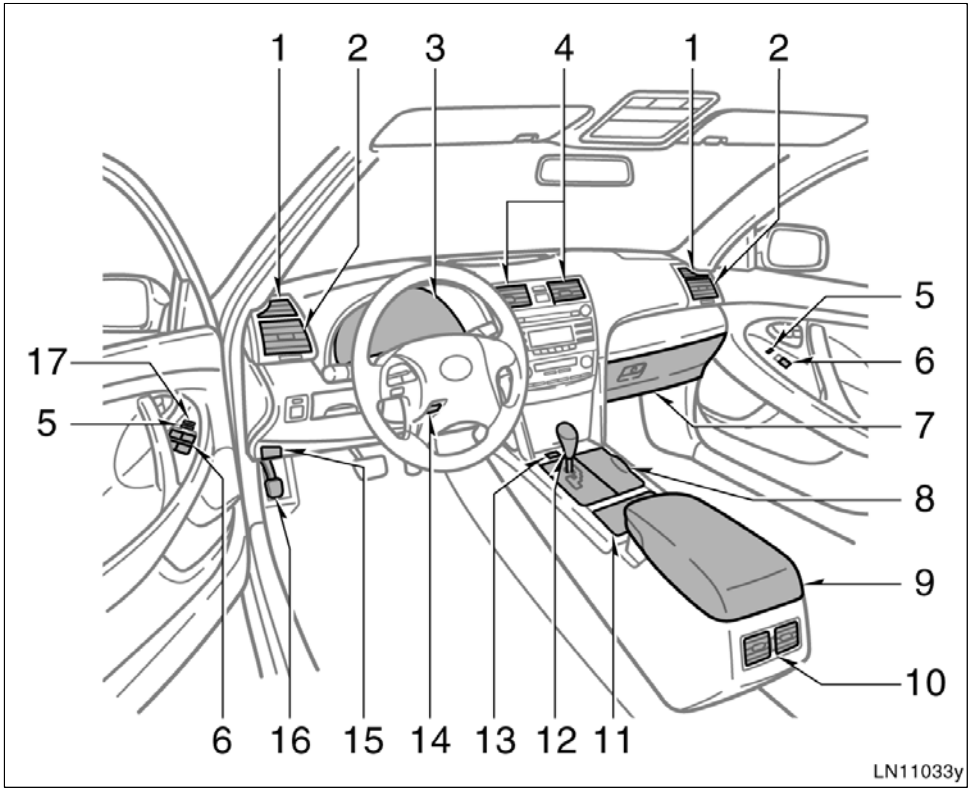

1. Side defroster outlets
2. Side vents
3. Instrument cluster
4. Center vents
5. Power door lock switches
6. Power window switches
7. Glove box
8. Cup holder
9. Rear console box
10. Rear vents
11. Auxiliary box and/or power outlet
12. Automatic transmission selector lever
13. Seat heater switches
14. Tilt and telescopic steering wheel lock release lever
15. Hood lock release lever
16. Parking brake pedal
17. Window lock switch

▶With manual air conditioning controls

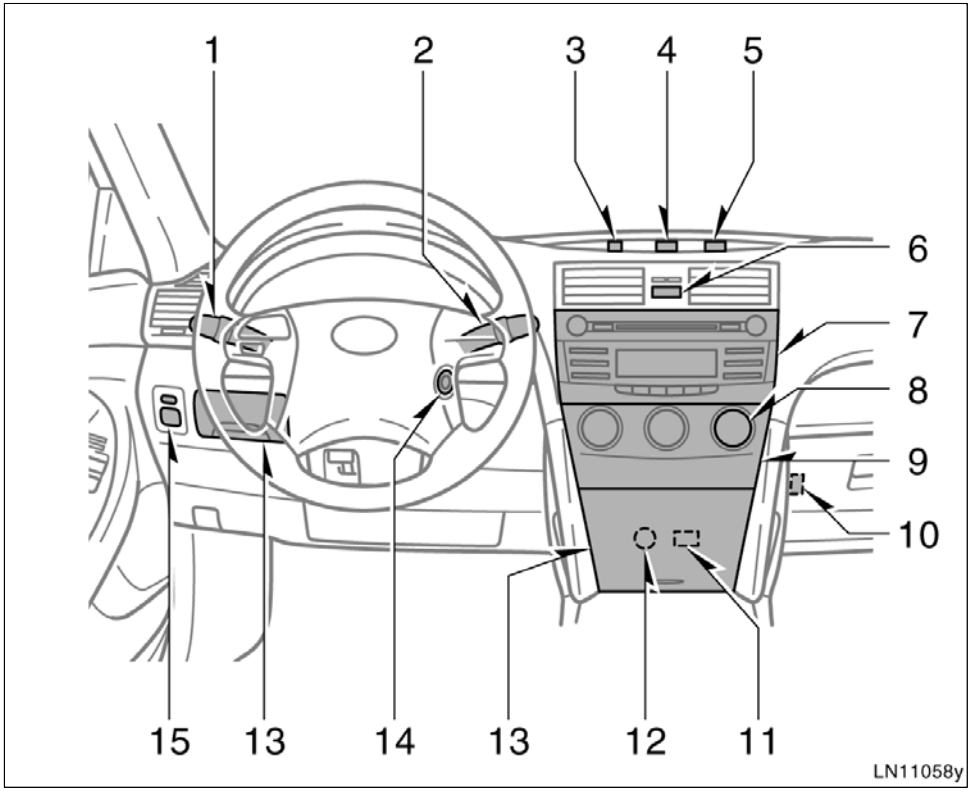

1. Headlight, turn signal and front fog light switches
2. Wiper and washer switches
3. Theft deterrent system/engine immobilizer system indicator light
4. Clock
5. “AIRBAG ON” and “AIRBAG OFF” indicator lights and front passenger’s seat belt reminder light
6. Emergency flasher switch
7. Audio system or navigation system including audio system (For the navigation system, see the separate “Navigation System Owner’s Manual”.)
8. Rear window and outside rear view mirror defogger switch
9. Air conditioning controls
10. Tire pressure warning system reset switch
11. AUX adapter
12. Power outlet
13. Auxiliary boxes
14. Ignition switch
15. Power rear view mirror control switches

▶With automatic air conditioning controls

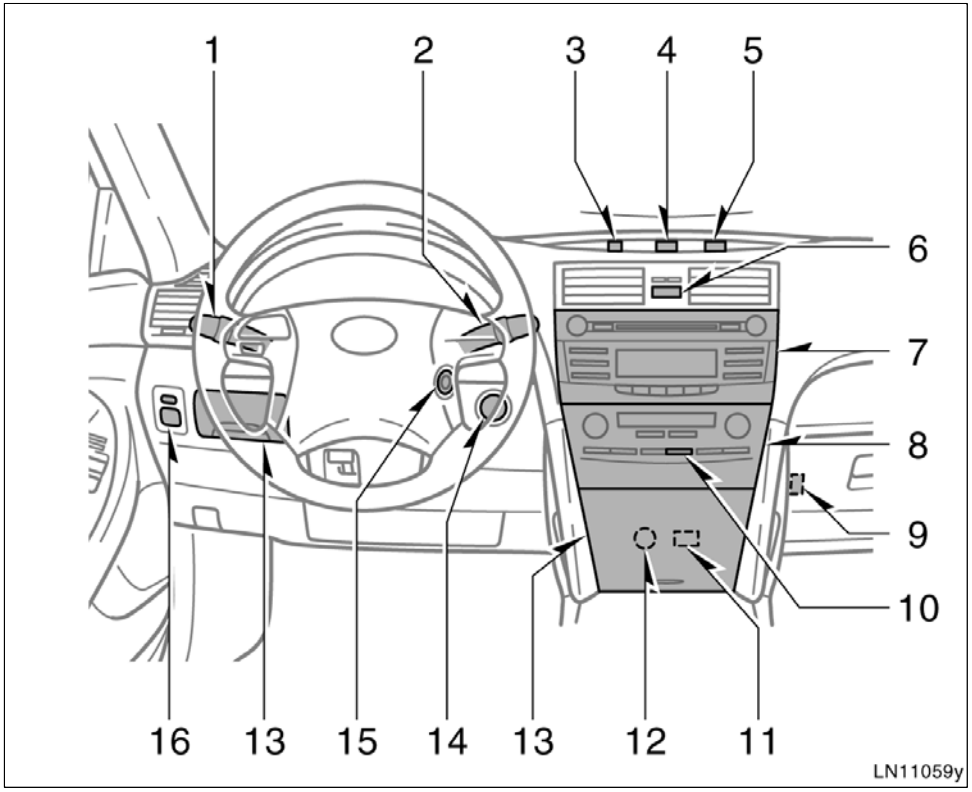

1. Headlight, turn signal and front fog light switches
2. Wiper and washer switches
3. Theft deterrent system/engine immobilizer system indicator light
4. Clock
5. “AIRBAG ON” and “AIRBAG OFF” indicator lights and front passenger’s seat belt reminder light
6. Emergency flasher switch
7. Audio system or navigation system including audio system (For the navigation system, see the separate “Navigation System Owner’s Manual”.)
8. Air conditioning controls
9. Tire pressure warning system reset switch
10. Rear window and outside rear view mirror defogger switch
11. AUX adapter
12. Power outlet
13. Auxiliary boxes
14. Ignition switch (with smart key system)
15. Ignition switch (with key cylinder type ignition switch)
16. Power rear view mirror control switches

Steering switches and overhead console overview

▶Steering switches

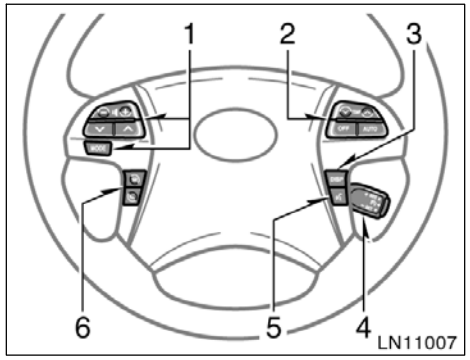

Type A

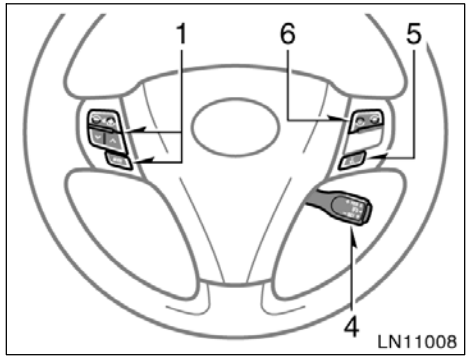

Type B

1. Audio remote control switches
2. Climate remote control switches
3. Multi–information display control switch
4. Cruise control switch
5. Speech command switch
6. Telephone switches

▶Overhead console

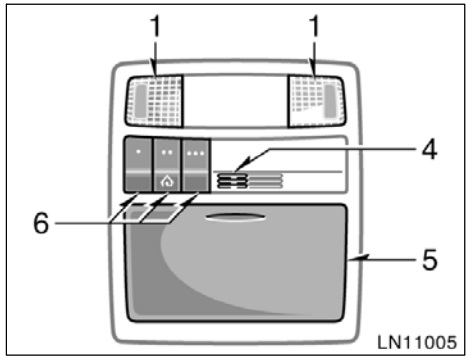

Without moon roof

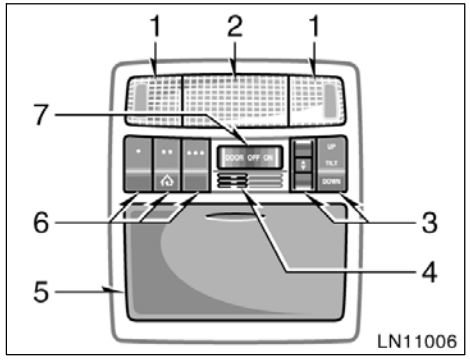

With moon roof

1. Personal lights
2. Interior light
3. Moon roof switches
4. Microphone
5. Auxiliary box
6. Garage door opener
7. Interior light switch

Instrument cluster overview

▶Without multi–information display

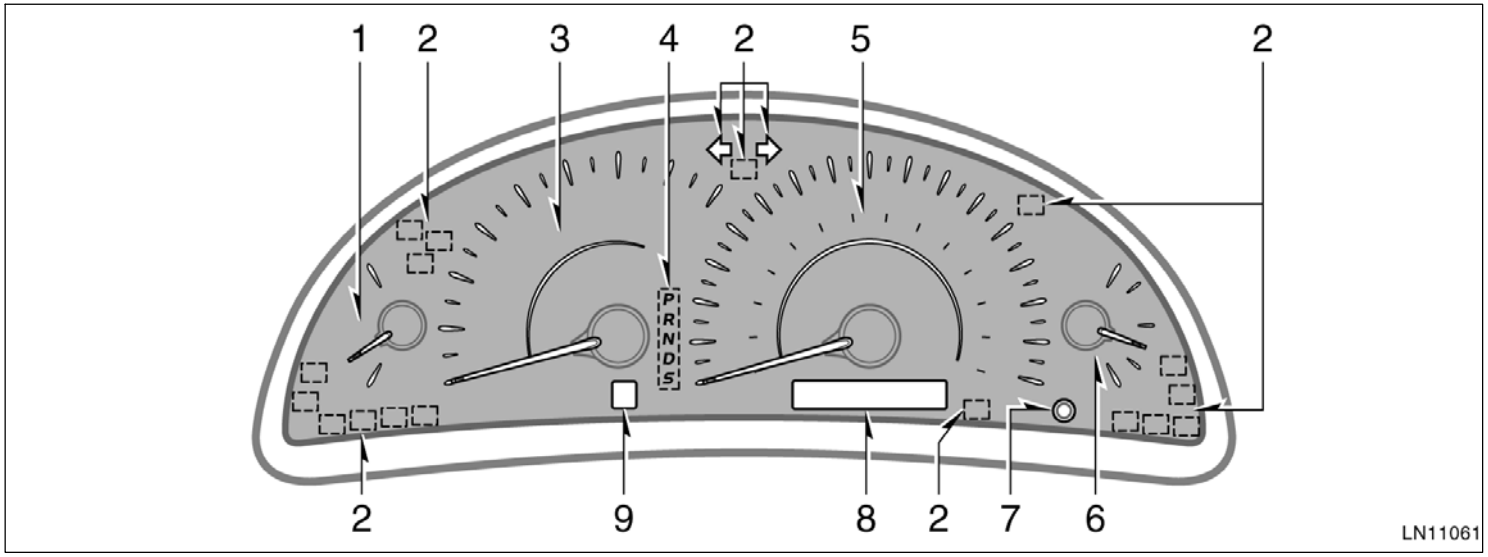

1. Engine coolant temperature gauge
2. Service reminder indicators and indicator lights
3. Tachometer
4. Automatic transmission shift position indicator lights
5. Speedometer
6. Fuel gauge
7. Trip meter reset knob/instrument panel light control knob
8. Odometer and two trip meters and outside temperature display
9. Automatic transmission shift range display

▶With multi–information display

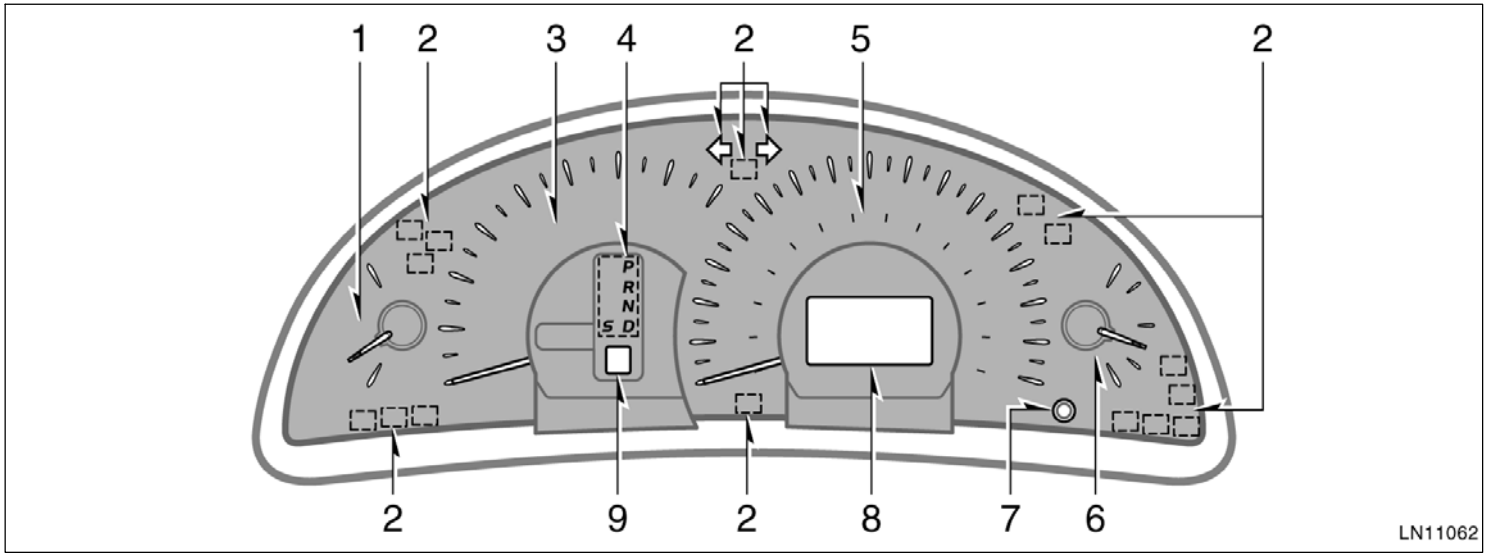

1. Engine coolant temperature gauge
2. Service reminder indicators and indicator lights
3. Tachometer
4. Automatic transmission shift position indicator lights
5. Speedometer
6. Fuel gauge
7. Trip meter reset knob/instrument panel light control knob
8. Multi–information display
9. Automatic transmission shift range display

Indicator symbols on the instrument panel

BRAKE or	Brake system warning light*1
	Driver’s seat belt reminder light*1
PASSENGER	Front passenger’s seat belt reminder light*1
	Charging system warning light*1
CHECK or	Malfunction indicator lamp*1
	Low fuel level warning light*1

	Low engine oil pressure warning light*1
ABS or	Anti–lock brake system warning light*1
	Open door warning light*1
	SRS warning light*1
	Low windshield washer fluid level warning light*1
VSC	Vehicle stability control system and traction control system warning light*1
	Low tire pressure warning light*1

	Master warning light*1
MAINT REQD	Engine oil replacement reminder light*1
AIRBAG ON	“AIRBAG ON” indicator light
AIRBAG OFF	“AIRBAG OFF” indicator light
	Headlight indicator light
	Tail light indicator light
	Headlight high beam indicator light
	Turn signal indicator lights

	Front fog light indicator light
	Slip indicator light
	Cruise control indicator light*2

*1: For details, see “Service reminder indicators and warning buzzers” on page 146 in Section 1–6.

*2: If this light flashes, see “Cruise control” on page 181 in Section 1–7.

SECTION 1 – 2

OPERATION OF INSTRUMENTS AND CONTROLS

Keys and Doors

Keys 14
Engine immobilizer system 18
Wireless remote control 20
Smart key system 30
Side doors 36
Power windows 43
Trunk lid 46
Hood 49
Theft deterrent system 49
Fuel tank cap 51
Electric moon roof 53

Keys (with key cylinder–type ignition switch)

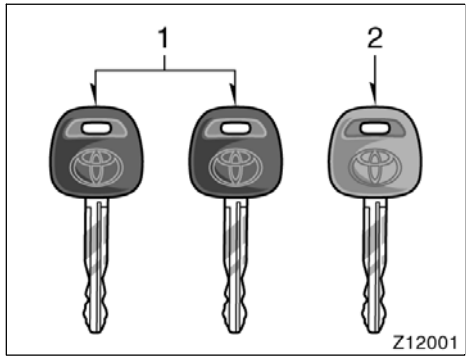

Type A

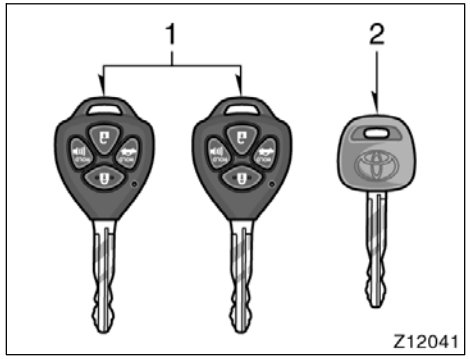

Type B

Your vehicle is supplied with two kinds of keys.

1. Master keys (black)—

   These keys work in every lock. Your Toyota dealer will need one of them to make a new key with a built–in transponder chip.

   Since the doors and trunk lid can be locked without a key, you should always carry a spare master key in case you accidentally lock your keys inside the vehicle.

   Type B only—This key is fitted with the wireless remote control transmitter. For information on use of the wireless remote control transmitter, see “Wireless remote control” on page 20 in this Section.

2. Sub key (gray)—

   This key will not work in the glove box, trunk and the door located behind the rear seat armrest (on some models).

   To protect items locked in the trunk or glove box when using valet parking, leave the sub key with the attendant.

A transponder chip for engine immobilizer system has been placed in the head of the master and sub keys. These chips are needed to enable the system to function correctly, so be careful not to lose these keys. If you make your own duplicate key, you will not be able to cancel the system or start the engine.

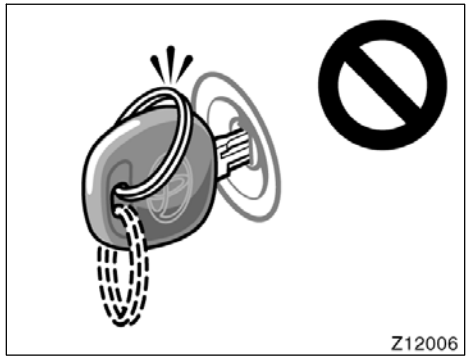

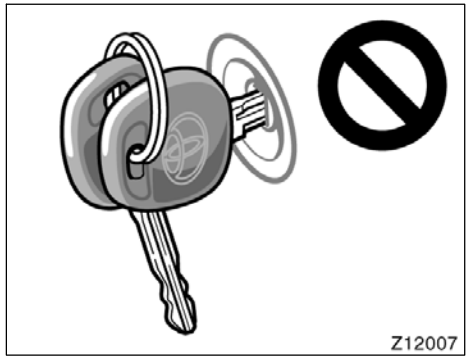

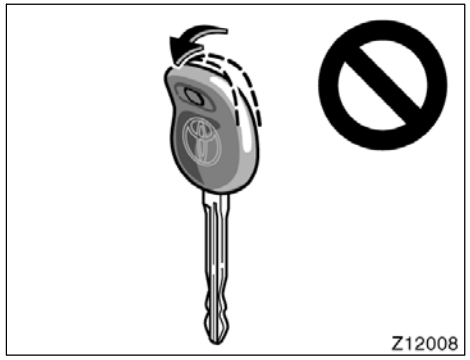

NOTICE

When using a key containing a transponder chip, observe the following precautions:

- ***When starting the engine, do not use the key with a key ring resting on the key grip and do not press the key ring against the key grip. Otherwise the engine may not start, or may stop soon after it starts.***

- ***When starting the engine, do not use the key with other transponder keys around (including keys of other vehicles) and do not press other key plates against the key grip. Otherwise the engine may not start, or may stop soon after it starts. If this happens, remove the key once and then insert it again after removing other transponder keys (including keys of other vehicles) from the ring or while gripping or covering them with your hand to start the engine.***

- ***Do not bend the key grip.***

- ***Do not cover the key grip with any material that cuts off electromagnetic waves.***
- ***Do not knock the key hard against other objects.***
- ***Do not leave the key exposed to high temperatures for a long period, such as on the dashboard and hood under direct sunlight.***
- ***Do not put the key in water or wash it in an ultrasonic washer.***
- ***Do not use the key with electromagnetic materials.***

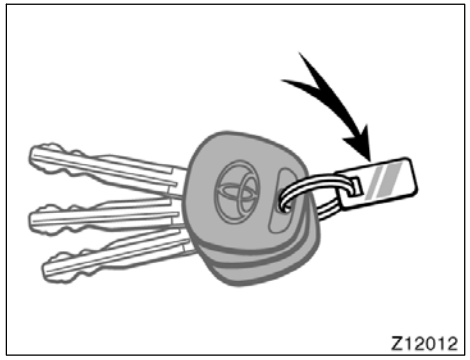

KEY NUMBER PLATE

Your key number is shown on the plate. Keep the plate in a safe place such as your wallet, not in the vehicle.

If you should lose your keys or if you need additional keys, duplicates can be made by a Toyota dealer using the key number.

We recommend writing down the key number and storing it in a safe place.

Keys (with smart key system)

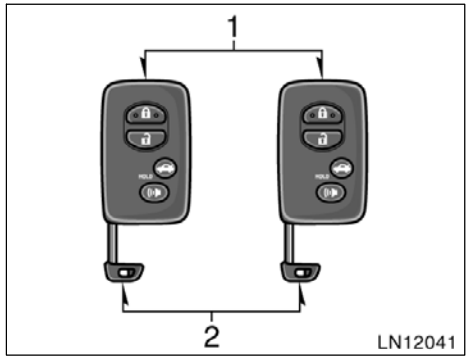

The key consists of an electronic key and a mechanical key. The mechanical key is for emergency use. If the electronic key does not operate, you can open the driver’s door using the mechanical key.

1. Electronic keys—These keys can lock or unlock all the doors and can open the trunk by using the wireless remote control function or entry function of the smart key system.
2. Mechanical keys—These keys can lock or unlock the driver’s door, the glove box and the door located behind the rear seat armrest.

Spare keys should not be left in the cabin. In the event that a spare key is left in the cabin, the smart key system will remain actuated even after the doors have been locked. Under these circumstances, the trunk can be opened even after the driver has exited and locked the vehicle, increasing the danger of theft. (Refer to “OPENING TRUNK WITH SMART KEY SYSTEM” on page 46 in this Section.)

To protect items locked in the trunk or the glove box when using valet parking, leave the electronic key with the attendant. Keep the mechanical key with you. For details about locking the trunk opener switch, see “—Luggage security system” on page 47 in this Section.

A transponder chip for engine immobilizer system has been placed in the electronic keys. These chips are needed to enable the system to function correctly, so be careful not to lose these keys.

⚠ CAUTION

- **People with implanted pacemakers or cardiac defibrillators should keep away from the smart key system antennas, because the radio waves may affect the operation of such devices. For the antenna locations see “ANTENNA LOCATION” on page 32 in this Section.**
- **Users of any electrical medical device other than implanted pacemakers and implanted cardiac defibrillators should consult the manufacturer of the device for information about its operation under the influence of radio waves. Radio waves could have unexpected effects on the operation of such medical devices.**
- **If necessary, the entry function can be disabled. See “DISABLING THE SMART KEY SYSTEM” on page 36 in this Section.**

NOTICE

When using a electronic key containing a transponder chip, observe the following precautions:

- ***Do not affix any material that cuts off electromagnetic waves (such as a metal seal) on the electronic key.***
- ***Do not knock the electronic key hard against other objects.***
- ***Do not leave the electronic key exposed to high temperatures for a long period, such as on the dashboard or hood under direct sunlight.***
- ***Do not put the electronic key in water or wash it in an ultrasonic washer.***
- ***Do not keep the electronic key together with the products emitting electromagnetic waves such as a cellular phone.***

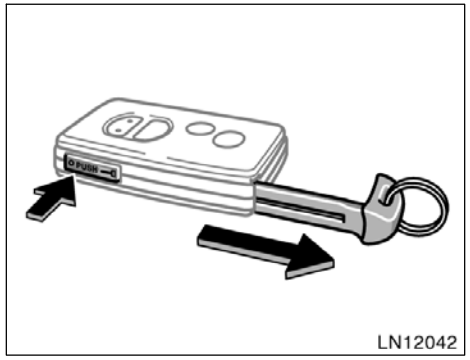

USING A MECHANICAL KEY

When you use the mechanical key push the release button and take out the mechanical key as shown. Be sure to put the mechanical key back when not it use.

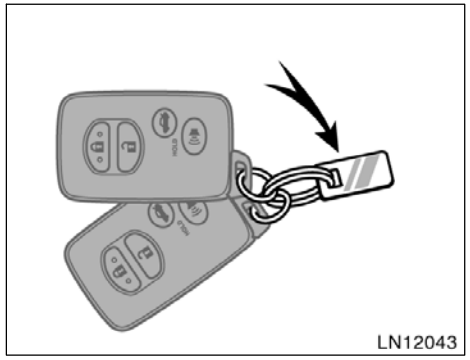

KEY NUMBER PLATE

Your key number is shown on the plate. Keep the plate in a safe place such as your wallet, not in the vehicle.

If you should lose your keys or if you need additional keys, duplicates can be made by Toyota dealer using the key number.

We recommend writing down the key number and storing it in a safe place.

Engine immobilizer system

The engine immobilizer system is a theft prevention system using an electronic code. The transponder chip in the key has an electronic code and transmits the code to the vehicle. Only when the electronic code in the chip corresponds to the register ID code for the vehicle, the engine immobilizer system will be canceled and the engine will start.

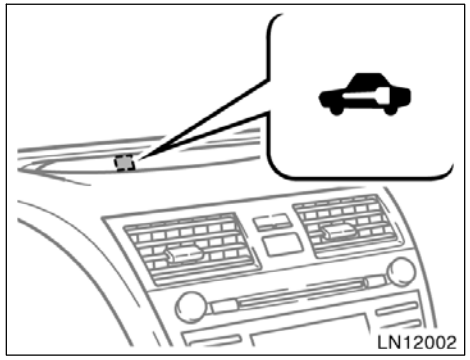

The engine immobilizer system is automatically set when:

Vehicles with key cylinder–type ignition switch—The key is removed from the ignition switch.

Vehicles with smart key system—The ignition switch is turned off.

The indicator light will start flashing to show that the system is set.

If any of the following indicator conditions occur, contact your Toyota dealer.

- The indicator light stays on except when the theft deterrent system is setting or activating. (See “Theft deterrent system” on page 49 in this Section.)
- The indicator light does not start flashing under the following situations.

  Vehicles with key cylinder–type ignition switch—When the key is removed from the ignition switch.

  Vehicles with smart key system—When the ignition switch is turned off.
- The indicator light flashes inconsistently.

The engine immobilizer system is automatically canceled when:

Vehicles with key cylinder–type ignition switch—
You insert the key to the ignition switch.

Vehicles with smart key system—
You enter the vehicle carrying a key with smart key system and press the “ENGINE START STOP” switch (engine switch).

Even if the key battery is discharged, the engine can be started. See “Smart key system” on page 30 in this Section.

When the system is canceled, the indicator light will go off.

For your Toyota dealer to make you a new key with built–in transponder chip, your dealer will need your key number and master key (vehicles with key cylinder–type ignition switch) or electronic key (vehicles with smart key system). However, there is a limit to the number of additional keys your Toyota dealer can make for you.

NOTICE

Do not modify, remove or disassemble the engine immobilizer system. If any unauthorized changes or modifications are made, proper operation of the system cannot be guaranteed.

For vehicles sold in U.S.A.

Key cylinder–type ignition switch
FCC ID: MOZRI–20BTY
FCC ID: MOZRI–21BTY

Smart key system
FCC ID: NI4TMIMB–1

This device complies with Part 15 of the FCC Rules. Operation is subject to the following two conditions:

(1) This device may not cause harmful interference, and (2) this device must accept any interference received, including interference that may cause undesired operation.

⚠ CAUTION

Changes or modifications not expressly approved by the party responsible for compliance could void the user’s authority to operate the equipment.

For vehicles sold in Canada

This device complies with RSS–210 of Industry Canada. Operation is subject to the following two conditions:

(1) This device may not cause interference, and (2) this device must accept any interference, including interference that may cause undesired operation of the device.

Wireless remote control—

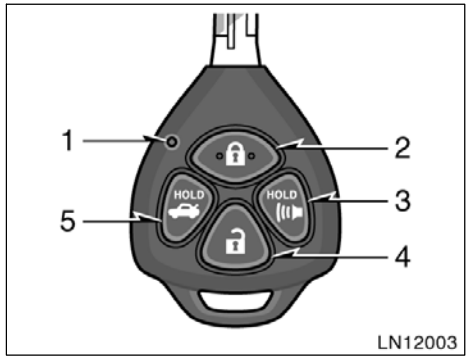

Vehicles with key cylinder–type ignition switch

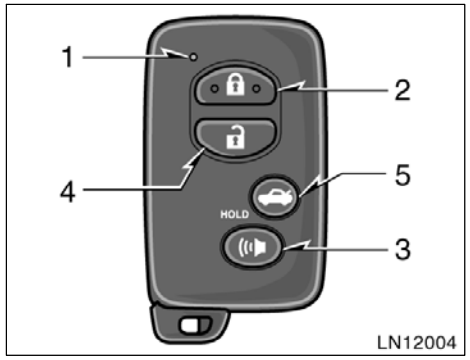

Vehicles with smart key system

1. Indicator light
2. Lock switch
3. Alarm switch
4. Unlock switch
5. Trunk opener switch

The wireless remote control function is designed to lock or unlock all the doors, open the trunk lid, or activate the alarm from a distance within approximately 1 m (3 ft.) of the vehicle.

When you operate any switch, push it slowly and securely.

When the switch is operated, the indicator light flashes once. If not, the battery may be discharged. Replace the battery at the earliest opportunity.

The wireless remote control transmitter is an electronic component. Observe the following instructions in order not to cause damage the key.

- Do not leave the transmitter in places where the temperature becomes high such as on the dashboard.
- Do not disassemble it.
- Avoid knocking it hard against other objects or dropping it.
- Avoid putting it in water.

You can use up to 4 wireless remote control keys (for vehicles with key cylinder–type ignition switch) or 5 wireless remote control transmitters (for vehicles with smart key system) for the same vehicle. Contact your Toyota dealer for detailed information.

If the wireless remote control transmitter does not actuate the doors, or does not operate from a normal distance, or if the indicator on the transmitter is dimmed or does not come on:

- Check for closeness to a radio transmitter such as a radio station or an airport which can interfere with normal operation of the key.
- The battery may have been consumed. Check the battery in the key. To replace the battery, see “—Replacing battery” on pages 26 or 28 in this Section.

If you lose your wireless remote control key, contact your Toyota dealer as soon as possible to avoid the possibility of theft, or an accident. (See “If you lose your keys” on page 356 in Section 4.)

It is possible to disable the wireless remote control system. For details, contact your Toyota dealer.

For vehicles sold in U.S.A.

This device complies with Part 15 of the FCC Rules. Operation is subject to the following two conditions:

(1) This device may not cause harmful interference, and (2) this device must accept any interference received, including interference that may cause undesired operation.

NOTICE:
This equipment has been tested and found to comply with the limits for a Class B digital device, pursuant to Part 15 of the FCC Rules. These limits are designed to provide reasonable protection against harmful interference in a residential installation. This equipment generates, uses and can radiate radio frequency energy and, if not installed and used in accordance with the instructions, may cause harmful interference to radio communications. However, there is no guarantee that interference will not occur in a particular installation. If this equipment does cause harmful interference to radio or television reception, which can be determined by turning the equipment off and on, the user is encouraged to try to correct the interference by one or more of the following measures:

- Reorient or relocate the receiving antenna.
- Increase the separation between the equipment and receiver.
- Connect the equipment into an outlet on a circuit different from that to which the receiver is connected.
- Consult the dealer or an experienced radio/TV technician for help.

FCC WARNING:
Changes or modifications not expressly approved by the party responsible for compliance could void the user’s authority to operate the equipment.

For vehicles sold in Canada

Operation is subject to the following two conditions:

(1) this device may not cause interference, and (2) this device must accept any interference, including interference that may cause undesired operation of the device.

—Locking and unlocking doors

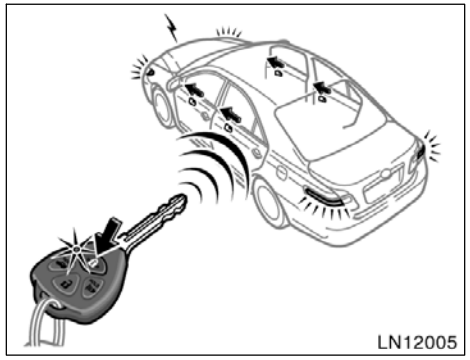

Locking operation (vehicles with key cylinder–type ignition switch)

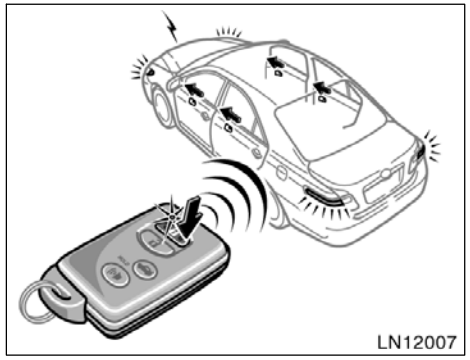

Locking operation (vehicles with smart key system)

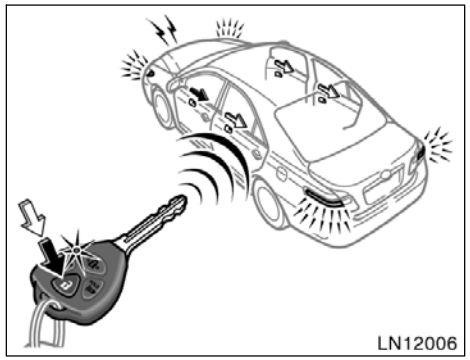

Unlocking operation (vehicles with key cylinder–type ignition switch)

Unlocking operation (vehicles with smart key system)

To lock or unlock all the doors, push the switches slowly and securely.

To lock: Push the lock switch. All the doors are locked simultaneously. At this time one beep will sound and turn signal lights flash once.

Check to see that the doors are securely locked.

If any of the doors is not securely closed, or if the key is in the ignition switch (vehicles with key cylinder–type ignition switch) or key left in the vehicle (vehicles with smart key system), locking cannot be performed by the lock switch and a beep will sound continuously for 10 seconds.

To stop the beep, take out the key from the vehicle or push the unlock switch.

The answerback function (the turn signal flash and the beep) can be disabled. For details, contact your Toyota dealer.

To unlock: Push the unlock switch once to unlock the driver’s door alone. Pushing the switch twice within 3 seconds unlocks all the doors simultaneously. Each time the unlock switch is pushed, two beeps will sound and turn signal lights flash twice.

This double switch operation to unlock all doors can be changed to a single switch operation. For details, contact your Toyota dealer.

If the key is in the ignition (vehicles with key cylinder–type ignition switch) or the ignition switch is set to ACC or ON (vehicles with smart key system), the vehicle cannot be unlocked via the unlock switch.

You have 60 seconds to open a door after using the wireless remote unlock feature. If a door is not opened by then, all the doors will be automatically locked again.

If the wireless remote control is used to lock the doors near the window or door handle, there is a possibility that the door may not unlocked by entry function of smart key system. Under these circumstances, use the wireless remote control to unlock the doors.

The automatic locking time can also be set to 30 seconds. For details, contact your Toyota dealer.

If the lock or unlock switch is kept pressed in, the locking or unlocking operation is not repeated. Release the switch and then push again.

When you unlock doors using the wireless remote control, the illuminated entry function will be activated. (For further information, see “Illuminated entry system” on page 128 in Section 1–5.)

—Opening trunk lid

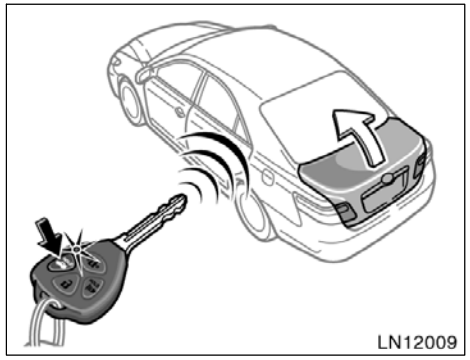

Vehicles with key cylinder–type ignition switch

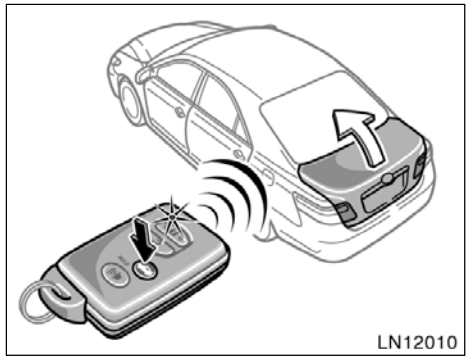

Vehicles with smart key system

To open the trunk lid, push and hold the trunk opener switch of the transmitter for 1 second. A long beep will sound.

If the key is in the ignition (vehicles with key cylinder–type ignition switch) or the ignition switch is set at ACC or ON (vehicles with smart key system), the trunk lid cannot be opened by the trunk opener switch.

Opening of the trunk lid with the wireless remote control can be changed as follows. Contact your Toyota dealer for details.

- Trunk lid opens by pushing the trunk opener switch twice in succession.
- Trunk lid opens by pushing the trunk opener switch once regardless of how long the switch is being pressed.
- Opening of the trunk lid is disabled using the wireless remote control transmitter.

—Activating alarm

Vehicles with key cylinder–type ignition switch

Vehicles with smart key system

Pushing the alarm switch for 1 second or more blows the horn intermittently and flashes the headlights, turn signal lights, tail lights and interior light.

Vehicles with smart key system only—When pushing the switch, the indicator light flashes.

The alarm switch is used to deter vehicle theft when you witness anyone attempting to break into or damage your vehicle.

The alarm will last for one minute. To stop the alarm midway, push any button on the wireless remote control or set the ignition switch to ON.

If the key is in the ignition (vehicles with key cylinder–type ignition switch) or the ignition switch is set at ACC or ON (vehicles with smart key system), the alarm does not work.

This alarm function can be disabled. For details, contact your Toyota dealer.

—Replacing battery (with key cylinder–type ignition switch)

For replacement, use a CR2016 lithium battery or equivalent.

⚠ CAUTION

Special care should be taken to prevent small children from swallowing the removed battery or components.

NOTICE

- ***When replacing the battery, be careful not to lose the components.***
- ***Replace only with the same or equivalent type recommended by a Toyota dealer.***
- ***Dispose of used batteries according to the local laws.***

Replace the battery by following these procedures:

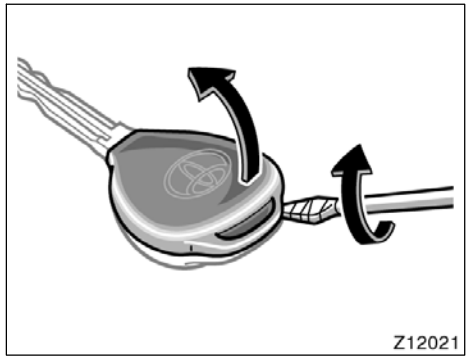

1. Open the cover using a flathead screwdriver wrapped with plastic tape.

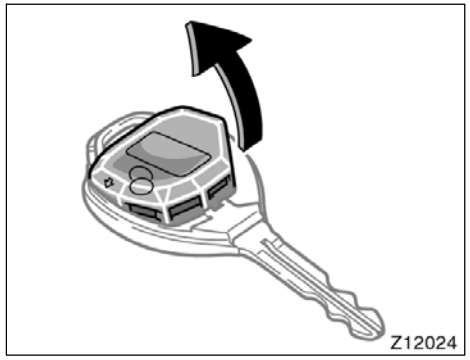

2. Remove the module from the key frame.

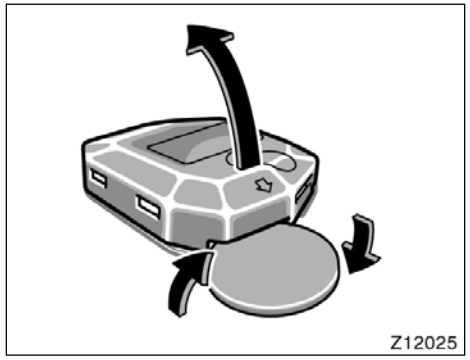

3. Open and remove the battery case cover using a coin.

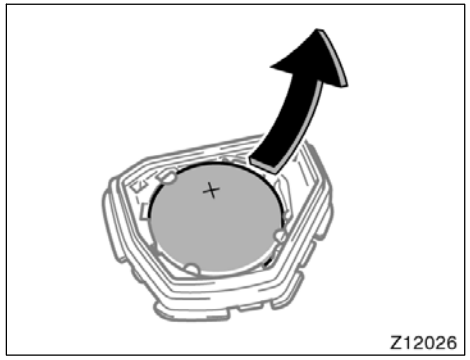

4. Take out the discharged transmitter battery and put in a new battery with the positive (+) side up.

5. Install the battery case cover and then install the module into the key frame. Close the cover.
6. When pushing either switch on the wireless key, make sure the indicator light comes on.

NOTICE

- ***Do not bend the terminals.***
- ***Make sure the positive side and negative side of the battery are faced correctly.***
- ***Do not replace the battery with wet hands. Water may cause unexpected rust.***
- ***Do not touch or move any components inside the transmitter, or it may interfere with proper operation.***
- ***Be careful not to bend the electrode when inserting the battery and that dust or oils do not adhere to the case.***
- ***Close the cover securely.***

After replacing the battery, check that the key operates properly. If the key still does not operate properly, contact your Toyota dealer.

—Replacing battery (with smart key system)

The transmitter can easily be damaged when replacing the battery. We recommend having the battery replaced by your Toyota dealer. If you have to do it yourself, use a CR1632 lithium battery or equivalent and a flathead screwdriver.

⚠ CAUTION

Special care should be taken to prevent small children from swallowing the removed transmitter battery or components.

NOTICE

- ***Be careful not to touch the circuit, as this may generate static electricity that can damage the transmitter.***
- ***When replacing the transmitter battery, be careful not to lose the components.***
- ***Replace only with the same or equivalent type recommended by a Toyota dealer.***
- ***Dispose of used batteries according to the local laws.***

Replace the transmitter battery by following these procedures:

1. Push the release button and take out the mechanical key.

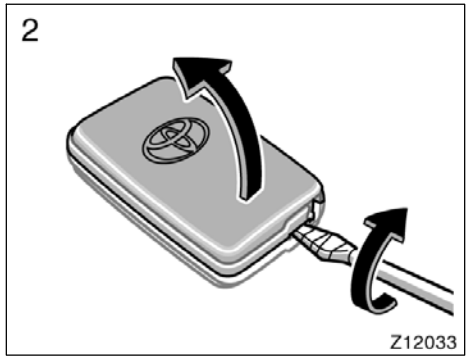

2. Using a flathead screwdriver or equivalent, open the transmitter case.

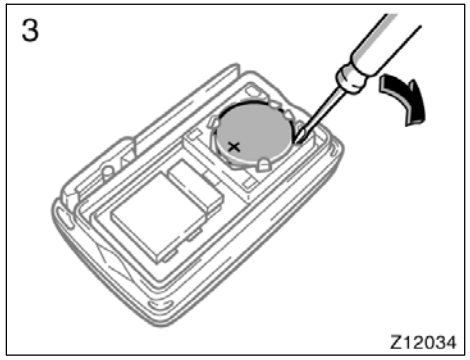

3. Remove the discharged transmitter battery by flathead screwdriver or equivalent. Insert the guide groove and lift as shown in the above illustration.

NOTICE
Do not modify the battery case. It may cause a transmitter malfunction.

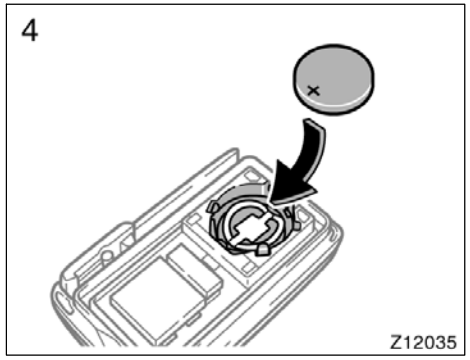

4. Put in a new battery with the positive (+) side up. Install the cover and insert the mechanical key into the transmitter.

Close the transmitter case securely.

NOTICE

- ***Make sure the positive side and negative side of the battery are faced correctly.***
- ***Do not replace the battery with wet hands. Water may cause unexpected rust.***
- ***Do not touch or move any components inside the transmitter, or it may interfere with proper operation.***
- ***Be careful not to bend the electrode when inserting the transmitter battery and that dust or oils do not adhere to the case.***
- ***Close the transmitter case securely.***

After replacing the battery, check that the transmitter operates properly. If the transmitter still does not operate properly, contact your Toyota dealer.

Smart key system

The smart key system consists mainly of the following functions.

- Engine immobilizer function (For details, see “Engine immobilizer system” on page 18 in this Section.)
- Wireless remote control function (For details, see “Wireless remote control” on page 20 in this Section.)
- Push button start function (For details, see “How to start the engine” on page 316 in Section 3.)
- Entry function and start function (See “ENTRY FUNCTION AND START FUNCTION” described below.)
- Steering lock function (See “STEERING LOCK FUNCTION” described below.)

⚠ CAUTION

- **People with implanted pacemakers or cardiac defibrillators should keep away from the smart key system antennas, because the radio waves may affect the operation of such devices. For the antenna locations see “ANTENNA LOCATION” on page 32 in this Section.**
- **Users of any electrical medical device other than implanted pacemakers and implanted cardiac defibrillators should consult the manufacturer of the device for information about its operation under the influence of radio waves. Radio waves could have unexpected effects on the operation of such medical devices.**
- **If necessary, the entry function can be disabled. See “DISABLING THE SMART KEY SYSTEM” on page 36 in this Section.**

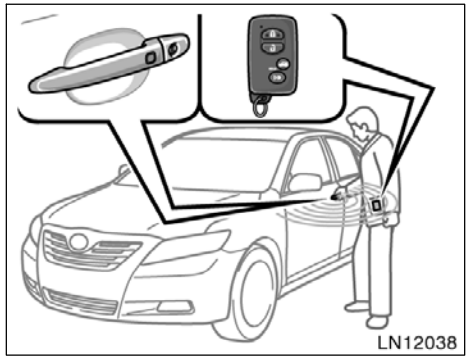

Entry function

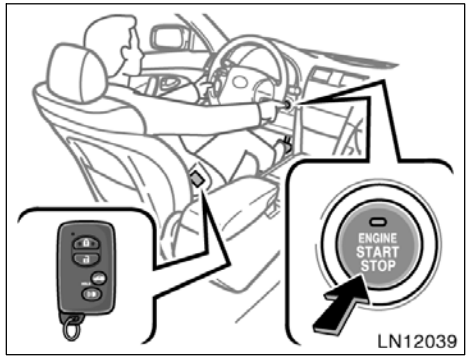

Start function

ENTRY FUNCTION AND START FUNCTION

Simply by carrying the key, you can lock and unlock the doors and start the engine.

Entry function—You can lock and unlock the doors and open the trunk without inserting the key in the keyholes. For further information, see “Side doors” on page 36 and “Trunk lid” on page 46 in this Section.

Start function—You can shift the power supply mode and start the engine when the electronic key is in the vehicle. For further information, see “Ignition switch” on page 159 in Section 1–7 and “How to start the engine” on page 316 in Section 3.

If the smart key system does not operate properly because of a system malfunction, consult your Toyota dealer. Make sure to bring all of the keys. They may be necessary to repair the system.

STEERING LOCK FUNCTION

When the driver’s door is opened after turning off the engine, the steering wheel will lock.

The steering lock is automatically unlocked when the “ENGINE START STOP” switch (engine switch) is pressed. If the indicator light on the “ENGINE START STOP” switch flashes green, this indicates that the steering wheel remains locked. If the amber indicator light flashes, this indicates that the steering lock is malfunctioning. For details, see “How to start the engine” on page 316 in Section 3.

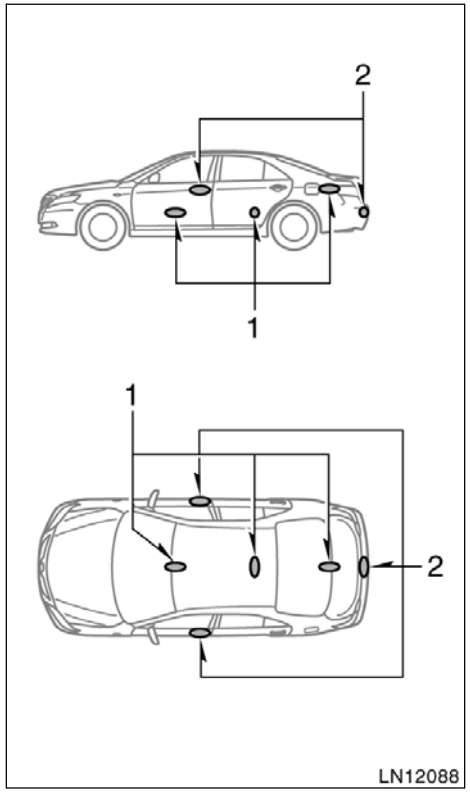

ANTENNA LOCATION

1. Antenna inside cabin and trunk
2. Antenna outside cabin and trunk

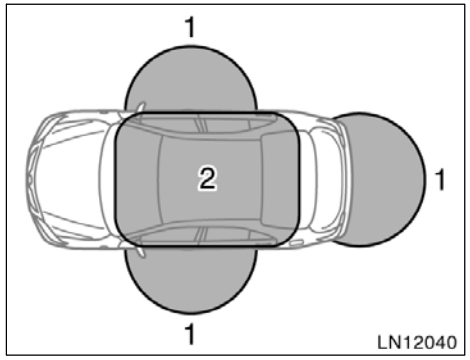

ACTUATION AREA

The entry function and start function are available to use when a registered key is in the actuation area.

1. **Entry function actuation area—**About 0.7 m (2 ft.) from each outside front door handle and the trunk opener switch

   Only the door handle of the actuation area that the key holder is in can be operated.

   If the key is close to the door handle, windows or the center of the rear bumper, on the ground or above the roof, the entry function may not be activated.

2. **Start function actuation area—**Inside of the cabin

   The start function may not be activated, if the key is in the auxiliary box of the driver’s side instrument panel and glove box, on the instrument panel, on the package tray, on the floor, etc.

In the following cases, the smart key system may not operate properly.

- When facilities issuing strong electromagnetic waves such as TV towers, electric power stations, broad casting stations are nearby.
- In places where automated payment facilities are installed (such as gas stations).
- When you are carrying a electronic key together with a mobile communications system such as a two–way radio or cellular phone.
- When the electronic key is in contact with or covered by a metallic object.
- When another person is operating a wireless remote control function on another vehicle near your vehicle.
- When the battery is discharged. To replace the battery, see “—Replacing battery” on page 28 in this Section.
- When the electronic key is near a high–voltage or noise–emitting device.
- When you are carrying an electronic key together with a key for another smart key system equipped vehicle or another instrument emitting radio waves.
- Depending on the position of the key or vehicle body shape, the key may not work well even within the actuation area.
- When the key surface is covered by a sticker, etc. that may cut off electromagnetic wave.

Even if the smart key system does not operate properly, you can still enter and start the engine. For further information, see “Side doors” on page 36 and “Trunk lid” on page 46 in this Section, and see “How to start the engine” on page 316 in Section 3.

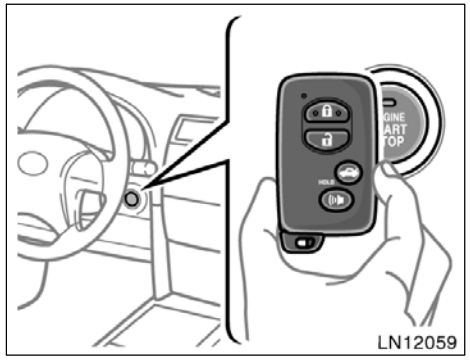

STARTING THE ENGINE WHEN THE ELECTRONIC KEY BATTERY IS DISCHARGED

If the key indicator does not flash and the engine cannot be started by using the start function, the battery may be discharged. Replace the key battery as soon as possible. (See “Wireless remote control” on page 20 in this Section.)

However the engine can be started in the following procedures.

1. While the brake pedal is depressed, touch the Toyota logo side of the electronic key to the “ENGINE START STOP” switch.

2. Start the engine within 5 seconds after the green indicator light on the “ENGINE START STOP” switch comes on and a buzzer sounds.

BATTERY POWER SAVING

Both the vehicle and key transmitters are always sending signals to each other. To prevent battery drain, the smart key system is automatically deactivated in the following conditions:

- If the electronic key is left outside of the vehicle and within the effective range of the entry function actuation area for more than 10 minutes.
- If the door lock or unlock operation is not performed more than 2 weeks.

The key and the vehicle are communicating even while the vehicle is not being driven. Do not leave the key near the vehicle (within 2 m [7 ft.]).

The vehicle battery may drain if the vehicle is not used for a long period of time. To prevent battery drain, disconnect the battery negative (–) terminal or disable the smart key system. (For details about disable the smart key system, see “DISABLING THE SMART KEY SYSTEM” on page 36 in this Section.)

To reactivate the smart key system, perform any of the following:

(a) Press the lock button on the front outside door handle or trunk open button while carrying the electronic key.

(b) Perform a wireless remote control operation.

(c) Insert and turn the mechanical key in the keyhole of the driver’s door.

If the electronic key receives strong electromagnetic waves over a period of time, the battery can be drastically run down. You should always keep the following electrical appliances at least 1 m (3 ft.) away from the electronic key.

- TV
- Personal computer
- Cellular phone or cordless phone recharger unit
- Electric light stand
- Fluorescent desk light

For vehicles sold in U.S.A.

FCC ID: NI4TMLF–3

This device complies with Part 15 of the FCC Rules. Operation is subject to the following two conditions:

(1) This device may not cause harmful interference, and (2) this device must accept any interference received, including interference that may cause undesired operation.

⚠ CAUTION

Changes or modifications not expressly approved by the party responsible for compliance could void the user’s authority to operate the equipment.

For vehicles sold in Canada

This device complies with RSS–210 of Industry Canada. Operation is subject to the following two conditions:

(1) This device may not cause interference, and (2) this device must accept any interference, including interference that may cause undesired operation of the device.

For vehicles sold in U.S.A.

This device complies with Part 15 of the FCC Rules. Operation is subject to the following two conditions:

(1) This device may not cause harmful interference, and (2) this device must accept any interference received, including interference that may cause undesired operation.

NOTICE:

This equipment has been tested and found to comply with the limits for a Class B digital device, pursuant to Part 15 of the FCC Rules. These limits are designed to provide reasonable protection against harmful interference in a residential installation. This equipment generates, uses and can radiate radio frequency energy and, if not installed and used in accordance with the instructions, may cause harmful interference to radio communications. However, there is no guarantee that interference will not occur in a particular installation. If this equipment does cause harmful interference to radio or television reception, which can be determined by turning the equipment off and on, the user is encouraged to try to correct the interference by one or more of the following measures:

- Reorient or relocate the receiving antenna.
- Increase the separation between the equipment and receiver.
- Connect the equipment into an outlet on a circuit different from that to which the receiver is connected.
- Consult the dealer or an experienced radio/TV technician for help.

FCC WARNING:
Changes or modifications not expressly approved by the party responsible for compliance could void the user’s authority to operate the equipment.

For vehicles sold in Canada

Operation is subject to the following two conditions:

(1) this device may not cause interference, and (2) this device must accept any interference, including interference that may cause undesired operation of the device.

DISABLING THE SMART KEY SYSTEM

The following functions can be disabled:

- A function that allows you to lock/unlock the doors and open the trunk by simply carrying a key
- A function that causes the vehicle to beep if keys are forgotten inside the vehicle or trunk and a door is closed
- A function that shifts the power supply mode and starts the engine when the electronic key is in the vehicle.
- Warning lights and buzzers

For details, contact your Toyota dealer.

If the smart key system does not operate properly because of a system malfunction, consult your Toyota dealer. Make sure to bring all of the keys. They may be necessary to repair the system.

Side doors— —Locking and unlocking door with key

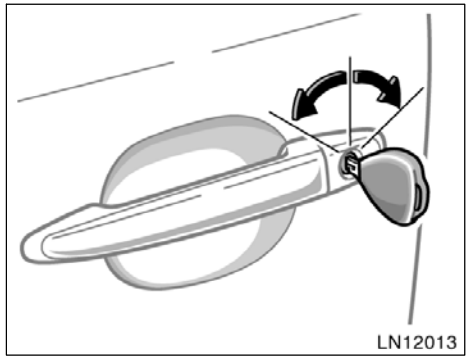

Vehicles with key cylinder–type ignition switch

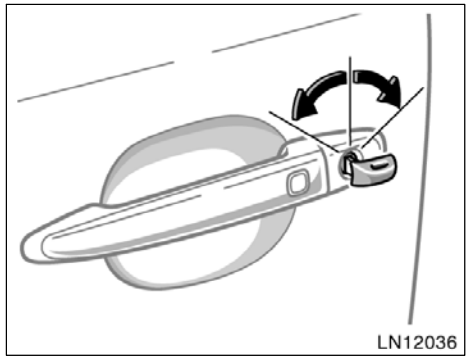

Vehicles with smart key system

Insert the key into the keyhole and turn it.

To lock: Turn the key forward.
To unlock: Turn the key backward.

With wireless remote control—All the doors lock and unlock simultaneously with the driver’s door. Turning the key once will unlock the driver’s door and twice in succession will unlock all the doors simultaneously.

Without wireless remote control—All the doors lock and unlock simultaneously with either front door. In the driver’s door lock, turning the key once will unlock the driver’s door and twice in succession will unlock all the doors simultaneously.

This double key turning operation to unlock all the doors can be changed to a single key turning operation. For details, contact your Toyota dealer.

Vehicles with smart key system—For three seconds after the doors have been locked, the doors cannot be re–unlocked via the smart key system.

When you unlock the doors, the illuminated entry system will be activated. (For further information, see “Illuminated entry system” on page 128 in Section 1–5.)

—Locking and unlocking with smart key system

When you carry the registered key with smart key system into the actuation area, you can lock and unlock the side doors without using the key. For further information of actuation area, see “Smart key system” on page 30 in this Section.

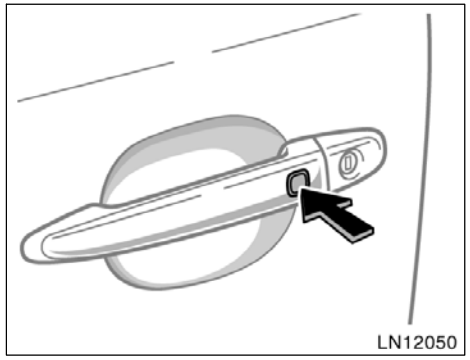

Locking operation

Push the lock button on the front outside door handle slowly and firmly. All the doors lock simultaneously. At this time one beep will be heard and turn signal lights flash once.

In the following cases, you cannot be locked by pushing the lock button and a beep will sound as an indicator.

- When any of the doors is not securely closed. A beep will sound continuously for 10 seconds.
- When the lock switch is pressed while opening or closing the door. A beep will sound continuously for 10 seconds.

- When the engine is not turned off. A beep will sound continuously for 2 seconds.
- When the key is left in the vehicle. A beep will sound continuously for 2 seconds.
- When attempting to lock the doors with the key near a window or a door handle. A beep will sound continuously for 2 seconds.

The beep may not sound if the key is on the instrument panel, on the package tray, in the glove box or on the floor, etc.

The answerback function (the turn signal flash and the beep) can be disabled. For details, contact your Toyota dealer.

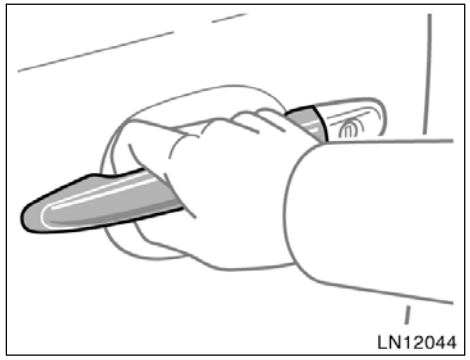

Unlocking operation

Grasp the front outside door handle (sensors are located on the underside of the door handles). Only the driver’s door unlocks when the driver’s door handle is grasped. All the doors unlock when the front passenger’s door handle is grasped. At this time two beeps will be heard and the turn signal lights flash twice.

The doors may not unlock if the handle is grasped too quickly. Be sure to confirm that the doors are unlocked before pulling the door handle. If the doors do not open when the handle is pulled, return the handle to its original position.

Wearing gloves may slow response time. For three seconds after the doors have been locked, the doors cannot be re–unlocked via the smart key system.

The answerback function (the turn signal flash and the beep) can be disabled. For details, contact your Toyota dealer.

When you enter the entry function actuation area, the interior light comes on for about 15 seconds. After the light comes on, all the side doors can be unlocked by grasping the outside door handle.

You have 60 seconds to open a door after using the unlocking function. If a door is not opened by then, all the doors will be automatically locked again.

The automatic locking time can also be set to 30 seconds. For details, contact your Toyota dealer.

The doors may unlock if the key is within the entry function actuation area and a large amount of water splashes on the door handle (for example, in the rain or in a car wash).

When you unlock the doors, the illuminated entry system will be activated. (For further information, see “Illuminated entry system” on page 128 in Section 1–5.)

SELECTING DOORS TO BE UNLOCKED WITH ENTRY FUNCTION

The unlocking operation has 2 modes. To change the mode, within 1 m (3 ft.) of the vehicle press the lock switch and the alarm, trunk opener or unlock switch simultaneously for five seconds.

The ignition must be turned off.

When the mode is changed, the buzzer will sound and an indicator is displayed on the multi–information display as follows:

Mode	Door to be unlocked	Wireless remote control buzzer	Indicator and meter buzzer
1	All doors	2 beeps	1 beep
2	Driver’s door only (from driver’s door switch) All doors (from front passenger’s door switch)	3 beeps	1 beep

Repeating the above process allows you to toggle between 1 and 2.

—Locking and unlocking with inside lock knob

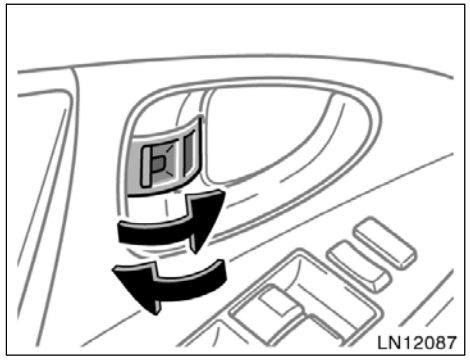

Move the lock knob.

To lock: Push the knob forward.
To unlock: Pull the knob backward.

The front doors can be opened by pulling the inside handle even if the lock knobs are in the locked position.

⚠ CAUTION

Do not pull the inside handle of the front doors while driving. The doors will open and an accident may occur. Toyota strongly recommends that all children be placed in the rear seat of the vehicle.

Closing the door with the lock knob in the lock position will also lock the door. Be careful not to lock your keys in the vehicle.

Doors cannot be locked when either front door is open and the key is in the ignition (vehicles with key cylinder–type ignition switch) or key is left in the vehicle (vehicles with smart key system).

—Locking and unlocking with power door lock switch

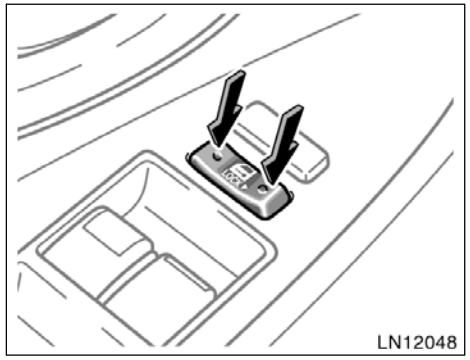

Driver’s side (type A)

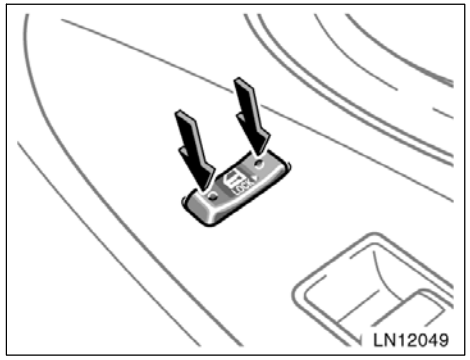

Passenger’s side (type A)

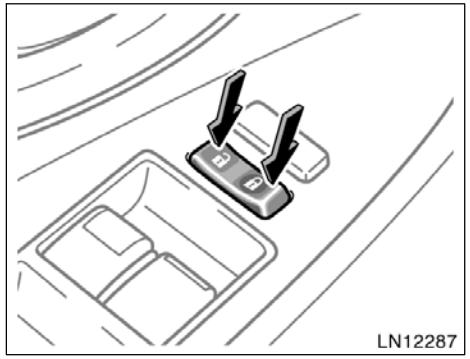

Driver’s side (type B)

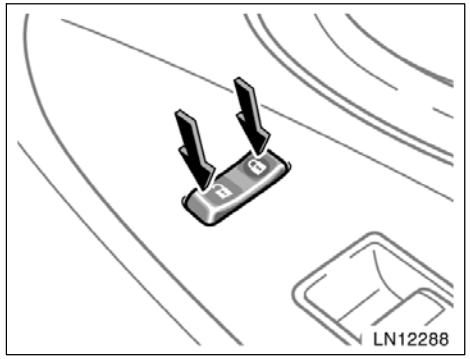

Passenger’s side (type B)

Push the switch.

To lock: Push the switch down on the right side.
To unlock: Push the switch down on the left side.

All the doors lock or unlock simultaneously.

When the front doors are locked from the outside or locked with the wireless remote control transmitter, the power door lock switch will not work until either front door is unlocked with the key, lock knob, or wireless remote control transmitter.

—Automatic door locking and unlocking functions

AUTOMATIC DOOR LOCKING

You can select the following functions:

- **Locking linked with the shift position (automatic transmission models only)**

  All doors are automatically locked when the selector lever is moved out of “P” position.

- **Locking linked with vehicle speed**

  All doors are automatically locked when the vehicle speed goes above about 20 km/h (12 mph).

You can set or cancel the automatic door locking functions:

Be sure to apply the parking brake when performing the following operations.

To select the locking linked with the shift position:

1. Close all doors and set the ignition switch to ON.
2. Shift the selector lever to the “P” position.
3. Within 10 seconds of setting the ignition switch to ON, press and hold the driver’s side power door lock switch in the lock position for 5 seconds and then release.

   The doors will be locked and unlocked to indicate that the function is set.

To cancel the function, do the above operation again.

To select the locking linked with the vehicle speed:

1. Close all doors and set the ignition switch to ON.
2. Automatic transmission models only—Shift the selector lever from “P” to the “N” position.
3. Within 10 seconds of setting the ignition switch to ON, press and hold the driver’s side power door lock switch in the lock position for 5 seconds and then release.

   The doors will be locked and unlocked to indicate that the function is set.

To cancel the function, do the above operation again.

AUTOMATIC DOOR UNLOCKING

You can select the following functions:

- **Unlocking linked with the shift position (automatic transmission models only)**

  All doors are automatically unlocked when the selector lever is moved to “P” position.

- **Unlocking linked with the driver’s door**

  All doors are automatically unlocked when the driver’s door is opened within 10 seconds after the ignition switch is set from ON to ACC or OFF.

You can set or cancel the automatic door unlocking functions:

Be sure to apply the parking brake when performing the following operations.

To select the unlocking linked with the shift position:

1. Close all doors and set the ignition switch to ON.
2. Shift the selector lever to the “P” position.
3. Within 10 seconds of setting the ignition switch to ON, press and hold the driver’s side power door lock switch in the unlock position for 5 seconds and then release.

   The doors will be locked and unlocked to indicate that the function is set.

To cancel the function, do the above operation again.

To select the unlocking linked with the driver’s door:

1. Close all doors and set the ignition switch to ON.
2. Automatic transmission models only—Shift the selector lever from “P” to the “N” position.
3. Within 10 seconds of setting the ignition switch to ON, press and hold the driver’s side power door lock switch in the unlock position for 5 seconds and then release.

   The doors will be locked and unlocked to indicate that the function is set.

To cancel the function, do the above operation again.

—Rear door child–protectors

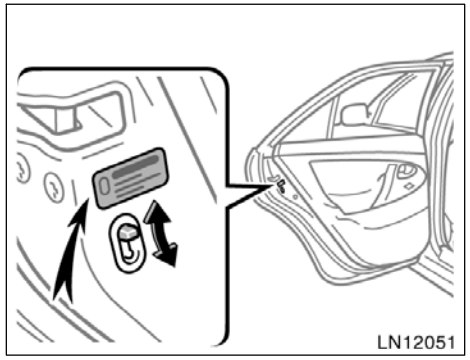

Move the lock lever to the “LOCK” position as shown on the label.

When the child–protector is locked, you cannot open the rear door by the inside door handle. We recommend using this feature whenever small children are in the vehicle.

⚠ CAUTION

Before driving, be sure that the doors are closed and locked, especially when small children are in the vehicle. Along with the proper use of seat belts, locking the doors helps prevent the driver and passengers from being thrown out from the vehicle in an accident. It also helps prevent the doors from being opened unintentionally.

Power windows

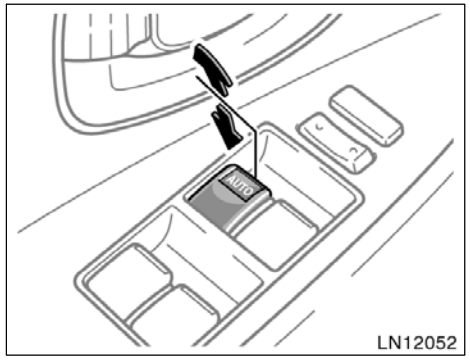

The windows can be operated with the switch on each door.

The power windows work when the ignition switch is set at ON.

Key off operation: All windows work for about 45 seconds even after the ignition switch is turned off. They stop working when either front door is opened.

OPERATING THE DRIVER’S WINDOW

Use the switch on the driver’s door.

Normal operation: The window moves as long as you hold the switch.

To open: Lightly push down the switch.
To close: Lightly pull up the switch.

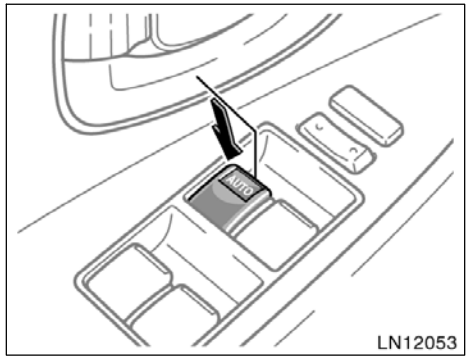

Type A (to open only)

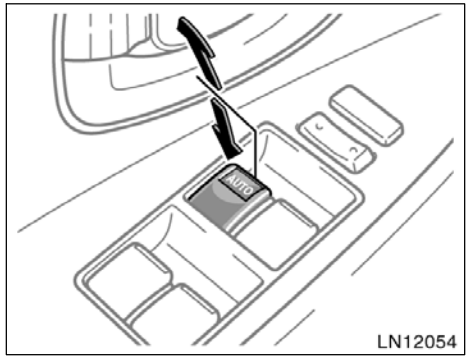

Type B (to open and close)

Automatic operation:

Type A—Push the switch completely down and then release it. The window will fully open. To stop the window partway, lightly pull the switch up and then release it.

Type B—Push the switch completely down or pull it completely up, and then release it. The window will fully open or close. To stop the window partway, lightly move the switch in the opposite direction and then release it.

Jam protection function (type B only):

During automatic closing operation, the driver’s window stops and opens about half way if something gets caught between the window and window frame.

If the window receives a strong impact, this function may work even if nothing is caught.

If the driver’s window switch is completely pulled up and held, this function does not work.

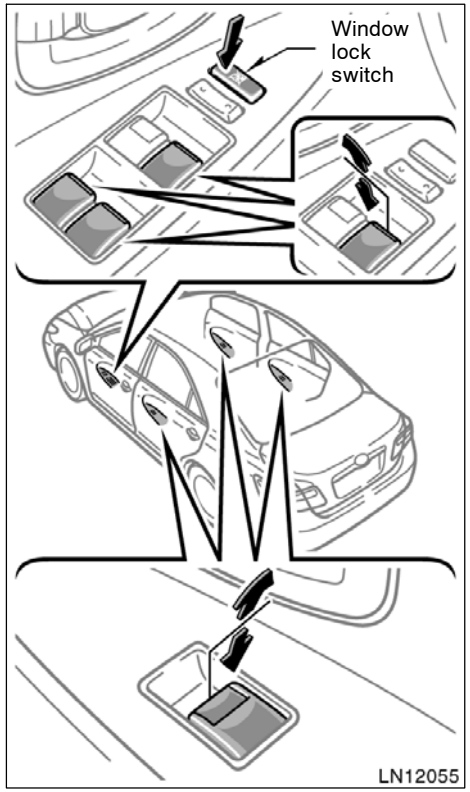

OPERATING THE PASSENGERS’ WINDOWS

Use the switches on the passengers’ doors. The driver’s door also has switches that control the passengers’ windows.

The window moves as long as you hold the switch.

To open: Push down the switch.
To close: Pull up the switch.

If you push in the window lock switch on the driver’s door, the passengers’ windows cannot be operated.

⚠ CAUTION

To avoid death or serious personal injury, you must do the following.

- **Before you close the power windows, always make sure there is nobody around the power windows. You must also make sure the heads, hands and other parts of the bodies of all occupants are kept completely inside the vehicle. If someone’s neck, head or hands get caught in a closing window, it could result in death or serious injury. When anyone closes the power windows, make sure he or she operates the windows safely.**
- **When small children are in the vehicle, never let them use the power window switches without supervision. Use the window lock switch to prevent them from making unexpected use of the switches.**
- **Never leave anyone (particularly a small child) alone in your vehicle, especially with the ignition key still inserted. Otherwise, he/she could use the power window switches and get trapped in a window. Unattended person (particularly a small child) can be involved in a serious accident.**
- **Never try jamming any part of your body to activate the jam protection function intentionally, as it could result in a death or serious injury.**
- **The jam protection function may not work if something gets caught just before the window fully closed.**

Trunk lid—

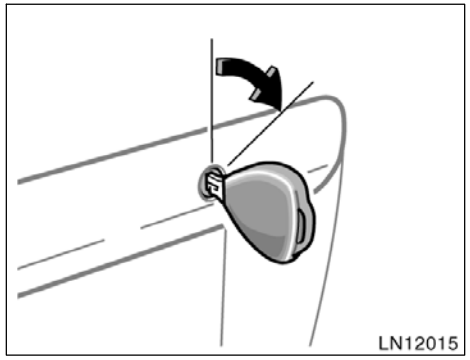

Vehicles with key cylinder–type ignition switch

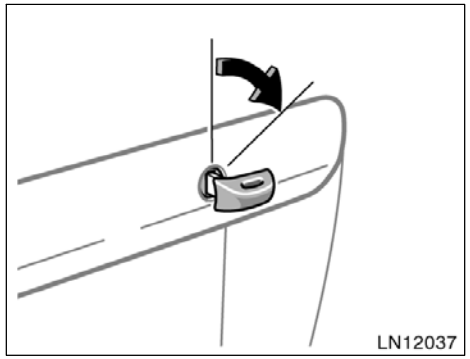

Vehicles with smart key system

To open the trunk lid from the outside, insert the master key (vehicles with key cylinder–type ignition switch) or mechanical key (vehicles with smart key system) and turn it clockwise.

See “—Stowage precautions” on page 310 in Section 2 for precautions when loading luggage.

To close the trunk lid, lower it and press down on it. After closing the trunk lid, try pulling it up to make sure it is securely closed.

The trunk lid can be opened with the wireless remote control transmitter, see “—Opening trunk lid” on page 24 in this Section.

⚠ CAUTION

Keep the trunk lid closed while driving. This not only keeps the luggage from being thrown out but also prevents exhaust gases from entering the vehicle.

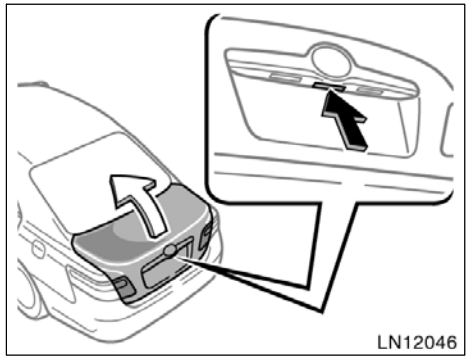

OPENING TRUNK WITH SMART KEY SYSTEM

When you carry the registered key into the actuation area, the trunk can be opened. For further information of actuation area, see “Smart key system” on page 30 in this Section.

A warning buzzer may sound when:

- The key is brought into the cabin after the trunk is opened, and the trunk is then closed.
- The key is near the trunk when the trunk is closed.

The buzzer may sound even when the key is not in the trunk. This does not indicate a problem. However, under these circumstances, the trunk cannot be opened using the smart key system. Open the trunk using other methods.

If you left the key in the trunk and close it when all side doors are locked, a beep will sound continuously for 2 seconds. You can open the trunk pushing the trunk opener switch without carrying another key. However, in some instances, the beep may not sound when the trunk is closed depending on the location of the key in the trunk. In addition, when the doors are open or unlocked, the beep may not sound when the trunk is closed. When closing the trunk, make sure that the key is not left in it.

—Lock release lever

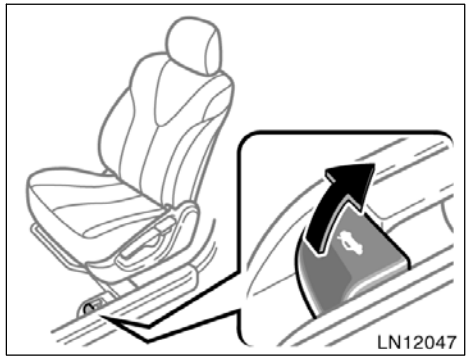

To open the trunk lid from the driver’s seat, pull up on the lock release lever.

To deactivate this lock release lever from opening the trunk lid, see “—Luggage security system” described below.

—Luggage security system

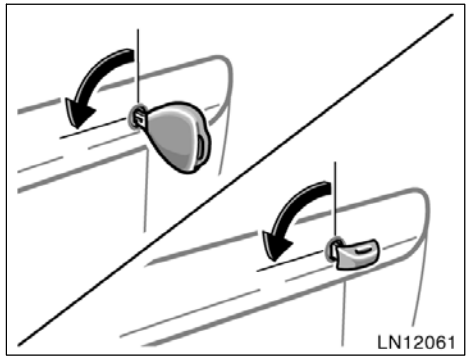

This system helps protect things locked in the trunk by safeguarding the trunk lid lock release lever from unwanted access.

1. **Close the trunk lid. Insert the master key (vehicles with key cylinder–type ignition switch) or mechanical key (vehicles with smart key system) and turn it counterclockwise to deactivate the trunk lid lock release lever.**

After the operation, try pulling up on the trunk lid lock release lever to make sure it is locked.

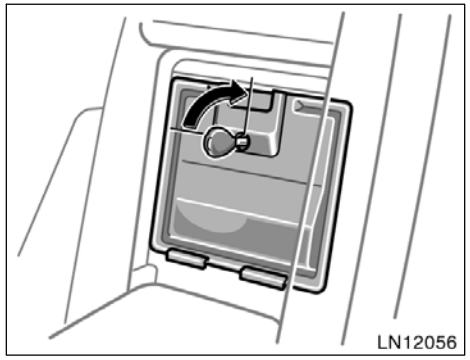

2. **Vehicles with trunk storage extension—After closing the door located behind the rear seat armrest, insert the master key (vehicles with key cylinder–type ignition switch) or mechanical key (vehicles with smart key system) and turn it clockwise to lock the door.**

NOTICE
Implement the above steps to maximize security of the luggage in the trunk whenever the vehicle is unattended.

—Internal trunk release strap

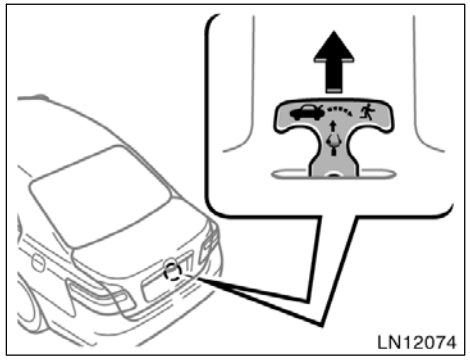

If a person is locked in the trunk, he/she can pull up the phosphorescent strap on the inside of trunk lid to open the trunk lid.

The phosphorescent (glow–in–the–dark) strap will continue to glow for a time after the trunk lid is closed. Exposing the strap to stronger light will cause it to glow longer.

⚠ **CAUTION**
• **Always lock the trunk lid and all doors, and keep away the vehicle keys out of children’s reach.** • **Never leave children unattended in the vehicle. Unsupervised children may lock themselves in the vehicle or trunk and suffer serious injuries or death.**

Hood

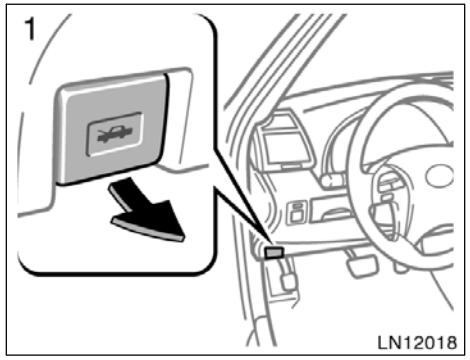

To open the hood:

1. **Pull the hood lock release lever. The hood will spring up slightly.**

⚠ CAUTION

Before driving, be sure that the hood is closed and securely locked. Otherwise, the hood may open unexpectedly while driving and an accident may occur.

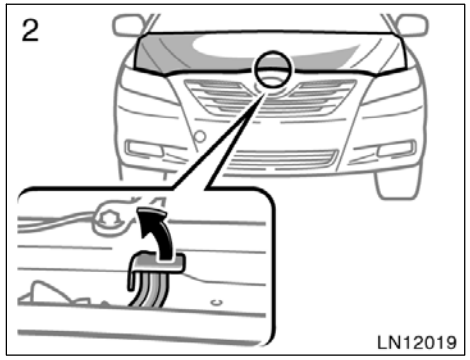

2. **In front of the vehicle, pull up the auxiliary catch lever and lift the hood.**

Before closing the hood, check to see that you have not forgotten any tools, rags, etc. Then lower the hood and make sure it locks into place. If necessary, press down gently on the front edge to lock it.

Theft deterrent system

To deter vehicle theft, the system is designed to sound an alarm if any of the doors, trunk or hood is forcibly unlocked or the battery terminal is disconnected and then reconnected when the vehicle is locked.

The alarm blows the horn intermittently and flashes the headlights, tail lights, turn signal lights and interior light.

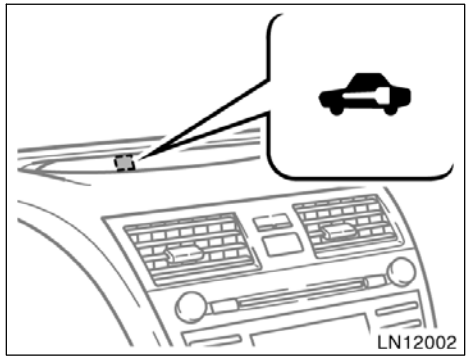

SETTING THE SYSTEM

1. Vehicles with key cylinder–type ignition switch—The key is removed from the ignition switch.

   Vehicles with smart key system—The ignition switch is turned off.

The engine immobilizer system is set and the indicator light will start flashing. (For details, see “Engine immobilizer system” on page 18 in this Section.)

2. Have all passengers get out of the vehicle.
3. Close and lock all the doors, trunk and hood.

The indicator light will remain on when all the doors, trunk and hood are closed and locked.

The theft deterrent system will automatically be set after 30 seconds. When the system is set, the indicator light will start flashing again.

4. After making sure the indicator light starts flashing, you may leave the vehicle.

Never leave anyone in the vehicle when you set the system, because unlocking from the inside will activate the system.

WHEN THE SYSTEM IS SET

Activating the system

The system will sound the alarm under the following conditions:

- If any of the doors is unlocked or if the trunk or hood is forcibly opened without the key, wireless remote control or entry function of the smart key system.
- If the battery terminal is disconnected and then reconnected.
- If the ignition is hotwired.

The indicator light will come on when the system is activated.

All the doors will be automatically locked again when the following two conditions are met:

- If any of the doors is unlocked without the key, wireless remote control or entry function of the smart key system.
- If the key is not in the ignition switch (vehicles with key cylinder–type ignition switch) or the ignition switch is set to off (vehicles with smart key system).

After one minute, the alarm will automatically stop and the indicator light will start flashing again.

Reactivating the alarm

Once set, the system automatically resets the alarm after the alarm stops.

The alarm will activate again under the same circumstances described in “Activating the system”.

Stopping the alarm

The alarm will be stopped by the following three ways:

- Set the ignition switch to ON.
- Unlock any of the doors with the key or wireless remote control.
- Open the trunk with the key, wireless remote control or entry function of the smart key system.

CANCELLING THE SYSTEM

The system will be cancelled by the above mentioned 3 ways.

If the tail lights come on for 2 seconds, the theft deterrent system has been alarmed. Check to see if there is any abnormality with your vehicle.

TESTING THE SYSTEM

1. Open all the windows.
2. Set the system as described above. The doors should be locked with the key, wireless remote control or entry function of the smart key system. Be sure to wait until the indicator light starts flashing.
3. Unlock any door from the inside. The system should activate the alarm.
4. Stop the alarm as described above.
5. Repeat this operation for the other doors, trunk and hood. When testing the hood, also check that the system is activated when the battery terminal is disconnected and then reconnected.

If the system does not work properly, have it checked by your Toyota dealer.

Fuel tank cap

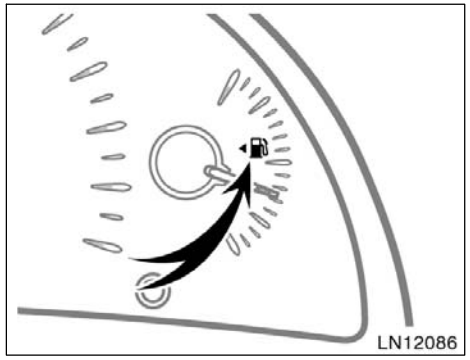

This indicates that the fuel filler door is on the left side of your vehicle.

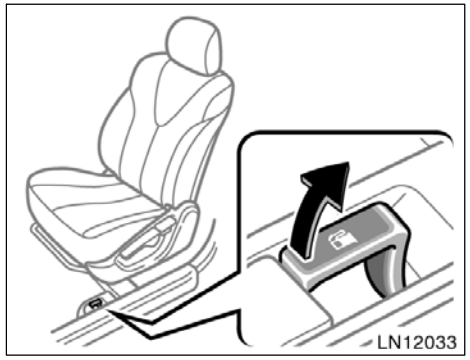

1. To open the fuel filler door, pull the lever up.

When refueling, turn off the engine.

⚠ CAUTION

- **Do not smoke, cause sparks or allow open flames when refueling. The fumes are flammable.**
- **When opening the cap, do not remove the cap quickly. In hot weather, fuel under pressure could cause injury by spraying out of the filler neck if the cap is suddenly removed.**

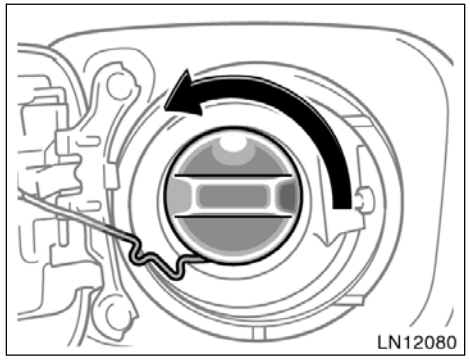

2. To remove the fuel tank cap, turn the cap slowly counterclockwise, then pause slightly before removing it.

It is not unusual to hear a slight swoosh when the cap is opened.

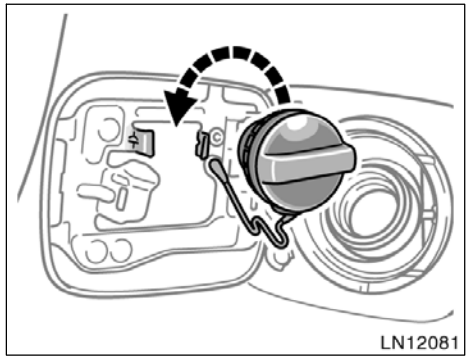

3. The removed cap can be stored on the back side of the fuel filler door.

When installing the cap, turn the cap clockwise until you hear a click. When you hear the click, the cap is fully closed.

If the cap is not installed securely, the malfunction indicator lamp comes on. Make sure the cap is tightened securely.

The indicator lamp goes off after driving several times. If the indicator lamp does not go off, contact your Toyota dealer as soon as possible.

⚠ CAUTION

- **Make sure the cap is installed securely to prevent fuel spillage in the event of an accident.**
- **Use only a genuine Toyota fuel tank cap for replacement. It is designed to regulate fuel tank pressure.**

NOTICE

To prevent damage to the cap, apply force only in the turning direction to the cap. Do not pull or pry it.

Electric moon roof

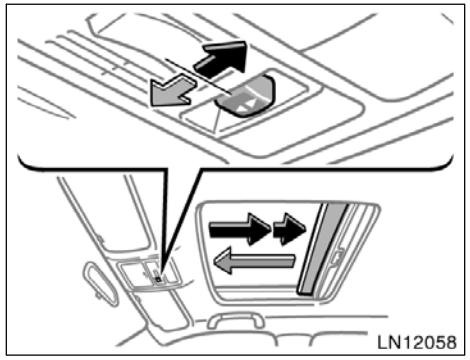

Sliding operation

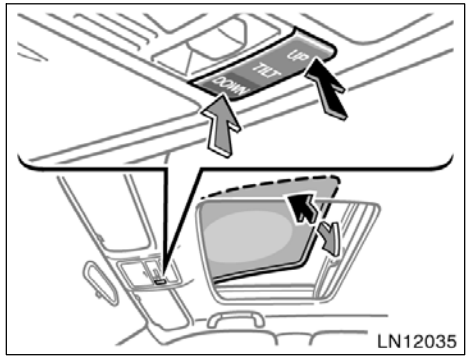

Tilting operation

To operate the moon roof, use the switches on the overhead console.

The moon roof works when the ignition switch is set at ON.

The sun shade can be opened or closed by hand.

Sliding operation—

To open: Push and hold the switch for 1 second toward the vehicle’s rear.

The roof will open and stop partway 40 mm (1.6 in.) from the fully opened position. When you push the switch again, the moon roof will open fully. To stop the roof partway, push one of the moon roof switches briefly.

As driving with the moon roof opened fully will cause wind throbs, we recommend you to drive with the moon roof partway 40 mm (1.6 in.) from the fully opened position.

The sun shade will be opened together with the roof.

To close: Push and hold the switch for 1 second toward the vehicle’s front.

The roof will fully close automatically. To stop the roof partway, push one of the moon roof switches briefly.

Tilting operation—

To tilt up: Push and hold the “TILT” switch for 1 second on the “UP” side.

The roof will fully tilt up automatically. To stop the roof partway, push one of the moon roof switches briefly.

To tilt down: Push and hold the “TILT” switch for 1 second on the “DOWN” side.

The roof will fully tilt down automatically. To stop the roof partway, push one of the moon roof switches briefly.

Key off operation: If both front doors are closed, the moon roof works for about 45 seconds even after the ignition switch is turned off. It stops working when either door is opened.

Jam protection function: If something gets caught between the moon roof and frame during closing operation, the moon roof stops and opens.

If the moon roof receives a strong impact, this function may work even if nothing is caught.

⚠ CAUTION

To avoid death or serious personal injury, you must do the following.

- **While the vehicle is moving, always keep the heads, hands and other parts of the bodies of all occupants away from the roof opening. Otherwise, they could be killed or seriously injured if the vehicle stops suddenly or if the vehicle is involved in an accident.**
- **Before you close the moon roof, always make sure there is nobody around the moon roof. You must also make sure nobody places his or her head, hands and other parts of the body in the roof opening. If someone’s neck, head or hands get caught in the closing roof, it could result in death or serious injury. When anyone closes the moon roof, first make sure it is safe to do so.**
- **Never leave anyone (particularly a small child) alone in your vehicle, especially with the ignition key still inserted. Otherwise, he/she could use the moon roof switch and get trapped in the roof opening. Unattended person (particularly a small child) can be involved in a serious accident.**
- **Never sit on top of the vehicle around the roof opening.**
- **Never try jamming any part of your body to activate the jam protection function intentionally, as it could result in a death or serious injury.**
- **The jam protection function may not work if something gets caught just before the moon roof is fully closed.**

SECTION 1 – 3

OPERATION OF INSTRUMENTS AND CONTROLS

Occupant restraint systems

Seats 56
Front seats 56
Rear seats 60
Seat heaters 63
Head restraints 64
Armrest 65
Seat belts 65
SRS airbags 76
Child restraint 95

Seats

While the vehicle is being driven, all vehicle occupants should have the seatback upright, sit well back in the seat and properly wear the seat belts provided.

⚠ CAUTION

- **Do not drive the vehicle unless the occupants are properly seated. Do not allow any passengers to sit on top of a folded–down seatback, or in the luggage compartment or cargo area. Persons not properly seated and/or not properly restrained by seat belts can be killed or severely injured in the event of emergency braking or a collision.**
- **During driving, do not allow any passengers to stand up or move around between seats. Otherwise, death or severe injuries can occur in the event of emergency braking or a collision.**

Front seats—
—Front seat precautions

Driver seat

⚠ CAUTION

The SRS driver airbag deploys with considerable force, and can cause death or serious injury especially if the driver is very close to the airbag. The National Highway Traffic Safety Administration (“NHTSA”) advises:

Since the risk zone for driver airbag is the first 50—75 mm (2—3 in.) of inflation, placing yourself 250 mm (10 in.) from your driver airbag provides you with a clear margin of safety. This distance is measured from the center of the steering wheel to your breastbone. If you sit less than 250 mm (10 in.) away now, you can change your driving position in several ways:

- **Move your seat to the rear as far as you can while still reaching the pedals comfortably.**
- **Slightly recline the back of the seat. Although vehicle designs vary, many drivers can achieve the 250 mm (10 in.) distance, even with the driver seat all the way forward, simply by reclining the back of the seat somewhat. If reclining the back of your seat makes it hard to see the road, raise yourself by using a firm, non–slippery cushion, or raise the seat if your vehicle has that feature.**
- **If your steering wheel is adjustable, tilt it downward. This points the airbag toward your chest instead of your head and neck.**

The seat should be adjusted as recommended by NHTSA above, while still maintaining control of the foot pedals, steering wheel, and your view of the instrument panel controls.

Front passenger seat

CAUTION

The SRS front passenger airbag also deploys with considerable force, and can cause death or serious injury especially if the front passenger is very close to the airbag. The front passenger seat should be as far from the airbag as possible with the seatback adjusted, so the front passenger sits upright.

Front seats (with SRS side airbags)

CAUTION

The SRS side airbags are installed in the driver and front passenger seats. Observe the following precautions.

- Do not lean against the front door when the vehicle is in use, since the side airbag inflates with considerable speed and force. Otherwise, you may be killed or seriously injured.
- Do not use seat accessories which cover the area where the side airbags inflate. Such accessories may prevent the side airbags from activating correctly, causing death or serious injury.
- Do not modify or replace the seats or upholstery of the seats equipped with side airbags. Such change may prevent the side airbag system from activating correctly, disable the system, or cause the side airbags to inflate accidentally, resulting in death or serious injury.

—Seat adjustment precautions

CAUTION

- Do not adjust the seat while the vehicle is moving as the seat may unexpectedly move and cause the driver to lose control of the vehicle.
- Be careful that the seat does not hit a passenger or luggage.
- After adjusting the seat position, release the lever and try sliding the seat forward and backward to make sure it is locked in position.
- After adjusting the seatback, push your body back against the seat to make sure the seat is locked in position.
- Do not put objects under the seats. Otherwise, the objects may interfere with the seat–lock mechanism or unexpectedly push up the seat position adjusting lever and the seat may suddenly move, causing the driver to lose control of the vehicle.

—Adjusting front seats (manual seat)

- **While adjusting the seat, do not put your hands under the seat or near the moving parts. Otherwise, your hands or fingers may be caught and injured.**

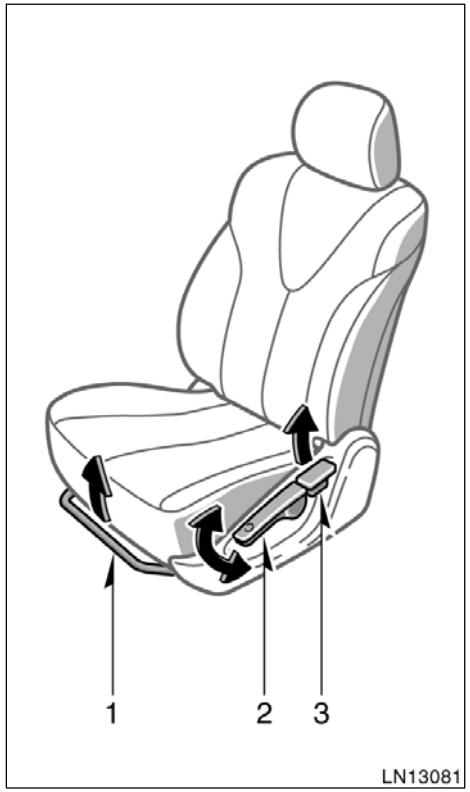

1. SEAT POSITION ADJUSTING LEVER

Hold the center of the lever and pull it up. Then slide the seat to the desired position with slight body pressure and release the lever.

2. SEAT HEIGHT ADJUSTING LEVER (driver’s seat only)

Pull up or push down the lever.

3. SEATBACK ANGLE ADJUSTING LEVER

Lean forward and pull the lever up. Then lean back to the desired angle and release the lever.

—Adjusting front seats (power seat)

⚠ CAUTION

Avoid reclining the seatback any more than needed. The seat belts provide maximum protection in a frontal or rear collision when the driver and the front passenger are sitting up straight and well back in the seats. If you are reclined, the lap belt may slide past your hips and apply restraint forces directly to the abdomen or your neck may contact the shoulder belt. In the event of a frontal collision, the more the seat is reclined, the greater the risk of death or personal injury.

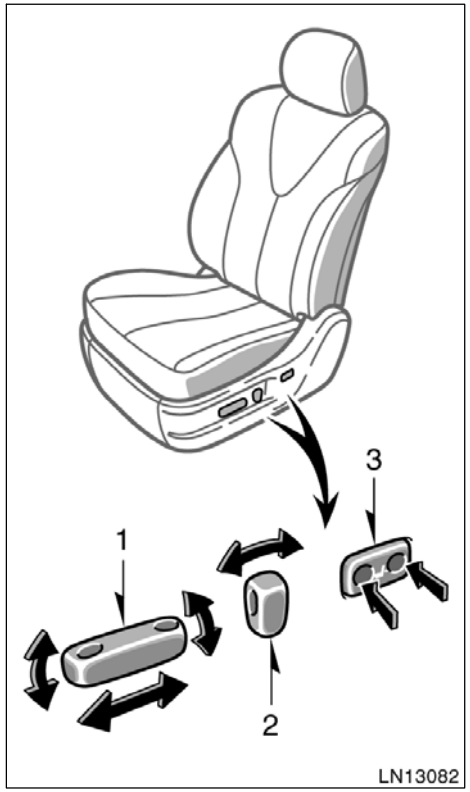

Driver’s seat

Passenger’s seat

1. **DRIVER’S SEAT: SEAT POSITION, SEAT HEIGHT AND SEAT CUSHION ANGLE ADJUSTING SWITCH**

   PASSENGER’S SEAT: SEAT POSITION ADJUSTING SWITCH

Move the control switch in the desired direction.

Releasing the switch will stop the seat at that position.

Do not place anything under the front seats, as this might interfere with the seat movement.

2. **SEATBACK ANGLE ADJUSTING SWITCH**

Move the control switch in the desired direction.

Releasing the switch will stop the seatback at that position.

⚠ CAUTION

Avoid reclining the seatback any more than needed. The seat belts provide maximum protection in a frontal or rear collision when the driver and the front passenger are sitting up straight and well back in the seats. If you are reclined, the lap belt may slide past your hips and apply restraint forces directly to the abdomen or your neck may contact the shoulder belt. In the event of a frontal collision, the more the seat is reclined, the greater the risk of death or personal injury.

3. **SEAT LUMBAR SUPPORT ADJUSTING SWITCH**

Push the control switch in the desired direction.

The amount of lumbar support will change while the switch is pushed.

Rear seats—
—Adjusting rear seats (reclining type seat)

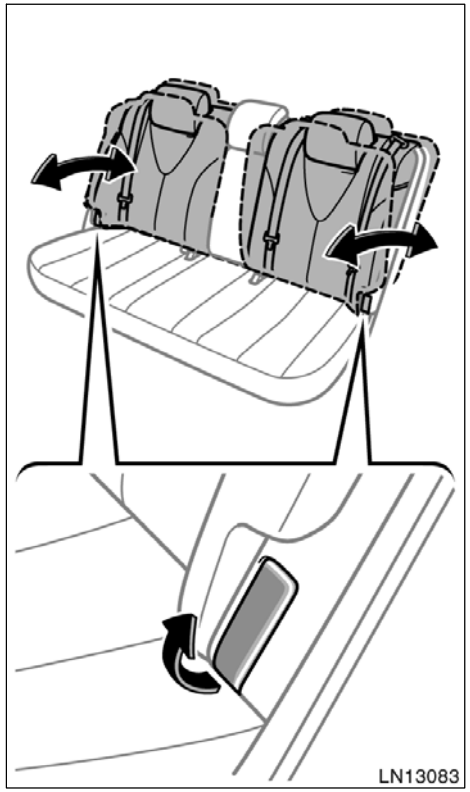

SEATBACK ANGLE ADJUSTING LEVER

Lean forward and pull the lever. Then lean back to the desired angle and release the lever.

CAUTION

- **Adjustment should not be made while the vehicle is moving.**
- **When adjusting the seat, be careful that the seat does not hit a passenger or luggage.**
- **After adjusting the seatback, push back your body to make sure it is locked in position.**
- **When operating the seat, be careful not to get your hands or feet pinched in the seat.**

—Trunk storage extension (reclining type and fixed type seats)

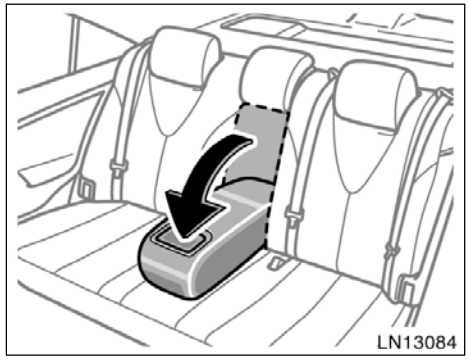

1. **Pull down the armrest in the rear seat.**

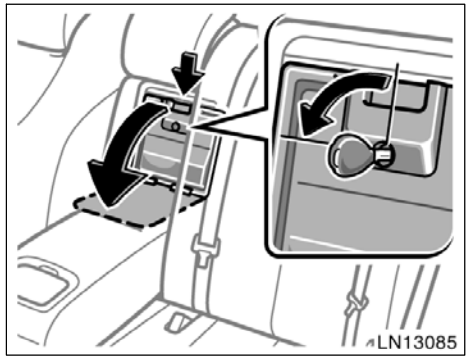

2. **Push down the handle and open the door.**

If the door is locked, insert the key and turn it counterclockwise to unlock. Use the master key (vehicles with the key cylinder–type ignition switch) or mechanical key (vehicles with the smart key system).

Lock the door after use to protect items in the trunk.

See “—Stowage precautions” on page 310 in Section 2 for precautions when loading luggage.

CAUTION

To reduce the chance of injury in case of an accident or a sudden stop, always keep the door behind the armrest closed when not in use.

—Fold-down rear seat (fold-down type seat)

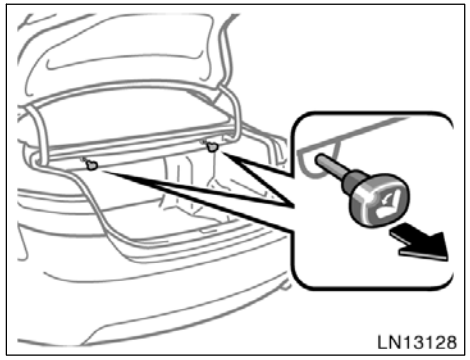

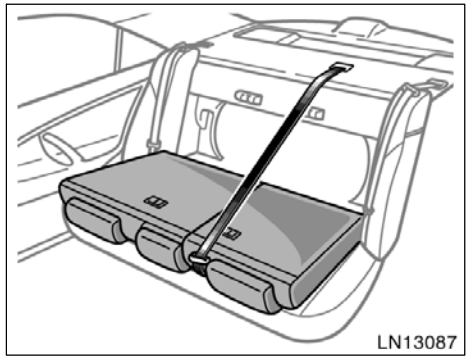

FOLDING DOWN REAR SEAT

1. **To unlock the seatback, pull the lever in the trunk.**
2. **Fold down the seatback.**

Each seatback can be folded separately.

This will enlarge the trunk as far as the seatbacks. See “—Stowage precautions” on page 310 in Section 2 for precautions when loading luggage.

NOTICE

Make sure the luggage loaded in the enlarged trunk will not damage the webbing of the rear center seat belt when the right seatback is folded down.

CAUTION

When returning the seatback to the upright position, observe the following precautions in order to prevent death or serious injury in a collision or sudden stop:

- **Make sure the seatback is securely locked by pushing forward and rearward on the top of the seatback. Failure to do so will prevent the seat belt from operating properly.**
- **Make sure the seat belts are not twisted or caught in the seatback and are arranged in the proper position and are ready to use.**

Seat heaters

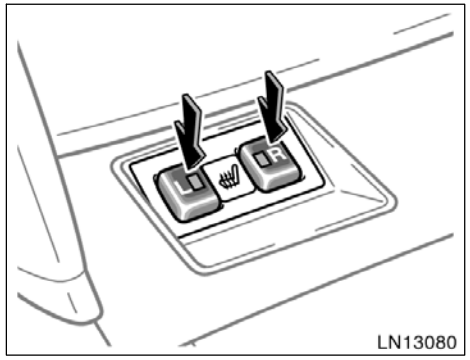

To turn on the seat heater, push the switch. At this time, the indicator light will illuminate to indicate the seat heater is operating.

To turn off the seat heater, push the switch once again.

The ignition switch must be set at ON to operate seat heaters.

CAUTION

Occupants must use caution when operating the seat heater because it may make them feel too hot or cause burns at low temperatures (erythema, varicella). Use extra caution for the following:

- **Babies, small children, elderly persons, sick persons or persons with physical disabilities**
- **Persons who have sensitive skin**
- **Persons who are exhausted**
- **Persons who have taken alcohol or drugs which induce sleep (sleeping drug, cold remedy, etc.)**

To prevent the seat overheating, do not use the seat heater with a blanket, cushion, or other insulating objects which cover the seat.

NOTICE

- ***Do not put unevenly weighed objects on the seat and do not stick sharp objects (needles, nails, etc.) into the seat.***
- ***When cleaning the seats, do not use organic substances (paint thinner, benzine, alcohol, gasoline, etc.). They may damage the heater and seat surface.***
- ***To prevent the battery from being discharged, turn the switch off when the engine is not running.***

Head restraints

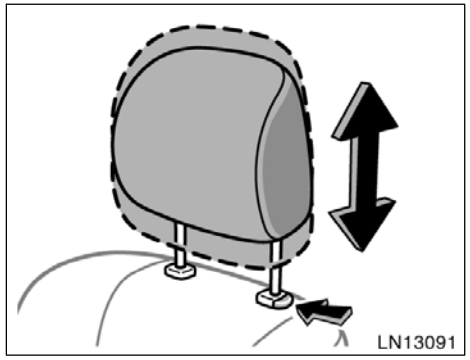

Front

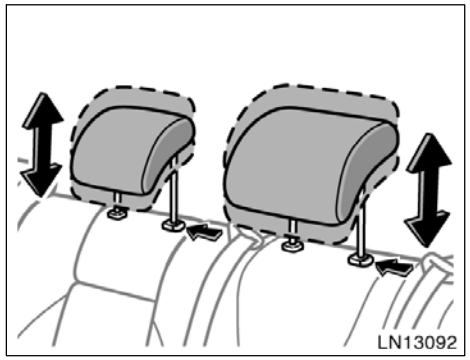

Rear (type A)

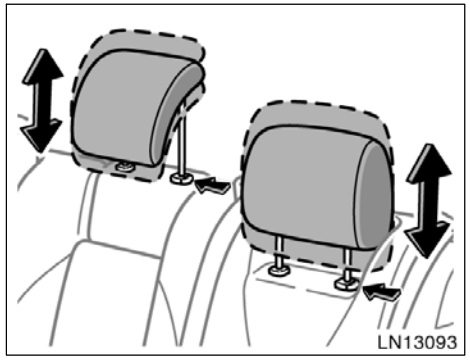

Rear (type B)

For your safety and comfort, adjust the head restraint before driving.

To raise: Pull it up.
To lower: Push it down while pressing the lock release button.

Rear center head restraint—When an occupant sits on the rear center seat, always pull up the rear center head restraint to the lock position.

The head restraint is most effective when it is close to your head. Therefore, using a cushion on the seatback is not recommended.

CAUTION

- **Adjust the center of the head restraint so that it is closest to the top of your ears.**
- **After adjusting the head restraint, make sure it is locked in position.**
- **Do not drive with the head restraints removed.**

Armrest

To use the armrest, pull it out as shown above.

Seat belts—
—Seat belt precautions

Toyota strongly urges that the driver and passengers in the vehicle be properly restrained at all times with the seat belts provided. Failure to do so could increase the chance of injury and/or the severity of injury in accidents.

The seat belts provided for your vehicle are designed for people of adult size, large enough to properly wear them.

Child. Use a child restraint system appropriate for the child until the child becomes large enough to properly wear the vehicle’s seat belts. See “Child restraint” on page 95 in this Section for details.

If a child is too large for a child restraint system, the child should sit in the rear seat and must be restrained using the vehicle’s seat belt. According to accident statistics, the child is safer when properly restrained in the rear seat than in the front seat.

If a child must sit in the front seat, the seat belts should be worn properly. If an accident occurs and the seat belts are not worn properly, the force of the rapid inflation of the airbag may cause death or serious injury to the child.

Do not allow any children to stand up or kneel on either rear or front seats. An unrestrained child could suffer serious injury or death during emergency braking or a collision. Also, do not let the child sit on your lap. Holding a child in your arms does not provide sufficient restraint.

Pregnant woman. Toyota recommends the use of a seat belt. Ask your doctor for specific recommendations. The lap belt should be worn securely and as low as possible over the hips and not on the waist.

Injured person. Toyota recommends the use of a seat belt. Depending on the injury, first check with your doctor for specific recommendations.

⚠ CAUTION

Persons should ride in their seats properly wearing their seat belts whenever the vehicle is moving. Otherwise, they are much more likely to suffer serious bodily injury or death in the event of sudden braking or a collision.

When using the seat belts, observe the following:

- **Use the belt for only one person at a time. Do not use a single belt for two or more people—even children.**
- **Avoid reclining the seatback any more than needed. The seat belts provide maximum protection in a frontal or rear collision when the driver and the front passenger are sitting up straight and well back in the seats. If you are reclined, the lap belt may slide past your hips and apply restraint forces directly to the abdomen or your neck may contact the shoulder belt. In the event of a frontal collision, the more the seat is reclined, the greater the risk of death or personal injury.**
- **Be careful not to damage the belt webbing or hardware. Take care that they do not get caught or pinched in the seat or doors.**
- **Inspect the belt system periodically. Check for cuts, fraying, and loose parts. Damaged parts should be replaced. Do not disassemble or modify the system.**
- **Keep the belts clean and dry. If they need cleaning, use a mild soap solution or lukewarm water. Never use bleach, dye, or abrasive cleaners, or allow them to come into contact with the belts—they may severely weaken the belts. (See “Cleaning the interior” on page 361 in Section 5.)**
- **Replace the belt assembly (including bolts) if it has been used in a severe impact. The entire assembly should be replaced even if damage is not obvious.**

—Fastening front and rear seat belts

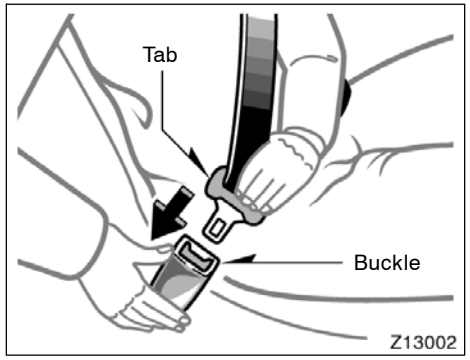

Adjust the seat as needed and sit up straight and well back in the seat. To fasten your belt, pull it out of the retractor and insert the tab into the buckle.

You will hear a click when the tab locks into the buckle.

The seat belt length automatically adjusts to your size and the seat position.

The retractor will lock the belt during a sudden stop or on impact. It also may lock if you lean forward too quickly. A slow, easy motion will allow the belt to extend, and you can move around freely.

When a passenger’s shoulder belt is completely extended and is then retracted even slightly, the belt is locked in that position and cannot be extended. This feature is used to hold the child restraint system securely. (For details, see “Child restraint” on page 95 in this Section.) To free the belt again, fully retract the belt and then pull the belt out once more.

If the seat belt cannot be pulled out of the retractor, firmly pull the belt and release it. You will then be able to smoothly pull the belt out of the retractor.

⚠ CAUTION

- **After inserting the tab, make sure the tab and buckle are locked and that the belt is not twisted.**
- **Do not insert coins, clips, etc. in the buckle as this may prevent you from properly latching the tab and buckle.**
- **If the seat belt does not function normally, immediately contact your Toyota dealer. Do not use the seat until the seat belt is fixed, because it cannot protect an adult occupant or your child from death or serious injury.**

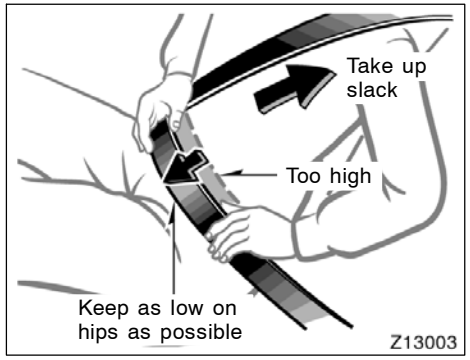

Adjust the position of the lap and shoulder belts.

Position the lap belt as low as possible on your hips—not on your waist, then adjust it to a snug fit by pulling the shoulder portion upward through the latch plate.

CAUTION

- **Both high–positioned lap belts and loose–fitting belts could cause serious injuries due to sliding under the lap belt during a collision or other unintended event. Keep the lap belt positioned as low on hips as possible.**
- **Do not place the shoulder belt under your arm.**

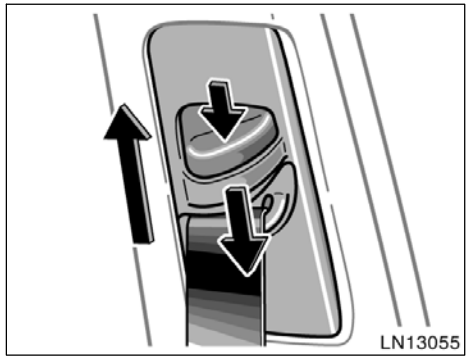

Seat belts with an adjustable shoulder anchor—

Adjust the shoulder anchor position to your size.

To raise: Slide the anchor up.
To lower: Push in the lock release button and slide the anchor down.

After adjustment make sure the anchor is locked in position.

CAUTION

Always make sure the shoulder belt is positioned across the center of your shoulder. The belt should be kept away from your neck, but not falling off your shoulder. Failure to do so could reduce the amount of protection in an accident and cause death or serious injures in a collision.

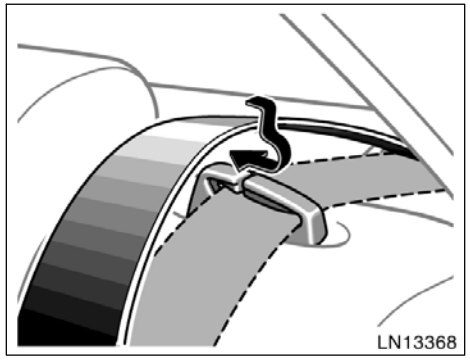

Rear seat belts—

Use the seat belt after passing it through the guide if the seat belt comes free from the guide.

CAUTION

- **Always make sure the shoulder belt passes through the guide when using the seat belt. Failure to properly position the belt may reduce the amount of protection in an accident and could lead to serious injures in a collision or sudden stop.**
- **Always make sure that the seat belt is not twisted, does not get caught in the guide or the seatback and is arranged in the proper position.**

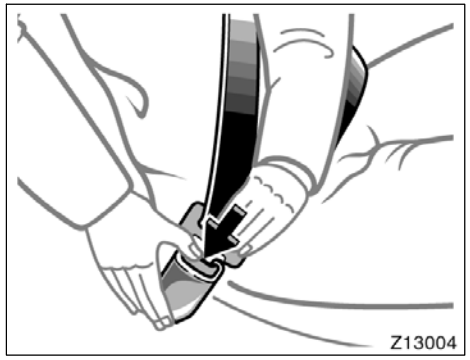

To release the belt, press the buckle release button and allow the belt to retract.

If the belt does not retract smoothly, pull it out and check for kinks or twists. Then make sure it remains untwisted as it retracts.

—Seat belt comfort guides

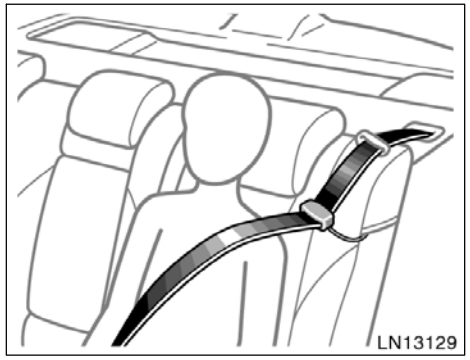

The outside shoulder belt comfort guides for the rear seat outside positions will provide added seat belt comfort for children who have outgrown child restraints and for small adults. When the outside shoulder belt is inserted through the guide, the comfort guide pulls the belt away from the neck and head of an occupant.

To use the comfort guide, do as follows.

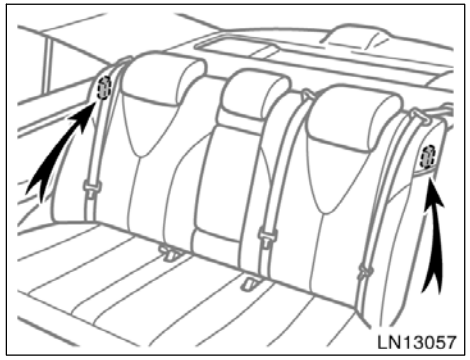

Seat belt comfort guides are stored in the both pockets on the sides of the rear seatback.

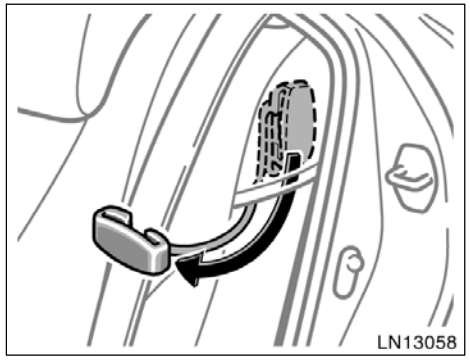

INSTALLING THE COMFORT GUIDE

Vehicles with reclining type rear seat—Adjust the seatback to the upright most position.

1. **Pull out the comfort guide from the pocket.**

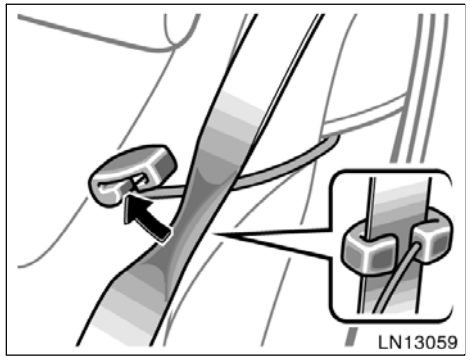

2. Pinch the two edges of the shoulder belt for the rear seat outside position with your fingers and slide the belt past the slot of the guide as shown above. At this time, the elastic cord must be behind the seat belt.

CAUTION

Make sure the belt is not twisted and that it lies flat. The elastic cord must be behind the belt and the guide must be on the front.

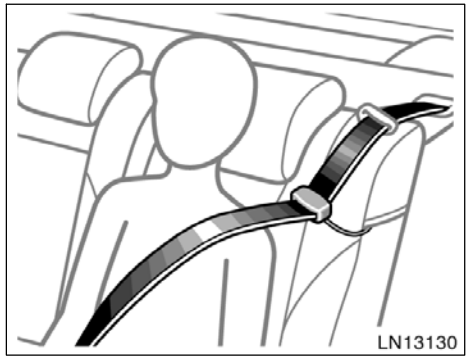

3. Buckle, position and release the seat belt. (For wearing the seat belt, see “—Fastening front and rear seat belts” on page 67 in this Section.)

CAUTION

Always make sure the shoulder belt is positioned across the center of the shoulder. The belt should be kept away from the neck, and should not fall off the shoulder. Failure to observe these precautions could reduce the effectiveness of the seat belt in an accident, causing death or serious injury.

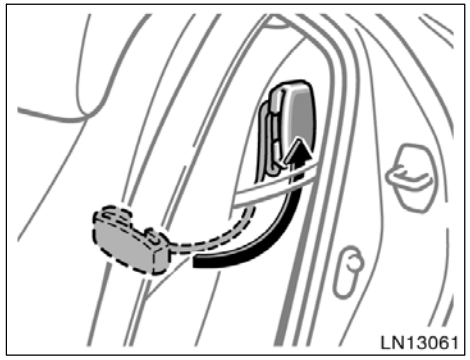

REMOVING AND STORING THE COMFORT GUIDE

Pinch the two edges of the seat belt together so that you can slide them out of the guide. Store the guide with the elastic cord into the pocket.

CAUTION

To reduce the chance of injury in case of an accident or a sudden stop while driving, remove and store the comfort guide in its pocket when it is not in use.

—Seat belt extender

If your seat belts cannot be fastened securely because they are not long enough, a personalized seat belt extender is available from your Toyota dealer free of charge.

Please contact your local Toyota dealer to order the proper required length for the extender. Bring the heaviest coat you expect to wear for proper measurement and selection of length. Additional ordering information is available at your Toyota dealer.

⚠ CAUTION

When using the seat belt extender, observe the following precautions. Failure to follow these instructions could reduce the effectiveness of the seat belt restraint system in case of an accident, increasing the chance of death or serious injury.

- **Remember that the extender provided for you may not be safe when used on a different vehicle, for another person, or at a different seating position than the one originally intended.**

- **If the seat belt extender has been connected to the driver’s seat belt buckle without wearing the seat belt when using the extender in the driver’s seat, the SRS driver’s airbag system will judge that the driver wears the seat belt even if not wearing it. In this case, the driver’s airbag may not activate correctly, causing death or serious injury in the event of collision. Be sure to wear the seat belt with the seat belt extender.**

- **Make sure the “AIRBAG ON” indicator light is illuminated when using the seat belt extender for the front passenger seat. If the “AIRBAG OFF” indicator light is illuminated, disconnect the extender tongue from the seat belt buckle, then reconnect the seat belt. Reconnect the seat belt extender after making sure the “AIRBAG ON” indicator light is illuminated. If you use the seat belt extender while the “AIRBAG OFF” indicator light is illuminated, the front passenger airbag and side airbag on the front passenger side may not activate correctly, causing death or serious injury in the event of collision.**
- **Be sure to wear the seat belt without the seat belt extender if you can fasten the seat belt without the extender.**

- **Do not use the seat belt extender when installing a child restraint system on the front or rear passenger seat. If installing a child restraint system with the seat belt extender connected to the seat belt, the seat belt will not securely hold the child restraint system, which could cause death or serious injury to the child or other passengers in the event of collision.**

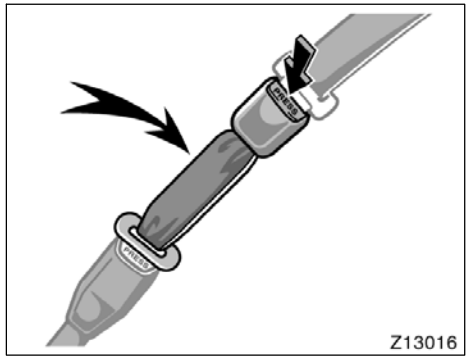

To connect the extender to the seat belt, insert the tab into the seat belt buckle so that the “PRESS” signs on the buckle release buttons of the extender and the seat belt are both facing outward as shown.

You will hear a click when the tab locks into the buckle.

When releasing the seat belt, press on the buckle release button on the extender, not on the seat belt. This helps prevent damage to the vehicle interior and extender itself.

As far as the seat belt extender on the front passenger side is concerned, do not fail to disconnect the extender from the seat belt after the above operation in order to activate the front passenger airbag correctly when getting into the vehicle next time.

When not in use, remove the extender and store in the vehicle for future use.

⚠ CAUTION

- **After inserting the tab, make sure the tab and buckle are locked and that the lap and shoulder portions of the belt and the seat belt extender are not twisted.**
- **Do not insert coins, clips, etc. in the buckle as this may prevent you from properly latching the tab and buckle.**
- **If the seat belt does not function normally, immediately contact your Toyota dealer. Do not use the seat until the seat belt is fixed, because it cannot protect an adult occupant or your child from death or serious injury.**

—Seat belt pretensioners

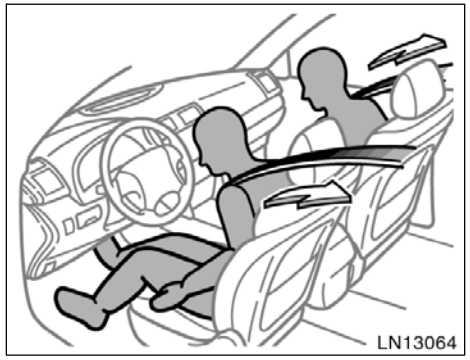

The driver and front passenger seat belt pretensioners are designed to be activated in response to a severe frontal impact.

When the sensor detects a severe frontal impact, the front seat belts are quickly drawn back by the retractors so that the belts snugly restrain the occupants.

The front passenger’s seat belt pretensioner will not activate if no passenger is detected in the front passenger seat by the front passenger occupant classification system. However, the front passenger’s seat belt pretensioner may activate if luggage is put on the seat, or the seat belt is buckled up regardless of the presence of an occupant in the seat. (As for the front passenger occupant classification system, see “—Front passenger occupant classification system” on page 91 in this Section.)

The seat belt pretensioners and SRS airbags may not operate together in all collisions.

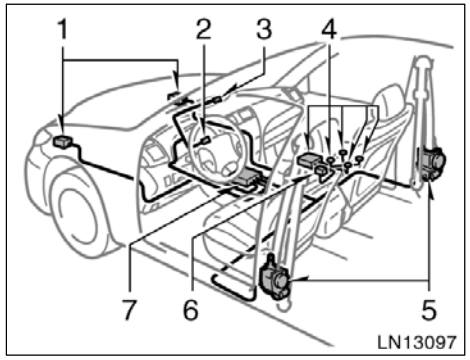

The seat belt pretensioner system consists mainly of the following components and their locations are shown in the illustration.

1. Front airbag sensors
2. SRS warning light
3. “AIRBAG ON” and “AIRBAG OFF” indicator lights (for front passenger airbag and side airbag on the front passenger seat)
4. Front passenger occupant classification system (ECU and sensors)
5. Seat belt pretensioner assemblies
6. Front passenger’s seat belt buckle switch

7. Airbag sensor assembly

The seat belt pretensioners are controlled by the airbag sensor assembly. The airbag sensor assembly consists of a safing sensor and airbag sensor.

When the seat belt pretensioners are activated, an operating noise may be heard and a small amount of non–toxic gas may be released. This does not indicate that a fire is occurring. This gas is normally harmless.

Once the seat belt pretensioners have been activated, the seat belt retractors remain locked.

⚠ CAUTION

Do not modify, remove, strike or open the seat belt pretensioner assemblies, airbag sensor or surrounding area or wiring. Failure to follow these instructions may prevent the seat belt pretensioners from activating correctly, cause sudden operation of the system or disable the system, which could result in death or serious injury. Consult your Toyota dealer about any repair and modification.

NOTICE

Do not perform any of the following changes without consulting your Toyota dealer. Such changes can interfere with proper operation of the seat belt pretensioners in some cases.

- ***Installation of electronic devices such as a mobile two–way radio, cassette tape player or compact disc player***
- ***Repairs on or near the front seat belt retractor assemblies***
- ***Modification of the suspension system***
- ***Modification of the front end structure***
- ***Attachment of a grille guard (bull bar, kangaroo bar, etc.), snowplow, winches or any other equipment to the front end***
- ***Repairs made on or near the front fenders, front end structure or console***

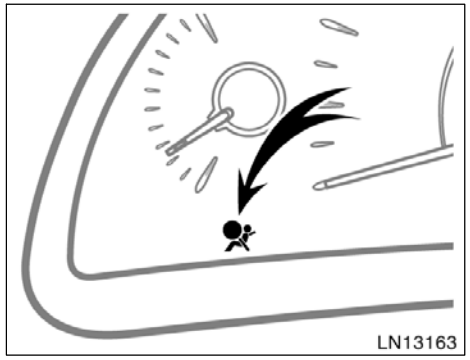

This indicator comes on when the ignition switch is set at ON. It goes off after about 6 seconds. This means the seat belt pretensioners are operating properly.

This warning light system monitors the airbag sensor assembly, front airbag sensors, side and curtain shield airbag sensors, curtain shield airbag sensors, driver’s seat position sensor, driver’s seat belt buckle switch, front passenger occupant classification system, “AIRBAG ON” indicator light, “AIRBAG OFF” indicator light, front passenger’s seat belt buckle switch, seat belt pretensioner assemblies, inflators, interconnecting wiring and power sources. (For details, see “Service reminder indicators and warning buzzers” on page 146 in Section 1–6.)

If any of the following conditions occurs, this indicates a malfunction of the airbags or seat belt pretensioners. Contact your Toyota dealer as soon as possible.

- The light does not come on when the ignition switch is set at ON or remains on for more than about 6 seconds.
- The light comes on or starts flashing while driving.
- If any seat belt does not retract or cannot be pulled out due to a malfunction or activation of the relevant seat belt pretensioner.
- The seat belt pretensioner assembly or surrounding area has been damaged.

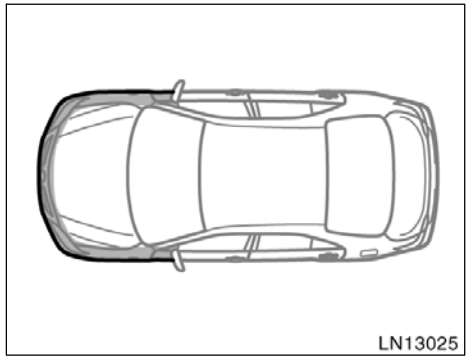

In the following cases, contact your Toyota dealer as soon as possible:

- The front of the vehicle (shaded in the illustration) was involved in an accident that was not severe enough to cause the seat belt pretensioners to operate.
- Either seat belt pretensioner assembly or surrounding area is scratched, cracked, or otherwise damaged.

SRS airbags—
—SRS driver airbag, driver knee airbag and front passenger airbag

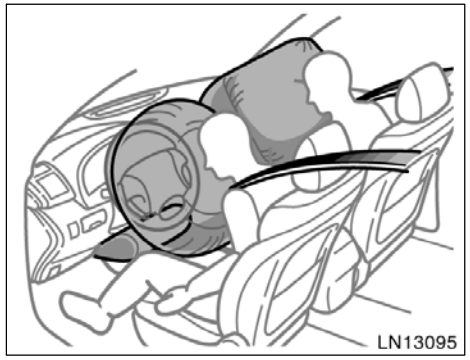

The SRS (Supplemental Restraint System) front airbags are designed to provide further protection for the driver and front passenger in addition to the primary safety protection provided by the seat belts.

Your vehicle is equipped with “ADVANCED AIRBAGS” designed based on US motor vehicle safety standards (FMVSS208). The airbag system controls airbag deployment power for the driver and front passenger. The driver airbag system consists of the driver seat’s position sensor etc. The front passenger’s airbag system consists of the front passenger occupant classification sensor etc.

In response to a severe frontal impact, the SRS front airbags work with the seat belts to help reduce injury by inflating. The SRS front airbags help reduce injuries mainly to the driver’s or front passenger’s head, chest or knee caused by hitting the vehicle interior.

The SRS front passenger airbag will not activate if there is no passenger sitting in the front passenger seat. However, the front passenger airbag may deploy if luggage is put in the seat, or the seat belt is buckled up, regardless of the presence of an occupant in the seat. (As for the front passenger occupant classification system, see “—Front passenger occupant classification system” on page 91 in this Section.)

Always wear your seat belt properly.

CAUTION

- **The SRS front airbag system is designed only as a supplement to the primary protection of the driver and front passenger seat belt systems. The driver and front passenger can be killed or seriously injured by the inflating airbags if they do not wear the available seat belts properly. During sudden braking just before a collision, an unrestrained driver or front passenger can move forward into direct contact with or close proximity to the airbag which may then deploy during the collision. To ensure maximum protection in an accident, the driver and all passengers in the vehicle must wear their seat belts properly. Wearing a seat belt properly during an accident reduces the chances of death or serious injury or being thrown out of the vehicle. For instructions and precautions concerning the seat belt system, see “Seat belts” on page 65 in this Section.**

- **Improperly seated and/or restrained infants and children can be killed or seriously injured by the deploying airbags. An infant or child who is too small to use a seat belt should be properly secured using a child restraint system. Toyota strongly recommends that all infants and children be placed in the rear seat of the vehicle and properly restrained. The rear seat is the safest for infants and children. For instructions concerning the installation of a child restraint system, see “Child restraint” on page 95 in this Section.**

The SRS front airbags are designed to deploy in severe (usually frontal) collisions where the magnitude and duration of the forward deceleration of the vehicle exceeds the designed threshold level.

The SRS front airbags will deploy if the severity of the impact is above the designed threshold level, comparable to an approximate 25 km/h (15 mph) collision when the vehicle has the impact straight into a fixed barrier that does not move or deform.

However, this threshold velocity will be considerably higher if the vehicle strikes an object, such as a parked vehicle or sign pole, which can move or deform on impact, or if the vehicle is involved in an underride collision (e.g. a collision in which the front of the vehicle “underrides”, or goes under, the bed of a truck, etc.).

It is possible that in some collisions where the forward deceleration of the vehicle is very close to the designed threshold level, the SRS front airbags and the seat belt pretensioners may not activate together.

Always wear your seat belts properly.

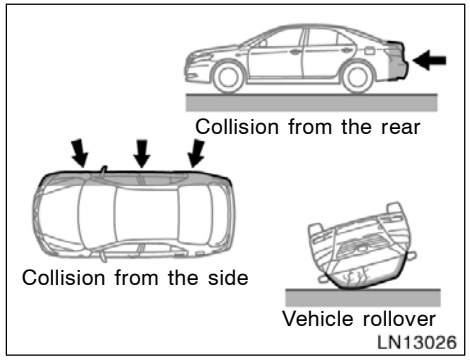

The SRS front airbags are not generally designed to inflate if the vehicle is involved in a side or rear collision, if it rolls over, or if it is involved in a low–speed frontal collision. But, whenever a collision of any type causes sufficient forward deceleration of the vehicle, deployment of the SRS front airbags may occur.

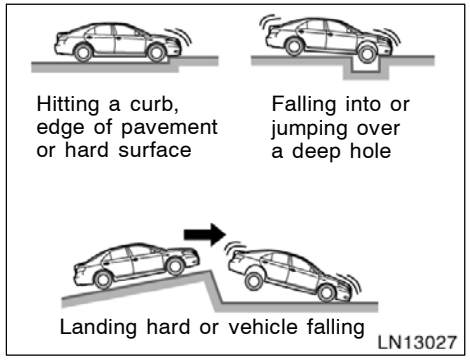

The SRS front airbags may also deploy if a serious impact occurs to the underside of your vehicle. Some examples are shown in the illustration.

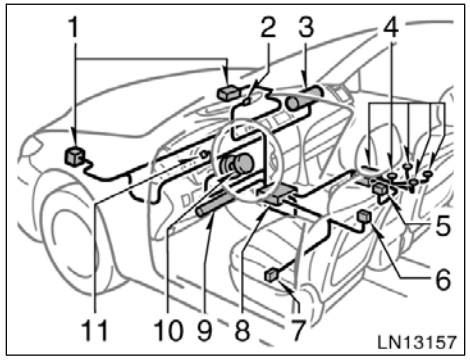

With manual driver’s seat

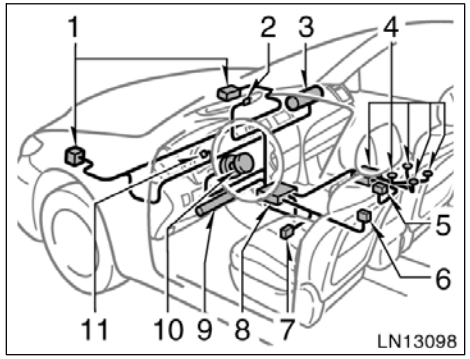

With power driver’s seat

The SRS front airbag system consists mainly of the following components, and their locations are shown in the illustration.

1. Front airbag sensors
2. “AIRBAG ON” and “AIRBAG OFF” indicator lights (for front passenger airbag and side airbag on the front passenger seat)
3. Airbag module for front passenger (airbag and inflator)
4. Front passenger occupant classification system (ECU and sensors)
5. Front passenger’s seat belt buckle switch
6. Driver’s seat belt buckle switch
7. Driver’s seat position sensor
8. Airbag sensor assembly
9. Knee airbag module for driver (airbag and inflator)
10. Airbag module for driver (airbag and inflator)
11. SRS warning light

The airbag sensor assembly consists of a safing sensor and airbag sensor.

The front airbag sensors constantly monitor the forward deceleration of the vehicle. If an impact results in a forward deceleration beyond the designed threshold level, the system triggers the airbag inflators. At this time a chemical reaction in the inflators very quickly fills the airbags with non–toxic gas to help restrain the forward motion of the occupants. The front airbags then quickly deflate, so that there is no obstruction of the driver’s vision should it be necessary to continue driving.

When the airbags inflate, they produce a loud noise and release some smoke and residue along with non–toxic gas. This does not indicate a fire. This smoke may remain inside the vehicle for some time, and may cause some minor irritation to the eyes, skin or breathing. Be sure to wash off any residue as soon as possible to prevent any potential skin irritation with soap and water. If you can safely exit from the vehicle, you should do so immediately.

Deployment of the airbags happens in a fraction of a second, so the airbags must inflate with considerable force. While the system is designed to reduce serious injuries, primarily to the head and chest, it may also cause other, less severe injuries to the face, chest, arms and hands. These are usually in the nature of minor burns or abrasions and swelling, but the force of a deploying airbag can cause more serious injuries, especially if an occupant’s hands, arms, chest or head is in close proximity to the airbag module at the time of deployment. This is why it is important for the occupant to; avoid placing any object or part of the body between the occupant and the airbag module; sit straight and well back into the seat; wear the available seat belt properly; and sit as far as possible from the airbag module, while still maintaining control of the vehicle.

Parts of the airbag module (steering wheel hub, lower portion of driver’s side instrument panel, airbag cover and inflator) may be hot for several minutes after deployment, so do not touch! The airbags inflate only once. The windshield may be damaged by absorbing some of the force of the inflating airbag.

⚠ CAUTION

The driver or front passenger who is too close to the steering wheel, lower portion of driver’s side instrument panel or dashboard during airbag deployment can be killed or seriously injured. Toyota strongly recommends that:

- **The driver sit as far back as possible from the steering wheel while still maintaining control of the vehicle.**
- **The front passenger sit as far back as possible from the dashboard.**
- **All vehicle occupants be properly restrained using the available seat belts.**

For instructions and precautions concerning the seating position, see “—Front seat precautions” on page 56 in this Section.

- **Do not sit on the edge of the seat or lean against the dashboard when the vehicle is in use, since the front passenger airbag could inflate with considerable speed and force. Anyone who is up against, or very close to, an airbag when it inflates, can be killed or seriously injured. Sit up straight and well back in the seat, and always use your seat belt properly.**

- Toyota strongly recommends that all infants and children be placed in the rear seat of the vehicle and be properly restrained.
- Do not hold a child on your lap or in your arms. Use a child restraint system in the rear seat. For instructions concerning the installation of a child restraint system, see “Child restraint” on page 95 in this Section.

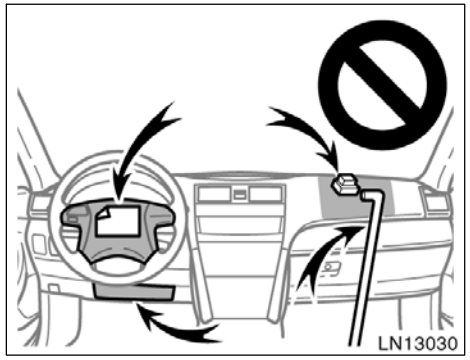

- Do not put anything or any part of your body on or in front of the dashboard, lower portion of driver’s side instrument panel or steering wheel pad that houses the front airbag system. They might restrict inflation or cause death or serious injury as they are projected rearward by the force of the deploying airbags. Likewise, the driver and front passenger should not hold objects in their arms or on their knees.

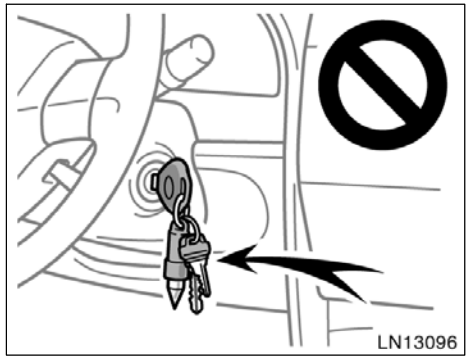

- Vehicles with key cylinder–type ignition switch—Do not attach any heavy, sharp or hard objects such as keys or accessories to the ignition switch. The objects may restrict the SRS knee airbag inflation or be thrust into the driver’s seat area by the force of the deploying airbag, thus causing a danger.

- **Do not modify or remove any wiring. Do not modify, remove, strike or open any components such as the steering wheel pad, steering wheel, column cover, dashboard near the front passenger airbag, front passenger airbag cover, front passenger airbag, driver knee airbag or airbag sensor assembly. Doing so may prevent the front airbag system from activating correctly, cause sudden activation of the system or disable the system, which could result in death or serious injury.**

Failure to follow these instructions can result in death or serious injury. Consult your Toyota dealer about any repair and modification.

If you wish to modify your vehicle for a person with a physical disability, consult your Toyota dealer. It may dangerously interfere with the SRS front airbags operation.

NOTICE

Do not perform any of the following changes without consulting your Toyota dealer. Such changes can interfere with proper operation of the SRS front airbag system in some cases.

- ***Installation of electronic devices such as a mobile two-way radio, cassette tape player or compact disc player***
- ***Modification of the suspension system***
- ***Modification of the front end structure***
- ***Attachment of a grille guard (bull bar, kangaroo bar, etc.), snowplow, winches or any other equipment to the front end***
- ***Repairs made on or near the front fenders, front end structure, console, steering column, steering wheel or dashboard near the front passenger airbag***

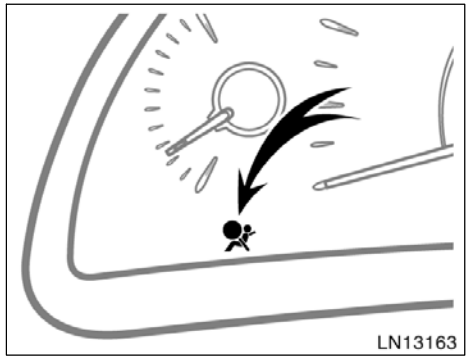

The indicator comes on when the ignition switch is set at ON. It goes off after about 6 seconds. This means the SRS front airbags are operating properly.

This warning light system monitors the airbag sensor assembly, front airbag sensors, side and curtain shield airbag sensors, curtain shield airbag sensors, driver’s seat position sensor, driver’s seat belt buckle switch, front passenger occupant classification system, “AIRBAG ON” indicator light, “AIRBAG OFF” indicator light, front passenger’s seat belt buckle switch, seat belt pretensioner assemblies, inflators, interconnecting wiring and power sources. (For details, see “Service reminder indicators and warning buzzers” on page 146 in Section 1–6.)

If any of the following conditions occurs, this indicates a malfunction of the airbags or seat belt pretensioners. Contact your Toyota dealer as soon as possible.

- The light does not come on when the ignition switch is set at ON or remains on for more than about 6 seconds.
- The light comes on or starts flashing while driving.

The SRS warning light and “AIRBAG OFF” indicator light will come on if there is a malfunction in the front passenger occupant classification system.

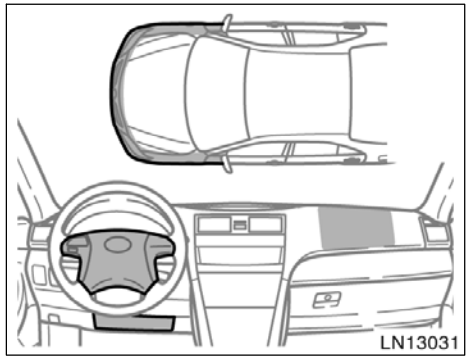

In the following cases, contact your Toyota dealer as soon as possible:

- The SRS front airbags have been inflated.
- The front of the vehicle (shaded in the illustration) was involved in an accident that was not severe enough to cause the SRS front airbags to inflate.
- The pad section of the steering wheel or front passenger airbag cover (shaded in the illustration) is scratched, cracked, or otherwise damaged.

NOTICE

Do not disconnect the battery cables before contacting your Toyota dealer.

—SRS side airbags and curtain shield airbags

The SRS (Supplemental Restraint System) side airbags and curtain shield airbags are designed to provide further protection for the driver, front passenger and rear outside passengers in addition to the primary safety protection provided by the seat belts.

In response to a severe side impact, the SRS side airbags and curtain shield airbags work with the seat belts to help reduce injury by inflating. The SRS side airbags help reduce injuries mainly to the driver’s or front passenger’s chest, and the SRS curtain shield airbags help reduce injuries mainly to the driver’s, front passenger’s or rear outside passenger’s head.

The SRS side airbag on the passenger seat will not activate if there is no passenger sitting in the front passenger seat. However, the side airbag on the passenger seat may deploy if luggage is put in the seat, or the seat belt is buckled up regardless of the presence of the occupant in the seat. (As for the front passenger occupant classification system, see “—Front passenger occupant classification system” on page 91 in this Section.)

The SRS curtain shield airbag on the passenger side are activated even with no passenger in the front seat or rear outside seat.

The SRS curtain shield airbags may activate even when the side airbags are not activated.

Always wear your seat belt properly.

⚠ CAUTION

- **The SRS side airbag and curtain shield airbag system is designed only as a supplement to the primary protection of the driver, front passenger and rear outside passenger seat belt systems. To ensure maximum protection in an accident, the driver and all passengers in the vehicle must wear their seat belts properly. Wearing a seat belt properly during an accident reduces the chances of death or serious injury or being thrown out of the vehicle. For instructions and precautions concerning the seat belt system, see “Seat belts” on page 65 in this Section.**

- **Do not allow anyone to lean his/her head or any part of his/her body against the door or the area of the seat, front pillar, rear pillar or roof side rail from which the SRS side airbag and curtain shield airbag deploy even if he/she is a child seated in the child restraint system. It is dangerous if the SRS side airbag and curtain shield airbag inflate, and the impact of the deploying airbag could cause death or serious injury to the occupant.**

- **Improperly seated and/or restrained infants and children can be killed or seriously injured by the deploying airbags. An infant or child who is too small to use a seat belt should be properly secured using a child restraint system. Toyota strongly recommends that all infants and children be placed in the rear seats of the vehicle and properly restrained. The rear seats are the safest for infants and children. For instructions concerning the installation of a child restraint system, see “Child restraint” on page 95 in this Section.**

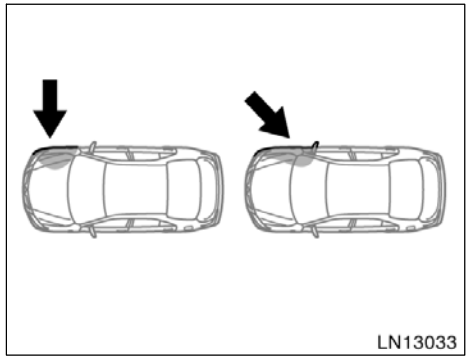

The SRS side airbag and curtain shield airbag system may not activate if the vehicle is subjected to a collision from the side at certain angles, or a collision to the side of the vehicle body other than the passenger compartment as shown in the illustration.

The SRS side airbags and curtain shield airbags are designed to inflate when the passenger compartment area suffers a severe impact from the side.

Always wear your seat belts properly.

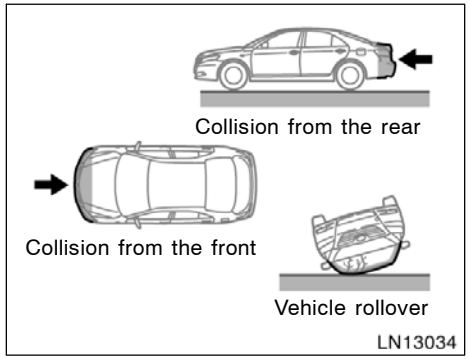

The SRS side airbags and curtain shield airbags are not generally designed to inflate if the vehicle is involved in a front or rear collision, if it rolls over, or if it is involved in a low–speed side collision.

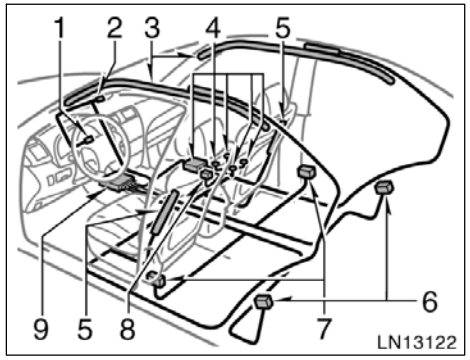

The SRS side airbag and curtain shield airbag system consists mainly of the following components, and their locations are shown in the illustration.

1. SRS warning light
2. “AIRBAG ON” and “AIRBAG OFF” indicator lights (for front passenger airbag and side airbag on the front passenger seat)
3. Curtain shield airbag modules (airbag and inflator)
4. Front passenger occupant classification system (ECU and sensors)
5. Side airbag modules (airbag and inflator)
6. Curtain shield airbag sensors
7. Side and curtain shield airbag sensors
8. Front passenger’s seat belt buckle switch
9. Airbag sensor assembly

The SRS side airbag and curtain shield airbag system is controlled by the airbag sensor assembly. The airbag sensor assembly consists of a safing sensor and airbag sensor.

In a severe side impact, the side and curtain shield airbag sensor and/or the curtain shield airbag sensor trigger(s) the side airbag inflators and/or the curtain shield airbag inflators. At this time a chemical reaction in the inflators quickly fills the airbags with non–toxic gas to help restrain the lateral motion of the occupants.

When the airbags inflate, they produce a fairly loud noise and release some smoke and residue along with non–toxic gas. This does not indicate a fire. This smoke may remain inside the vehicle for some time, and may cause some minor irritation to the eyes, skin or breathing. Be sure to wash off any residue as soon as possible to prevent any potential skin irritation with soap and water. If you can safely exit from the vehicle, you should do so immediately.

Deployment of the airbags happens in a fraction of a second, so the airbags must inflate with considerable force. While the system is designed to reduce serious injuries, it may also cause minor burns or abrasions and swelling.

Front seats as well as parts of the front and rear pillars, and roof side rail may be hot for several minutes, but the airbags themselves will not be hot. The airbags are designed to inflate only once.

⚠ CAUTION

SRS side airbags and curtain shield airbags inflate with considerable force. To reduce the possibility of death or serious injury when they inflate, the driver, front passenger and rear outside passengers must:

- **Wear their seat belts properly.**
- **Remain properly seated with their backs upright and against the seats at all times.**

- **Do not allow anyone to lean against the door when the vehicle is in use, since the side airbag and curtain shield airbag could inflate with considerable speed and force. Otherwise, he/she may be killed or seriously injured. Special care should be taken especially when you have a small child in the vehicle.**
- **Sit up straight and well back in the seat, distributing your weight evenly in the seat. Do not apply excessive weight to the outer side of the seats with a side airbag and to the front pillar, rear pillar and roof side rail with a curtain shield airbag.**

- **Do not allow anyone to get his/her head close to the area where the side airbag and curtain shield airbag inflate, since these airbags could inflate with considerable speed and force. Otherwise, he/she may be killed or seriously injured. Special care should be taken especially when you have a small child in the vehicle.**

- **Do not allow anyone to kneel on the passenger seat, facing the passenger’s side door, since the side airbag and curtain shield airbag could inflate with considerable speed and force. Otherwise, he/she may be killed or seriously injured. Special care should be taken especially when you have a small child in the vehicle.**

- **Do not allow anyone to get his/her head or hands out of windows, since the curtain shield airbags could inflate with considerable speed and force. Otherwise, he/she may be killed or seriously injured. Special care should be taken especially when you have a small child in the vehicle.**

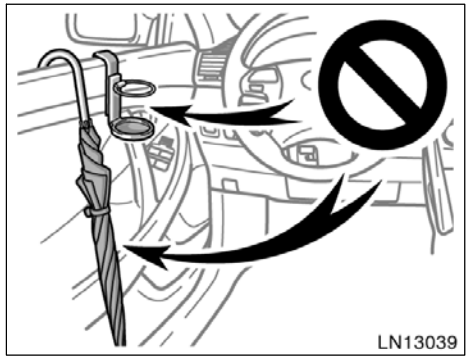

- **Do not attach a cup holder or any other device or object on or around the door. When the side airbag inflates, the cup holder or any other device or object will be thrown with great force, or the side airbag may not activate correctly, resulting in death or serious injury. Likewise, the driver and front passenger should not hold objects in their arms or on their knees.**

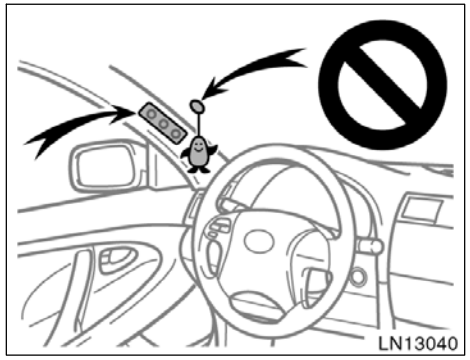

- **Do not attach a microphone or any other device or object around the area where the curtain shield airbag activates such as on the windshield glass, side door glass, front and rear pillars, roof side rail and assist grips. When the curtain shield airbag inflates, the microphone or other device or object will be thrown away with great force or the curtain shield airbag may not activate correctly, resulting in death or serious injury.**

- **Do not hook a hanger, heavy or sharp pointed objects on the coat hook. If the curtain shield airbag inflates, those items will be thrown away with great force or the curtain shield airbag may not activate correctly, resulting in death or serious injury. When you hang clothes, hang them on the coat hook directly.**
- **Do not use seat accessories which cover the parts where the side airbags inflate. Such accessories may prevent the side airbags from activating correctly, causing death or serious injury.**
- **Do not modify or replace the seats or upholstery of the seats with side airbags. Such changes may prevent the side airbag system from activating correctly, disable the system or cause the side airbags to inflate accidentally, resulting in death or serious injury.**

- **Do not disassemble or repair the front and rear pillars and roof side rails containing the curtain shield airbags. Such changes may disable the system or cause the curtain shield airbags to inflate accidentally, resulting in death or serious injury.**

Failure to follow these instructions can result in death or serious injury. Consult your Toyota dealer about any repair and modification.

If you wish to modify your vehicle for a person with a physical disability, consult your Toyota dealer. It may dangerously interfere with the SRS side airbags and curtain shield airbags operation.

NOTICE

Do not perform any of the following changes without consulting your Toyota dealer. Such changes can interfere with proper operation of the SRS side airbag and curtain shield airbag system in some cases.

- ***Installation of electronic devices such as a mobile two-way radio, cassette tape player or compact disc player***
- ***Modification of the suspension system***
- ***Modification of the side structure of the passenger compartment***
- ***Repairs made on or near the console or front seat***

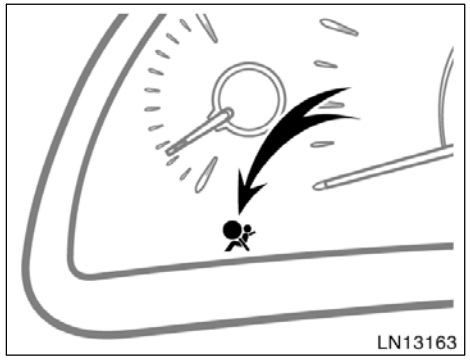

This indicator comes on when the ignition switch is set at ON. It goes off after about 6 seconds. This means the SRS side airbags and curtain shield airbags are operating properly.

This warning light system monitors the airbag sensor assembly, front airbag sensors, side and curtain shield airbag sensors, curtain shield airbag sensors, driver’s seat position sensor, driver’s seat belt buckle switch, front passenger occupant classification system, “AIRBAG ON” indicator light, “AIRBAG OFF” indicator light, front passenger’s seat belt buckle switch, seat belt pretensioner assemblies, inflators, interconnecting wiring and power sources. (For details, see “Service reminder indicators and warning buzzers” on page 146 in Section 1–6.)

If any of the following conditions occurs, this indicates a malfunction of the airbags or seat belt pretensioners. Contact your Toyota dealer as soon as possible.

- The light does not come on when the ignition switch is set at ON or remains on for more than about 6 seconds.
- The light comes on or starts flashing while driving.

The SRS warning light and “AIRBAG OFF” indicator light will come on if there is a malfunction in the front passenger occupant classification system.

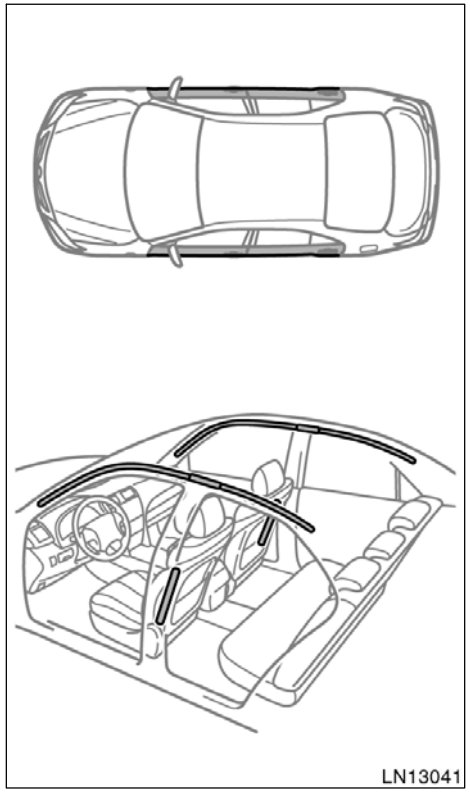

In the following cases, contact your Toyota dealer as soon as possible:

- Any of the SRS side airbags and curtain shield airbags have been inflated.
- The portion of the doors (shaded in the illustration) was involved in an accident that was not severe enough to cause the SRS side airbags and curtain shield airbags to inflate.
- The surface of the seats with the side airbag (shaded in the illustration) is scratched, cracked, or otherwise damaged.
- The portion of the front pillars, rear pillars or roof side rail garnishes (padding) containing the curtain shield airbags inside (shaded in the illustration) is scratched, cracked, or otherwise damaged.

NOTICE

Do not disconnect the battery cables before contacting your Toyota dealer.

—Front passenger occupant classification system

Your vehicle is equipped with a front passenger occupant classification system. This system detects the conditions 1—4 in the table on page 93 and based on these conditions activates or deactivates the following systems;

- Front passenger airbag
- Side airbag on the front passenger seat
- Front passenger’s seat belt pretensioner

The system monitors the weight and load on the front passenger seat, and the seat belt buckle switch to determine conditions 1—4.

In order for the system to detect the conditions correctly, do not do any of the following:

- Apply a heavy load to the front passenger seat or equipment (e.g. seatback pocket).
- Attach a commercial seatback table, etc. to the front passenger seat seatback.
- Put weight on the front passenger seat by putting your hands or feet on the seatback from the rear passenger seat.

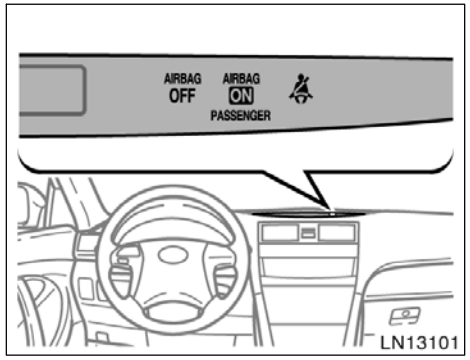

The “AIRBAG ON” and “AIRBAG OFF” indicator lights indicate the actuation of the front passenger airbag, side airbag on the front passenger seat and front passenger’s seat belt pretensioner.

The “AIRBAG OFF” indicator light will be illuminated when the ignition switch is set at ON with the condition 2 in the table shown below.

If the front passenger occupant classification system determines that a person of adult size sits in the front passenger seat but the “AIRBAG OFF” indicator light is illuminated, one of the following is likely to have occurred:

- A rear passenger lifts the front passenger seat cushion with their legs.
- Objects are placed under the front passenger seat.
- The front passenger seatback is in contact with the rear seat.

To ensure the system correctly detects an adult sitting in the front passenger seat, make sure the above do not occur.

Make sure that the “AIRBAG ON” indicator light is illuminated when an adult is seated in the front passenger seat. If the “AIRBAG OFF” indicator light is illuminated, ask the passenger to sit up straight, well back in the seat, and with the seat belt worn correctly. If the “AIRBAG OFF” indicator light still remains illuminated, either ask the passenger to move to the rear seat, or if that is not possible, move the front passenger seat fully rearward.

The “AIRBAG ON” and “AIRBAG OFF” indicator lights will be illuminated initially when the ignition switch is set at ON. After about four seconds, they will go off. After that, the front passenger occupant classification system operates and judges which indicator light be illuminated.

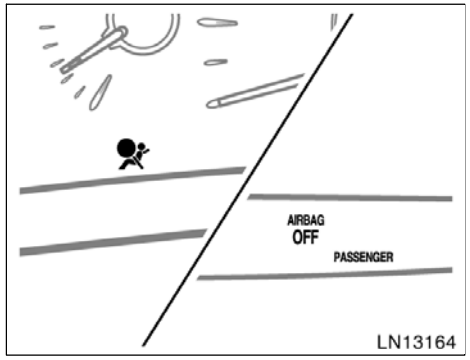

The SRS warning and “AIRBAG OFF” indicator lights will come on if there is a malfunction in the front passenger occupant classification system.

Condition and operation in the front passenger occupant classification system

Condition detected by the front passenger occupant classification system	Indicator/warning light			Devices			
	“AIRBAG ON” and “AIRBAG OFF” indicator lights	SRS warning light	Front passenger’s seat belt reminder light	Front passenger airbag	Side airbag on the front passenger seat	Curtain shield airbag in the front passenger side	Front passenger’s seat belt pretensioner
1. Adult*1	“AIRBAG ON”	Off	Flashing*4	Activated			
2. Child*2 or child restraint system*3	“AIRBAG OFF”	Off	Flashing*4	Deactivated		Activated	Activated
3. Unoccupied	Not illuminated	Off	Off	Deactivated			Deactivated
4. There is a malfunction in the system	“AIRBAG OFF”	On	Off	Deactivated			Activated

*1: The system judges a person of adult size as an adult. When a smaller adult sits in the front passenger seat, the system may recognize him/her as a child depending on his/her physique and posture.
*2: When a larger child who has outgrown a child restraint system sits in the front passenger seat, the system may recognize him/her as an adult depending on his/her physique or posture.
*3: Never install a rear–facing child restraint system on the front passenger seat. A forward–facing child restraint system should only be installed on the front passenger seat when it is unavoidable. (See “Child restraint” on page 95 in this Section as for installing the child restraint system.)
*4: In the event that the front passenger does not wear a seat belt.

⚠ CAUTION

To avoid potential death or serious injury when the front passenger occupant classification system does not detect the conditions correctly, observe the following.

- **Do not recline the front passenger seat seatback so that it interferes with a rear seat as it may cause the “AIRBAG OFF” indicator light be illuminated. If the seatback interferes with the rear seat, return the seatback to a position where it does not interfere with the rear seat.**

  Keep the front passenger seatback as upright as possible when the vehicle is moving. Reclining the seatback excessively may lessen the effectiveness of the seat belt system.

- **Make sure the “AIRBAG ON” indicator light is illuminated when using the seat belt extender for the front passenger seat. If the “AIRBAG OFF” indicator light is illuminated, disconnect the extender tongue from the seat belt buckle, then reconnect the seat belt. Reconnect the seat belt extender after making sure the “AIRBAG ON” indicator light is illuminated. If you use the seat belt extender while the “AIRBAG OFF” indicator light is illuminated, the front passenger airbag and side airbag on the front passenger side may not activate correctly, which could cause death or serious injury in the event of collision.**

- **If an adult sits in the front passenger seat, the “AIRBAG ON” indicator light should be illuminated. If the “AIRBAG OFF” indicator light is illuminated, ask the passenger to sit up straight, well back in the seat, feet on the floor, and with the seat belt worn correctly. If the “AIRBAG OFF” indicator light still remains illuminated, either ask the passenger to move to the rear seat, or if that is not possible, move the front passenger seat fully rearward.**
- **Wear the seat belt properly.**
- **Make sure the front passenger’s seat belt tab has not been left inserted into the buckle before someone sits in the front passenger seat.**
- **Do not apply a heavy load to the front passenger seat or equipment (e.g. seatback pocket).**

- **Do not put weight on the front passenger seat by putting your hands or feet on the front passenger seat seatback from the rear passenger seat.**
- **Do not let a rear passenger lift the front passenger seat with their feet or press on the seatback with their legs.**
- **Do not put objects under the front passenger seat.**
- **Child restraint systems installed on the rear seat should not contact the front seatbacks.**
- **When it is unavoidable to install the forward–facing child restraint system on the front passenger seat, install the child restraint system on the front passenger seat in the proper order. (As for the installation order, see “—Child restraint system” on page 97 in this Section.)**

- **Do not remove the seat.**
- **Do not kick the front passenger seat or subject it to severe impact. Otherwise, the SRS warning light may come on to indicate a malfunction of the detection system. In this case, contact your Toyota dealer immediately.**

The “AIRBAG ON” indicator light may be illuminated (the front passenger airbag and side airbag on the front passenger seat may deploy) even if observing the above cautions, when a child sits in, or a forward–facing child restraint system is installed on the front passenger seat. Refer to all the cautions in “SRS airbags” on page 76 and “Child restraint” on page 95 in this Section.

Child restraint—
—Child restraint precautions

Toyota strongly urges the use of appropriate child restraint systems for children.

The laws of all 50 states in the U.S.A. and Canada now require the use of a child restraint system.

Your vehicle conforms to SAEJ1819.

If a child is too large for a child restraint system, the child should sit in the rear seat and must be restrained using the vehicle’s seat belt. See “Seat belts” on page 65 in this Section for details.

⚠ CAUTION

- **For effective protection in automobile accidents and sudden stops, a child must be properly restrained, using a seat belt or child restraint system depending on age and size of the child. Holding a child in your arms is not a substitute for a child restraint system. In an accident, the child can be crushed against the windshield, or between you and the vehicle’s interior.**

- Toyota strongly urges use of a proper child restraint system which conforms to the size of the child, installed on the rear seat. According to accident statistics, the child is safer when properly restrained in the rear seat than in the front seat.
- Never install a rear–facing child restraint system on the front passenger seat even if the “AIRBAG OFF” indicator light is illuminated. In the event of an accident, the force of the rapid inflation of the front passenger airbag can cause death or serious injury to the child if the rear–facing child restraint system is installed on the front passenger seat.

- A forward–facing child restraint system should be allowed to be installed on the front passenger seat only when it is unavoidable. Always move the seat as far back as possible even if the “AIRBAG OFF” indicator light is illuminated, because the front passenger airbag could inflate with considerable speed and force. Otherwise, the child may be killed or seriously injured.
- On vehicles with side airbags and curtain shield airbags, do not allow the child to lean his/her head or any part of his/her body against the door or the area of the seat, front or rear pillar or roof side rail from which the side airbags or curtain shield airbags deploy even if the child is seated in the child restraint system. It is dangerous if the side airbags and/or curtain shield airbags inflate, and the impact could cause death or serious injury to the child.

- Do not use the seat belt extender when installing a child restraint system on the front or rear passenger seat. If installing a child restraint system with the seat belt extender connected to the seat belt, the seat belt will not securely hold the child restraint system, which could cause death or serious injury to the child or other passengers in the event of collision.
- Make sure you have complied with all installation instructions provided by the child restraint manufacturer and that the system is properly secured. If it is not secured properly, it may cause death or serious injury to the child in the event of a sudden stop or accident.

—Child restraint system

A child restraint system for a small child or baby must itself be properly restrained on the seat with the lap portion of the lap/shoulder belt. You must carefully consult the manufacturer’s instructions which accompany the child restraint system.

To provide proper restraint, use a child restraint system following the manufacturer’s instructions about the appropriate age and size of the child for the child restraint system.

Install the child restraint system correctly following the instructions provided by its manufacturer. General directions are also provided under the following illustrations.

The child restraint system should be installed on the rear seat. According to accident statistics, the child is safer when properly restrained in the rear seat than in the front seat.

When not using the child restraint system, keep it secured with the seat belt or place it in the trunk or somewhere other than the passenger compartment. This will prevent it from injuring passengers in the event of a sudden stop or accident.

—Types of child restraint system

Child restraint systems are classified into the following 3 types depending on the child’s age and size.

(A) Infant seat
(B) Convertible seat
(C) Booster seat

Install the child restraint system following the instructions provided by its manufacturer.

Your vehicle has anchor brackets for securing the top strap of a child restraint system.

For instructions about how to use the anchor bracket, see “—Using a top strap” on page 109 in this Section.

The child restraint lower anchorages approved for your vehicle may also be used. See “—Installation with child restraint lower anchorages” on page 111 in this Section.

(A) Infant seat

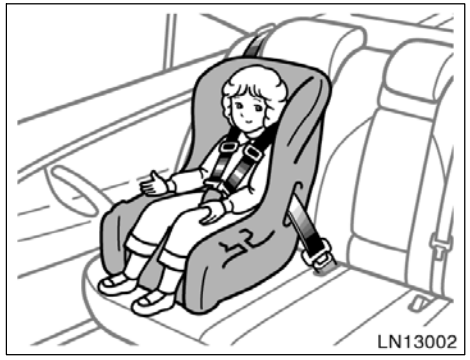

(B) Convertible seat

—Installation with seat belt

(C) Booster seat

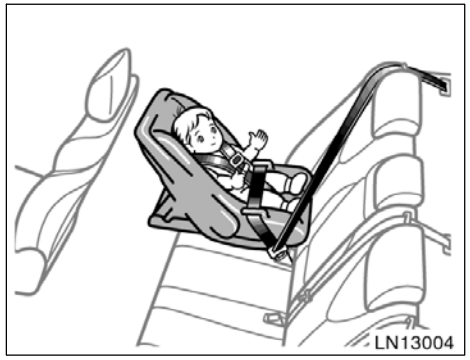

(A) INFANT SEAT INSTALLATION

An infant seat must be used in rear–facing position only.

CAUTION

- Never install a rear–facing child restraint system on the front passenger seat even if the “AIRBAG OFF” indicator light is illuminated. In the event of an accident, the impact of the rapid inflation of the front passenger airbag could cause death or serious injury to the child if the rear–facing child restraint system is installed on the front passenger seat.

- **Do not install a child restraint system on the rear seat if it interferes with the lock mechanism of the front seats. Otherwise, the child or front seat occupant(s) may be killed or seriously injured in case of sudden braking or a collision.**
- **If the driver’s seat position does not allow sufficient space for safe installation, install the child restraint system on the rear right seat.**

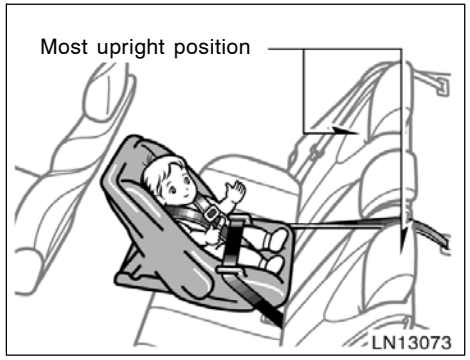

- **Vehicles with reclining type rear seat—When installing a child restraint system in the rear center position, adjust both seatbacks to the most upright position. Otherwise, the child restraint system cannot be securely restrained and this may cause death or serious injuries in a collision.**

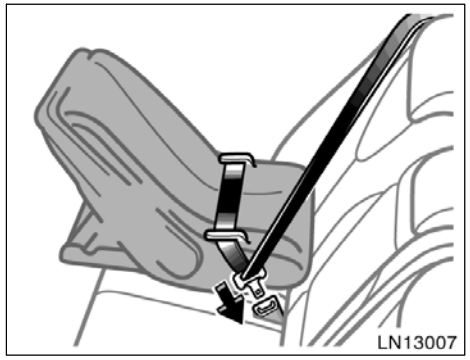

1. Run the lap and shoulder belt through or around the infant seat following the instructions provided by its manufacturer and insert the tab into the buckle taking care not to twist the belt. Keep the lap portion of the belt tight.

⚠ CAUTION

- **After inserting the tab, make sure the tab and buckle are locked and that the lap and shoulder portions of the belt are not twisted.**
- **Do not insert coins, clips, etc. in the buckle as this may prevent your child from properly latching the tab and buckle.**
- **If the seat belt does not function normally, it cannot protect your child from death or serious injury. Contact your Toyota dealer immediately. Do not install the child restraint system on the seat until the seat belt is fixed.**

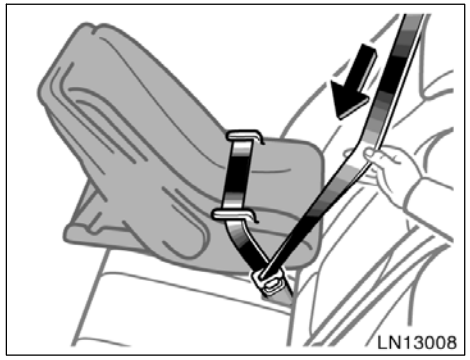

2. Fully extend the shoulder belt to put it in the lock mode. When the belt is then retracted even slightly, it cannot be extended.

To hold the infant seat securely, make sure the belt is in the lock mode before letting the belt retract.

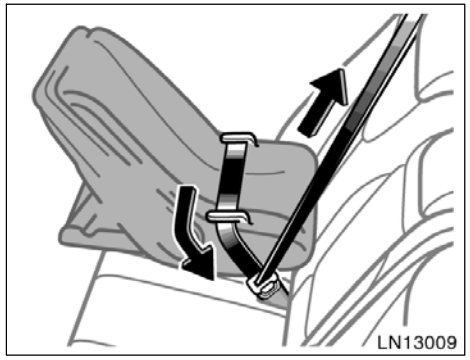

3. While pressing the infant seat firmly against the seat cushion and seatback, let the shoulder belt retract as far as it will go to hold the infant seat securely.

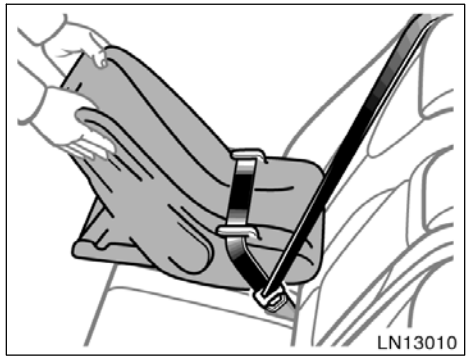

⚠ CAUTION

Push and pull the child restraint system in different directions to be sure it is secure. Follow all the installation instructions provided by its manufacturer.

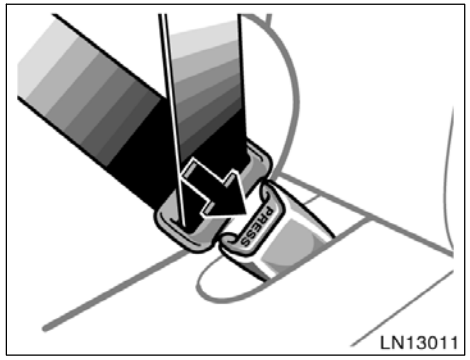

4. To remove the infant seat, press the buckle release button and allow the belt to retract completely. The belt will move freely again and be ready to work for an adult or older child passenger.

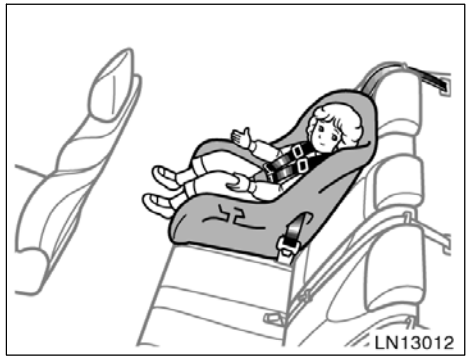

(B) CONVERTIBLE SEAT INSTALLATION

A convertible seat must be used in forward–facing or rear–facing position depending on the age and size of the child. When installing, follow the manufacturer’s instructions about the appropriate age and size of the child as well as directions for installing the child restraint system.

Install the child restraint system on the front passenger seat only when it is unavoidable. Your vehicle is equipped with a front passenger occupant classification system. In order to activate the occupant classification system correctly, install the forward–facing child restraint system on the front passenger seat in the following order:

1. Set the ignition switch to ON.
2. Move the front passenger seat to the rearward position.
3. Put the child restraint system on the front passenger seat without putting your weight on the front passenger seat.
4. Insert the seat belt tab into the seat belt buckle.
5. Fully extend the shoulder belt to put it in the lock mode. When the belt is then retracted even slightly, it cannot be extended. To hold the seat securely, make sure the belt is in the lock mode before letting the belt retract.
6. While pressing the convertible seat firmly against the seat cushion and seatback, let the shoulder belt retract as far as it will go to hold the convertible seat securely.

⚠ CAUTION

Push and pull the child restraint system in different directions to be sure it is secure. Follow all the installation instructions provided by its manufacturer.

7. Put a child on the child restraint system and secure the child, complying with the instructions provided by the child restraint system manufacturer.

The “AIRBAG OFF” indicator light should be illuminated when the ignition switch is set at ON and the child is in the child restraint system after following these procedures. The “AIRBAG OFF” indicator light indicates the SRS front passenger airbag and side airbag on the passenger side will not deploy. If the “AIRBAG ON” indicator light is illuminated, remove the child restraint system and reinstall it with the engine off. If the “AIRBAG ON” indicator light is illuminated when the ignition switch is set at ON, then the SRS front passenger airbag and side airbag on the passenger side may deploy in an accident. Do not drive the vehicle in this condition. Remove the child restraint system and contact your Toyota dealer.

⚠ CAUTION

- **Never install a rear–facing child restraint system on the front passenger seat. A forward–facing child restraint system should only be installed on the front passenger seat when unavoidable. If you must install the child restraint system on the front passenger seat, put the seat in its most rearward position, and install the forward–facing child restraint system in the proper order. Otherwise, the front passenger occupant classification system can not detect the presence of the child restraint system and the front passenger airbag and side airbag on the front passenger seat could deploy, and the impact could cause death or serious injury to the child.**

- **Never install a rear–facing child restraint system on the front passenger seat even if the “AIRBAG OFF” indicator light is illuminated. In the event of an accident, the impact of the rapid inflation of the front passenger airbag could cause death or serious injury to the child if the rear–facing child restraint system is installed on the front passenger seat.**

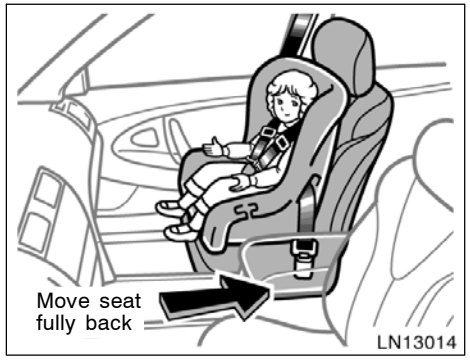

- **A forward–facing child restraint system should be allowed to be installed on the front passenger seat only when it is unavoidable. Always move the seat as far back as possible even if the “AIRBAG OFF” indicator light is illuminated, because the front passenger airbag could inflate with considerable speed and force. Otherwise, the child may be killed or seriously injured.**

- **On vehicles with side airbags and curtain shield airbags, do not allow the child to lean his/her head or any part of his/her body against the door or the area of the seat, front or rear pillar or roof side rail from which the side airbags or curtain shield airbags deploy even if the child is seated in the child restraint system. It is dangerous if the side airbag and/or curtain shield airbag inflate, and the impact could cause death or serious injury to the child.**

- **Do not install a child restraint system on the rear seat if it interferes with the lock mechanism of the front seats. Otherwise, the child or front seat occupant(s) may be killed or seriously injured in case of sudden braking or a collision.**
- **If the driver’s seat position does not allow sufficient space for safe installation, install the child restraint system on the rear right seat.**

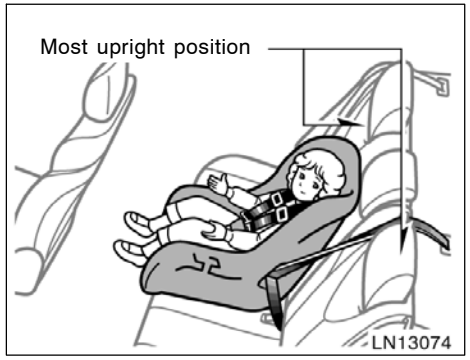

- **Vehicles with reclining type rear seat—When installing a child restraint system in the rear center position, adjust both seatbacks to the most upright position. Otherwise, the child restraint system cannot be securely restrained and this may cause death or serious injuries in a collision.**

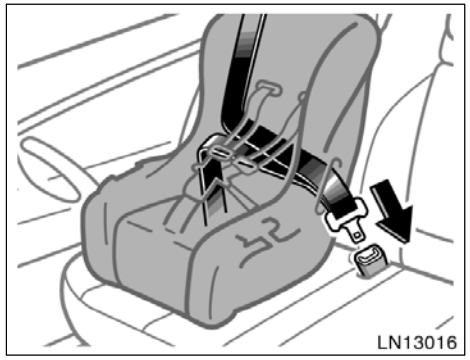

1. Run the lap and shoulder belt through or around the convertible seat following the instructions provided by its manufacturer and insert the tab into the buckle taking care not to twist the belt. Keep the lap portion of the belt tight.

⚠ CAUTION

- **After inserting the tab, make sure the tab and buckle are locked and that the lap and shoulder portions of the belt are not twisted.**
- **Do not insert coins, clips, etc. in the buckle as this may prevent your child from properly latching the tab and buckle.**
- **If the seat belt does not function normally, it cannot protect your child from death or serious injury. Contact your Toyota dealer immediately. Do not install the child restraint system on the seat until the seat belt is fixed.**

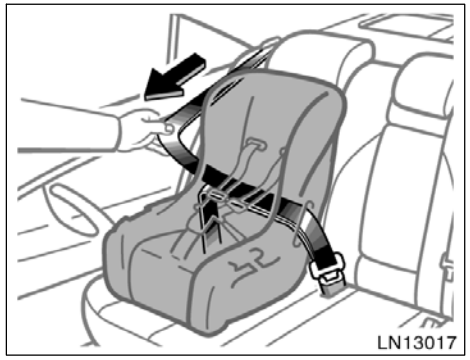

2. Fully extend the shoulder belt to put it in the lock mode. When the belt is then retracted even slightly, it cannot be extended.

To hold the convertible seat securely, make sure the belt is in the lock mode before letting the belt retract.

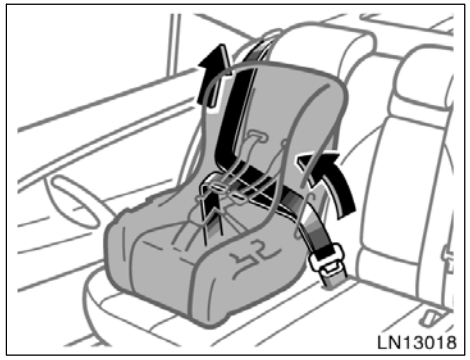

3. While pressing the convertible seat firmly against the seat cushion and seatback, let the shoulder belt retract as far as it will go to hold the convertible seat securely.

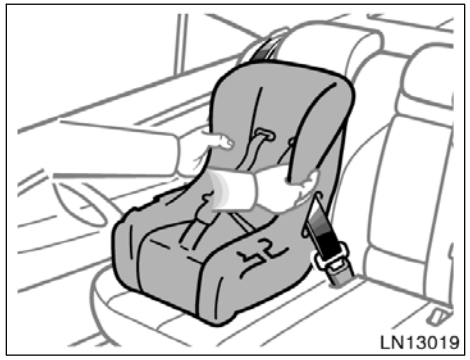

⚠ CAUTION

Push and pull the child restraint system in different directions to be sure it is secure. Follow all the installation instructions provided by its manufacturer.

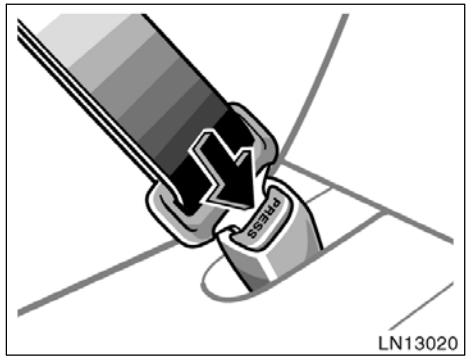

4. To remove the convertible seat, press the buckle release button and allow the belt to retract completely. The belt will move freely again and be ready to work for an adult or older child passenger.

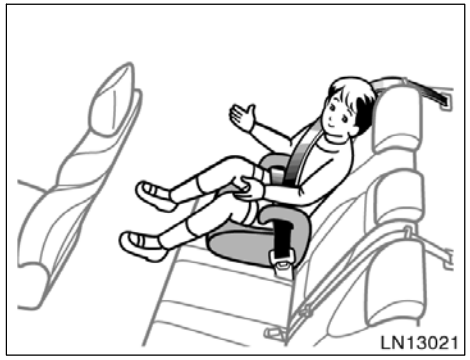

(C) BOOSTER SEAT INSTALLATION

A booster seat must be used in forward–facing position only.

CAUTION

- **A forward–facing child restraint system should be allowed to be installed on the front passenger seat only when it is unavoidable. Always move the seat as far back as possible even if the “AIRBAG OFF” indicator light is illuminated, because the front passenger airbag could inflate with considerable speed and force. Otherwise, the child may be killed or seriously injured.**

- **On vehicles with side airbags and curtain shield airbags, do not allow the child to lean his/her head or any part of his/her body against the door or the area of the seat, front or rear pillar or roof side rail from which the side airbags or curtain shield airbags deploy even if the child is seated in a child restraint system. It is dangerous if the side airbag and/or curtain shield airbag inflate, and the impact could cause death or serious injury to the child.**

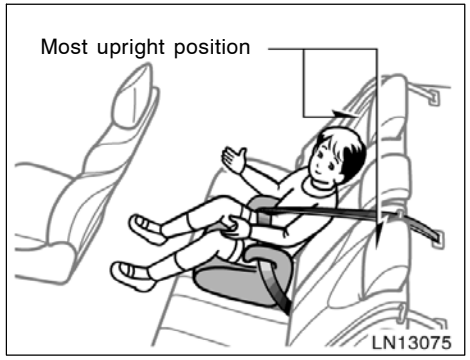

- **Vehicles with reclining type rear seat—When installing a child restraint system in the rear center position, adjust both seatbacks to the most upright position. Otherwise, the child restraint system cannot be securely restrained and this may cause death or serious injuries in a collision.**

1. Sit the child on a booster seat. Run the lap and shoulder belt through or around the booster seat and across the child following the instructions provided by its manufacturer and insert the tab into the buckle taking care not to twist the belt.

Make sure the shoulder belt is correctly across the child’s shoulder and that the lap belt is positioned as low as possible on the child’s hips. See “Seat belts” on page 65 in this Section for details.

⚠ CAUTION

- **Always make sure the shoulder belt is positioned across the center of child’s shoulder. The belt should be kept away from child’s neck, but not falling off child’s shoulder. Otherwise, the child may be killed or seriously injured in case of sudden braking or a collision.**
- **Both high-positioned lap belts and loose-fitting belts could cause death or serious injuries due to sliding under the lap belt during a collision or other unintended event. Keep the lap belt positioned as low on a child’s hips as possible.**
- **For child’s safety, do not place the shoulder belt under child’s arm.**
- **After inserting the tab, make sure the tab and buckle are locked and that the lap and shoulder portions of the belt are not twisted.**
- **Do not insert coins, clips, etc. in the buckle as this may prevent your child from properly latching the tab and buckle.**
- **If the seat belt does not function normally, it cannot protect your child from death or serious injury. Contact your Toyota dealer immediately. Do not install the child restraint system on the seat until the seat belt is fixed.**

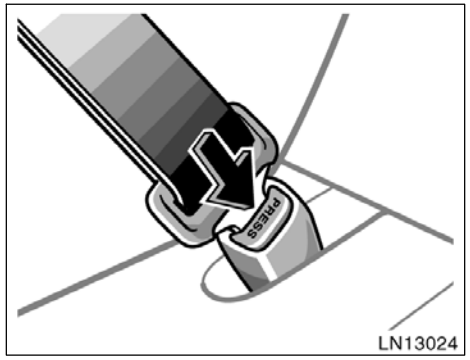

2. To remove the booster seat, press the buckle release button and allow the belt to retract.

—Using a top strap

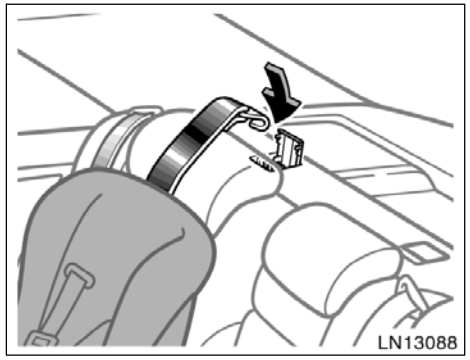

Follow the procedure below for a child restraint system that requires the use of a top strap.

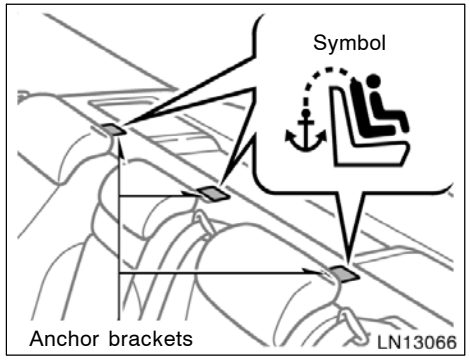

Use the anchor bracket on the package tray behind the rear seat to attach the top strap.

Anchor brackets are installed for each rear seating position.

This symbol indicates the locations of the anchor brackets.

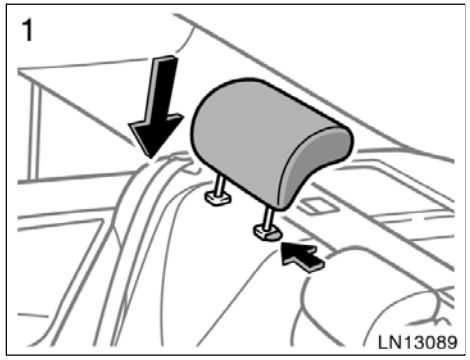

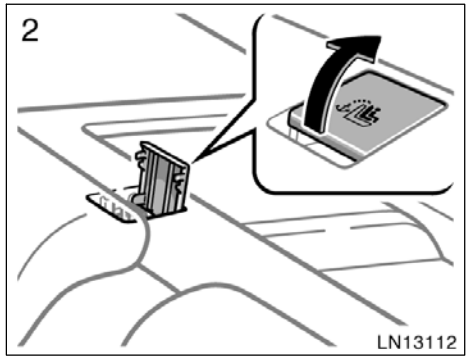

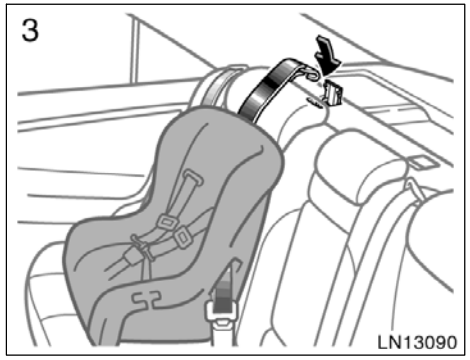

TO USE THE ANCHOR BRACKET:

1. **Lower the head restraint to the lowest position.**
2. **Open the lid of the anchor bracket.**
3. **Fix the child restraint system with the seat belt.**

   Latch the hook onto the anchor bracket and tighten the top strap.

For instructions to install the child restraint system, see “Child restraint” on page 95 in this Section.

⚠ CAUTION

Make sure the top strap is securely latched, and check that the child restraint system is secure by pushing and pulling it in different directions. Follow all the installation instructions provided by its manufacturer.

—Installation with child restraint lower anchorages

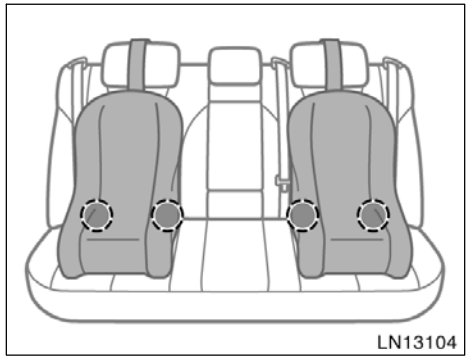

Lower anchorages for the child restraint systems interfaced with the FMVSS225 or CMVSS210.2 specifications are installed in the rear seat.

The anchorages are installed in the clearance between the seat cushion and seatback of both outside rear seats.

Child restraint systems interfaced with the FMVSS213 or CMVSS213 specification can be fixed with these anchorages. In this case, it is not necessary to fix the child restraint system with a seat belt on the vehicle.

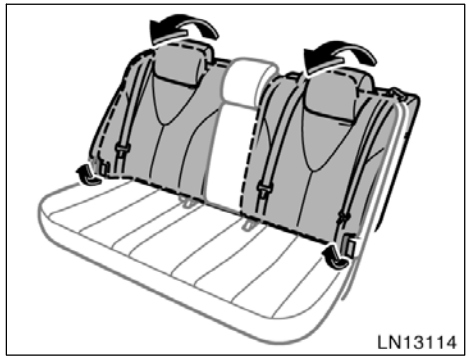

CHILD RESTRAINT SYSTEM INSTALLATION

1. **Vehicles with reclining type rear seat—Adjust the seatback to the most upright position.**

Make sure the seatback is locked securely.

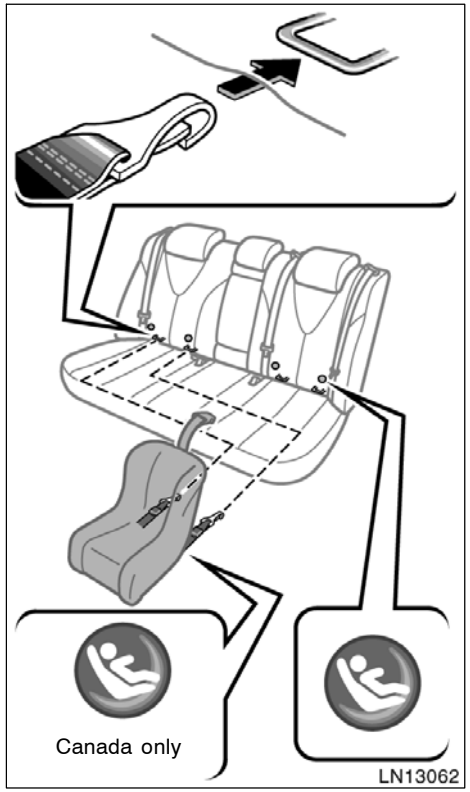

Type A

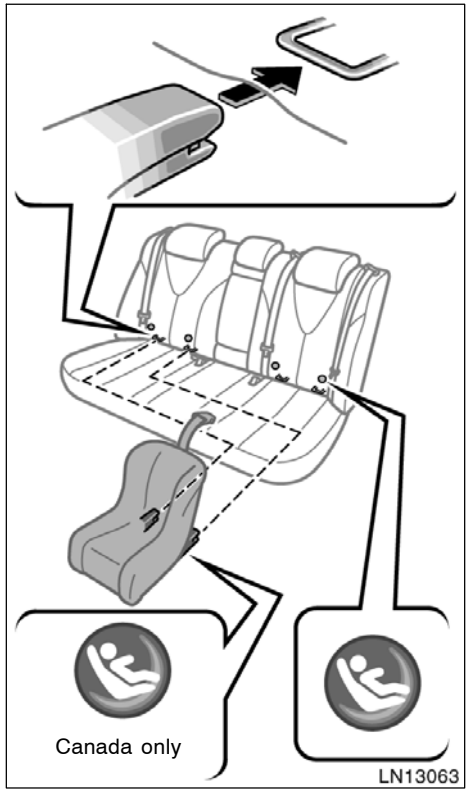

Type B

2. **Widen the gap between the seat cushion and seatback slightly and confirm the position of the lower anchorages near the button on the seatback.**
3. **Type A—Latch the hooks of lower straps onto the anchorages and tighten the lower straps.**

   Type B—Latch the buckles onto the anchorages.

For owners in Canada—The symbol on a child restraint system indicates the presence of a lower connector system.

If your child restraint system has a top strap, it should be anchored. (For the installation of the top strap, see “—Using a top strap” on page 109 in this Section.)

For installation details, refer to the instruction manual equipped with each product.

⚠ CAUTION

- **When using the lower anchorages for the child restraint system, be sure that there are no irregular objects around the anchorages or that the seat belt is not caught.**
- **Push and pull the child restraint system in different directions to be sure it is secure. Follow all the installation instructions provided by its manufacturer.**
- **Do not install a child restraint system on the rear seat if it interferes with the lock mechanism of the front seats. Otherwise, the child or front seat occupant(s) may be killed or seriously injured in case of sudden braking or a collision.**

SECTION 1 – 4

OPERATION OF INSTRUMENTS AND CONTROLS

Steering wheel and Mirrors

Tilt and telescopic steering wheel 114
Outside rear view mirrors 114
Anti–glare inside rear view mirror 116
Auto anti–glare inside rear view mirror 116
Vanity mirrors 117

Tilt and telescopic steering wheel

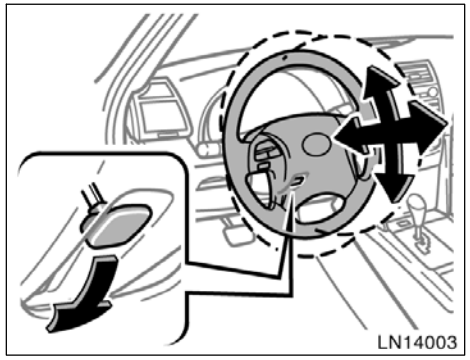

To adjust the steering wheel position, hold the steering wheel, push down the lock release lever. Then tilt the steering wheel to the desired angle, push or pull it to the desired steering column length and return the lever to its original position.

⚠ CAUTION

- **Do not adjust the steering wheel while the vehicle is moving. Doing so may cause the driver to mishandle the vehicle and an accident may occur resulting in death or serious injuries.**
- **After adjusting the steering wheel, try moving it up and down or forward and rearward to make sure it is locked in position.**

Outside rear view mirrors—

Adjust the mirror so that you can just see the side of your vehicle in the mirror.

Be careful when judging the size or distance of any object seen in the outside rear view mirror on the passenger’s side because it is a convex mirror. Any object seen in a convex mirror will look smaller and farther away than when seen in a flat mirror.

On some models, when you push the rear window defogger switch, the heater panels in the outside rear view mirrors will quickly clear the mirror surface. (See “Rear window and outside rear view mirror defoggers” on page 129 in Section 1–5.)

CAUTION

- **Do not adjust the mirror while the vehicle is moving. Doing so may cause the driver to mishandle the vehicle and an accident may occur resulting in death or serious injuries.**
- **Since the mirror surfaces can get hot, do not touch them when the defogger switch is on.**

NOTICE

The outside rear view mirrors are fixed in place. Do not try to fold the mirrors. It may damage the mirrors.

—Power rear view mirror control

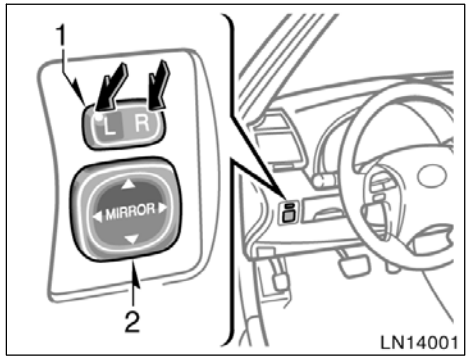

To adjust a mirror, use the switches.

1. Master switch—To select the mirror to be adjusted
   Push the switch to “L” (left) or “R” (right).
2. Control switch—To move the mirror
   Push the switch in the desired direction.

Mirrors can be adjusted when the ignition switch is set at ACC or ON.

NOTICE

If ice should jam the mirror, do not operate the control or scrape the mirror face. Use a spray de-icer to free the mirror.

Anti–glare inside rear view mirror

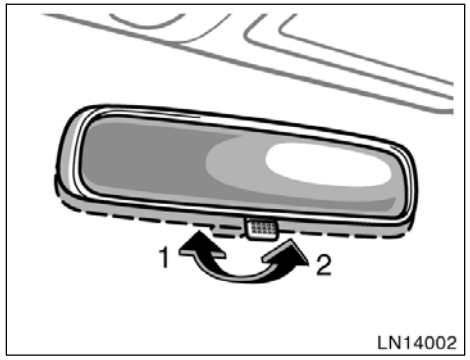

Adjust the mirror so that you can just see the rear of your vehicle in the mirror.

To reduce glare from the headlights of the vehicle behind you during night driving, operate the lever on the lower edge of the mirror.

Daylight driving—Lever at position 1

The reflection in the mirror has greater clarity at this position.

Night driving—Lever at position 2

Remember that by reducing glare you also lose some rear view clarity.

⚠ CAUTION

Do not adjust the mirror while the vehicle is moving. Doing so may cause the driver to mishandle the vehicle and an accident may occur resulting in death or serious injuries.

Auto anti–glare inside rear view mirror

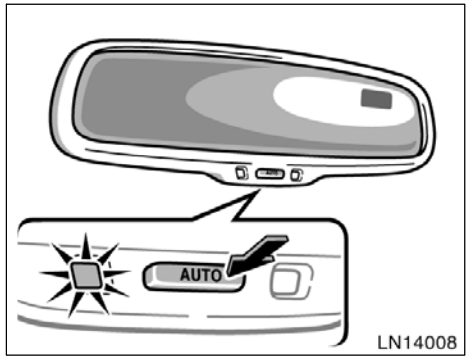

Adjust the mirror so that you can just see the rear of your vehicle in the mirror.

This mirror is equipped with auto anti–glare function. The function is designed to reduce glare from the headlights of the vehicle behind you during night driving.

When the ignition switch is set at ON, the inside rear view mirror always turns on in the automatic function mode.

The indicator illuminates to show you that the function is on.

In automatic function mode, if the mirror detects light from the headlights of the vehicle behind you, the mirror surface darkens slightly to reduce the reflected light.

To turn off and on the automatic function, push the “AUTO” switch.

Adjust it before driving so that the rear view is in the best condition.

When the inside air temperature is low, it may take a little longer for the mirror to darken in response to the detection of headlights.

⚠ CAUTION

Do not adjust the mirror while the vehicle is moving. Doing so may cause the driver to mishandle the vehicle and an accident may occur resulting in death or serious injuries.

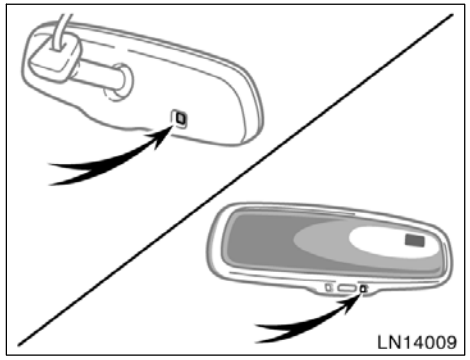

To ensure correct functioning of anti–glare mirror sensors located on both sides of the mirror, do not touch or cover the sensors with your finger or a piece of cloth, etc.

Vanity mirrors

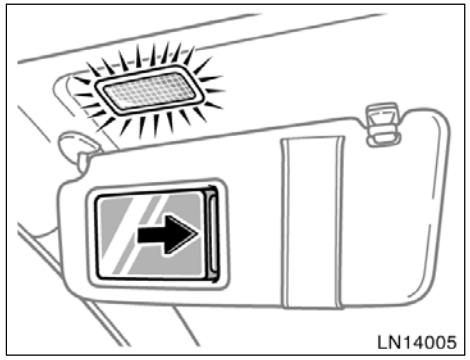

To use the vanity mirror, swing down the sun visor and slide the cover.

On some models—The lights come on when you slide the cover.

SECTION 1 – 5

OPERATION OF INSTRUMENTS AND CONTROLS

Lights, Wipers and Defogger

Headlights and turn signals 120
Emergency flashers 125
Instrument panel light control 126
Front fog lights 126
Interior light 126
Personal lights 127
Illuminated entry system 128
Windshield wipers and washer 128
Rear window and outside rear view mirror defoggers 129

Headlights and turn signals (for the U.S.A.)

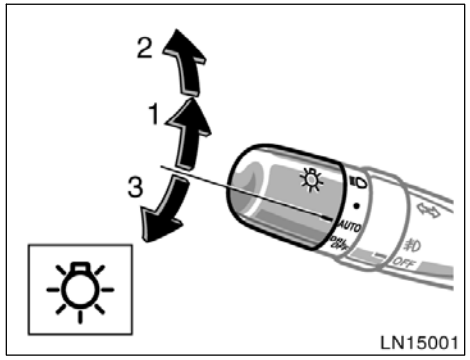

HEADLIGHTS

Manual operation—

To turn on the following lights: Twist the headlight/turn signal lever knob.

Position 1—Parking, tail, license plate, side marker and instrument panel lights

Position 2—Headlights and all of the above

The headlight indicator lights up in the instrument cluster.

When the tail lights/headlights are turned on, the brightness of the instrument cluster will be reduced slightly unless the instrument panel light control knob is turned fully clockwise.

However, the brightness of the instrument cluster will not be reduced in daytime even when the tail lights/headlights are turned on.

Automatic operation—

To turn on or off the lights automatically, twist the headlight/turn signal lever knob to the “AUTO” position when the ignition switch is set at ON.

The headlights and all of the lights in position 1 automatically turn on or off depending on the darkness of the surroundings.

Manually twist the knob to the position 2 to turn on the headlights if they are needed immediately when entering a dark tunnel, parking structure, etc.

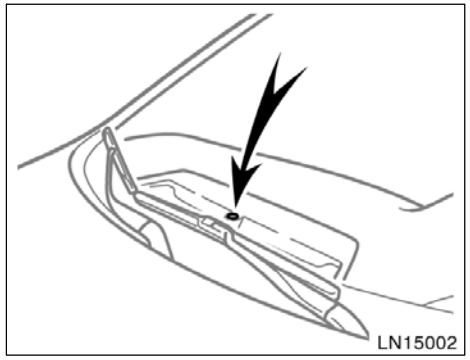

The automatic light control sensor is on the top of the instrument panel.

Do not place anything on the instrument panel, and/or do not affix anything on the windshield to block this sensor.

If you feel that the automatic light control comes into operation too early or too late, have the sensor adjusted by your Toyota dealer.

Automatic light cut off system

Position 1—

The lights automatically turn off when the driver’s door is opened after the ignition switch is set to off.

Position 2 or “AUTO” position with the headlights on—

The lights automatically turn off after 30 seconds when any of the doors or trunk lid is opened and closed after the ignition switch is set to off.

The lights can be turned off immediately by pushing the lock switch on the wireless remote control transmitter with all the doors locked and the trunk lid closed.

The time period before the lights turn off can be changed. For details, ask your Toyota dealer.

If any of the doors or trunk lid is kept open, the lights automatically turn off after 20 minutes.

To turn on the lights again, set the ignition switch at ON or actuate the headlight switch. If you are going to park for over one week, make sure the knob is in the “DRL OFF” position.

NOTICE

To prevent the battery from being discharged, do not leave the lights on for a long period when the engine is not running.

Daytime Running Light (DRL) system

The Daytime Running Light (DRL) system can make it easier for others to see the front of your vehicle during the day. The DRL system can be helpful in many different driving conditions, but they can be especially helpful in the short periods after dawn and before sunset.

The DRL system will make your headlights come on at a reduced brightness when:

- The ignition is on with the engine running.
- The light switch is in the “AUTO” position with the headlights off or position 1.
- The parking brake is released.

To turn on the other exterior lights and instrument panel lights, twist the knob to position 1.

Twist the knob to position 2 to turn the headlights to full intensity for night driving.

To turn off the DRL system, twist the knob to the position 3 (“DRL OFF”) or turn the ignition switch off.

The daytime running light system can be disabled. For details, contact your Toyota dealer.

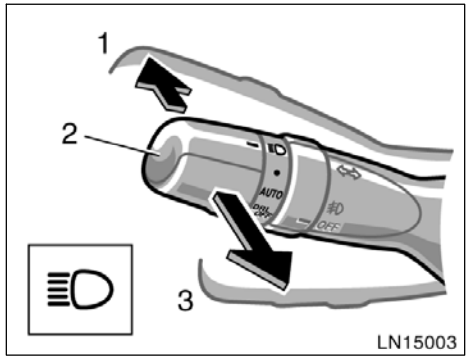

High–Low beams—For high beams, turn the headlights on and push the lever away from you (position 1). Pull the lever toward you (position 2) for low beams.

The headlight high beam indicator light (blue light) on the instrument panel will tell you that the high beams are on.

Flashing the high beam headlights (position 3)—Pull the lever all the way back. The high beam headlights turn off when you release the lever.

You can flash the high beam headlights even when the headlights are off.

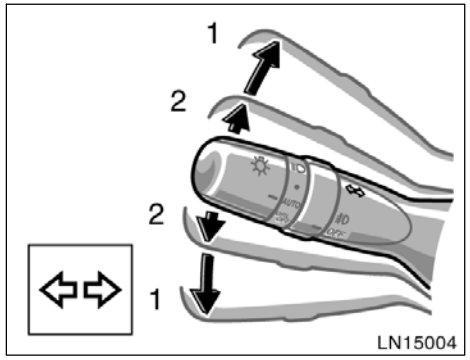

TURN SIGNALS

To signal a turn, push the headlight/turn signal lever up or down to position 1.

The ignition switch must be set at ON.

The lever automatically returns after you make a turn, but you may have to return it by hand after you change lanes.

To signal a lane change, move the lever up or down to the pressure point (position 2) and hold it.

If the turn signal indicator lights (green lights) on the instrument panel flash faster than normal, a front or rear turn signal bulb is burned out. See “Replacing light bulbs” on page 400 in Section 7–3.

Headlights and turn signals (for Canada)

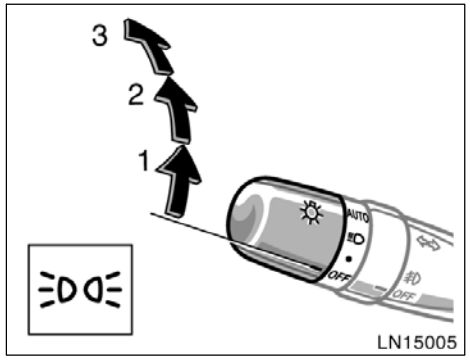

HEADLIGHTS

To turn on the following lights: Twist the headlight/turn signal lever knob.

Position 1—Parking, tail, license plate, side marker and instrument panel lights

The tail light indicator (green light) on the instrument panel will tell you that the tail lights are on.

Position 2—Headlights and all of the above

Position 3 (“AUTO”)—Headlights and all of the lights in the position 1

They automatically turn on or off depending on the darkness of the surroundings.

Manually twist the knob to the position 2 to turn on the headlights if they are needed immediately when entering a dark tunnel, parking structure, etc.

When the tail lights/headlights are turned on, the brightness of the instrument cluster will be reduced slightly unless the instrument panel light control knob is turned fully clockwise.

However, the brightness of the instrument cluster will not be reduced in daytime even when the tail lights/headlights are turned on.

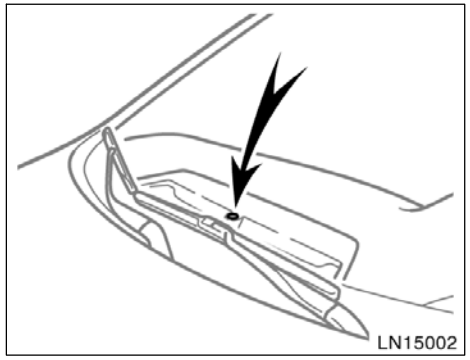

The automatic light control sensor is on the top of the instrument panel.

Do not place anything on the instrument panel, and/or do not affix anything on the windshield to block this sensor.

If you feel that the automatic light control comes into operation too early or too late, have the sensor adjusted by your Toyota dealer.

Automatic light cut off system

Position 1—

The lights automatically turn off when the driver’s door is opened after the ignition switch is set to off.

Position 2 or position 3 with the headlights on—

The lights automatically turn off after 30 seconds when any of the doors or trunk lid is opened and closed after the ignition switch is set to off.

The lights can be turned off immediately by pushing the lock switch on the wireless remote control transmitter with all the doors locked and the trunk lid closed.

The time period before the lights turn off can be changed. For details, ask your Toyota dealer.

If any of the doors or trunk lid is kept open, the lights automatically turn off after 20 minutes.

To turn on the lights again, set the ignition switch at ON or actuate the headlight switch. If you are going to park for over one week, make sure the light switch is in the “OFF” position.

NOTICE

To prevent the battery from being discharged, do not leave the lights on for a long period when the engine is not running.

Daytime Running Light (DRL) system

The Daytime Running Light (DRL) system can make it easier for others to see the front of your vehicle during the day. The DRL system can be helpful in many different driving conditions, but they can be especially helpful in the short periods after dawn and before sunset.

The DRL system will make your headlights come on at a reduced brightness when:

- The ignition is on with the engine running.
- The knob is in the “OFF” position, position 1 or position 3 with the headlights off.
- The parking brake is released.

To turn on the other exterior lights and instrument panel lights, twist the knob to position 1.

Twist the knob to position 2 to turn the headlights to full intensity for night driving.

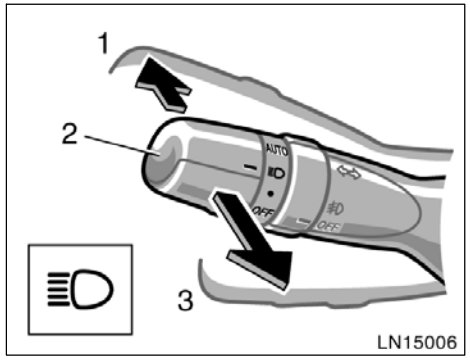

High–Low beams—For high beams, turn the headlights on and push the lever away from you (position 1). Pull the lever toward you (position 2) for low beams.

The headlight high beam indicator light (blue light) on the instrument panel will tell you that the high beams are on.

Flashing the high beam headlights (position 3)—Pull the lever all the way back. The high beam headlights turn off when you release the lever.

You can flash the high beam headlights with the knob turned to “OFF”.

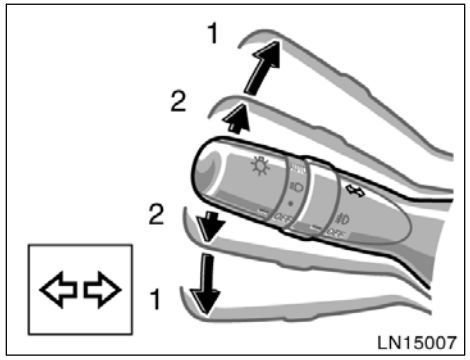

TURN SIGNALS

To signal a turn, push the headlight/turn signal lever up or down to position 1.

The ignition switch must be set at ON.

The lever automatically returns after you make a turn, but you may have to return it by hand after you change lanes.

To signal a lane change, move the lever up or down to the pressure point (position 2) and hold it.

If the turn signal indicator lights (green lights) on the instrument panel flash faster than normal, a front or rear turn signal bulb is burned out. See “Replacing light bulbs” on page 400 in Section 7–3.

Emergency flashers

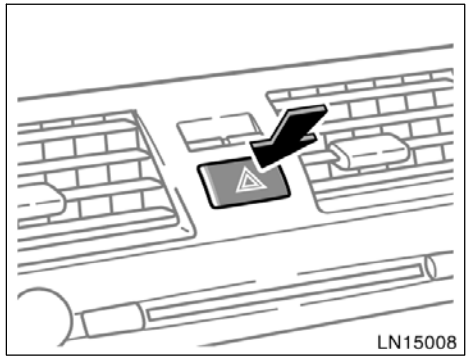

To turn on the emergency flashers, push the switch.

All the turn signal lights will flash. To turn them off, push the switch once again.

Turn on the emergency flashers to warn other drivers if your vehicle must be stopped where it might be a traffic hazard.

Always pull as far off the road as possible.

The turn signal light switch will not work when the emergency flashers are operating.

NOTICE

To prevent the battery from being discharged, do not leave the switch on longer than necessary when the engine is not running.

Instrument panel light control

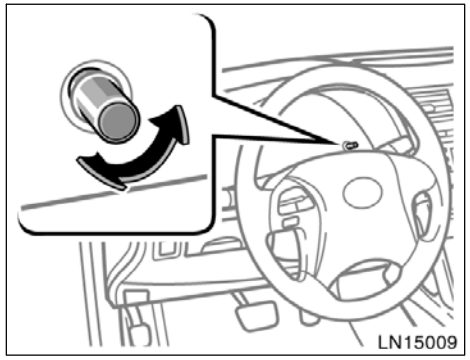

To adjust the brightness of the instrument panel lights, turn the knob.

With the knob turned fully clockwise, the intensity of the instrument panel lights will not be reduced even when the tail lights/headlights are turned on.

Front fog lights

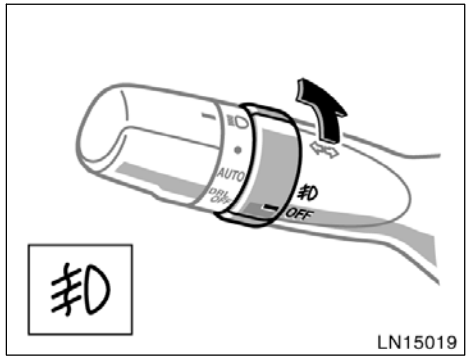

To turn on the front fog lights, twist the band of the headlight and turn signal switch lever. They will come on only when the headlights are on low beam.

Front fog light indicator light on the instrument panel will tell you that the front fog lights are on.

Interior light

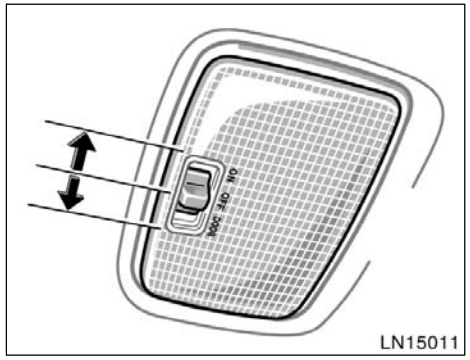

Without moon roof

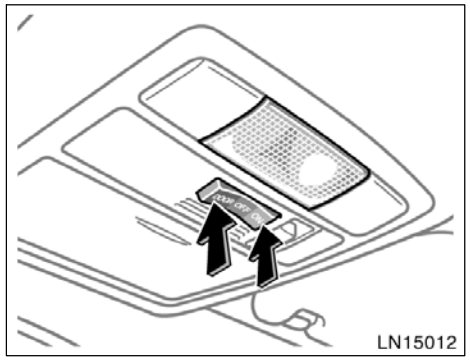

With moon roof

To turn on the interior light, slide the switch.

The interior light switch has the following positions:

“ON”—Keeps the light on all the time.

“OFF”—Turns the light off.

“DOOR”—Turns the light on when the illuminated entry system acts. For details, see “Illuminated entry system” on page 128 in this Section.

Personal lights

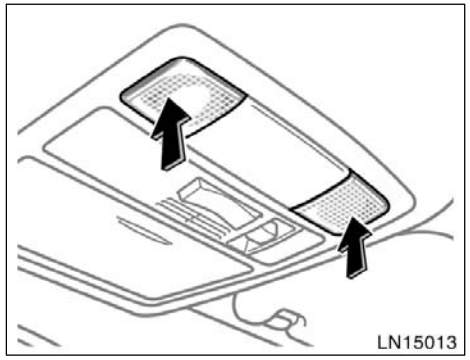

FRONT PERSONAL LIGHTS

To turn on the front personal light, push the lens. To turn it off, push the lens once again.

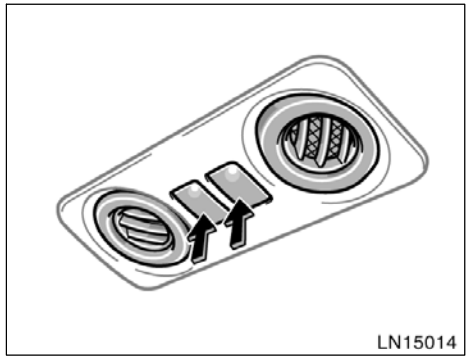

REAR PERSONAL LIGHTS (vehicles with moon roof)

To turn on the rear personal light, push the switch. To turn it off, push the switch once again.

By gently adjusting the shade of the rear personal light, you can change the direction of the light to suit your preference.

When either of the rear side doors is opened, the light on that side turns on automatically. Closing the rear side doors will turn the lights off.

Illuminated entry system

The interior light and ignition switch light will come on when any of the doors are opened. After all the doors are closed, the lights remain on for about 15 seconds before fading out.

Without theft deterrent system—When any of the front doors are unlocked, the lights will come on and remain on for about 15 seconds before fading out.

With theft deterrent system—When any of the doors are unlocked, the lights will come on and remain on for about 15 seconds before fading out.

If all the doors are closed, when the ignition switch is turned off, the lights will come on and remain on for about 15 seconds.

If all the doors are closed and the ignition switch is set at ACC or ON, the lights will fade out.

If all the doors are locked, the lights will fade out.

To prevent the battery being discharged, all of the lights will automatically turn off the key removed (vehicles with key cylinder–type ignition switch) or the ignition is turned off (vehicles with smart key system), and the door is left opened for about 20 minutes.

This feature can be disabled and the duration of the lighting can be changed. For details, ask your Toyota dealer.

ILLUMINATIONS OF ENTRY FUNCTION (vehicles with smart key system)

The interior light and ignition switch light come on and remain on for about 15 seconds when you carry the registered key into the entry function actuation area. For further information of entry function actuation area, see “Smart key system” on page 30 in Section 1–2.

Windshield wipers and washer

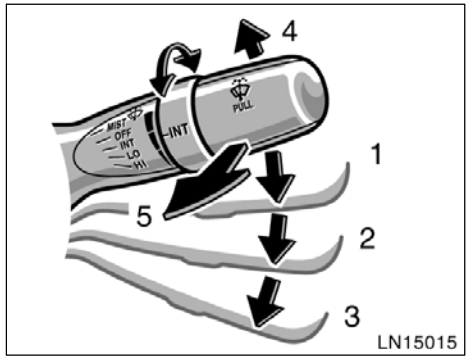

To turn on the windshield wipers, move the lever to the desired setting.

The ignition switch must be set at ON.

Lever position	Operation
Position 1	Intermittent operation
Position 2	Low speed operation
Position 3	High speed operation
Position 4	Single sweep operation
Position 5	Washer on

Rotating the band on the lever lets you adjust the wiper time interval when the wiper lever is in the intermittent position (position 1). Twist the band upward to increase the time between sweeps, and downward to decrease it.

To spray washer fluid, pull the lever toward you.

If the windshield wipers are off, they will operate a couple of times after the washer sprays.

For instructions on adding washer fluid, see “Adding washer fluid” on page 399 in Section 7–3.

In freezing weather, warm the windshield with the defroster before using the washer. This will help prevent the washer fluid from freezing on your windshield, which can block your vision.

NOTICE
Do not operate the wipers if the windshield is dry. It may scratch the glass.

When waxing your vehicle, make sure that the washer nozzles do not become blocked. If a nozzle becomes blocked, contact your Toyota dealer to have the vehicle serviced.

NOTICE
If a nozzle becomes blocked, do not try to clear it with a pin or other object. The nozzle will be damaged.

Rear window and outside rear view mirror defoggers

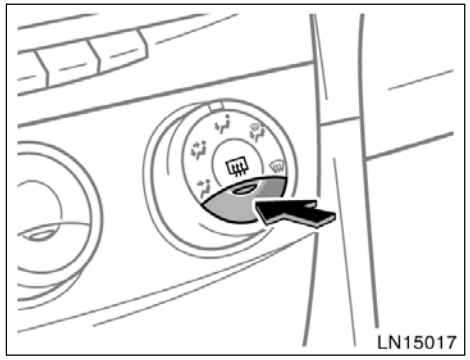

With manual air conditioning controls

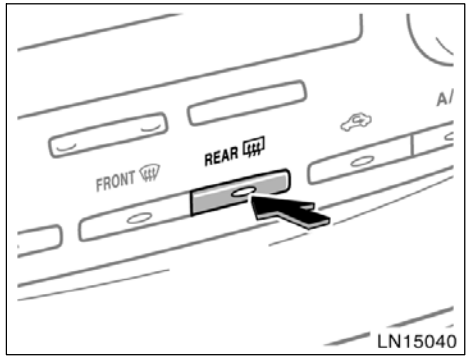

With automatic air conditioning controls

To defog or defrost the rear window, push the switch.

The ignition switch must be set at ON.

The thin heater wires on the inside of the rear window will quickly clear the surfaces. An indicator light will illuminate to indicate the defogger is operating.

On some models, heater panels in the outside rear view mirrors will also quickly clear the surfaces.

Push the switch once again to turn the defogger off.

The system will automatically shut off when the operation time has been completed. The operation time is between 15 minutes and 1 hour depending on the ambient temperature and vehicle speed.

⚠ CAUTION

Since the mirror surfaces can get hot do not touch them when the defogger switch is on.

Make sure you turn the defoggers off when the surfaces are clear. Leaving the defoggers on for a long time could cause the battery to discharge, especially during stop–and–go driving. The defoggers are not designed for drying rain water or for melting snow.

If the outside rear view mirrors are heavily coated with ice, use a spray de–icer before operating the switch.

NOTICE

When cleaning the inside of the rear window, be careful not to scratch or damage the heater wires or connectors.

With manual air conditioning controls only—

When any of the following conditions occurs, the indicator light on the switch may flash and a motor sound may be heard. This does not indicate a malfunction.

- The ignition is set at ON after the battery is reconnected
- Engine starting and stopping is repeated at short intervals
- The engine is started with the low voltage battery

SECTION 1 – 6

OPERATION OF INSTRUMENTS AND CONTROLS

Gauges, Meters and Service reminder indicators

Fuel gauge 132
Engine coolant temperature gauge 132
Tachometer 133
Odometer and two trip meters 134
Outside temperature display 134
Multi–information display 135
Service reminder indicators and warning buzzers 146

Fuel gauge

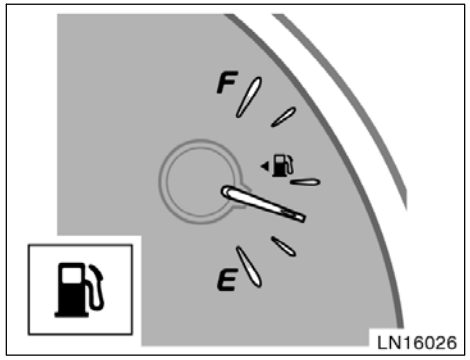

The gauge indicates the approximate quantity of fuel remaining in the tank when the ignition switch is on.

Nearly full—Needle at “F”
Nearly empty—Needle at “E”

It is a good idea to keep the tank over 1/4 full.

If the fuel level approaches “E” or the low fuel level warning light comes on, fill the fuel tank as soon as possible.

On inclines or curves, due to the movement of fuel in the tank, the fuel gauge needle may fluctuate or the low fuel level warning light may come on earlier than usual.

If the fuel tank is completely empty, the malfunction indicator lamp comes on. Fill the fuel tank immediately.

The indicator lamp goes off after driving several times. If the indicator lamp does not go off, contact your Toyota dealer as soon as possible.

Engine coolant temperature gauge

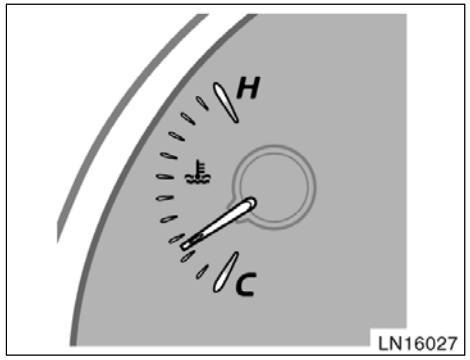

The gauge indicates the engine coolant temperature when the ignition switch is on. The engine operating temperature will vary with changes in weather and engine load.

If the needle moves into the red zone, your engine is too hot. If your vehicle overheats, stop your vehicle and allow the engine to cool.

Your vehicle may overheat during severe operating conditions, such as:

- Driving up a long hill on a hot day.
- Reducing speed or stopping after high speed driving.
- Idling for a long period with the air conditioning on in stop–and–go traffic.
- Towing a trailer.

NOTICE

- ***Do not remove the thermostat in the engine cooling system as this may cause the engine to overheat. The thermostat is designed to control the flow of coolant to keep the temperature of the engine within the specified operating range.***
- ***Do not continue driving with an overheated engine. See “If your vehicle overheats” on page 342 in Section 4.***

Tachometer

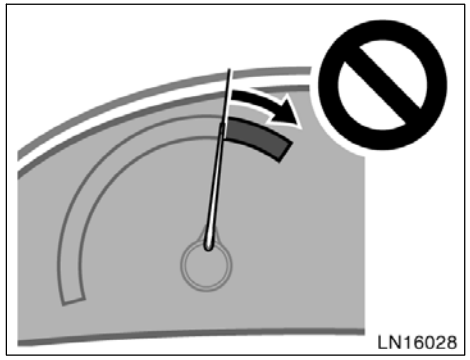

The tachometer indicates engine speed in thousands of rpm (revolutions per minute). Use it while driving to select correct shift points and to prevent engine lugging and over–revving.

Driving with the engine running too fast causes excessive engine wear and poor fuel economy. Remember, in most cases the slower the engine speed, the greater the fuel economy.

NOTICE

Do not let the indicator needle get into the red zone. This may cause severe engine damage.

Odometer and two trip meters

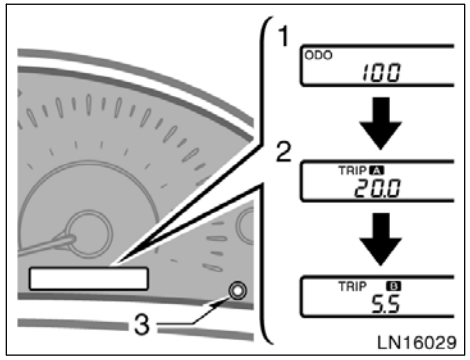

This meter displays the odometer and two trip meters when the ignition switch is on.

1. Odometer—Shows the total distance the vehicle has been driven.
2. Two trip meters—Show two different distances independently driven since the last time each trip meter was set to zero.

   You can use one trip meter to calculate the fuel economy and the other to measure the distance on each trip. All trip meter data is cancelled if the electrical power source is disconnected.
3. Trip meter reset knob—Resets the two trip meters to zero, and also change the meter display.

   To change the meter display, quickly push and release the knob. The meter display changes in the order from the odometer to trip meter A to trip meter B, then back to the odometer each time you push.

   To reset the trip meter A to zero, display the meter A reading, then push and hold the knob until the meter is set to zero. The same process can be applied for resetting the trip meter B.

Outside temperature display

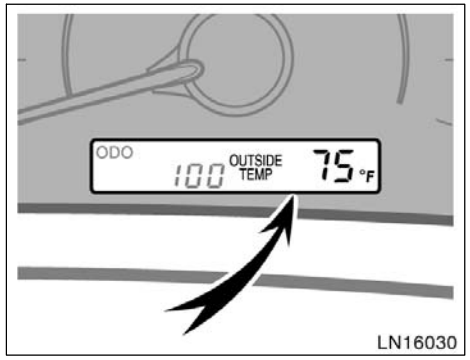

The displayed temperature ranges from –40°C (–40°F) up to 50°C (122°F).

The ignition switch must be set at ON.

If an abnormality exists in the connection of the outside air temperature sensor, “––” or “E” will appear on the display. If “––” or “E” appears on the display, contact your Toyota dealer.

There may be a case that “––” appears momentarily when the ignition switch is quickly set to ON. It is normal if it goes out soon.

Multi–information display—

The following information is displayed on the multi–information display when the ignition switch is set at ON.

- **Cruise information and outside temperature**
- **Odometer and two trip meters**
- **Warning messages**

During ordinary driving, cruise information is displayed. However, in case the vehicle has a system malfunction or if there is some information that the driver should be informed of, a warning message appears on the display. See “—Messages” on page 139 for details.

If the electrical power source has been disconnected from the cruise information display, the display will automatically be set to the initial mode.

When the instrument panel lights are turned on, the brightness of the display will be reduced.

At extremely low temperatures, the multi–information display may respond slowly, and the display changes may be delayed.

CAUTION

Do not adjust the display while the vehicle is moving. Be sure to adjust the display only when the vehicle is stopped.

—Outside temperature and cruise information

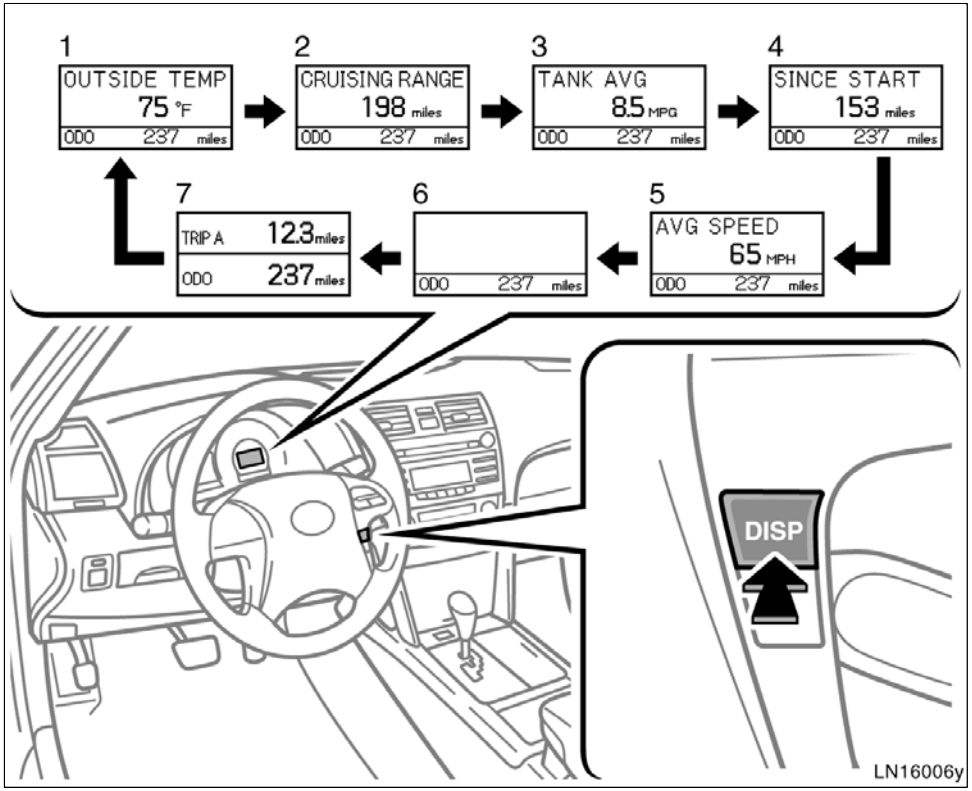

Each time you push the “DISP” button, the display toggles through the following information.

1. Outside temperature
2. Driving range
3. Average fuel consumption
4. Driving distance
5. Average vehicle speed
6. Cruise information off
7. Zoom display of odometer and trip meter

The display will return to the outside temperature display with pushing and holding the “DISP” button for 1 second.

The displayed values in the cruise information display indicate general driving conditions. Accuracy varies with driving habits and road conditions.

When the ignition switch is on, the last previously used mode displayed just before the ignition switch is off will appear.

1. Outside temperature (“OUTSIDE TEMP”)

The outside temperature display indicates the outside air temperature.

The displayed temperature ranges from –40°C (–40°F) up to 50°C (122°F).

If an abnormality exists in the connection of the outside air temperature sensor, “––” or “E” will appear on the display. If “––” or “E” appears on the display, contact your Toyota dealer.

There may be a case that “––” appears momentarily when the ignition switch is quickly set to ON. It is normal if it goes out soon.

2. Driving range (“CRUISING RANGE”)

The distance the vehicle can travel with the remaining fuel is calculated and displayed based on the quantity of remaining fuel and past fuel consumption.

The driving range display indicates the approximate distance that you can drive until the fuel gauge reaches “E”. It is different from the actual distance traveled.

The displayed value is updated every 1 second while driving.

If the fuel gauge malfunctions, the mileage figure will not appear.

When the vehicle is refueled, the driving range is recalculated.

The actual driving range varies with driving habits and road conditions. If fuel consumption is good, the driving range will be longer than indicated. If fuel consumption is poor, the driving range will be shorter than indicated.

If the low fuel level warning light comes on, refuel the vehicle even if the display indicates that the vehicle can be driven further.

3. Average fuel consumption (“TANK AVG”)

Average fuel consumption is calculated and displayed based on total driving distance and total fuel consumption with the engine running.

The displayed value is updated every 10 seconds.

Every time you refuel the vehicle, the displayed value is reset.

4. Driving distance (“SINCE START”)

The driving distance after the engine starts is displayed.

Every time you start the engine, the driving distance display is reset.

5. Average vehicle speed (“AVG SPEED”)

Average vehicle speed is calculated and displayed based on total driving distance and total driving time with the engine running.

The displayed value is updated every 10 seconds.

6. Cruise information off

The display indicates only odometer and two trip meters.

7. Zoom display of odometer and trip meter

The odometer and one of the trip meters are displayed simultaneously. See “—Odometer and two trip meters” described below.

—Odometer and two trip meters

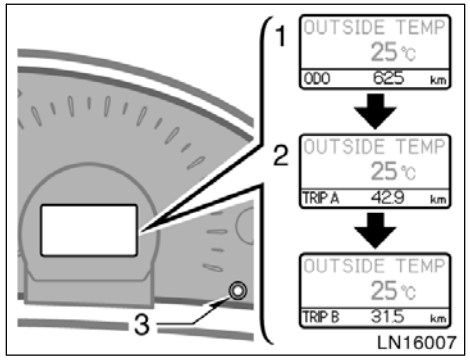

Normal display

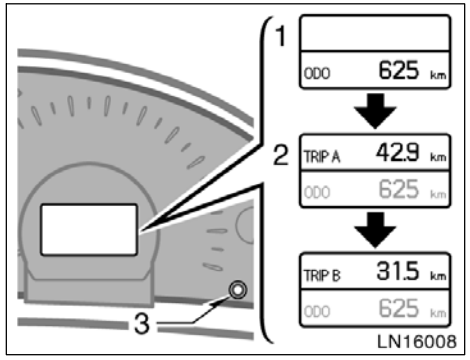

Zoom display

This meter displays the odometer and two trip meters.

Selecting the zoom display of the odometer and trip meter when the cruise information is displayed causes the odometer and one of the trip meters to be displayed simultaneously.

1. Odometer—Shows the total distance the vehicle has been driven.
2. Two trip meters—Show two different distances independently driven since the last time each trip meter was set to zero.

   You can use one trip meter to calculate the fuel economy and the other to measure the distance on each trip. All trip meter data is cancelled if the electrical power source is disconnected.
3. Trip meter reset knob—Resets the two trip meters to zero, and also change the meter display.

   To change the meter display, quickly push and release the knob. The meter display changes in the order from the odometer to trip meter A to trip meter B, then back to the odometer each time you push.

   To reset the trip meter A to zero, display the meter A reading, then push and hold the knob until the meter is set to zero. The same process can be applied for resetting the trip meter B.

—Messages

Message		Status	Action
a	PARK BRAKE	Parking brake is not released.	Release parking brake.
b	LOW ENGINE OIL PRESSURE	Engine oil pressure is low.	Stop and check.
c	WATER TEMP	Engine coolant temperature is high.	Stop your vehicle and allow engine to cool.
d	DRIVER DOOR OPEN PASSENGER DOOR OPEN LEFT REAR DOOR OPEN RIGHT REAR DOOR OPEN	Any of doors are opened.	Close doors completely.
e	HOOD OPEN	Hood is opened.	Close hood completely.

Message		Status	Action
f	TRUNK OPEN	Trunk is opened.	Close trunk completely.
g	CHECK VSC SYSTEM	Vehicle stability control system malfunction is detected.	Take vehicle to your Toyota dealer.
h	SHIFT TO P RANGE	Transmission selector lever is not set “P” position.	Shift the transmission selector lever to “P” position.
i	WHEN STARTING THE ENGINE DEPRESS THE BRAKE PEDAL	Brake pedal is not depressed when starting engine.	Depress brake pedal firmly.
j	KEY IS NOT DETECTED	● Ignition switch is not set to OFF when getting out vehicle carrying the key. ● Key is not detected in the vehicle when ignition switch is set at ON.	● Turn off engine. ● Take care key.
k	LOW KEY BATTERY	Electronic key battery is low.	Replace key battery.
l	CHECK S/T LOCK	Steering lock system malfunction is detected.	Contact your Toyota dealer.

Message		Status	Action
m	S/T IS NOT UNLOCKED	Steering lock is stuck.	Rotate steering wheel slightly.
n	MAINT REQD SOON	Oil change is nearly due.	Check engine oil.
o	MAINT REQD	Oil change is due.	Replace engine oil.
p	LOW WASHER FLUID	Washer fluid level is low.	Add washer fluid.
q	MOONROOF OPEN	Moon roof is opened with ignition switch off.	Close moon roof.

(a) PARK BRAKE

This message is to warn the driver that the parking brake is not completely released at the vehicle speed of 5 km/h (3 mph) or more.

Stop the vehicle and release the parking brake fully.

The message appears with the master warning light and a warning tone sounds.

(b) LOW ENGINE OIL PRESSURE

This message is to warn the driver that the engine oil pressure is too low.

Turn the engine off as soon as possible and contact your Toyota dealer.

The message appears with the master warning light and a warning tone sounds.

(c) WATER TEMP

This message is to warn the driver that the engine coolant temperature is too high.

Stop the vehicle and allow the engine to cool.

The message appears with the master warning light and a warning tone sounds.

NOTICE

Do not continue driving with an overheated engine. See “If your vehicle overheats” on page 342 in Section 4.

(d) DRIVER DOOR OPEN | PASSENGER DOOR OPEN | LEFT REAR DOOR OPEN | RIGHT REAR DOOR OPEN

This message is to remind the driver that any of the doors are opened.

Close the door securely.

The message appears with the master warning light and a warning tone sounds when the vehicle speed rises above 5 km/h (3 mph).

(e) HOOD OPEN

This message is to remind the driver that the hood is opened.

Close the hood securely.

The message appears with the master warning light and a warning tone sounds when the vehicle speed rises above 5 km/h (3 mph).

(f) TRUNK OPEN

This message is to remind the driver that the trunk is opened.

Close the trunk securely.

The message appears with the master warning light a warning tone sounds when the vehicle speed rises above 5 km/h (3 mph).

(g) CHECK VSC SYSTEM

This message is to warn the driver that there is a problem somewhere in the vehicle stability control system or traction control system.

Contact your Toyota dealer to service vehicle.

In this case, the brakes will operate when applied, and normal driving may be resumed.

The message appears with the master warning light and a warning tone sounds.

(h) SHIFT TO P RANGE

This message is to warn the driver that the transmission is not in the “P” position when leaving the vehicle.

Put the transmission in the “P” position.

If the transmission is not in the “P” position with the ignition switch on, the message appears with the master warning light and a warning tone sounds when the driver’s door is opened.

(i) WHEN STARTING THE ENGINE DEPRESS THE BRAKE PEDAL

This message is to remind the driver that the brake pedal is not depressed when starting the engine.

Depress the brake pedal firmly and press the “ENGINE START STOP” switch. For the starting procedure, see “How to start the engine” on page 316 in Section 3.

If the brake pedal is not depressed, the message appears and a warning tone sounds when the engine is started.

(j) KEY IS NOT DETECTED

When this message appears in the following cases, a warning tone sounds.

- The key is not detected in the vehicle when the “ENGINE START STOP” switch is pushed.
- The key is not detected in the vehicle because someone has taken the key outside of the vehicle without turning the engine off. At this time, a warning tone sounds. The above message turns off if the ignition switch is set at OFF or the key is in the vehicle.

In addition to either of the above conditions, if you get out from the vehicle, carrying the key when the transmission selector lever is in a position other than “P” and the ignition switch is not set to OFF, “SHIFT TO P RANGE” and “KEY IS NOT DETECTED” appear alternately.

(k) LOW KEY BATTERY

This message is to warn the driver that the electronic key battery of the smart entry and start system is low.

Change the key battery as soon as possible to ensure that the smart entry and start system operates properly.

The message appears with the master warning light and a warning tone sounds.

(l) CHECK S/T LOCK

This message warns the driver that the steering lock function malfunctions. At this time, the amber indicator light on the “ENGINE START STOP” switch flashes.

The engine will not start in this case. Contact your Toyota dealer as soon as possible.

The message appears with the master warning light and a warning tone sounds.

(m) S/T IS NOT UNLOCKED

This message appears when the steering lock is stuck. The message appears for 15 seconds. At this time, the green indicator light on the “ENGINE START STOP” switch flashes.

To free the steering lock, rotate the steering wheel slightly left or right while pressing the “ENGINE START STOP” switch.

The message appears with the master warning light and a warning tone sounds.

(n) MAINT REQD SOON

This message is to remind the driver to change the engine oil. The message is a prior notice.

Toyota recommends that the engine oil be changed as soon as possible.

If the driving range after the previous oil change reaches 7200 km (4500 miles), the message appears for about 15 seconds with the master warning light and a warning tone sounds.

The engine oil maintenance data must be reset after the engine oil change. See following “Resetting the engine oil maintenance data”.

(o) MAINT REQD

This message is to remind the driver to change the engine oil.

Change the engine oil as soon as possible.

If the driving range after the previous oil change reaches 8000 km (5000 miles), the message appears with the master warning light and a warning tone sounds. The message stays on with the ignition switch on.

The engine oil maintenance data must be reset after the engine oil change. See “Resetting the engine oil maintenance data” below for the procedure to reset the system.

Resetting the engine oil maintenance data

The engine oil maintenance data must be reset after replacement of the engine oil. Reset the data by the following procedure:

1. Turn off the engine with the trip meter A reading shown.

For details, see “—Odometer and two trip meters” on page 138 in this Section.

2. The ignition switch must be set at ON while holding down the trip meter reset knob. A message “OIL MILEAGE RESET MODE” will appear on the display.
3. Hold down the knob at least 5 seconds. A message “COMPLETE” will appear, then the message “OIL MILEAGE RESET” goes off.

(p) LOW WASHER FLUID

This message appears when the washer fluid level becomes very low.

Fill the tank as soon as possible.

The message appears with the master warning light a warning tone sounds.

(q) MOONROOF OPEN

This message appears when the driver’s door is opened with the ignition switch turned off and the moon roof opened.

When you leave your vehicle, be sure to close the moon roof.

The message appears with the master warning light and a warning tone sounds.

Service reminder indicators and warning buzzers

If the indicator or buzzer comes on...		Do this.
(a)	BRAKE or (indicator and buzzer)	If parking brake is off, stop immediately and contact Toyota dealer.
(b)	(indicator and buzzer)	Fasten driver’s seat belt.
(c)	PASSENGER (indicator and buzzer)	Fasten front passenger’s seat belt.
(d)		Stop immediately and contact Toyota dealer.
(e)		Stop and check.
(f)	CHECK or	Take vehicle to Toyota dealer.
(g)		Fill up tank.

If the indicator or buzzer comes on...		Do this.
(h)	ABS or	Take vehicle to Toyota dealer. If brake system warning light is also on, stop immediately and contact Toyota dealer.
(i)	(indicator and buzzer)	Close all doors and trunk lid.
(j)		Take vehicle to Toyota dealer immediately.
(k)	VSC	Take vehicle to Toyota dealer.
(l)		Adjust tire inflation pressure (including spare tire). If the light blinks, contact Toyota dealer.
(m)		Read a warning message on multi–information display.
(n)		Add washer fluid.

If the indicator or buzzer comes on...		Do this.
(o)	MAINT REQD	Replace engine oil.
(p)	Key reminder buzzer	Remove key.
(q)	Parking brake reminder buzzer	Release parking brake.
(r)	Open moon roof reminder buzzer	Close moon roof.

(a) Brake System Warning Light and Buzzer

This light comes on in the following cases when the ignition switch is set at ON.

- **When the parking brake is applied...**

This light comes on for a few seconds when the ignition switch is set at ON even after the parking brake is released.

If the vehicle speed rises above 5 km/h (3 mph) with the parking brake applied for 1 seconds or more, a buzzer sounds.

- **When the brake fluid level is low...**

CAUTION

It is dangerous to continue driving normally when the brake fluid level is low.

Have your vehicle checked at your Toyota dealer in the following cases:

- The light does not come on even if the parking brake is applied when the ignition switch is set at ON.
- The light does not come on even if the ignition switch is set at ON with the parking brake released.

A warning light turning on briefly during operation does not indicate a problem.

CAUTION

If either of the following conditions occurs, immediately stop your vehicle at a safe place and contact your Toyota dealer.

- **The light does not turn off even after the parking brake is released while the engine is running.**

  In this case, the brakes may not work properly and your stopping distance will become longer. Depress the brake pedal firmly and bring the vehicle to an immediate stop.
- **The brake system warning light remains on together with the “ABS” warning light.**

  In this case, not only the anti–lock brake system will fail but also the vehicle will become extremely unstable during braking.

(b) Driver’s Seat Belt Reminder Light and Buzzer

The light and buzzer act as a reminder to buckle up the driver’s seat belt.

Once the ignition switch is set at ON or engine start, the reminder light flashes and buzzer sounds if the driver’s seat belt is not fastened. Unless the driver fastens the belt, the light continues flashing and the buzzer sounds for about 6 seconds.

If the vehicle speed rises above 20 km/h (12 mph) with the seat belt unfastened, the buzzer will sound for about 10 seconds. Then, if the seat belt is still unfastened, the buzzer will sound in a different tone for 20 seconds. Even if the vehicle speed drops below 20 km/h (12 mph), the buzzer will continue to sound. To stop the buzzer, fasten the seat belt. If the buzzer still sounds, make sure the front passenger’s seat belt is fastened.

The vehicle speed linked seat belt reminder buzzer can be disabled. For details, contact your Toyota dealer.

However, Toyota recommends that the seat belt reminder buzzer be operational to alert the driver and front passenger that the seat belts are not fastened.

(c) Front Passenger’s Seat Belt Reminder Light and Buzzer

The light and buzzer act as a reminder to have the front passenger buckle up the seat belt.

Once the ignition switch is set at ON or engine start, the reminder light flashes if a passenger sits in the front passenger seat and does not fasten the seat belt. Unless the front passenger fastens the belt, the light continue flashing.

If the vehicle speed rises above 20 km/h (12 mph) with the seat belt unfastened, the buzzer will sound for about 10 seconds. Then, if the seat belt is still unfastened, the buzzer will sound in a different tone for 20 seconds. Even if the vehicle speed drops below 20 km/h (12 mph), the buzzer will continue to sound. To stop the buzzer, fasten the seat belt. If the buzzer still sounds, make sure the driver’s seat belt is fastened.

If luggage or other load is placed on the front passenger seat, depending on its weight, the reminder light to flash and buzzer to sound.

The vehicle speed linked seat belt reminder buzzer can be disabled. For details, contact your Toyota dealer.

However, Toyota recommends that the seat belt reminder buzzer be operational to alert the driver and front passenger that the seat belts are not fastened.

(d) Charging System Warning Light

This warning light comes on when the ignition switch is set at ON, and goes off when the engine is started.

When there are problems in the charging system while the engine is running, the warning light comes on.

NOTICE

When the charging system warning light comes on while the engine is running, malfunctions such as the engine drive belt being broken may have occurred. If the warning light comes on, immediately stop the vehicle in a safe place and contact your Toyota dealer.

(e) Low Engine Oil Pressure Warning Light

This light warns that the engine oil pressure is too low.

If it flickers or stays on while you are driving, pull off the road to a safe place and stop the engine immediately. Call a Toyota dealer or qualified repair shop for assistance.

The light may occasionally flicker when the engine is idling or it may come on briefly after a hard stop. There is no cause for concern if it then goes out when the engine is accelerated slightly.

The light may come on when the oil level is extremely low. It is not designed to indicate low oil level, and the oil level must be checked using the level dipstick.

NOTICE

Do not drive the vehicle with the warning light on—even for one block. It may ruin the engine.

(f) Malfunction Indicator Lamp

This lamp comes on when the ignition switch is set at ON and goes off after the engine starts. This means that the warning light system is operating properly.

If the lamp remains on, or the lamp comes on while driving, first check the followings.

- Empty fuel tank

  If the fuel tank is empty, refuel immediately.

- Loose fuel tank cap

  If the fuel tank cap is loose, securely tighten it.

These cases are temporary malfunctions. The malfunction indicator lamp will go off after taking several driving trips.

If the lamp does not go off even after several trips, contact your Toyota dealer as soon as possible.

If the fuel tank is not empty or the fuel tank cap is not loose...

- There is a problem somewhere in the engine, emission control system, electronic throttle control system, automatic transmission electrical system or warning light system itself.

Contact your Toyota dealer as soon as possible to service the vehicle.

If engine speed does not increase when the accelerator pedal is depressed, there may be a problem somewhere in the electronic throttle control system.

At this time, vibration may occur. However, if you depress the accelerator pedal more firmly and slowly, you can drive your vehicle at low speeds. Have your vehicle checked by your Toyota dealer as soon as possible.

Even if the abnormality of the electronic throttle control system is corrected during low speed driving, the system may not recover until the engine is stopped and the engine is turned off.

⚠ CAUTION

Be especially careful to prevent accidental pedal operation.

Emissions Inspection and Maintenance (I/M) programs

Your vehicle may not pass a state emission inspection if the malfunction indicator lamp remains on. Contact your Toyota dealer to check your vehicle’s emission control system and OBD (On–Board Diagnostics) system before taking your vehicle for the inspection.

For details, see “Emissions Inspection and Maintenance (I/M) programs” on page 370 in Section 6.

(g) Low Fuel Level Warning Light

This light comes on when the fuel level in the tank becomes nearly empty. Fill up the tank as soon as possible.

On inclines or curves, due to the movement of fuel in the tank, the low fuel level warning light may come on earlier than usual.

(h) “ABS” Warning Light

Vehicles without vehicle stability control system—

The light comes on with the ignition switch is set at ON. If the anti–lock brake system works properly, the light turns off after a few seconds. Thereafter, if the system malfunctions, the light comes on again.

When the “ABS” warning light is on (and the brake system warning light is off), the anti–lock brake system does not operate, but the brake system still operates conventionally.

When the “ABS” warning light is on (and the brake system warning light is off), the anti–lock brake system does not operate, so the wheels could lock up during a sudden braking or braking on slippery road surfaces.

If either of the following conditions occurs, this indicates a malfunction somewhere in the components monitored by the warning light system. Contact your Toyota dealer as soon as possible to service the vehicle.

- The light does not come on when the ignition switch is set at ON or remains on.
- The light comes on while you are driving.

A warning light turning on briefly during operation does not indicate a problem.

⚠ CAUTION

If the “ABS” warning light remains on together with the brake system warning light, immediately stop your vehicle at a safe place and contact your Toyota dealer.

In this case, not only the anti–lock brake system will fail but also the vehicle will become extremely unstable during braking.

Vehicles with vehicle stability control system—

The light comes on when the ignition switch is set at ON. If the anti–lock brake system and the brake assist system work properly, the light turns off after a few seconds. Thereafter, if the system malfunctions, the light comes on again.

When the “ABS” warning light is on (and the brake system warning light is off), the anti–lock brake system and the brake assist system do not operate, but the brake system still operates conventionally.

When the “ABS” warning light is on (and the brake system warning light is off), the anti–lock brake system does not operate, so the wheels could lock up during a sudden braking or braking on slippery road surfaces.

If either of the following conditions occurs, this indicates a malfunction somewhere in the components monitored by the warning light system. Contact your Toyota dealer as soon as possible to service the vehicle.

- The light does not come on when the ignition switch is set at ON or remains on.
- The light comes on while you are driving.

A warning light turning on briefly during operation does not indicate a problem.

⚠ CAUTION

If the “ABS” warning light remains on together with the brake system warning light, immediately stop your vehicle at a safe place and contact your Toyota dealer.

In this case, not only the anti–lock brake system will fail but also the vehicle will become extremely unstable during braking.

(i) Open Door Warning Light and Buzzer

This light remains on until all the doors and trunk lid are completely closed.

The buzzer also sounds once when any of the doors or trunk lid is not completely closed at the vehicle speed 5 km/h (3 mph) or more. Stop the vehicle and close the door and trunk lid completely.

(j) SRS Warning Light

This indicator comes on when the ignition switch is set at ON. It goes off after about 6 seconds. This means the SRS front airbags and seat belt pretensioners are operating properly.

This warning light system monitors the airbag sensor assembly, front airbag sensors, side and curtain shield airbag sensors, curtain shield airbag sensors, driver’s seat position sensor, driver’s seat belt buckle switch, front passenger occupant classification system, “AIRBAG ON” indicator light, “AIRBAG OFF” indicator light, front passenger’s seat belt buckle switch, seat belt pretensioner assemblies, inflators, interconnecting wiring and power sources.

If any of the following conditions occurs, this indicates a malfunction of the airbags or seat belt pretensioners. Contact your Toyota dealer as soon as possible to.

- The light does not come on when the ignition switch is set at ON or remains on for more than 6 seconds.
- The light comes on or starts flashing while driving.

The SRS warning light and “AIRBAG OFF” indicator light will come on if there is a malfunction in the front passenger occupant classification system.

(k) “VSC” Warning Light

The light warns that there is a problem somewhere in the vehicle stability control system or traction control system.

The light will come on when the ignition switch is set at ON and will go off after a few seconds.

If the light comes on while driving, the vehicle stability control system and traction control system do not work. However, as conventional braking operates when applied, there is no problem to continue driving.

In the following cases, contact your Toyota dealer:

- The warning light does not come on after the ignition switch is set at ON.
- The warning light remains on after the ignition switch is set at ON.
- The warning light comes on while driving.

(l) Low Tire Pressure Warning Light

This light warns that the tire pressure of one or more of your tires (including the spare tire) is low. The light comes on when the ignition switch is set at ON. It goes off after a few seconds. This indicates that the tire pressure warning system is functioning properly.

If the warning light comes on, stop your vehicle in a safe place as soon as possible and check that the inflation pressure of all tires (including the spare tire) is as specified on the tire and loading information label. (See “Checking tire inflation pressure” on page 385 in Section 7–2.) The light should go off a few minutes after the tire pressure is adjusted.

If the warning light comes on after blinking for 1 minute, the tire pressure warning system may be malfunctioning. Contact your Toyota dealer.

For details, see “Tire pressure warning system” on page 174 in Section 1–7.

(m) Master Warning Light

If the master warning light comes on, a message appears on the multi–information display. Depending on the conditions a warning tone may sound.

(n) Low Windshield Washer Fluid Level Warning Light

The light warns that the windshield washer fluid level is too low. Add washer fluid at your earliest opportunity. (For instructions, see “Adding washer fluid” on page 399 in Section 7–3.)

The light will come on when the ignition switch is set at ON and will go off after a few seconds.

(o) Engine Oil Replacement Reminder Light

This light acts as a reminder to replace the engine oil.

This light will come on when the ignition switch is set at ON and will go off after about a few seconds.

When you drive for about 7200 km (4500 miles) after the engine oil replacement, this light illuminates for about 3 seconds and then flashes for about 15 seconds with the ignition switch is set at ON. If you continue driving without replacing the engine oil, and if the distance driven exceeds 8000 km (5000 miles), the light will come on after the ignition switch is set at ON. The light will remain on thereafter.

If the light is flashing, we recommend that you replace the engine oil at an early opportunity depending on the driving and road conditions. If the light comes on, replace it as soon as possible.

The system must be reset after the engine oil replacement. Reset the system by the following procedure:

1. Turn the engine off with the trip meter A reading shown. (For details, see “Odometer and two trip meters” on page 134 in this Section.)
2. Set the ignition switch at ON while holding down the trip meter reset knob.

Hold down the knob for at least 5 seconds. The odometer indicates “000000” and the light goes off.

If the system fails to reset, the light will continue flashing.

(p) Key Reminder Buzzer (vehicles with key cylinder–type ignition switch)

This buzzer act as a reminder to remove the key when you open the driver’s door with the engine off.

(q) Parking Brake Reminder Buzzer

The buzzer acts once when the parking brake is not completely released at the vehicle speed of 5 km/h (3 mph) or more. Stop the vehicle and release the parking brake fully.

(r) Open Moon Roof Reminder Buzzer

This buzzer acts as a reminder to close the moon roof when you turn the ignition switch off and open the driver’s door.

CHECKING SERVICE REMINDER INDICATORS (except the low fuel level warning light)

1. Apply the parking brake.
2. Open one of the doors.
   The open door warning light should come on.
3. Close the door.
   The open door warning light should go off.
4. Set the ignition switch at ON, but do not start the engine.
   All the service reminder indicators except the open door warning light should come on.

   Without multi–information display—The “ABS” and “VSC” warning lights, low windshield washer fluid level warning light, low tire pressure warning light and engine oil replacement reminder light will go off after a few seconds. The SRS warning light goes off after about 6 seconds. (Slip indicator light will also come on and go off after a few seconds. Front passenger occupant classification indicator lights will also come on and go off after about four seconds.)

   With multi–information display—The “ABS” warning light, low tire pressure warning light and master warning light will go off after a few seconds. The SRS warning light goes off after about 6 seconds. (Slip indicator light will also come on and go off after a few seconds. Front passenger occupant classification indicator lights will also come on and go off after about four seconds.)

If any service reminder indicator or warning buzzer does not function as described above, have it checked by your Toyota dealer as soon as possible.

SECTION 1 – 7

OPERATION OF INSTRUMENTS AND CONTROLS

Ignition switch, Transmission and Parking brake

Ignition switch 158
Automatic transmission 161
Manual transmission 169
Traction control system 170
Vehicle stability control system 172
Tire pressure warning system 174
Parking brake 180
Cruise control 181

Ignition switch (with key cylinder–type ignition switch)

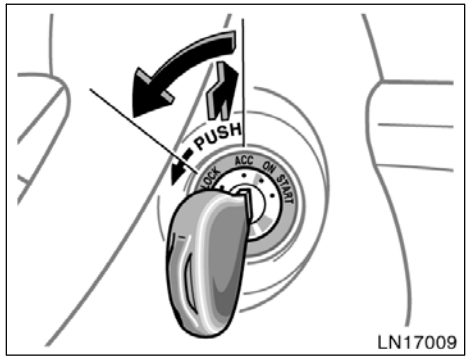

“START”—Starter motor on. The key will return to the “ON” position when released.

For starting tips, see page 315 in Section 3.

“ON”—Engine on and all accessories on.

This is the normal driving position.

“ACC”—Accessories such as the radio operate, but the engine is off.

If you leave the key in the “ACC” or “LOCK” position and open the driver’s door, a buzzer will remind you to remove the key.

“LOCK”—Engine is off and the steering wheel is locked. The key can be removed only at this position.

You must push in the key to turn the key from “ACC” to the “LOCK” position. On vehicles with an automatic transmission, the selector lever must be put in the “P” position before pushing the key.

Once you remove the key, the engine immobilizer system is automatically set. (See “Engine immobilizer system” on page 18 in Section 1–2.)

When starting the engine, the key may seem stuck at the “LOCK” position. To free it, first be sure the key is pushed all the way in, and then rotate the steering wheel slightly while turning the key gently.

Approximately five hours after the engine is turned off, you may hear sound coming from underneath the luggage compartment for several minutes. This is normal operation and does not indicate a malfunction. (See “Leak detection pump” on page viii.)

It is not a malfunction if the needle on all meters and gauges move slightly when the key is turned to the “ACC”, “ON” or “START” position.

⚠ CAUTION

For manual transmission:
Never remove the key when the vehicle is moving, as this will lock the steering wheel and result in loss of steering control.

NOTICE

Do not leave the key in the “ON” position if the engine is not running. The battery will discharge and the ignition could be damaged.

Ignition switch (with smart key system)

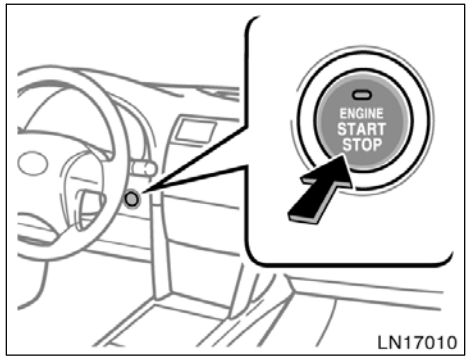

When the key is in the vehicle, pressing the “ENGINE START STOP” switch (engine switch) allows you to start and stop the engine or choose at the ACC, ON, or ignition switch off.

When the brake pedal is not depressed, pressing the “ENGINE START STOP” switch changes the ignition switch mode as follows. Press the “ENGINE START STOP” switch slowly and firmly.

First time—ACC (accessory) mode (illuminate amber)
Accessories such as the radio operate.

Second time—ON mode (illuminate amber)
All accessories on.

Third time—Power off (indicator light off)

Pressing the “ENGINE START STOP” switch again returns the ignition switch to ACC.

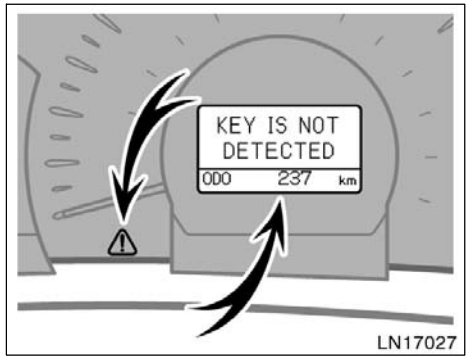

If a buzzer sounds and the master warning light comes on for 5 seconds when pressing the “ENGINE START STOP” switch, this indicates that the key is not in the vehicle. The “KEY IS NOT DETECTED” message will also appear on the multi–information display.

If the brake pedal is depressed, the indicator light will turn green, regardless of which mode is selected. When the indicator light is green, pressing the “ENGINE START STOP” switch once starts the engine. (For starting tips, see “How to start the engine” on page 316 in Section 3.)

When the engine switch is changed from ON (with the engine off) to off and then changed to ACC, “DEPRESS THE BRAKE PEDAL” is appeared on the multi–information display.

If the amber indicator light on the “ENGINE START STOP” switch blinks, this indicates a malfunction of the push start system. Turn off the engine immediately and contact your Toyota dealer.

It is not a malfunction if the needle on all meters and gauges move slightly when the ignition switch is set at ACC, ON or when the engine starts.

NOTICE
Do not leave the ignition switch at ON if the engine is not running. The battery will discharge and the ignition could be damaged.

When the battery is disconnected or run down, the push button start function memorizes the current mode. After you reconnect, replace, or recharge the battery, the memorized mode is selected automatically. In any of these cases, turn off the engine if the engine comes on.

Automatic transmission

▶2.4 L 4–cylinder (2AZ–FE) engine

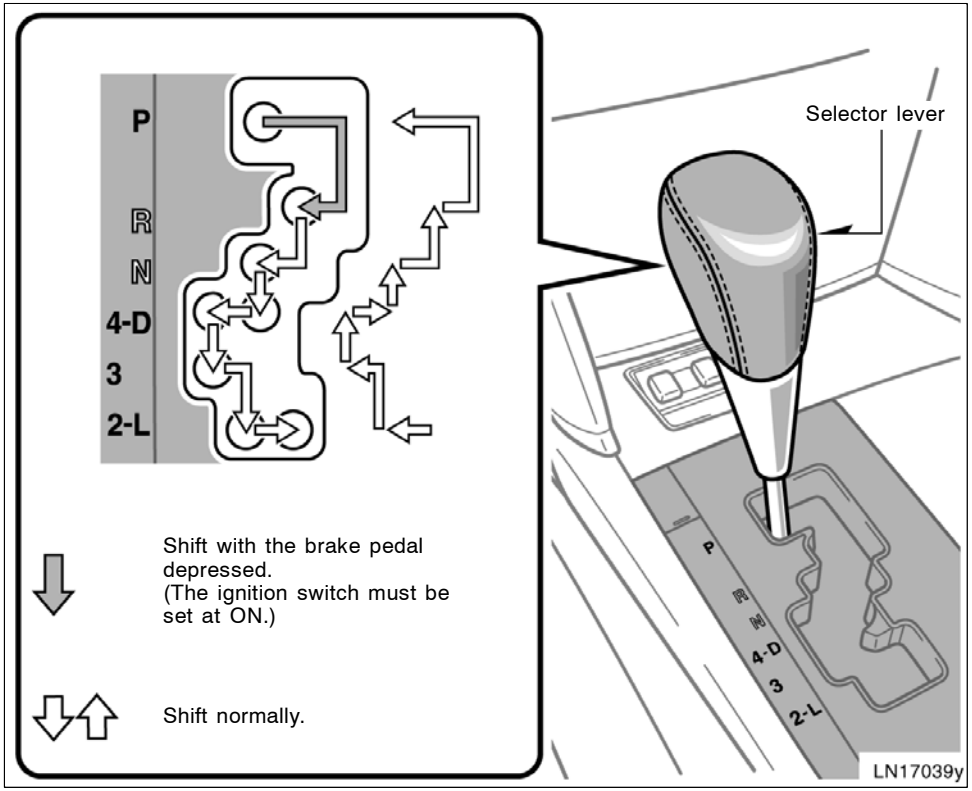

Your automatic transmission has a shift lock system to minimize the possibility of incorrect operation. This means you can only shift out of “P” position when the brake pedal is depressed (with the ignition switch is set at ON).

(a) Selector lever

The shift position is also displayed on the instrument cluster.

P: Parking, engine starting and key removal

R: Reverse

N: Neutral

D: Normal driving

4: Engine braking

3, 2: Stronger engine braking

L: Maximum engine braking

(b) Normal driving

1. Start the engine as instructed in “How to start the engine” on page 316 in Section 3. The transmission must be in “P” or “N”.
2. With your foot holding down the brake pedal, shift the selector lever to “D”.

When the lever is in the “D” position, the automatic transmission system will select the most suitable gear for running conditions such as normal cruising, hill climbing, hard towing, etc.

Always use the “D” position for better fuel economy and quieter driving. If the engine coolant temperature is low, the transmission will not shift into overdrive gear even in the “D” position.

CAUTION

Never put your foot on the accelerator pedal while shifting.

3. Release the parking brake and brake pedal. Depress the accelerator pedal slowly for smooth starting.

(c) Using engine braking

To use engine braking, you can downshift the transmission as follows:

- Shift into the “4” position. The transmission will downshift to fourth gear and engine braking will be enabled.
- Shift into the “3” position. The transmission will downshift to third gear when the vehicle speed drops down to or lower than 141 km/h (76 mph), and stronger engine braking will be enabled.
- Shift into the “2” position. The transmission will downshift to second gear when the vehicle speed drops down to or lower than 89 km/h (48 mph), and stronger engine braking will be enabled.
- Shift into the “L” position. The transmission will downshift to first gear when the vehicle speed drops down to or lower than 40 km/h (21 mph), and maximum engine braking will be enabled.

Vehicles with cruise control—When the cruise control is being used, even if you downshift from “D” to “4”, engine braking will not be enabled because the cruise control is not cancelled.

For ways to decrease the vehicle speed, see “Cruise control” on page 181 in this Section.

CAUTION

Be careful when downshifting on a slippery surface. Abrupt shifting could cause the vehicle to skid or spin.

(d) Using “3”, “2” and “L” positions

The “3”, “2” and “L” positions are used for strong engine braking as described previously.

With the selector lever in “3”, “2” or “L”, you can start the vehicle in motion as with the lever in “D”.

With the selector lever in “3” or “2”, the vehicle will start in first gear and automatically shift to third gear or second gear.

With the selector lever in “L”, the transmission is engaged in first gear.

NOTICE

- ***Be careful not to over–rev the engine. Watch the tachometer to keep engine rpm from going into the red zone. The approximate maximum allowable speed for each position is given below for your reference:***

  “3” . . . . . 152 km/h (94 mph)
  “2” . . . . . 98 km/h (60 mph)
  “L” . . . . . 54 km/h (33 mph)

- ***Do not continue hill climbing or hard towing for a long time in the “3”, “2” or “L” position. This may cause severe automatic transmission damage from overheating. To prevent such damage, “4” position should be used in hill climbing or hard towing.***

(e) Backing up

1. Bring the vehicle to a complete stop.
2. With the brake pedal held down with your foot, shift the selector lever to the “R” position.

NOTICE

Never shift into reverse while the vehicle is moving.

(f) Parking

1. Bring the vehicle to a complete stop.
2. With the brake pedal pressed down, fully depress the parking brake pedal to apply the parking brake securely.
3. With the brake pedal pressed down, shift the selector lever to the “P” position.

CAUTION

Never attempt to move the selector lever into “P” position under any circumstances while the vehicle is moving. Serious mechanical damage and loss of vehicle control may result.

(g) Good driving practice

- If the transmission repeatedly shifts up and down between fourth gear and overdrive when climbing a gentle slope, shift the selector lever to the “4” position. Be sure to shift the selector lever to the “D” position immediately afterward.
- When towing a trailer, in order to maintain engine braking efficiency, do not use overdrive.

CAUTION

Always keep your foot on the brake pedal while stopped with the engine running. This prevents the vehicle from creeping.

NOTICE

Always use the brake pedal or the parking brake to hold the vehicle on an upgrade. Do not attempt to hold the vehicle using the accelerator pedal, as this can cause the transmission to overheat.

(h) If you cannot shift the selector lever out of “P” position

If you cannot shift the selector lever from “P” position even though the brake pedal is depressed, use the shift lock override button. For instructions, see “If you cannot shift automatic transmission selector lever” on page 355 in Section 4.

▶3.5 L V6 (2GR–FE) engine

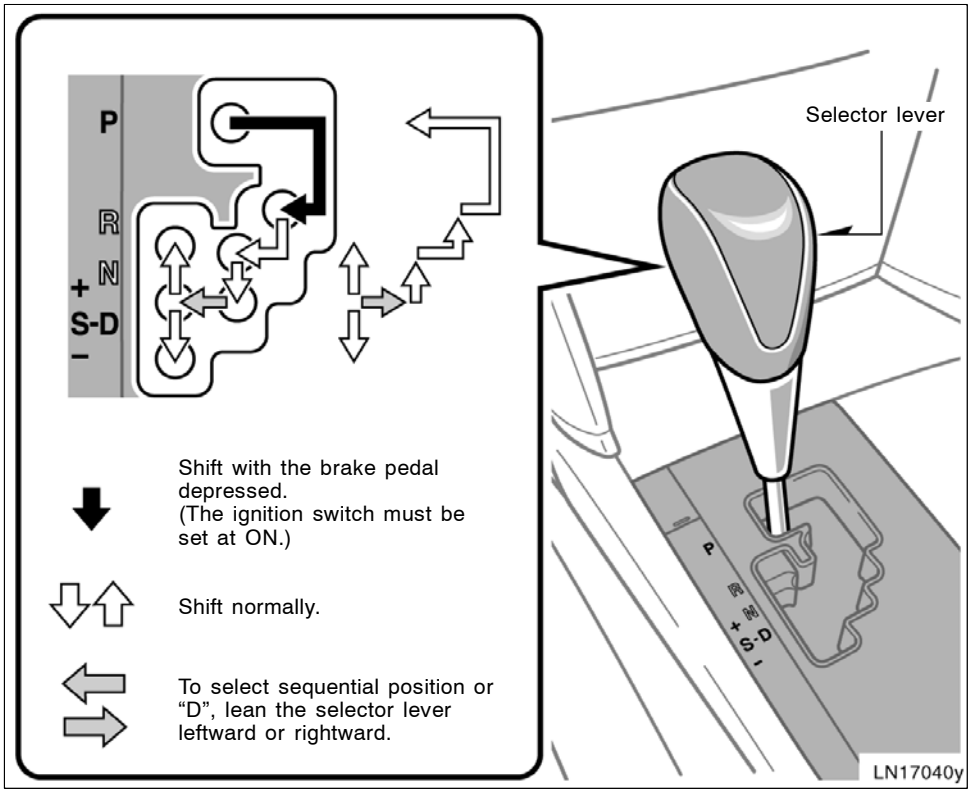

Your automatic transmission has a shift lock system to minimize the possibility of incorrect operation. This means you can only shift out of “P” position when the brake pedal is depressed (with the ignition switch is set at ON).

(a) Selector lever

The shift position is also displayed on the instrument cluster.

P: Parking, engine starting and key removal

R: Reverse

N: Neutral

D: Normal driving (shifting into overdrive)

S: “S” mode driving

+: Upshift range

–: Downshift range

(b) Normal driving

1. Start the engine as instructed in “How to start the engine” on page 316 in Section 3. The transmission must be in “P” or “N”.
2. With your foot holding down the brake pedal, shift the selector lever to “D”.

When the lever is in the “D” position, the automatic transmission system will select the most suitable gear for running conditions such as normal cruising, hill climbing, hard towing, etc.

Always use the “D” position for better fuel economy and quieter driving. In this position, shifting into the overdrive gear is possible. If the engine coolant temperature is low, the transmission will not shift into the overdrive gear even in the “D” position.

⚠ CAUTION

Never put your foot on the accelerator pedal while shifting.

3. Release the parking brake and brake pedal. Depress the accelerator pedal slowly for smooth starting.

AI (Artificial Intelligence) shifting control—

AI shifting control selects the most suitable shift range automatically according to the driver’s operation and driving condition.

AI shifting control operates automatically with the selector lever in the “D” position. When the lever is moved to the “S” position, this function will be cancelled.

- **Shifting control on the slope:**
  On inclines, you can drive smoothly with reduced shifting quantity. On declines, the vehicle will shift down automatically to obtain optimum engine braking and reduce the driver’s foot braking load.
- **Automatic shifting point change control:**
  The most suitable shift range is selected depending on the driver’s accelerator pedal operation and vehicle condition.

(c) Driving in “S” mode

You can change the shift range position in the “S” mode. The shift range position can be switched between “6” (sixth range) and “1” (first range) by moving the selector lever up to the “+” side or down to the “–” side. When the selector lever is shifted to the “S” position, the initial shift range position is “4” (fourth range) or “5” (fifth range) depending on the vehicle speed.

However, if the selector lever is shifted to the “S” position when AI shifting control is being performed, the initial shift range position may be “3” (third range). This is because the suitable shift range is selected depending on the driving condition.

The “S” mode indicator light and the current shift range position are shown on the instrument cluster.

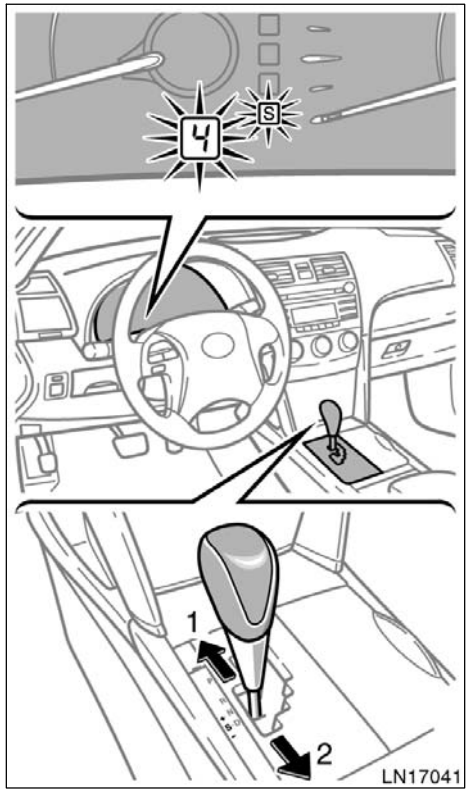

1: Upshift range
2: Downshift range

Shift range positions

- **“6” (Sixth range):**
  The most suitable gear is selected automatically between first and overdrive (sixth) gears according to the vehicle speed or driving conditions.
- **“5” (fifth range):**
  The most suitable gear is selected automatically between first and fifth gears according to vehicle speed or driving conditions. This range is suitable for acceleration such as when you want to pass a vehicle running ahead of you during high speed driving.
- **“4” (Fourth range):**
  The most suitable gear is selected automatically between first and fourth gears according to the vehicle speed or driving conditions. Slight engine braking will be obtained on a downhill road. Smooth running with less shifting will be obtained on an uphill road.
- **“3” (Third range):**
  The most suitable gear is selected automatically between first and third gears according to the vehicle speed or driving conditions. This range is to be used when stronger engine braking is necessary.
- **“2” (Second range):**
  First or second gear will be selected automatically according to the vehicle speed or driving conditions. This range is to be used when engine braking stronger than that of the “3” range position is necessary.
- **“1” (First range):**
  The gear is fixed in first regardless of vehicle speed or driving conditions. This range is to be used when maximum engine braking is necessary.

If you attempt to downshift the transmission when it is not possible to downshift due to high vehicle speed, a warning tone sounds twice.

Maximum allowable speeds

To get on a highway or to pass slower traffic, maximum acceleration may be necessary. Make sure you observe the following maximum allowable speeds in each range:

range	km/h (mph)
1	60 (37)
2	104 (65)
3	139 (86)
4	198 (123)

NOTICE

Do not downshift if you are going faster than the maximum allowable speed for the next lower range.

When the “S” mode indicator light does not come on even with the selector lever moved to the sequential position, there may be a problem somewhere in the system. Have your vehicle checked/repaired by your Toyota dealer as soon as possible. In this case, you can drive in the same condition as in the “D” position.

(d) Using engine braking

To use engine braking, you can downshift the transmission as follows:

- When driving in the “D” position—
  Shift the selector lever to the “S” position.

  When driving in the “6” range within the “S” position—
  Move the selector lever down to the “–” side to select the “5” range.

  The transmission will downshift to fifth range and engine braking will be enabled.

  Vehicles with cruise control—when the cruise control is being used, even if you downshift the transmission, engine braking will not be enabled because the cruise control is not cancelled.

  For ways to decrease the vehicle speed, see “Cruise control” on page 181 in this Section.

- Move the selector lever down to the “–” side to select the “4” range. The transmission will downshift to fourth range when the vehicle speed drops down to or lower than 169 km/h (105 mph), and stronger engine braking will be enabled.

  Vehicles with cruise control—when the cruise control is being used, even if you downshift the transmission, engine braking will not be enabled because the cruise control is not cancelled.

- Move the selector lever down to the “–” side to select the “3” range. The transmission will downshift to third range when the vehicle speed drops down to or lower than 121 km/h (75 mph), and more powerful engine braking than that of the “4” range position will be enabled.

- Move the selector lever down to the “–” side to select the “2” range. The transmission will downshift to second range when the vehicle speed drops down to or lower than 87 km/h (54 mph), and more powerful engine braking will be enabled.

- Move the selector lever down to the “–” side to select the “1” range. The downshift to first range when the vehicle speed drops down to or lower than 38 km/h (24 mph), and maximum engine braking will be enabled.

⚠ CAUTION

Be careful when downshifting on a slippery surface. Abrupt shifting could cause the vehicle to skid or spin.

(e) Backing up

1. Bring the vehicle to a complete stop.
2. With the brake pedal held down with your foot, shift the selector lever to the “R” position.

NOTICE

Never shift into reverse while the vehicle is moving.

(f) Parking

1. Bring the vehicle to a complete stop.
2. With the brake pedal pressed down, fully depress the parking brake pedal to apply the parking brake securely.
3. With the brake pedal pressed down, shift the selector lever to the “P” position.

⚠ CAUTION

Never attempt to move the selector lever into “P” position under any circumstances while the vehicle is moving. Serious mechanical damage and loss of vehicle control may result.

(g) Good driving practice

- If the transmission repeatedly shifts up and down between third gear and overdrive when climbing a gentle slope, shift the selector lever into sequential position.
- When towing a trailer, in order to maintain engine braking efficiency, do not use overdrive.

⚠ CAUTION

Always keep your foot on the brake pedal while stopped with the engine running. This prevents the vehicle from creeping.

NOTICE

Always use the brake pedal or the parking brake to hold the vehicle on an upgrade. Do not attempt to hold the vehicle using the accelerator pedal, as this can cause the transmission to overheat.

(h) If you cannot shift the selector lever out of “P” position

If you cannot shift the selector lever from the “P” position even though the brake pedal is depressed, use the shift lock override button. For instructions, see “If you cannot shift automatic transmission selector lever” on page 355 in Section 4.

Manual transmission

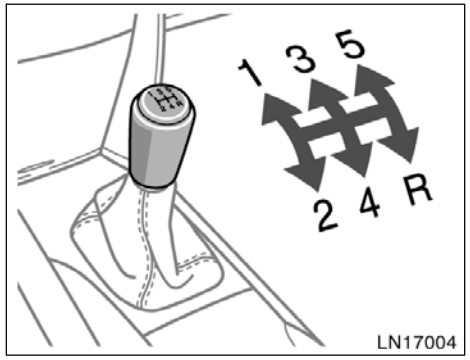

The shift pattern is conventional as shown above.

Press the clutch pedal down fully while shifting, and then release it slowly. Do not rest your foot on the pedal while driving, because it will cause clutch trouble. Do not use the clutch to hold the vehicle when stopped on an uphill grade—use the parking brake.

Recommended shifting speeds

The transmission is fully synchronized and upshifting or downshifting is easy.

For the best compromise between fuel economy and vehicle performance, you should upshift or downshift at the following speeds:

gear	km/h (mph)
1 to 2 or 2 to 1	24 (15)
2 to 3 or 3 to 2	40 (25)
3 to 4 or 4 to 3	64 (40)
4 to 5 or 5 to 4	72 (45)

Downshift to the appropriate gear if acceleration is needed when you are cruising below the above downshifting speeds.

Upshifting too soon or downshifting too late will cause lugging, and possibly pinging. Regularly revving the engine to maximum speed in each gear will cause excessive engine wear and high fuel consumption.

Maximum allowable speeds

To get on a highway or to pass slower traffic, maximum acceleration may be necessary. Make sure you observe the following maximum allowable speeds in each gear:

gear	km/h (mph)
1	54 (33)
2	95 (59)
3	146 (90)
4	200 (124)

NOTICE

Do not downshift if you are going faster than the maximum allowable speed for the next lower gear.

Good driving practice

- If it is difficult to shift into reverse, put the transmission in neutral, release the clutch pedal momentarily, and then try again.
- When towing a trailer, in order to maintain engine braking efficiency, do not use fifth gear.

CAUTION

Be careful when downshifting on a slippery surface. Abrupt shifting could cause the vehicle to skid or spin.

NOTICE

- ***Do not use any gears other than first gear when starting off and moving forward. Doing so may damage the clutch.***
- ***Make sure the vehicle is completely stopped before shifting into reverse.***

Traction control system

The traction control system automatically helps prevent the spinning of front wheels when the vehicle is started or accelerated on slippery road surfaces.

When the ignition switch is set at ON, the system automatically turns on.

CAUTION

Under certain slippery road conditions, full traction of the vehicle and power against front wheels cannot be maintained, even though the traction control system is in operation. Do not drive the vehicle under any speed or maneuvering conditions which may cause the vehicle to lose traction control. In situations where the road surface is covered with ice or snow, your vehicle should be fitted with snow tires or tire chains. Always drive at an appropriate and cautious speed for the present road conditions.

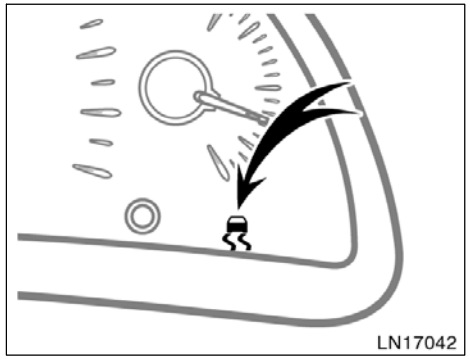

NORMAL DRIVING MODE

You may hear a sound in the engine compartment for a few seconds when the engine is started or just after the vehicle begins to move. This means that the traction control system is in the self–check mode, but does not indicate a malfunction.

When the traction control system is operating, the following conditions occur:

- The system controls the spinning of the front wheels. At this time, the slip indicator light blinks.
- You may feel vibration or noise in your vehicle, caused by operation of the brakes. This indicates the system is functioning properly.

The slip indicator light comes on for a few seconds when the ignition switch is set at ON. If the indicator light does not come on when the ignition is turned on, contact your Toyota dealer.

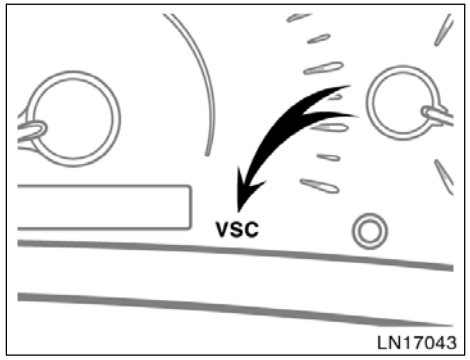

Without multi–information display

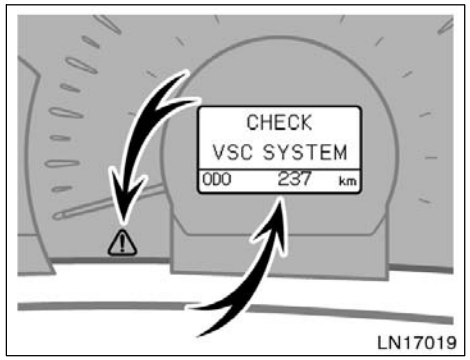

With multi–information display

SYSTEM FAILURE WARNING

The “VSC” warning light or the “CHECK VSC SYSTEM” message and master warning light warns that there is a problem somewhere in the vehicle stability control system or the traction control system.

The “VSC” warning light or master warning light will come on when the ignition switch is set at ON and will go off after a few seconds.

If the system failure warning comes on while driving, the system does not work. However, as conventional braking operates when applied, there is no problem to continue your driving.

With multi–information display—A buzzer also sounds when the message and master warning light come on.

In the following cases, contact your Toyota dealer:

Without multi–information display—

- The warning light does not come on after the ignition switch is set at ON.
- The warning light remains on after the ignition switch is set at ON.
- The warning light comes on while driving.

With multi–information display—

- The message and master warning light come on after ignition switch is set at ON.
- The message and master warning light come on while driving.

Vehicle stability control system

The vehicle stability control system helps provide integrated control of the systems such as anti–lock brake system, traction control, engine control, etc. This system automatically controls the brakes and engine to help prevent the vehicle from skidding when cornering on a slippery road surface or operating steering wheel abruptly.

This system will activate when your vehicle speed reaches or exceeds 15 km/h (9 mph), and will deactivate when the vehicle speed reduces to below 15 km/h (9 mph).

You may hear a sound in the engine compartment for a few seconds when the engine is started or just after the vehicle begins to move. This means that the system is in the self–check mode, but does not indicate a malfunction.

⚠ CAUTION

- **Do not rely excessively on the vehicle stability control system. Even if the vehicle stability control system is operating, you must always drive carefully and attentively to avoid serious injury. Reckless driving will result in an unexpected accident. If the slip indicator light flashes, an alarm sounds, and special care should be taken while driving.**
- **Only use tires of specified size. The size, manufacture, brand and tread pattern for all 4 tires should be the same. If you use the tires other than specified, or different type or size, the vehicle stability control system may not function correctly. When replacing the tires or wheels, contact your Toyota dealer. (See “Checking and replacing tires” on page 388 in Section 7–2.)**
- **In situations where the road surface is covered with ice or snow, your vehicle should be fitted with snow tires or tire chains.**

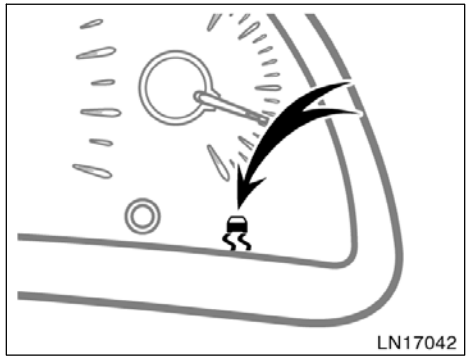

If the vehicle is going to skid during driving, the slip indicator light blinks and an alarm sounds intermittently. Special care should be taken while driving.

The slip indicator light comes on for a few seconds when the ignition switch is set at ON. If the indicator light does not come on when the ignition is turned on, contact your Toyota dealer.

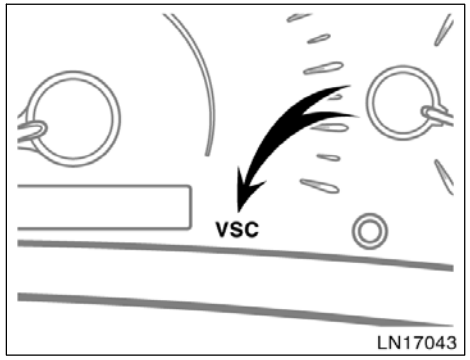

Without multi–information display

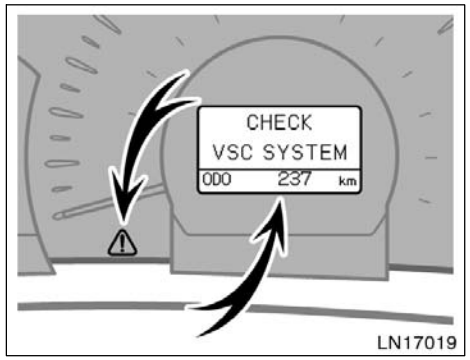

With multi–information display

SYSTEM FAILURE WARNING

The “VSC” warning light or the “CHECK VSC SYSTEM” message and master warning light warns that there is a problem somewhere in the vehicle stability control system or the traction control system.

The “VSC” warning light or master warning light will come on when the ignition switch is set at ON and will go off after a few seconds.

If the system failure warning comes on while driving, the system does not work. However, as conventional braking operates when applied, there is no problem to continue your driving.

With multi–information display—A buzzer also sounds when the message and master warning light come on.

In the following cases, contact your Toyota dealer:

Without multi–information display—

- The warning light does not come on after the ignition switch is set at ON.
- The warning light remains on after the ignition switch is set at ON.
- The warning light comes on while driving.

With multi–information display—

- The message and master warning light come on after ignition switch is set at ON.
- The message and master warning light come on while driving.

Tire pressure warning system

The tire pressure warning system warns you that the tire inflation pressure is low.

The tire pressure warning system is not a substitute for checking normal tire inflation pressure. Check the tire inflation pressure with a tire pressure gauge regularly.

CAUTION

The warning system may not activate immediately if bursts or sudden air leakage should occur.

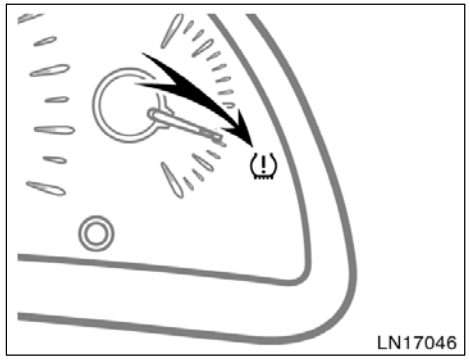

The tire pressure warning light comes on when the ignition switch is set at ON and goes off after a few seconds. This means the tire pressure warning system is operating properly. If the tire inflation pressure becomes low, the light comes on again. In this case, adjusting the tire inflation pressure will turn off the light after a few minutes. If the light comes on after blinking for 1 minute, the tire pressure warning system is not working properly.

Indicator status	Meanings	Do this
ON	Tire inflation pressure is low	Adjust the tire inflation pressure
ON after blinking for 1 minute	Tire pressure warning system malfunction	Have the system checked at your Toyota dealer

⚠ CAUTION

If the tire pressure warning light comes on, be sure to observe the following precautions. Failure to do so could cause loss of vehicle control and result in death or serious injury.

- **Stop your vehicle in a safe place as soon as possible. Adjust the tire inflation pressure immediately.**
- **If the tire pressure warning light comes on even after tire inflation pressure adjustment, it is probable that you have a flat tire. Check the tires. If the tire is flat, change to the spare tire and have the flat tire repaired by the nearest Toyota dealer.**
- **Avoid abrupt maneuvering and braking. If the vehicle tires deteriorate, you could lose control of the steering wheel or the brakes.**

The tire pressure warning light may turn on due to natural causes such as natural air leaks or tire inflation pressure changes caused by temperature. In this case, adjusting the tire inflation pressure will turn off the light.

Pushing the tire pressure warning reset switch should not turn off the tire pressure warning light. Adjusting the tire inflation pressure will turn off the light.

The spare tire (except compact spare tire) is also equipped with the tire pressure warning valve and transmitter. The tire pressure warning light will turn on if the tire inflation pressure of the spare tire is low. If a tire goes flat, even though the flat tire is replaced with the spare tire, the warning light does not turn off. Replace the spare tire with the repaired tire and adjust the proper tire inflation pressure. The tire pressure warning light will turn off after a few minutes.

The compact spare tire is not equipped with the tire pressure warning valve and transmitter. If a tire goes flat, the warning light will not turn off even though the flat tire is replaced with the spare tire. Replace the spare tire with the repaired tire and adjust the proper tire inflation pressure. The tire pressure warning light will turn off after a few minutes.

ZIN004

CAUTION

Each tire, including the spare (if provided), should be checked monthly when cold and inflated to the inflation pressure recommended by the vehicle manufacturer on the vehicle placard or tire inflation pressure label (tire and load information label). (If your vehicle has tires of a different size than the size indicated on the vehicle placard or tire inflation pressure label (tire and load information label), you should determine the proper tire inflation pressure for those tires.)

As an added safety feature, your vehicle has been equipped with a tire pressure monitoring system (TPMS–tire pressure warning system) that illuminates a low tire pressure telltale (low tire pressure warning light) when one or more of your tires is significantly under–inflated. Accordingly, when the low tire pressure telltale (low tire pressure warning light) illuminates, you should stop and check your tires as soon as possible, and inflate them to the proper pressure. Driving on a significantly under–inflated tire causes the tire to overheat and can lead to tire failure. Under–inflation also reduces fuel efficiency and tire tread life, and may affect the vehicle’s handling and stopping ability.

Please note that the TPMS (tire pressure warning system) is not a substitute for proper tire maintenance, and it is the driver’s responsibility to maintain correct tire pressure, even if under–inflation has not reached the level to trigger illumination of the TPMS low tire pressure telltale (low tire pressure warning light).

NOTICE

- ***Do not use liquid sealants for a flat tire as tire pressure warning valve and transmitter will be damaged.***
- ***When the tires must be repaired or replaced, have them repaired or replaced by the nearest Toyota dealer or authorized tire dealer. The tire pressure warning valves and transmitters will be affected by the installation or removal of tires.***

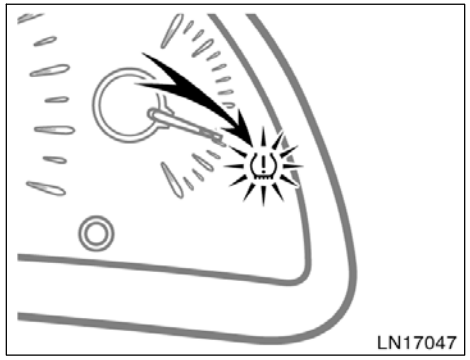

IF THE TIRE PRESSURE WARNING LIGHT COMES ON AFTER BLINKING FOR 1 MINUTE...

If the tire pressure warning light comes on after blinking for 1 minute when the ignition switch is set at ON, the tire pressure warning system is not working properly.

The system will be disabled in the following conditions:
(When the condition becomes normal, the system will work properly.)

- If tires not equipped with tire pressure warning valves and transmitters are used.
- If the ID code on the tire pressure warning valves and transmitters is not registered.
- If electronic devices or facilities using similar radio wave frequencies are nearby.
- If a radio set at similar frequencies is in use in the vehicle.
- If a window tint that affects the radio wave signals is installed.
- If there is a lot of snow or ice on the vehicle, in particular around the wheels or wheel housings.
- If non–genuine Toyota wheels are used.
- If a special set of tires is used.
- If tire chains are used.
- If the spare tire (except compact spare tire) is in a location subject to poor radio wave signal reception.
- If the tire inflation pressure is more than 500 kPa (5 kgf/cm^2 or bar, 70 psi) or more higher than the specified level.

If the tire pressure warning light comes on after blinking for 1 minute frequently when the ignition switch is set at ON, have the system checked by your Toyota dealer.

Pushing the tire pressure warning reset switch should not turn off the tire pressure warning light.

Even if you use genuine wheels, the tire pressure warning system may not work properly with some types of tires.

For vehicles sold in U.S.A.

This device complies with Part 15 of the FCC Rules. Operation is subject to the following two conditions: (1) This device may not cause harmful interference, and (2) this device must accept any interference received, including interference that may cause undesired operation.

NOTICE:
This equipment has been tested and found to comply with the limits for a Class B digital device, pursuant to Part 15 of the FCC Rules. These limits are designed to provide reasonable protection against harmful interference in a residential installation. This equipment generates, uses and can radiate radio frequency energy and, if not installed and used in accordance with the instructions, may cause harmful interference to radio communications. However, there is no guarantee that interference will not occur in a particular installation. If this equipment does cause harmful interference to radio or television reception, which can be determined by turning the equipment off and on, the user is encouraged to try to correct the interference by one or more of the following measures:

–Reorient or relocate the receiving antenna.

–Increase the separation between the equipment and receiver.

–Connect the equipment into an outlet on a circuit different from that to which the receiver is connected.

–Consult the dealer or an experienced radio/TV technician for help.

FCC WARNING:
Changes or modifications not expressly approved by the party responsible for compliance could void the user’s authority to operate the equipment.

For vehicles sold in Canada

Operation is subject to the following two conditions: (1) this device may not cause interference, and (2) this device must accept any interference, including interference that may cause undesired operation of the device.

REPLACING TIRES AND WHEELS

When replacing the tires and wheels, be sure to install tire pressure warning valves and transmitters. ID codes on the tire pressure warning valves and transmitters are registered on the tire pressure warning ECU. When replacing a tire pressure warning valve and transmitter, it is necessary to register the ID code of tire pressure warning valve and transmitter. Have the ID code registered by your Toyota dealer.

NOTICE

When the tires or tire pressure warning valves and transmitters must be replaced, have them replaced by your Toyota dealer. The tire pressure warning valves and transmitters will be affected by the installation or removal of tires.

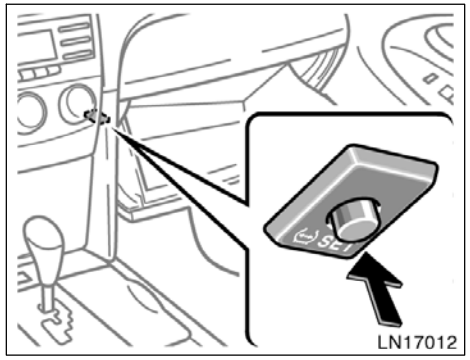

TIRE PRESSURE WARNING RESET SWITCH

When initializing the system, the present tire inflation pressure is stored as standard. The tire pressure warning system determines decreased air pressure by comparing the present and the standard tire inflation pressures. When you change the set tire inflation pressure, it is necessary to initialize the tire pressure warning system.

- When changing the tire size.

To initialize the system, perform the following:

1. Park the vehicle in a safe place and turn the ignition switch off.
2. Adjust the pressure of all the installed tires to the specified cold tire inflation pressure level. (See “Tires” on page 411 in Section 8.)
3. Set the ignition switch to ON.
4. Open the glove box, and push and hold the tire pressure warning reset switch until the tire pressure warning light blinks slowly three times.
5. Leave for a few minutes with the ignition switch ON, and then turn the ignition switch off.

If you push the tire pressure reset switch while vehicle is moving, initialization is not performed.

If you push the tire pressure reset switch accidentally and initialization is performed, adjust the tire inflation pressure to the specified level and initialize the system again.

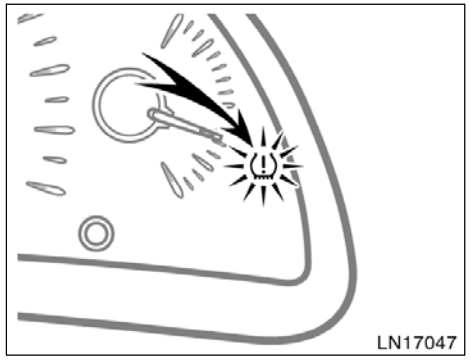

If the tire pressure warning light does not blink slowly three times when you push and hold the reset switch, initialization has failed and the tire pressure warning system may not work properly. In this case, initialize the system again. If initialization cannot be performed, have the system checked at your Toyota dealer.

CAUTION

Do not push the reset switch without adjusting the tire inflation pressure to the specified level. Otherwise, the tire pressure warning light may not come on even if the tire inflation pressure is low, or it may come on when the tire inflation pressure is actually normal.

Parking brake

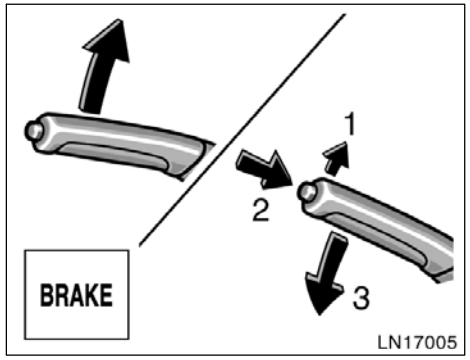

Lever type (type A)

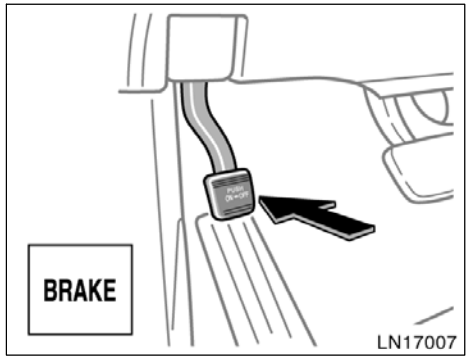

Pedal type (type A)

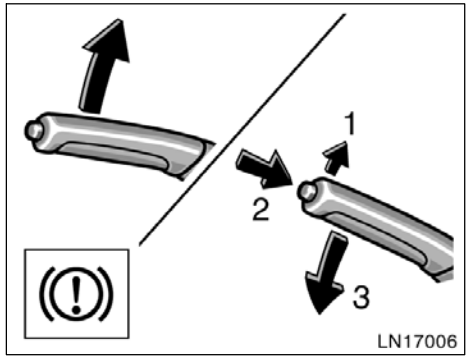

Lever type (type B)

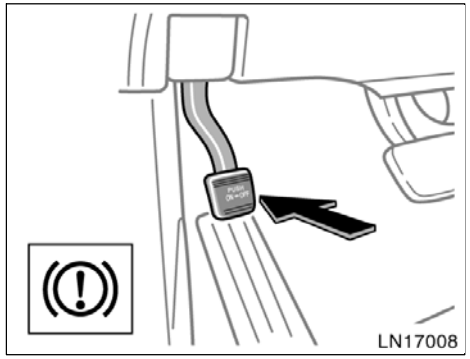

Pedal type (type B)

When parking, firmly apply the parking brake to avoid inadvertent creeping.

Lever type—

To set: Pull up the lever. For better holding power, first depress the brake pedal and hold it while setting the parking brake.
To release: Pull up the lever slightly (1), press the lock release button (2), and lower (3).

Pedal type—

To set: Fully depress the parking brake pedal. For better holding power, first depress the brake pedal and hold it while setting the parking brake.
To release: Depress the parking brake pedal while depressing the brake pedal.

To remind you that the parking brake is set, the parking brake reminder light in the instrument panel remains on until you release the parking brake.

⚠ CAUTION

Before driving, be sure the parking brake is fully released and the parking brake reminder light is off.

Cruise control

The cruise control is designed to maintain a set cruising speed without requiring the driver to operate the accelerator. Cruising speed can be set to any speed above 40 km/h (25 mph).

Within the limits of the engine’s capabilities, cruising speed can be maintained up or down grades. However, changes in vehicle speed may occur on steeper grades.

⚠ CAUTION

- **To help maintain maximum control of your vehicle, do not use the cruise control when driving in heavy or varying traffic, or on slippery (rainy, icy or snow–covered) or winding roads.**
- **Avoid vehicle speed increases when driving downhill. If the vehicle speed is too fast in relation to the cruise control set speed, cancel the cruise control then downshift the transmission to use engine braking to slow down.**

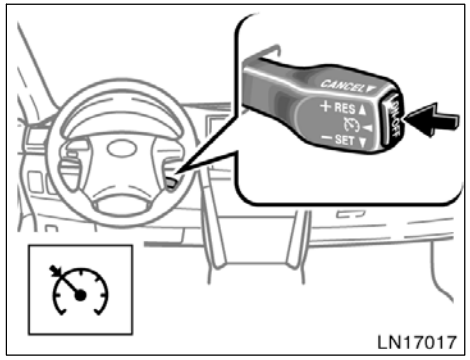

TURNING THE SYSTEM ON AND OFF

To turn the cruise control on, press the “ON–OFF” button. The cruise control indicator light on the instrument panel will come on to indicate that the cruise control is operational. Pressing the “ON–OFF” button again turns the system off.

When the system is turned off, cruising speed must be reset when the cruise control is turned on again.

⚠ CAUTION

To avoid accidentally engaging the cruise control, turn the system off when it is not in use. Make sure the cruise control indicator light is off.

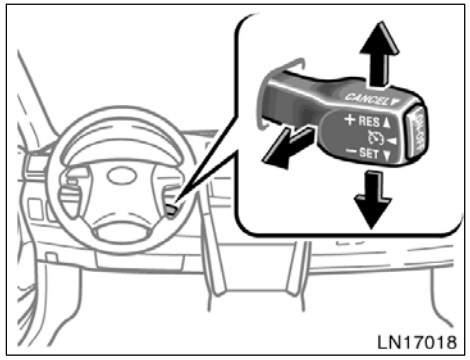

SETTING THE CRUISING SPEED

Automatic transmission models—The transmission must be in “D” or “4” position (2.4 L 4–cylinder [2AZ–FE] engine), or “D” position or between “4” (fourth range) and “6” (sixth range) in “S” position (3.5 L V6 [2GR–FE] engine) before you set the cruising speed.

Bring your vehicle to the desired speed, push the lever down in the “– SET” direction and release it. This sets the vehicle at that speed. If the speed is not satisfactory, tap the lever up for a faster speed, or tap it down for a slower speed. Each tap changes the set speed by 1.6 km/h (1.0 mph). You can now take your foot off the accelerator pedal.

If you need acceleration—for example, when passing—depress the accelerator pedal enough for the vehicle to exceed the set speed. When you release it, the vehicle will return to the speed set prior to the acceleration.

⚠ CAUTION

For manual transmission:
While driving with the cruise control on, do not shift to neutral without depressing the clutch pedal, as this may cause engine racing or overreving.

CANCELLING THE CRUISE CONTROL

The cruise control may be temporarily cancelled by the driver or by the system itself under certain circumstances. Temporary cancellation allows the set cruising speed to remain in memory.

The cruise control can be temporarily cancelled by doing the following:

- Pulling the lever in the “CANCEL” direction and releasing it
- Depressing the brake pedal
- Depressing the clutch pedal (manual transmission)

Under certain circumstances, the cruise control is temporarily cancelled:

- When vehicle speed falls below 40 km/h (25 mph)
- When vehicle stability control is activated

When vehicle speed drops 16 km/h (10 mph) below the set speed, the cruise control is cancelled and the set speed is erased from memory.

The cruise control indicator light remains on to indicate that the system is still in operation.

To turn the cruise control off, press the “ON–OFF” button. Make sure the cruise control indicator light is off.

If the cruise control automatically cancels out other than for the above cases, have your vehicle checked by your Toyota dealer at the earliest opportunity.

RESUMING THE CRUISE CONTROL

If the cruise control is temporarily cancelled, the cruising speed can be resumed by pushing the lever up in the “+ RES” direction.

Vehicle speed must be above 40 km/h (25 mph).

RESETTING TO A FASTER SPEED

Push the lever up in the “+ RES” direction and hold it. Release the lever when the desired speed is attained. While the lever is held up, the vehicle will gradually gain speed.

However, a faster way to reset is to accelerate the vehicle and then push the lever down in the “– SET” direction.

RESETTING TO A SLOWER SPEED

Push the lever down in the “– SET” direction and hold it. Release the lever when the desired speed is attained. While the lever is held down, the vehicle speed will gradually decrease.

However, a faster way to reset is to depress the brake pedal and then push the lever down in the “– SET” direction.

Automatic transmission models—Even if you downshift from the “D” to “4” or “D” to “S” with the cruise control on, engine braking will not be applied because the cruise control is not cancelled. To decrease the vehicle speed, reset to a slower speed with the cruise control lever or depress the brake pedal. If you use the brake pedal, cruise control is cancelled.

CRUISE CONTROL FAILURE WARNING

If the cruise control indicator light flashes when using the cruise control, press the “ON–OFF” button to turn the system off and then press it again to turn it on.

If any of the following conditions then occurs, there is some trouble in the cruise control system.

- The indicator light does not come on.
- The indicator light flashes again.
- The indicator light goes out after it comes on.

If this is the case, contact your Toyota dealer and have your vehicle inspected.

SECTION 1 – 8

OPERATION OF INSTRUMENTS AND CONTROLS

Audio and hands–free phone systems

Reference 186
Using your audio system 186
Audio remote controls 206
AUX adapter 207
Audio system operating hints 208
Hands–free phone system 215

For vehicle equipped with Navigation system, please refer to the separate “Navigation System Owner’s Manual”.

Reference

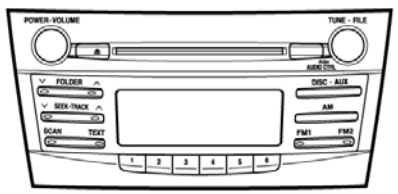

LN18036

Type 1: AM·FM radio/compact disc player (with compact disc changer controller)

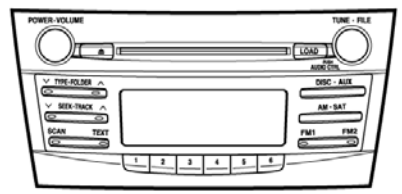

LN18037

Type 2: AM·FM radio/compact disc player with changer (with XM satellite radio* controller)

*: Use of satellite radio requires XM tuner and service. Contact your Toyota dealer for details.

Using your audio system——Some basics

This section describes some of the basic features on Toyota audio systems. Some information may not pertain to your system.

Your audio system works when the ignition switch is set at ACC or ON.

TURNING THE SYSTEM ON AND OFF

Push “POWER·VOLUME” to turn the audio system on and off.

Push “AM”, “FM1”, “FM2”, “AM·SAT”* or “DISC·AUX” to turn on that function without pushing “POWER·VOLUME”.

You can turn on the compact disc player by inserting a compact disc.

You can turn off the compact disc player by ejecting the compact disc. If the audio system was previously off, then the entire audio system will be turned off when you eject the compact disc. If the radio was previously on, it will come on again.

*: Use of satellite radio requires XM tuner and service. Contact your Toyota dealer for details.

SWITCHING BETWEEN FUNCTIONS

Push “AM”, “FM1”, “FM2”, “AM·SAT”* or “DISC·AUX” if the system is already on but you want to switch from one function to other.

*: Use of satellite radio requires XM tuner and service. Contact your Toyota dealer for details.

LISTENING TO THE XM SATELLITE RADIO BROADCAST* (type 2)

To listen to a satellite radio broadcast in your vehicle, an additional genuine Toyota satellite receiver and antenna (or equivalents) must be purchased and installed. A subscription to the XM satellite radio service is also necessary.

How to subscribe to an XM satellite radio

An XM satellite radio is a tuner designed exclusively to receive broadcasts provided under a separate subscription. Availability is limited to the 48 contiguous states.

How to subscribe:
You must enter into a separate service agreement with the XM radio in order to receive satellite broadcast programming in the vehicle. Additional activation and service subscription fees apply that are not included in the purchase price of the vehicle and optional digital satellite tuner. For complete information on subscription rates and terms, or to subscribe to the XM radio, visit XM on the web at www.xmradio.com or call an XM’s Listener Care at (800) 967–2346. The XM radio is solely responsible for the quality, availability and content of the satellite radio services provided, which are subject to the terms and conditions of the XM radio customer service agreement.

Customers should have their radio ID ready; the radio ID can be found by tuning to “channel 000” on the radio. For details, see “Displaying the radio ID” below.

All fees and programming are the responsibility of the XM satellite radio and are subject to change.

Satellite tuner technology notice:
Toyota’s satellite radio tuners are awarded Type Approval Certificates from XM Satellite Radio Inc. as proof of compatibility with the services offered by the XM satellite radio.

Displaying the radio ID

Each XM tuner is identified with a unique radio ID. You will need the radio ID when activating XM service or when reporting a problem.

If you select the “CH 000” using the “TUNE·FILE” knob, the ID code of 8 alphanumeric characters appears. If you select another channel, display of the ID code is canceled. The channel (000) alternates the display between the radio ID and the specific radio ID code.

*: Use of satellite radio requires XM tuner and service. Contact your Toyota dealer for details.

TONE AND BALANCE

For details about your system’s tone and balance controls, see the description of your own system.

SRS (●)® (type 1 only)

The audio systems utilize SRS FOCUS® and SRS TruBass® audio enhancement technologies, under license from SRS Labs, Inc., in all mode except AM radio mode.

FOCUS, TruBass, SRS and (●) symbol are trademarks of SRS Labs, Inc.
FOCUS and TruBass technologies are incorporated under license from SRS Labs, Inc.

Tone

How good an audio program sounds to you is largely determined by the mix of the treble, midrange (type 2 only), and bass levels. In fact, different kinds of music and vocal programs usually sound better with different mixes of treble, midrange and bass.

You can adjust sound characteristics. Different sound characteristics can be recorded for each audio source.

Balance

A good balance of the left and right stereo channels and of the front and rear sound levels is also important.

Keep in mind that if you are listening to a stereo recording or broadcast, changing the right/left balance will increase the volume of one group of sounds while decreasing the volume of other.

YOUR RADIO ANTENNA

Your vehicle has an antenna printed on the inside of the rear window.

NOTICE

Putting a film (especially a conductive or metallic film) on the rear window will noticeably reduce the sensitivity of the radio.

YOUR COMPACT DISC PLAYER (type 1)

When you insert a disc, gently push it in with the label side up. The compact disc player will play from track 1 through to the end of the disc. Then it will play from track 1 again.

NOTICE

Never try to disassemble or oil any part of the compact disc player. Do not insert anything other than compact discs into the slot.

8 cm (3 in.) compact disc singles

Your compact disc player does not need an adaptor to play compact disc singles. Compact disc singles are about 8 cm (3 in.) in diameter–smaller than standard discs.

NOTICE

Do not use an adaptor for compact disc singles—it could cause tracking errors or interfere with the ejection of compact discs.

YOUR COMPACT DISC PLAYER WITH CHANGER (type 2)

When you insert a disc, push the “LOAD” button and gently push the disc in with the label side up. This compact disc player can store up to six discs. The player will play from track 1 through to the end of the disc. Then it will play from track 1 of the next disc.

The player is intended for use with 12 cm (4.7 in.) discs only.

NOTICE

- ***Do not stack up two discs for insertion, or it will cause damage to the compact disc player. Insert only one compact disc into slot at a time.***
- ***Never try to disassemble or oil any part of the compact disc player. Do not insert anything other than compact discs into the slot.***

—Controls and features

▶Type 1

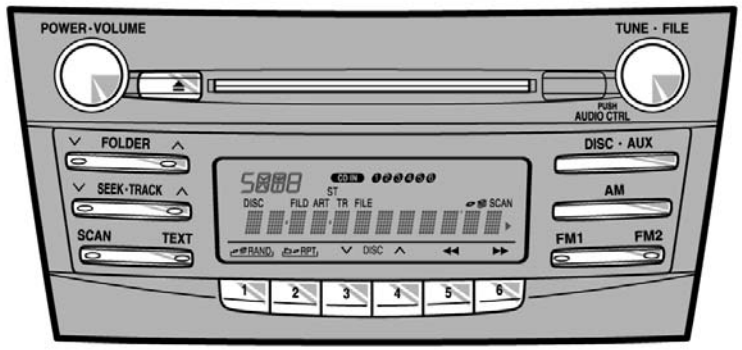

LN18047y

Details of specific buttons, controls and features are described in the alphabetical list that follows.

1 2 3 4 5 6 (Preset buttons)

These buttons are used to preset and tune in radio stations.

To preset a station to a button: Tune in the desired station. (See “TUNE·FILE” or “SEEK·TRACK”.) Push and hold down the button until you hear a beep—this will set the station to the button. The preset button number will appear on the display.

To recall a preset station: Push the button for the station you want. The preset button number and station frequency will appear on the display.

These systems can store one AM and two FM stations for each button. (The display will show “AM”, “FM1” or “FM2” when you push “AM”, “FM1” or “FM2” button.)

⏏ (Eject button)

Push the compact disc eject button to eject a compact disc.

◀◀/▶▶ (Reverse/Fast forward button)

Push and hold “▶▶” (preset button 6) or “◀◀” (preset button 5) to fast forward or reverse within a compact disc. When you release the button, the player will resume playing.

AM

Push the “AM” button to turn on the radio and select the AM band. “AM” will appear on the display.

AUDIO CTRL (Tone and sound balance controls)

Each time you push the “AUDIO CTRL” knob, the mode changes. To adjust the tone and balance, turn the knob.

BAS: Adjusts low–pitched tones. The display ranges from –5 to 5.

TRE: Adjusts high–pitched tones. The display ranges from –5 to 5.

FAD: Adjusts the sound balance between the front and rear speakers. The display ranges from F7 to R7.

BAL: Adjusts the sound balance between the right and left speakers. The display ranges from L7 to R7.

Switching over the Speed Automatic Sound Levelizer (ASL) level

ASL: The Automatic Sound Levelizer can be turned on by turning the knob. In addition, turning the knob allows you to select from LOW, MID, and HIGH volume and tone settings. The ASL system automatically adjusts volume and tone in accordance with the driving speed.

DISC·AUX (Compact disc)

Push the “DISC·AUX” button to play a compact disc.

When the audio system is set to compact disc operation, the display shows the track number currently being played.

To switch between CD and AUX (external device) modes, press the “DISC·AUX” button. The AUX mode is only available when AUX adapter is connected to the system. When the AUX adapter is in use, “AUX” will appear on the display.

Error messages

If the player malfunctions, your audio system will display following error messages.

“WAIT”: The compact disc player unit may be too hot. Allow the player to cool down.

“ERROR 1”: The disc may be dirty, damaged or inserted incorrectly (up–side down). Clean the disc and re–insert it.

“NO DISC”: The compact disc changer of the separate unit is empty. Insert a disc.

“ERROR 3”: There is a problem inside the system.

“ERROR 4”: Over–current. Ask your Toyota dealer to inspect.

“CD OPEN”: The compact disc changer lid of the separate unit is open. Close the compact disc changer lid.

If “NO MUSIC” appears on the display, it indicates that a disc with no MP3/WMA data has been inserted. Remove the disc from the player and insert an MP3/WMA data disc.

If the malfunction still exists, take your vehicle to your Toyota dealer.

∨ DISC ∧

With compact disc changer only—

Use these buttons to select a disc you want to listen to.

Push “∨” (preset button 3) or “∧” (preset button 4) until the number of the disc you want to listen appears on the display.

FM1 FM2

Push the “FM1” or “FM2” button to turn on the radio and select the FM band. “FM1” or “FM2” will appear on the display. This system allows you to set twelve FM stations, two for each of the preset button.

FOLDER (Folder up/down)

To skip up or down to a different folder:
Push “∧” or “∨” side of the “FOLDER” several times until the number of the folder you want to listen to appears on the display.

To jump to the first file in the first folder:
Push and hold the “∨” side of the button until you hear a beep.

When playing a disc featuring both audio data (CD–DA) and MP3/WMA files, audio data (CD–DA) is played.

POWER·VOLUME (Power and Volume)

Push “POWER·VOLUME” to turn the audio system on and off. Turn “POWER·VOLUME” to adjust the volume.

RAND (Random)

Compact disc player

There are two random features—you can either listen to the tracks on one compact disc in random order, or listen to the tracks on all the compact discs in the magazine in random order.

To play the tracks on one disc in random order:
Quickly push and release “RAND” (preset button 1). “RAND” will appear on the display and the player will perform the tracks on the disc you are listening to in random order. To turn off the random feature, push this button again.

With compact disc changer only—

To play all the tracks in the magazine in random order:
Push and hold “RAND” (preset button 1) until you hear a beep. “RAND” will appear on the display and the player will perform all the tracks on all the discs in the magazine in random order. To turn off the random feature, push this button again.

MP3/WMA player

There are two random playback features—you can either listen to all of the files on the compact discs in random order. You can also listen to the files in a single folder in random order.

To randomly play the files in a folder:
Quickly push and release “RAND” (preset button 1). “RAND” will appear on the display.

To randomly play all of the files on the compact disc:
Push and hold “RAND” (preset button 1) until you hear a beep. “RAND” will appear on the display and the player will play all of the files on the disc in random order. To turn off the random playback feature, push this button again.

RPT (Repeat)

Compact disc player

There are two repeat features—you can either replay a disc track or a whole compact disc.

Repeating a track:
Quickly push and release “RPT” (preset button 2) while the track is playing. “RPT” will appear on the display. When the track ends, it will automatically replay. To turn off the repeat feature, push this button again.

With compact disc changer only—

Repeating a disc:
Push and hold “RPT” (preset button 2) until you hear a beep. “RPT” will appear on the display. The player will repeat all the tracks on the disc you are listening to. When the disc ends, the player will automatically go back to the first track on the disc and replay. To turn off the repeat feature, push this button again.

MP3/WMA player

There are two repeat features—you can repeat a signal file or an entire folder.

Repeating a file:
Quickly push and release “RPT” (preset button 2) while the file is playing. “RPT” will appear on the display. When the file ends, it will repeat automatically. This process will be continued until you push the button again to turn off the repeat feature.

Repeating a folder:
Push and hold “RPT” (preset button 2) until you hear a beep. “RPT” will appear on the display. The player will repeat all of the files in the folder. When the last file in the folder ends, the folder will repeat from the beginning. To turn off the repeat feature, push this button again.

SCAN

Radio

You can either scan all the frequencies on a band or scan only the preset stations for that band.

To scan the preset stations:
Push and hold the “SCAN” button until you hear a beep. The radio will tune in the next preset station up the band, stay there for 5 seconds, and then move to the next preset station. To stop scanning, push this button again.

To scan all the frequencies:
Quickly push and release the “SCAN” button. The radio will find the next station up the station band, stay there for 5 seconds, and then scan again to the next station. To stop scanning, push this button again.

Compact disc player

There are two scan features—you can either scan the tracks on a specific disc or scan the first tracks of all the discs in the magazine.

Scanning the tracks on a disc:
Quickly push and release the “SCAN” button. “SCAN” will appear on the display and the player will scan all the tracks on the disc you are listening to. To stop scanning, push this button again. If the player scanned all the tracks on the disc, it will stop scanning.

With compact disc changer only—

Scanning the first tracks of all the discs in the magazine:
Push the “SCAN” button until you hear a beep. “SCAN” will appear on the display and the player will scan the first track on the next disc. To stop scanning, push this button again. If the player has scanned all the discs, it will stop scanning.

MP3/WMA player

There are two scan features—you can either scan the files in a folder on a specific disc or scan the first file of all the folder.

Scanning the files on a folder:
Quickly push and release “SCAN”. “SCAN” will appear on the display and the player will scan all the files in the folder you are listening to. To select a file, push the “SCAN” again. After all the tracks on the disc have been scanned in one pass, normal play resumes.

Scanning the first file of all the folders:
Push “SCAN” until you hear a beep. “SCAN” will appear on the display and the player will scan the first file of the next folder. To select a folder, push the “SCAN” again. After all the folders have been scanned in one pass, normal play resumes.

SEEK·TRACK (Seeking/Tracking up/down)

Radio

In the seek mode, the radio finds and plays the next station up or down the station band.

To seek the next station, quickly push and release “∧” or “∨” side of the “SEEK·TRACK” button. Do this again to find the station after that.

Compact disc player

Use this button to skip up or down to a different track.

Push “∧” or “∨” side of the “SEEK·TRACK” button until the number of the track you want to listen to appears on the display. If you want to return to the beginning of the current track, quickly push the “∨” side of the button one time.

MP3/WMA player

Use this button to file up or down to a different file.

Push “∧” or “∨” side of the “SEEK·TRACK” several times until the file you want to listen to appears on the display. If you want to return to the beginning of the current file, push the “∨” side of the button one time.

ST (Stereo reception) display

Your radio automatically changes to stereo reception when a stereo broadcast is received. “ST” appears on the display. If the signal becomes weak, the radio reduces the amount of channel separation to prevent the weak signal from creating noise. If the signal becomes extremely weak, the radio switches from stereo to mono reception.

TEXT

Compact disc player

This button is used to change the display for the compact disc that contains text data.

To change the display, quickly push and release the “TEXT” button while the compact disc is playing. The display changes in the order from the elapsed time to disc title to track title, then back to the elapsed time.

If this button is pushed while a compact disc that does not contain text data is playing, “NO TITLE” will appear on the display.

If the entire disc or track title does not appear on the display, push and hold the button until you hear a beep. The rest of the title will appear.

MP3/WMA player

This button is used to change the display for the MP3/WMA file that contains text data.

To change the display, quickly push and release the “TEXT” button while the MP3/WMA file is playing. The display changes in the order from the elapsed time to folder name to file name to album title to track title to artist name, then back to the elapsed time.

If this button is pushed while an MP3/WMA file that does not contain text data is playing, “NO TITLE” will appear on the display.

If the entire text data is not displayed, push and hold it until you hear a beep. The rest of the text data will appear.

TUNE·FILE (Tuning and File up/down)

Radio

Turn the “TUNE·FILE” knob clockwise to step up the frequency. Turn the knob counterclockwise to step down the frequency.

MP3/WMA player

Turn the “TUNE·FILE” knob clockwise to file up. Turn the knob counterclockwise to file down.

▶Type 2

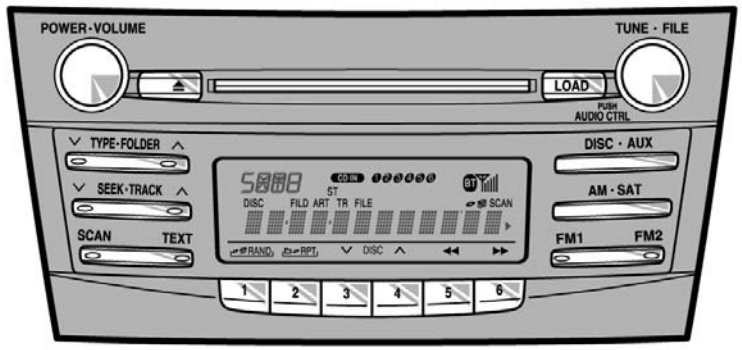

Details of specific buttons, controls and features are described in the alphabetical list that follows.

1 2 3 4 5 6 (Preset buttons)

These buttons are used to preset and tune in radio stations.

To preset a station to a button: Tune in the desired station. (See “TUNE·FILE” or “SEEK·TRACK”.) Push and hold down the button until you hear a beep—this will set the station to the button. The preset button number will appear on the display.

To recall a preset station: Push the button for the station you want. The preset button number and station frequency will appear on the display.

These systems can store one AM and two FM stations for each button. (The display will show “AM”, “FM1” or “FM2” when you push “AM·SAT”, “FM1” or “FM2” button.)

XM satellite radio*—

These buttons are used to preset and tune in radio channels.

To preset a channel to a button: Tune in the desired channel. (See “TUNE·FILE” or “SEEK·TRACK”.) Push and hold down the button until you hear a beep—this will set the channel to the button. The preset button number will appear on the display.

To recall a preset channel: Push the button for the channel you want. The preset button number and channel number will appear on the display.

This radio can store three XM channels for each button. (The display will show “SAT1”, “SAT2” or “SAT3” when you push “AM·SAT” button.)

*: Use of satellite radio requires XM tuner and service. Contact your Toyota dealer for details.

⏏ (Eject button)

This button is used to eject one or all compact discs.

To eject the current compact disc, push and release the compact disc eject button.

To eject a specific disc, push “∨” (preset button 3) or “∧” (preset button 4) until the number of the disc you want to eject is displayed. Push and release the eject button.

To eject all discs at a time, press and hold the eject button until you hear a beep. The last compact disc played before pushing the button will be ejected first. If the ejected disc is not removed for a long time, the eject function will be cancelled.

◀◀/▶▶ (Reverse/Fast forward button)

Push and hold “▶▶” (preset button 6) or “◀◀” (preset button 5) to fast forward or reverse within a compact disc. When you release the button, the player will resume playing.

AM·SAT (AM band and XM satellite radio*)

Push the “AM·SAT” button to turn on the radio and select the AM or XM band. “AM”, “SAT1”, “SAT2” or “SAT3” will appear on the display.

Error messages

If the satellite radio tuner malfunctions, your audio system will display following error messages.

“ANTENNA”:

- The XM antenna is not connected. Check whether the XM antenna cable is attached securely.
- A short–circuit occurs in the antenna or the surrounding antenna cable. See a Toyota certified dealer.

“UPDATING”:

- You have not subscribed to the XM satellite radio. The radio is being updated with the latest encryption code. Contact the XM satellite radio for subscription information. When a contact is canceled, you can choose the “CH000” and all free–to–air channels.
- The premium channel you selected is not authorized. Wait for about 2 seconds until the radio returns to the previous channel or “CH001”. If it does not change automatically, select another channel. If you want to listen to the premium channel, contact the XM satellite radio.

“NO SIGNAL”: The XM signal is too weak at the current location. Wait until your vehicle reaches a location with a stronger signal.

“LOADING”: The unit is acquiring audio or program information. Wait until the unit has received the information.

“OFF AIR”: The channel you selected is not broadcasting any programming. Select another channel.

“– – –”: The channel you selected is no longer available. Wait for about 2 seconds until the radio returns to the previous channel or “CH001”. If it does not change automatically, select another channel.

The XM Listener Care Center is also available on the phone, please call (800) 967–2346 during the following hours:
Monday—Saturday: 6 a.m.—2 a.m.
Sunday: 8 a.m.—8 p.m.

*: Use of satellite radio requires XM tuner and service. Contact your Toyota dealer for details.

AUDIO CTRL (Tone and sound balance controls)

Each time you push the “AUDIO CTRL” knob, the mode changes. To adjust the tone and balance, turn the knob.

BAS: Adjusts low–pitched tones. The display ranges from –5 to 5.

MID: Adjusts mid–pitched tones. The display ranges from –5 to 5.

TRE: Adjusts high–pitched tones. The display ranges from –5 to 5.

FAD: Adjusts the sound balance between the front and rear speakers. The display ranges from F7 to R7.

BAL: Adjusts the sound balance between the right and left speakers. The display ranges from L7 to R7.

Switching over the Speed Automatic Sound Levelizer (ASL) level

ASL: The ASL system automatically adjusts volume and tone in accordance with the driving speed.

The ASL system can be turned on or off. Pushing and holding the ”TUNE·FILE” knob shows the current status of the ASL system on the display. Turn the ”TUNE·FILE” knob to turn on or off the system.

DISC·AUX (Compact disc)

Push the “DISC·AUX” button to play a compact disc.

When the audio system is set to compact disc operation, the display shows the track, or track and disc number currently being played.

To switch between CD and AUX (external device) modes, press the “DISC·AUX” button. The AUX mode is only available when AUX adapter is connected to the system. When the AUX adapter is in use, “AUX” will appear on the display.

Error messages

If the player malfunctions, your audio system will display following error messages.

“WAIT”: The compact disc player unit may be too hot. Allow the player to cool down.

“ERROR 1”: The disc may be dirty, damaged or inserted incorrectly (up–side down). Clean the disc and re–insert it.

“NO DISC”: Eject the disc or magazine. Set the disc or magazine again.

“ERROR 3”: There is a problem inside the system.

“ERROR 4”: Over–current. Ask your Toyota dealer to inspect.

If “NO MUSIC” appears on the display, it indicates that a disc with no MP3/WMA data has been inserted. Remove the disc from the player and insert an MP3/WMA data disc.

If the malfunction still exists, take your vehicle to your Toyota dealer.

∨ DISC ∧

Use these buttons to select a disc you want to listen to.

Push “∨” (preset button 3) or “∧” (preset button 4) until the number of the disc you want to listen appears on the display.

FM1 FM2

Push the “FM1” or “FM2” button to turn on the radio and select the FM band. “FM1” or “FM2” will appear on the display. This system allows you to set twelve FM stations, two for each of the preset button.

TYPE·FOLDER (Type/Folder up/down)

Radio

XM satellite radio*—

When you push the “∨” or “∧” side of the “TYPE·FOLDER” button while receiving a XM channel, the current channel category appears on the display.

When the channel category appears, push either “∨” or “∧” side of the “TYPE·FOLDER” button to switch to the next or previous category.

*: Use of satellite radio requires XM tuner and service. Contact your Toyota dealer for details.

MP3/WMA player

To skip up or down to a different folder:
Push “∧” or “∨” side of the “TYPE·FOLDER” several times until the number of the folder you want to listen to appears on the display.

To jump to the first file in the first folder: Push and hold the “∨” side of the button until you hear a beep.

When playing a disc featuring both audio data (CD–DA) and MP3/WMA files, audio data (CD–DA) is played.

LOAD

This button is used to load the compact discs in the compact disc player. This player can store up to six discs.

To load one compact disc only, quickly push and release the button. When the indicators on both sides of the slot turn green, insert a compact disc. After the disc is loaded, the shutter of the slot will close.

If no compact disc is inserted, the shutter will close after 15 seconds.

To load multiple compact discs, push and hold the button (until you hear a beep when the audio system is on). When the indicators on both sides of the slot turn green, insert the first compact disc. After the disc is loaded, the shutter of the slot will close. After a few seconds, the shutter will automatically open again and the indicators will turn green so the next disc can be inserted. The same process can be applied for loading the rest of the discs. If the player is full of discs, “DISC FULL” will appear on the display.

If no compact disc is inserted, the shutter will close after 15 seconds.

POWER·VOLUME (Power and Volume)

Push “POWER·VOLUME” to turn the audio system on and off. Turn “POWER·VOLUME” to adjust the volume.

RAND (Random)

Compact disc player

There are two random features—you can either listen to the tracks on one compact disc in random order, or listen to the tracks on all the compact discs in the magazine in random order.

To play the tracks on one disc in random order:
Quickly push and release “RAND” (preset button 1). “RAND” will appear on the display and the player will perform the tracks on the disc you are listening to in random order. To turn off the random feature, push this button again.

To play all the tracks in the magazine in random order:
Push and hold “RAND” (preset button 1) until you hear a beep. “RAND” will appear on the display and the player will perform all the tracks on all the discs in the magazine in random order. To turn off the random feature, push this button again.

MP3/WMA player

There are two random playback features—you can either listen to all of the files on the compact discs in random order. You can also listen to the files in a single folder in random order.

To randomly play the files in a folder:
Quickly push and release “RAND” (preset button 1). “RAND” will appear on the display.

To randomly play all of the files on the compact disc:
Push and hold “RAND” (preset button 1) until you hear a beep. “RAND” will appear on the display and the player will play all of the files on the disc in random order. To turn off the random playback feature, push this button again.

RPT (Repeat)

Compact disc player

There are two repeat features—you can either replay a disc track or a whole compact disc.

Repeating a track:
Quickly push and release “RPT” (preset button 2) while the track is playing. “RPT” will appear on the display. When the track ends, it will automatically replay. To turn off the repeat feature, push this button again.

Repeating a disc:
Push and hold “RPT” (preset button 2) until you hear a beep. “RPT” will appear on the display. The player will repeat all the tracks on the disc you are listening to. When the disc ends, the player will automatically go back to the first track on the disc and replay. To turn off the repeat feature, push this button again.

MP3/WMA player

There are two repeat features—you can repeat a signal file or an entire folder.

Repeating a file:
Quickly push and release “RPT” (preset button 2) while the file is playing. “RPT” will appear on the display. When the file ends, it will repeat automatically. This process will be continued until you push the button again to turn off the repeat feature.

Repeating a folder:
Push and hold “RPT” (preset button 2) until you hear a beep. “RPT” will appear on the display. The player will repeat all of the files in the folder. When the last file in the folder ends, the folder will repeat from the beginning. To turn off the repeat feature, push this button again.

SCAN

Radio

You can either scan all the frequencies on a band or scan only the preset stations for that band.

To scan the preset stations:
Push and hold the “SCAN” button until you hear a beep. The radio will tune in the next preset station up the band, stay there for 5 seconds, and then move to the next preset station. To stop scanning, push this button again.

To scan all the frequencies:
Quickly push and release the “SCAN” button. The radio will find the next station up the station band, stay there for 5 seconds, and then scan again to the next station. To stop scanning, push this button again.

XM satellite radio*—

You can either scan the currently selected channel category or scan only the preset channels for that band.

To scan the preset channels:
Push and hold the “SCAN” button until you hear a beep. “SCAN” appears on the display. The radio will tune in the next preset channel up the band, stay there for 5 seconds, and then move to the next preset channel. To stop scanning, push this button again.

To scan the currently selected channel category:
Quickly push and release the “SCAN” button. “SCAN” appears on the display. The radio will find the next channel in the same channel category up the band, stay there for 5 seconds, and then scan again. To stop scanning, push this button again.

*: Use of satellite radio requires XM tuner and service. Contact your Toyota dealer for details.

Compact disc player

There are two scan features—you can either scan the tracks on a specific disc or scan the first tracks of all the discs in the magazine.

Scanning the tracks on a disc:
Quickly push and release the “SCAN” button. “SCAN” will appear on the display and the player will scan all the tracks on the disc you are listening to. To stop scanning, push this button again. If the player scanned all the tracks on the disc, it will stop scanning.

Scanning the first tracks of all the discs in the magazine:
Push the “SCAN” button until you hear a beep. “SCAN” will appear on the display and the player will scan the first track on the next disc. To stop scanning, push this button again. If the player has scanned all the discs, it will stop scanning.

MP3/WMA player

There are two scan features—you can either scan the files in a folder on a specific disc or scan the first file of all the folder.

Scanning the files on a folder:
Quickly push and release “SCAN”. “SCAN” will appear on the display and the player will scan all the files in the folder you are listening to. To select a file, push the “SCAN” again. After all the tracks on the disc have been scanned in one pass, normal play resumes.

Scanning the first file of all the folders:
Push “SCAN” until you hear a beep. “SCAN” will appear on the display and the player will scan the first file of the next folder. To select a folder, push the “SCAN” again. After all the folders have been scanned in one pass, normal play resumes.

SEEK·TRACK (Seeking/Tracking up/down)

Radio

In the seek mode, the radio finds and plays the next station up or down the station band.

To seek the next station, quickly push and release “∧” or “∨” side of the “SEEK·TRACK” button. Do this again to find the station after that.

XM satellite radio*—

To select the next channel within the current channel category, push the “∧” or “∨” side of the “SEEK·TRACK” button. Repeat until a desired channel is found.

*: Use of satellite radio requires XM tuner and service. Contact your Toyota dealer for details.

Compact disc player

Use this button to skip up or down to a different track.

Push “∧” or “∨” side of the “SEEK·TRACK” button until the number of the track you want to listen to appears on the display. If you want to return to the beginning of the current track, quickly push the “∨” side of the button one time.

MP3/WMA player

Use this button to file up or down to a different file.

Push “∧” or “∨” side of the “SEEK·TRACK” several times until the file you want to listen to appears on the display. If you want to return to the beginning of the current file, push the “∨” side of the button one time.

ST (Stereo reception) display

Your radio automatically changes to stereo reception when a stereo broadcast is received. “ST” appears on the display. If the signal becomes weak, the radio reduces the amount of channel separation to prevent the weak signal from creating noise. If the signal becomes extremely weak, the radio switches from stereo to mono reception.

TEXT

XM satellite radio*1—

When you push the “TEXT” button, the display changes as follows:
CH NAME → TITLE (SONG/PROGRAM TITLE) → NAME (ARTIST NAME/FEATURE) → CH NUMBER → CH NAME

Up to 10 alphanumeric characters can be displayed. (Some information will not be fully displayed.)

The message display will be canceled if any button that affects the display is pushed.

If there is no song/program title or artist name/feature associated with the channel at that time, “– – – – –” will appear on the display.

This XM tuner supports “Audio Services” (Music and Talk) of only XM satellite radio and “Text Information”*2 linked to the respective audio services.

*1: Use of satellite radio requires XM tuner and service. Contact your Toyota dealer for details.

*2: Text Information includes, Channel Name, (Artist) Name, (Song) Title and Category Name.

Compact disc player

This button is used to change the display for the compact disc that contains text data.

To change the display, quickly push and release the “TEXT” button while the compact disc is playing. The display changes in the order from the elapsed time to disc title to track title, then back to the elapsed time.

If this button is pushed while a compact disc that does not contain text data is playing, “NO TITLE” will appear on the display.

If the entire disc or track title does not appear on the display, push and hold the button until you hear a beep. The rest of the title will appear.

MP3/WMA player

This button is used to change the display for the MP3/WMA file that contains text data.

To change the display, quickly push and release the “TEXT” button while the MP3/WMA file is playing. The display changes in the order from the elapsed time to folder name to file name to album title to track title to artist name, then back to the elapsed time.

If this button is pushed while an MP3/WMA file that does not contain text data is playing, “NO TITLE” will appear on the display.

If the entire text data is not displayed, push and hold it until you hear a beep. The rest of the text data will appear.

TUNE·FILE (Tuning and File up/down)

Radio

Turn the “TUNE·FILE” knob clockwise to step up the frequency. Turn the knob counterclockwise to step down the frequency.

XM satellite radio*—

Turn the “TUNE·FILE” knob clockwise to step up the channel. Turn the knob counterclockwise to step down the channel.

*: Use of satellite radio requires XM tuner and service. Contact your Toyota dealer for details.

MP3/WMA player

Turn the “TUNE·FILE” knob clockwise to file up. Turn the knob counterclockwise to file down.

Audio remote controls (steering switches)

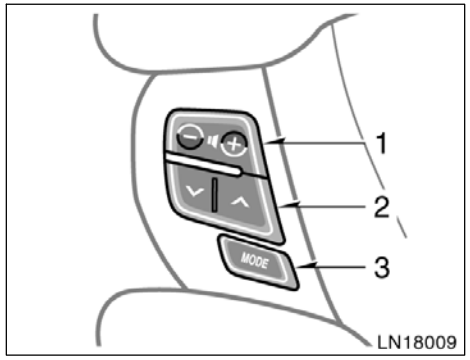

Type A

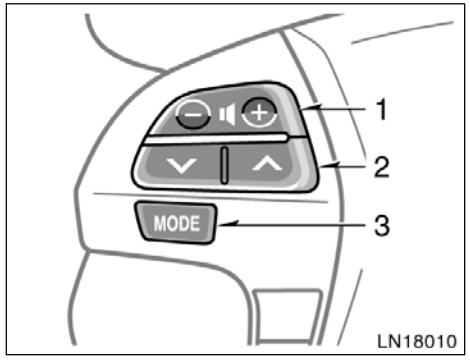

Type B

Some parts of the audio system can be adjusted using the switches on the steering wheel.

Details of the specific switches, controls, and features are described below.

1. Volume control switch
2. “∧∨” switch
3. “MODE” switch

1. Volume control switch

Push the “+” side to increase the volume. The volume continues to increase while the switch is being pushed.

Push the “–” side to decrease the volume. The volume continues to decrease while the switch is being pushed.

2. “∧ ∨” switch

Radio

This switch has the following features—

To select a preset station:
Quickly push and release the “∧” or “∨” side of the switch. Do this again to select the next preset station.

To seek a station:
Push and hold the “∧” or “∨” side of the switch until you hear a beep. Do this again to find the next station. If you push the switch on either side during the seek mode, seeking will be cancelled.

To step up or down the frequency, push and hold the switch even after you hear a beep. When you release the switch, the radio will begin seeking up or down for a station. Do this again to find the next station.

XM satellite radio*—

To select a preset channel, push the “∧” or “∨” side of the switch. Repeat until a desired channel is found.

*: Use of satellite radio requires XM tuner and service. Contact your Toyota dealer for details.

Compact disc player

Use this switch to skip up or down to a different track in either direction.

Quickly push and release the “∧” or “∨” side of the switch until the track you want to listen to is set. If you want to return to the beginning of the current track, push the “∨” side of the switch once, quickly.

With compact disc changer only—

Push and hold the “∧” or “∨” side of the switch until the disc you want to listen to is set.

MP3/WMA player

This switch has the following features—

To select a desired file:

Quickly push and release the “∧” or “∨” side of the switch until the file you want to listen to is set. If you want to return to the beginning of the current file, push the “∨” side of the switch once, quickly.

Without compact disc changer—

To select a desired folder:
Push and hold the “∧” or “∨” side of the switch until you hear a beep. Repeat this until the folder you want to listen to is set.

With compact disc changer—

To select a desired disc:
Push and hold the “∧” or “∨” side of the switch until the disc you want to listen to is set.

3. “MODE” switch

Push the “MODE” switch to select an audio mode. Each push changes the mode sequentially if the desired mode is ready to use.

To turn the audio system on, push the “MODE” switch.

To turn the audio system off, push and hold the “MODE” switch until the system turns off.

AUX adapter

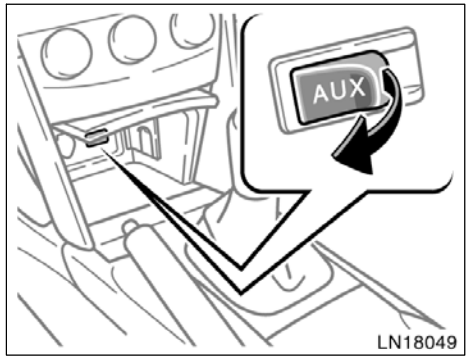

An AUX adapter is installed inside the auxiliary box.

By inserting a mini plug into the AUX adapter, you can listen to music from a portable audio device through the vehicle’s speaker system.

To use the AUX adapter, switch to the AUX mode (external device mode) by pressing the “DISC·AUX” button. When the AUX adapter is in use, “AUX” will appear on the display. To adjust the volume, turn the “POWER·VOLUME” knob.

When using a portable audio device connected to the power outlet, noise may occur during playback. If this happens, use the power source of the portable audio device.

If you install an audio system other than a genuine audio system, you will not be able to use the AUX adapter.

Connected cables can be passed through the hole to the front passenger side of the auxiliary box. For details, see “Auxiliary boxes” on page 277 in Section 1–10.

Audio system operating hints

NOTICE

To ensure correct audio system operations:

- ***Be careful not to spill beverages over the audio system.***
- ***Do not put anything other than a compact disc into the slot.***
- ***The use of a cellular phone inside or near the vehicle may cause a noise from the speakers of the audio system which you are listening to. However, this does not indicate a malfunction.***

RADIO RECEPTION

Usually, a problem with radio reception does not mean there is a problem with your radio—it is just the normal result of conditions outside the vehicle.

For example, nearby buildings and terrain can interfere with FM reception. Power lines or telephone wires can interfere with AM signals. And of course, radio signals have a limited range. The farther you are from a station, the weaker its signal will be. In addition, reception conditions change constantly as your vehicle moves.

Here are some common reception problems that probably do not indicate a problem with your radio:

FM

Fading and drifting stations—Generally, the effective range of FM is about 40 km (25 miles). Once outside this range, you may notice fading and drifting, which increase with the distance from the radio transmitter. They are often accompanied by distortion.

Multi–path—FM signals are reflective, making it possible for two signals to reach your antenna at the same time. If this happens, the signals will cancel each other out, causing a momentary flutter or loss of reception.

Static and fluttering—These occur when signals are blocked by buildings, trees, or other large objects. Increasing the bass level may reduce static and fluttering.

Station swapping—If the FM signal you are listening to is interrupted or weakened, and there is another strong station nearby on the FM band, your radio may tune in the second station until the original signal can be picked up again.

AM

Fading—AM broadcasts are reflected by the upper atmosphere—especially at night. These reflected signals can interfere with those received directly from the radio station, causing the radio station to sound alternately strong and weak.

Station interference—When a reflected signal and a signal received directly from a radio station are very nearly the same frequency, they can interfere with each other, making it difficult to hear the broadcast.

Static—AM is easily affected by external sources of electrical noise, such as high tension power lines, lightening, or electrical motors. This results in static.

XM*

Alternation or modifications carried out without appropriate authorization may invalidate the user’s right to operate the equipment.

*: Use of satellite radio requires XM tuner and service. Contact your Toyota dealer for details.

NOTICE

This equipment has been tested and found to comply with the limits for a class B digital device, pursuant to Part 15 of the FCC Rules. These limits are designed to provide reasonable protection against harmful interference in a residential installation. This equipment generates, uses and can radiate radio frequency energy and, if not installed and used in accordance with the instructions, may cause harmful interference to radio communications. However, there is no guarantee that interference will not occur in a particular installation.

If this equipment does cause harmful interference to radio or television reception, which can be determined by turning the equipment off and on, the user is encouraged to try to correct the interference by one or more of the following measures:

—Reorient or relocate the receiving antenna.

—Increase the separation between the equipment and receiver.

—Connect the equipment into an outlet on a circuit different from that to which the receiver is connected.

—Consult the dealer or an experienced radio/TV technician for help.

CARING FOR YOUR COMPACT DISC PLAYER AND DISCS

- Type 2 only—Your compact disc player is intended for use with 12 cm (4.7 in.) discs only.
- Extremely high temperatures can keep your compact disc player from working. On hot days, use the air conditioning to cool the vehicle interior before you listen to a disc.
- Bumpy roads or other vibrations may make your compact disc player skip.
- If moisture gets into your compact disc player, you may not hear any sound even though your compact disc player appears to be working. Remove the disc from the player and wait until it dries.

⚠ CAUTION

Compact disc players use an invisible laser beam which could cause hazardous radiation exposure if directed outside the unit. Be sure to operate the player correctly.

- Use only compact discs marked as shown above. The following products may not be playable on your compact disc player.

  Copy–protected CD
  CD–R (CD–Recordable)
  CD–RW (CD–Re–writable)
  CD–ROM

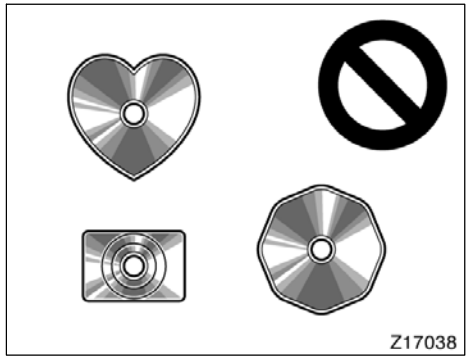

Special shaped discs

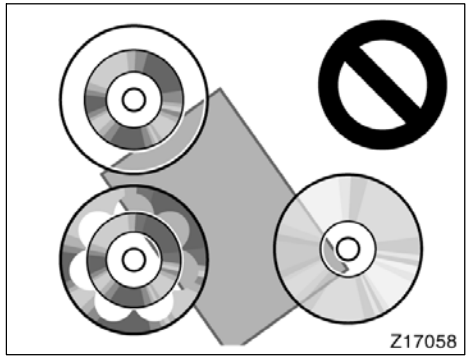

Transparent/translucent discs

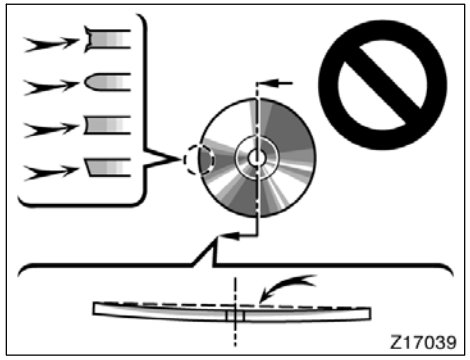

Low quality discs

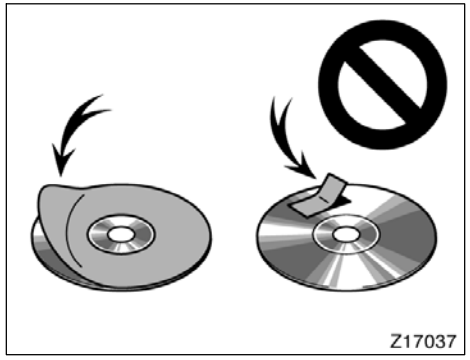

Labeled discs

NOTICE

Do not use special shaped, transparent/translucent, low quality or labeled discs such as those shown in the illustrations. The use of such discs may damage the player or changer, or it may be impossible to eject the disc.

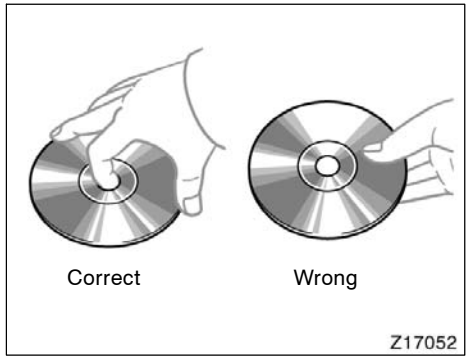

- Handle compact discs carefully, especially when you are inserting them. Hold them on the edge and do not bend them. Avoid getting fingerprints on them, particularly on the shiny side.
- Dirt, scratches, warping, pin holes, or other disc damage could cause the player to skip or to repeat a section of a track. (To see a pin hole, hold the disc up to the light.)
- Remove discs from the compact disc player when you are not listening to them. Store them in their plastic cases away from moisture, heat, and direct sunlight.

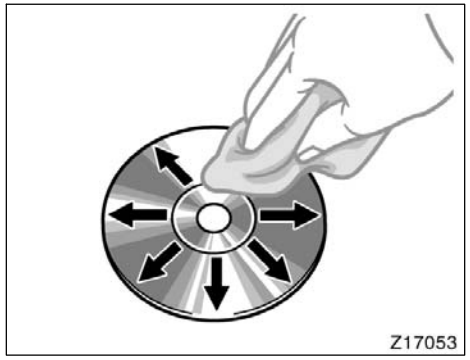

To clean a compact disc: Wipe it with a soft, lint–free cloth that has been dampened with water. Wipe in a straight line from the center to the edge of the disc (not in circles). Dry it with another soft, lint–free cloth. Do not use a conventional record cleaner or anti–static device.

MP3/WMA FILES

- MP3 (MPEG Audio Layer 3) and WMA (Windows Media Audio) are audio compression standards.
- The MP3/WMA player can play MP3 and WMA files on CD–ROM, CD–R and CD–RW discs.

  The unit can play disc recordings compatible with ISO 9660 level 1 and level 2 and with the Romeo and Joliet file system.
- When naming an MP3 or WMA file, add the appropriate file extension (.mp3 or .wma).
- The MP3/WMA player plays back files with .mp3 or .wma file extensions as MP3 or WMA files. To prevent noise and playback errors, use the appropriate file extensions.
- Multi–session compatible CDs can also be played.
- MP3 files are compatible with the ID3 Tag Ver. 1.0, Ver. 1.1, Ver. 2.2, and Ver. 2.3 formats. The unit cannot display disc title, track title and artist name in other formats.
- WMA files can contain a WMA tag that is used in the same way as an ID3 tag. WMA tags carry information such as track title, artist name.
- The emphasis function is available only when playing MP3/WMA files recorded at 32, 44.1 and 48 kHz. (The system can play MP3 files with sampling frequencies of 16, 22.05, and 24 kHz. However, the emphasis function is not available for files recorded at these frequencies.)
- The sound quality of MP3/WMA files generally improves with higher bit rates. In order to achieve a reasonable level of sound quality, discs recorded with a bit rate of at least 128 kbps are recommended.

  Playable bit rates
  MP3 files:
  MPEG1 LAYER3—64 to 320 kbps
  MPEG2 LSF LAYER3—64 to 160 kbps
  WMA files:
  Ver. 7, 8 CBR—48 to 192 kbps
  Ver. 9 CBR—48 to 320 kbps

- The MP3/WMA player does not play back MP3/WMA files from discs recorder using packet write data transfer (UDF format). Discs should be recorded using “pre–mastering” software rather than packet–write software.
- M3u playlists are not compatible with the audio player.
- MP3i (MP3 interactive) and MP3PRO formats are not compatible with the audio player.
- The MP3 player is compatible with VBR (Variable Bit Rate).
- When playing back files recorded as VBR (Variable Bit Rate) files, the play time will not be correctly displayed if fast forward or reverse operations are used.
- It is not possible to check folders that do not include MP3/WMA files.
- MP3/WMA files in folders up to 8 levels deep can be played. However, the start of playback may be delayed when using discs containing numerous levels of folders. For this reason, we recommend creating discs with no more than two levels of folders.
- It is possible to play up to 192 folders or 255 files on one disc.

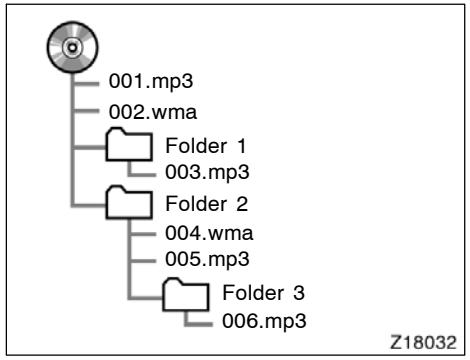

- The play order of the compact disc with the structure shown on the left is as follows:

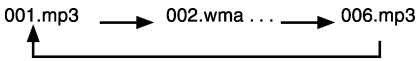

CD–R and CD–RW discs

- CD–R/CD–RW discs that have not been subject to the “finalizing process” (a process that allows discs to be played on a conventional CD player) cannot be played.
- It may not be possible to play CD–R/CD–RW discs recorded on a music CD recorder or a personal computer because of disc characteristics, scratches or dirt on the disc, or dirt, condensation, etc. on the lens of the unit.
- It may not be possible to play discs recorded on a personal computer depending on the application settings and the environment. Record with the correct format. (For details, contact the appropriate application manufacturers of the applications.)
- CD–R/CD–RW discs may be damaged by direct exposure to sunlight, high temperatures or other storage conditions. The unit may be unable to play some damaged discs.

- If you insert a CD–RW disc into the MP3/WMA player, playback will begin more slowly than with a conventional CD or CD–R disc.
- Recordings on CD–R/CD–RW cannot be played using the DDCD (Double Density CD) system.

TERMS

Packet write—

This is a general term that describes the process of writing data on–demand to CD–R, etc., in the same way that data is written to floppy or hard discs.

ID3 Tag—

This is a method of embedding track–related information in an MP3 file. This embedded information can include the track title, the artist’s name, the album title, the music genre, the year of production, comments and other data. The contents can be freely edited using software with ID3 tag editing functions. Although the tags are restricted to the number of characters, the information can be viewed when the track is played back.

WMA Tag—

WMA files can contain a WMA tag that is used in the same way as an ID3 tag. WMA tags carry information such as track title, artist name.

ISO 9660 format—

This is the international standard for the formatting of CD–ROM folders and files. For the ISO 9660 format, there are two levels of regulations.

Level 1:

The file name is in 8.3 format (8 character file names, with a 3 character file extension. File names must be composed of one–byte capital letters and numbers. The “_” symbol may also be included.)

Level 2:

The file name can have up to 31 characters (including the separation mark “.” and file extension). Each folder must contain fewer than 8 hierarchies.

m3u—

Playlists created using “WINAMP” software have a playlist file extension (.m3u).

MP3—

MP3 is an audio compression standard determined by a working group (MPEG) of the ISO (International Standard Organization). MP3 compresses audio data to about 1/10 the size of that on conventional discs.

WMA—

WMA (Windows Media Audio) is an audio compression format developed by Microsoft. It compresses files into a size smaller than that of MP3 files. The decoding formats for WMA files are Ver. 7, 8, and 9.

Hands–free phone system——Reference

Phone Setup (see page 221)

- **Pair phone**

  To use the hands–free system, you need to register your phone in the system.
- **Change name**

  The registered phone names can be changed.
- **Delete**

  The registered phones can be deleted.
- **List phones**

  The registered phone names can be checked.
- **Select phone**

  The registered phones can be selected.
- **Set passkey**

  The passkey can be changed.

Security (see page 226)

- **Set PIN**

  The PIN can be set or changed.
- **Phone book lock**

  The phone book can be locked.
- **Phone book unlock**

  The locked phone book can be unlocked.

System Setup (see page 230)

- **Adjust Guidance Volume**

  Guidance volume can be adjusted.
- **Initialize**

Phone Book (see page 230)

- **Add Entry**

  Phone numbers and voice tags can be registered.
- **Change Name**

  The registered names can be changed.
- **Delete Entry**

  The registered names can be deleted.

- **Delete Speed Dial**

  The registered speed dial can be deleted.
- **List names**

  The registered names can be checked.
- **Set Speed Dial**

  Speed dials can be set

Redial (see page 238)

Callback (see page 239)

Making a phone call (see page 240)

Receiving a phone call (see page 243)

Talking on the phone (see page 244)

—Some basics

This system supports Bluetooth®, a wireless system that allows you to make or receive calls without taking your hands from the steering wheel and without using cables to connect the phone and system.

The phone must be paired to the system before using the hands–free feature. If your cellular phone does not support Bluetooth®, this system will not function.

⚠ CAUTION

While you are driving, do not use a cellular phone or connect the Bluetooth® phone.

NOTICE

Do not leave your cellular phone in the car. The temperature indoor may be high and damage the phone.

The system may not function in the following conditions and places:

- The cellular phone is turned off.
- The current position is outside the communication area.
- The cellular phone is not connected.
- The cellular phone has a low battery.
- The cellular phone is hiding behind the seat or in the glove box and console box.
- The cellular phone touches or is covered with metal materials.

This system supports the following service.

- HFP (Hands Free Profile) Ver. 1.0
- OPP (Object Push Profile) Ver. 1.1

If your cellular phone does not support HFP, you cannot enter the Bluetooth phone, and take OPP service individually.

BLUETOOTH is a trademark owned by Bluetooth SIG. Inc.

When transferring ownership of the vehicle:

A lot of personal data is registered when you use the hands–free system. When transferring ownership of the vehicle, initialize the system.

If you initialize it, the former state will never come back again. Pay much attention when initializing the data.

You can initialize the following data in the system.

- Phone book data
- Dialed numbers and received calls
- Speed dial
- Bluetooth® phone data
- Security code

FCC ID: HYQBTAU01A
IC ID: 1551A–BTAU01A
MADE IN JAPAN

This device complies with Part 15 of the FCC Rules and RSS–210. Operation is subject to the following two conditions: (1) This device may not cause harmful interference, and (2) This device must accept any interference received, including interference that may cause undesired operation.

CAUTION

Changes or modifications not expressly approved by the party responsible for compliance could void the user’s authority to operate the equipment.

NOTE: This equipment has been tested and found to comply with the limits for a Class B digital device, pursuant to part 15 of the FCC Rules. These limits are designed to provide reasonable protection against harmful interference in a residential installation. This equipment generates, uses and can radiate radio frequency energy and, if not installed and used in accordance with the instructions, may cause harmful interference to radio communications. However, there is no guarantee that interference will not occur in a particular installation. If this equipment does cause harmful interference to radio or television reception, which can be determined by turning the equipment off and on, the user is encouraged to try to correct the interference by one or more of the following measures:
–Reorient or relocate the receiving antenna.
–Increase the separation between the equipment and receiver.
–Connect the equipment into an outlet on a circuit different from that to which the receiver is connected.
–Consult the dealer or an experienced radio/TV technician for help.

CAUTION: Radio Frequency Radiation Exposure
This equipment complies with FCC radiation exposure limits set forth for uncontrolled equipment and meets the FCC radio frequency (RF) Exposure Guidelines in Supplement C to OET65. This equipment has very low levels of RF energy that it deemed to comply without maximum permissive exposure evaluation (MPE). But it is desirable that it should be installed and operated with at least 20 cm and more between the radiator and person’s body (excluding extremities: hands, wrists, feet and legs).

Co–location: This transmitter must not be co–located or operated in conjunction with any other antenna or transmitter.

—Control and features

▶Steering switches and microphone

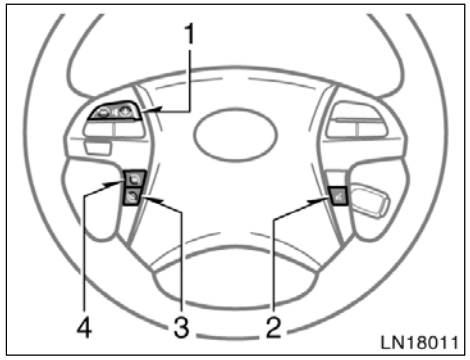

Steering switches (Type A)

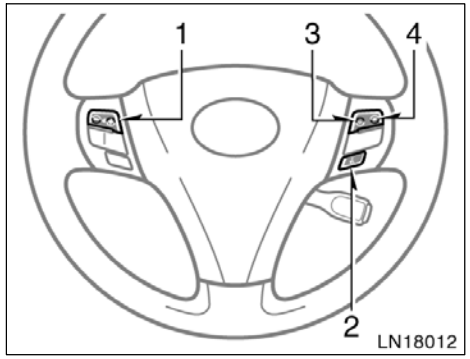

Steering switches (Type B)

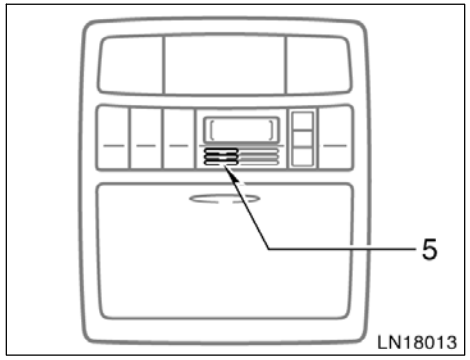

Overhead console

1. Volume control switch

To increase the volume: Push “+”.
To decrease the volume: Push “–”.

When driving at 80 km/h (50 mph) or more, the volume automatically increases without switch adjustment. When your speed falls below 70 km/h (43 mph), the volume automatically returns to its original level.

Voice guidance volume cannot be changed by pushing the volume control switch on the steering wheel.

2. Talk switch

Pushing the talk switch turns the hands–free system on and initiates the speech command system.

Pushing and holding the talk switch ends the speech command system.

3. Off–hook switch

Pushing the off–hook switch turns the hands–free system on.

When receiving a call, pushing the off–hook switch allows you to talk on the phone.

4. On–hook switch

When the hands–free system is on, pushing the on–hook switch turns the hands–free system off.

5. Microphone

The microphone is used when talking on the phone or using the speech command system.

▶**Audio unit**

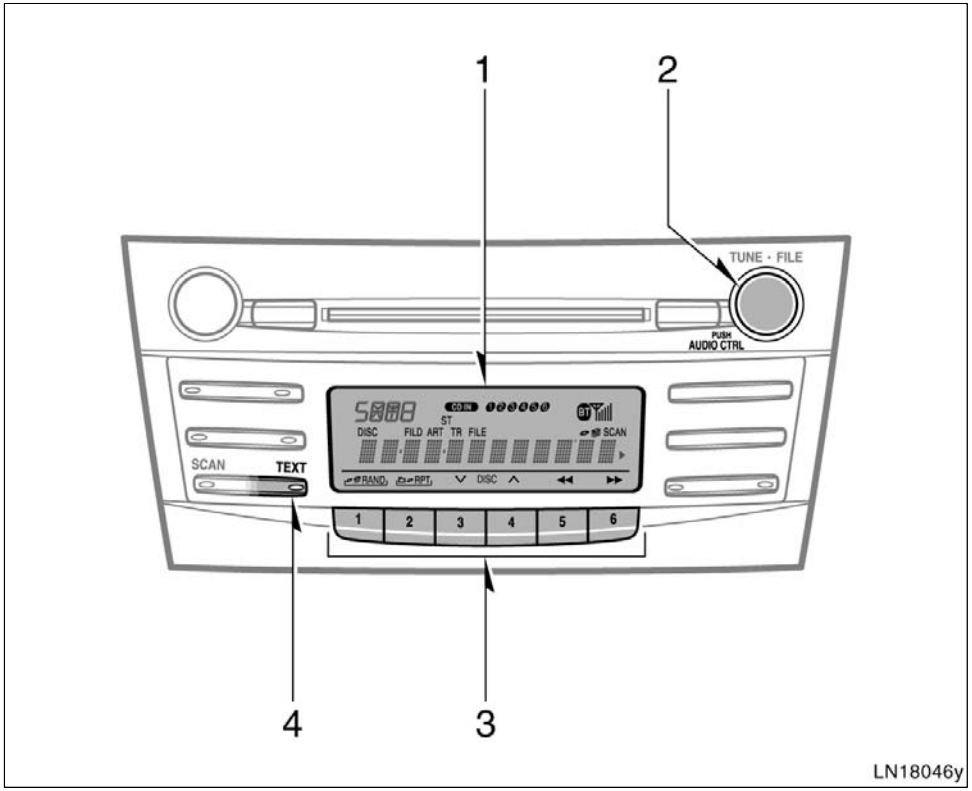

1. Display

Displays such items as the reception level, a party’s name and phone number. See “DISPLAY” described on the following page for further details about the display.

2. “AUDIO CTRL” knob

Turning the “AUDIO CTRL” knob displays the menu items, names, numbers, etc. to be selected. To select an item, push the “AUDIO CTRL” knob. Due to safety concerns, the “AUDIO CTRL” knob does not function while the vehicle is in motion.

3. Preset buttons

Pushing the preset button displays the registered speed dial numbers.

4. “TEXT” button

When the party’s name or phone number is too long to be displayed, pushing and holding the “TEXT” button displays the remaining characters.

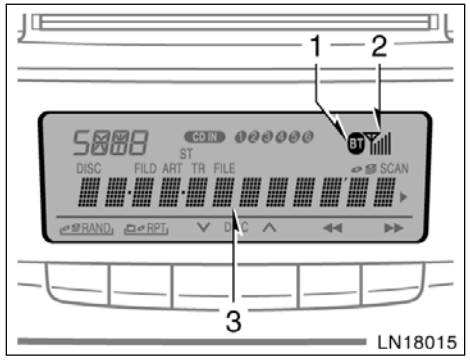

DISPLAY

1. Bluetooth® display

Displays when a Bluetooth® connection is made. If there is no display, the Bluetooth® connection has not been made and communication between the phone and system is not possible. When using the hands–free system, make sure that “BT” is displayed. The display is updated in real time.

2. Reception level display

Displays the reception level of the radio wave signals. This may not match the display on the cellular phone. The reception level of some cellular phones may not be displayed.

The number of bars is greater when the signal received is stronger.

3. Message display

Displays phone numbers, names, comments, menu items, etc.

—Phone Setup

The phone setup menu includes the following:

- Pair Phone

To use the hands–free system, you need to register your phone in the system. Once you have registered it, you can make a hands–free call. Up to 6 phones can be registered.

- Select Phone

When the system connects to Bluetooth®, the phone previously used is automatically selected. Select a different phone if necessary. Only the selected phone can be used with the hands–free system.

- Change Name

The registered phone names can be changed.

- List Phones

The registered phone names can be checked.

The following can be performed during the name playback:

- **Select phone**
- **Change name**
- **Delete**

- Set PassKey

The passkey can be changed. A 4 to 8 digit code can be input as a passkey.

- Delete

The registered phones can be deleted.

To enter the phone setup menu

1. Push the off–hook switch to turn the hands–free system on.
2. Follow voice guidance instructions, or turn the “AUDIO CTRL” knob until “Setup” is displayed and push the knob.

“Setup. Please push the talk switch and say security, or phone setup.” is heard.

3. Follow voice guidance instructions, or turn the “AUDIO CTRL” knob until “Phone Setup” is displayed and push the knob.

“Phone setup. Push the talk switch and say pair phone, select phone, change name, list phones, set passkey or delete.” is heard.

“XXX (phone name) already selected.” is heard and “XXX (phone name)” is displayed.

If no phone has been registered, the system may not function properly.

To pair phones

1. Push the talk switch and say “Pair phone”, or turn the “AUDIO CTRL” knob until “Pair Phone” is displayed and push the knob.

“Pair. Push the talk switch and say a name for the phone.” is heard.

2. Follow voice guidance instructions, or turn the “AUDIO CTRL” knob until “Record Name” is displayed, push the knob and say “XXX (desired phone name)”.

“Push the talk switch and say confirm. Otherwise, say go back.” is heard.

3. Follow voice guidance instructions, or turn the “AUDIO CTRL” knob until “Confirm” is displayed and push the knob.

“XXX Ready for phone pairing. Please use the phone to connect it to the hands–free system. The passkey for the phone is....” is heard.

After “HANDS FREE” is displayed, a passkey* is displayed and “Searching.” is heard.

4. Input the displayed passkey into the phone.

“The phone is paired and ready for use. Returning to the main menu.” is heard and “Paired” is displayed.

The system may not function in the following cases:

- If 6 phones have already been registered.
- If the vehicle is moving.
- If the system cannot communicate with the phone.

*: Passkey is a password required to register a phone to the system.

INFORMATION

- ***To use the hands–free system, you need to register your phone in the system. Once you have registered it, you can make a hands–free call. Up to 6 phones can be registered.***
- ***For the operation of the phone, see the manual that comes with your cellular phone.***
- ***The passkey can be changed. See page 225 for changing the passkey.***

To select a phone

1. Push the talk switch and say “Select phone”, or turn the “AUDIO CTRL” knob until “Select Phone” is displayed and push the knob.

“Select phone. Push the talk switch and say the phone name or say list phones.” is heard.

2. Follow voice guidance instructions, or turn the “AUDIO CTRL” knob until the desired phone name is displayed and push the knob.

When the phone is selected by a voice command:

“XXX Push the talk switch and say confirm. Otherwise, say go back.” is heard and “XXX” is displayed.

Follow voice guidance instructions, or turn the “AUDIO CTRL” knob until “Confirm” is displayed and push the knob.

“XXX selected. Returning to the phone setup.” is heard.

When the phone is selected by using the knob:

“XXX selected. Returning to the phone setup.” is heard.

The system may not function in the following cases:

- If the phone is not found.
- If the system does not recognize the voice command.

To change a name

1. Push the talk switch and say “Change name”, or turn the “AUDIO CTRL” knob until “Change Name” is displayed and push the knob.

“Change name. Push the talk switch and say the phone name to change.” is heard.

2. Follow voice guidance instructions, or turn the “AUDIO CTRL” knob until the phone name that you want to change is displayed and push the knob.

When the phone is selected by a voice command:

“XXX Push the talk switch and say confirm. Otherwise, say go back.” is heard and “XXX” is displayed.

1. Follow voice guidance instructions, or turn the “AUDIO CTRL” knob until “Confirm” is displayed and push the knob.

“Push the talk switch and say a new name.” is heard.

2. Follow voice guidance instructions, or turn the “AUDIO CTRL” knob until “Record Name” is displayed, push the knob and say “XXX (desired phone name)”.

“XXX Push the talk switch and say confirm. Otherwise, say go back.” is heard.

3. Follow voice guidance instructions, or turn the “AUDIO CTRL” knob until “Confirm” is displayed and push the knob.

“Name changed. Returning to the phone setup.” is heard and “Changed” is displayed.

When the phone is selected by using the knob:

“XXX Push the talk switch and say confirm. Otherwise, say go back.” is heard and “XXX” is displayed.

1. Follow voice guidance instructions, or turn the “AUDIO CTRL” knob until “Confirm” is displayed and push the knob.

“Push the talk switch and say a new name.” is heard.

2. Follow voice guidance instructions, or turn the “AUDIO CTRL” knob until “Record Name” is displayed, push the knob and say “XXX (desired phone name)”.

“XXX Push the talk switch and say confirm. Otherwise, say go back.” is heard.

3. Follow voice guidance instructions, or turn the “AUDIO CTRL” knob until “Confirm” is displayed and push the knob.

“Name changed. Returning to the phone setup.” is heard and “Changed” is displayed.

The system may not function in the following cases:

- If no phone has been registered.
- If the system does not recognize the voice command.

To list phones

1. Push the talk switch and say “List phones”, or turn the “AUDIO CTRL” knob until “List Phones” is displayed and push the knob.

“List phones. To select a name, push the talk switch during the name playback.” is heard.

2. Follow voice guidance instructions.

“Push the talk switch and say select phone, change name, or delete.” is heard.

Select one of the following:

Select phone

Push the talk switch and say “Select phone”, or turn the “AUDIO CTRL” knob until “Select Phone” is displayed and push the knob.

For further details on selecting a phone, see page 223.

Change name

Push the talk switch and say “Change name”, or turn the “AUDIO CTRL” knob until “Change Name” is displayed and push the knob.

For further details on changing a name, see page 223.

Delete

Push the talk switch and say “Delete”, or turn the “AUDIO CTRL” knob until “Delete” is displayed and push the knob.

For further details on deleting a phone, see page 226.

If no phone has been registered, the system may not function properly.

To set a passkey

1. Push the talk switch and say “Set passkey”, or turn the “AUDIO CTRL” knob until “Set Passkey” is displayed and push the knob.

“Set Passkey. The passkey is required for the phone pairing process. Push the talk switch and say a new passkey.” is heard and passkey is displayed.

2. Follow voice guidance instructions, or turn the “AUDIO CTRL” knob to select a number.

When using a voice command:

“XXXX (new passkey) Push the talk switch and say confirm. Otherwise, continue adding numbers, or say go back or delete.” is heard and “XXXX (new passkey)” is displayed.

Follow voice guidance instructions, or turn the “AUDIO CTRL” knob until “Confirm” is displayed and push the knob.

“Passkey changed. Returning to the phone setup.” is heard.

When using the knob:

1. Turn the “AUDIO CTRL” knob to select a number. Push the “AUDIO CTRL” knob to set.
2. When the passkey is set, push the “AUDIO CTRL” knob.

“Passkey changed. Returning to the phone setup.” is heard.

The system does not function in the following cases:

- If the passkey has less than 4 digits.
- If the passkey has more than 8 digits.

To delete a phone

1. Push the talk switch and say “Delete”, or turn the “AUDIO CTRL” knob until “Delete” is displayed and push the knob.

“Delete. Push the talk switch and say the phone name to delete.” is heard.

2. Follow voice guidance instructions, or turn the “AUDIO CTRL” knob until the phone name you want to delete is displayed and push the knob.

When using a voice command:

“XXX Push the talk switch and say confirm. Otherwise, say go back.” is heard and “XXX” is displayed.

Follow voice guidance instructions, or turn the “AUDIO CTRL” knob until “Confirm” is displayed and push the knob.

“Deleted. Returning to the phone setup.” is heard and “Deleted” is displayed.

When using the knob:

“Deleted. Returning to the phone setup.” is heard and “Deleted” is displayed.

The system may not function in the following cases:

- If no phone has been registered.
- If the system does not recognize the voice command.

—Security

The security menu includes the following:

- **Set PIN (Personal Identification Number)**

The PIN can be set or changed.

- **Phone book lock**

The phone book can be locked.

When the phone book is locked, the following functions cannot be used:

- Dial by name
- Redial
- Callback
- Speed Dial
- PhoneBook
- **Phone book unlock**

The locked phone book can be unlocked.

To enter the security menu

1. Push the off–hook switch to turn the hands–free system on.
2. Follow voice guidance instructions, or turn the “AUDIO CTRL” knob until “Setup” is displayed and push the knob.

“Setup. Please push the talk switch and say security, or phone setup.” is heard.

3. Follow voice guidance instructions, or turn the “AUDIO CTRL” knob until “Security” is displayed and push the knob.

“Security. Push the talk switch and say set PIN, phone book lock, or phone book unlock.” is heard.

To set a PIN

Push the talk switch and say “Set PIN”, or turn the “AUDIO CTRL” knob until “Set PIN” is displayed and push the knob.

“There is no PIN number set. Please register a PIN number. Please push the talk switch and say a four–digit PIN number.” is heard.

When using a voice command:

1. Push the talk switch and say “XXX (new PIN number)”.
2. Follow voice guidance instructions, or turn the “AUDIO CTRL” knob until “Confirm” is displayed and push the knob.

“The PIN number has been set. Returning to the security.” is heard and “Completed” is displayed.

When using the knob:

1. Turn the “AUDIO CTRL” knob to select a number. Push the “AUDIO CTRL” knob to set.
2. Repeat the above procedure until the entire four–digit number is set.
3. When the PIN is set, push the “AUDIO CTRL” knob.
4. Follow voice guidance instructions, or turn the “AUDIO CTRL” knob until “Confirm” is displayed and push the knob.

“The PIN number has been set. Returning to the security.” is heard and “Completed” is displayed.

If the PIN is to be changed:

“There is a PIN number in place. Push the talk switch and say the correct PIN number.” is heard and “Current PIN?” is displayed.

1. Follow voice guidance instructions, or use the “AUDIO CTRL” knob to input the current PIN number.

“Please push the talk switch and say a four–digit PIN number.” is heard.

2. Push the talk switch and say “XXXX (new PIN number)”.

“The PIN number has been set. Returning to the security.” is heard and “Completed” is displayed.

If the current number is not correct, the system does not function properly.

To lock the phone book

1. Push the talk switch and say “Phone book lock”, or turn the “AUDIO CTRL” knob until “Phbk Lock” is displayed and push the knob.

“There is a PIN number in place. Push the talk switch and say the correct PIN number.” is heard and “Current PIN?” is displayed.

2. Follow voice guidance instructions, or turn the “AUDIO CTRL” knob to select a number.

When using a voice command:

“XXXX Push the talk switch and say confirm. Otherwise, say go back.” is heard and “XXXX” is displayed.

Follow voice guidance instructions, or turn the “AUDIO CTRL” knob until “Confirm” is displayed and push the knob.

“PIN number accepted. The phone book is now locked. Returning to the main menu.” is heard and “Locked” is displayed.

When using the knob:

1. Turn the “AUDIO CTRL” knob to select a number. Push the “AUDIO CTRL” knob to set.
2. When the PIN number is set, push the “AUDIO CTRL” knob.

“XXXX Push the talk switch and say confirm. Otherwise, say go back.” is heard and “XXXX” is displayed.

3. Follow voice guidance instructions, or turn the “AUDIO CTRL” knob until “Confirm” is displayed and push the knob.

“PIN number accepted. The phone book is now locked. Returning to the main menu.” is heard and “Locked” is displayed.

The system may not function in the following cases:

- If the current number is not correct.
- If the phone book has already been locked.
- If the PIN number does not exist.

To unlock the phone book

1. Push the talk switch and say “Phone book unlock”, or turn the “AUDIO CTRL” knob until “Phbk Unlock” is displayed and push the knob.

“Phonebook unlock. There is a PIN number in place. Push the talk switch and say the correct PIN number.” is heard and “Current PIN?” is displayed.

2. Follow voice guidance instructions, or turn the “AUDIO CTRL” knob to select a number.

When using a voice command:

“XXXX Push the talk switch and say confirm. Otherwise, say go back.” is heard and “XXXX” is displayed.

Follow voice guidance instructions, or turn the “AUDIO CTRL” knob until “Confirm” is displayed and push the knob.

“PIN number accepted. The phone book is now unlocked. Returning to the main menu.” is heard and “Unlocked” is displayed.

When using the knob:

1. Turn the “AUDIO CTRL” knob to select a number. Push the “AUDIO CTRL” knob to set.
2. When the PIN number is set, push the “AUDIO CTRL” knob.

“XXXX Push the talk switch and say confirm. Otherwise, say go back.” is heard and “XXXX” is displayed.

3. Follow voice guidance instructions, or turn the “AUDIO CTRL” knob until “Confirm” is displayed and push the knob.

“PIN number accepted. The phone book is now unlocked. Returning to the main menu.” is heard and “Unlocked” is displayed.

The system may not function in the following cases:

- If the current number is not correct.
- If the phone book has already been unlocked.

INFORMATION

A shortcut to each of the following functions is available. Enter the phone book menu, push the off–hook switch, and say either of the following:

- ***Phone book lock***
- ***Phone book unlock***

—System Setup

The system setup menu includes the following:

- Adjust Guidance Volume
- Initialize

To enter the system setup menu

1. Push the off–hook switch to turn the hands–free system on.
2. Follow voice guidance instructions, or turn the “AUDIO CTRL” knob until “Setup” is displayed and push the knob.
3. Turn the “AUDIO CTRL” knob until “System Setup” is displayed and push the knob.

“System setup. Please select guidance volume or initialize.” is heard.

To adjust the guidance volume

1. Turn the “AUDIO CTRL” knob until “Guidance Vol” is displayed and push the knob.

“Guidance will be at this volume” is heard and the present volume level is displayed.

2. Turn the “AUDIO CTRL” knob to adjust the volume and push the knob.

To initialize

1. Turn the “AUDIO CTRL” knob until “Initialize” is displayed and push the knob.

“System initialization. This will erase all user information in the hands free system; including paired phones, phone book entries, and call history. Select confirm to initialize. Otherwise, select go back.” is heard.

2. Turn the “AUDIO CTRL” knob until “Confirm” is displayed and push the knob.

“System initialization. This will erase all user information in the hands free system; including paired phones, phone book entries, and call history. Select confirm to initialize. Otherwise, select go back.” is heard.

3. Turn the “AUDIO CTRL” knob until “Confirm” is displayed and push the knob.

“Initialized. Returning to the main menu.” is heard.

—Phone Book

The phone book menu includes the following:

- Add Entry

Phone numbers and voice tags can be registered.

- Change Name

The registered names can be changed.

- Delete Entry

The registered names can be deleted.

- Delete Speed Dial

The registered speed dial can be deleted.

- List Names

The registered names can be checked.

- Set Speed Dial

Speed dials can be set.

To enter the phone book menu

1. Push the off–hook switch to turn the hands–free system on.
2. Follow voice guidance instructions, or turn the “AUDIO CTRL” knob until “Phonebook” is displayed and push the knob.

“Phone book. Please push the talk switch and say add entry, change name, delete entry, list names, set speed dial or delete speed dial.” is heard.

If the phone book is locked, the system may not function properly.

To add entry

The add entry includes the following:

(a) By Voice

(b) By Phone

(c) Call History

(d) Manual Input

Push the talk switch and say “Add entry”, or turn the “AUDIO CTRL” knob until “Add Entry” is displayed and push the knob.

“Add Entry. How will the number be entered. Push the talk switch and say by voice, by phone, or call history.” is heard.

(a) By voice

1. Push the talk switch and say “By voice”, or turn the “AUDIO CTRL” knob until “By Voice” is displayed and push the knob.

“Voice entry. Push the talk switch and say the number.” is heard.

2. Push the talk switch and say the dial number that you want to register.

“To store, push the talk switch and say confirm. Otherwise, continue adding numbers, or say go back, or delete.” is heard and number is displayed.

3. Follow voice guidance instructions.

If “Confirm” is said, then input a voice tag.

“Push the talk switch and say a name.” is heard.

1. Push the talk switch and say the name of the dial number that you want to register.

“XXXX Push the talk switch and say confirm. Otherwise, say go back.” is heard.

2. Follow voice guidance instructions, or turn the “AUDIO CTRL” knob until “Confirm” is displayed and push the knob.

“Stored. To register this as a speed dial entry, push the talk switch and say set speed dial. Otherwise, say confirm.” is heard and “Stored” is displayed.

3. Select one of the following:

- **Confirm**
- **Speed Dial**

Confirm

Push the talk switch and say “Confirm”, or turn the “AUDIO CTRL” knob until “Confirm” is displayed and push the knob.

“Returning to the phone book.” is heard.

Speed Dial

1. Push the talk switch and say “Set speed dial”, or turn the “AUDIO CTRL” knob until “Speed Dial” is displayed and push the knob.

“Set speed dial. Push the preset button to assign to XXXX” is heard.

2. Push and hold the desired preset button.

“preset... is now assigned. Returning to the phone book.” is heard.

The system may not function in the following cases:

- If the phone book is full.
- If the dial number has more than 24 digits.

(b) By Phone

1. Push the talk switch and say “By phone”, or turn the “AUDIO CTRL” knob until “By Phone” is displayed and push the knob.

“Phone entry. Prepare to send the information from the phone. When ready, push the talk switch and say confirm.” is heard.

2. Follow voice guidance instructions, or turn the “AUDIO CTRL” knob until “Confirm” is displayed and push the knob.

“Send the information at this time.” is heard.

After the system has received the name and phone number, “Push the talk switch and say confirm. To select an alternate number, say next or previous. Otherwise, say go back.” is heard and “XXX (name)” and “XXX (number)” is displayed.

3. Follow voice guidance instructions, push the talk switch and say “Confirm”, or turn the “AUDIO CTRL” knob until the dial number that you want to register is displayed and push the knob.

Next, input a voice tag.

For further details, see page 231.

(c) Call History

1. Push the talk switch and say “Call history”, or turn the “AUDIO CTRL” knob until “Call history” is displayed and push the knob.

“Call history. Push the talk switch and say incoming or outgoing.” is heard and “Call History” is displayed.

2. Select one of the following:

- **Incoming**
- **Outgoing**

Incoming

1. Push the talk switch and say “Incoming”, or turn the “AUDIO CTRL” knob until “Incoming” is displayed and push the knob.

“Most recent incoming call was XXXX” is heard and the incoming number is displayed.

“Push the talk switch and say confirm. Otherwise, say previous, or go back.” is heard.

2. Follow voice guidance instructions, or turn the “AUDIO CTRL” knob until the dial number that you want to register is displayed and push the knob.

Next, input a voice tag.

For further details, see page 231.

Outgoing

1. Push the talk switch and say “Outgoing”, or turn the “AUDIO CTRL” knob until “Outgoing” is displayed and push the knob.

“Most recent outgoing call was XXXX” is heard and the outgoing number is displayed.

“Push the talk switch and say confirm. Otherwise, say previous, or go back.” is heard.

2. Follow voice guidance instructions, or turn the “AUDIO CTRL” knob until the dial number that you want to register is displayed and push the knob.

Next, input a voice tag.

For further details, see page 231.

(d) Manual Input

1. Turn the “AUDIO CTRL” knob until “Manual Input” is displayed and push the knob.
2. Turn the “AUDIO CTRL” knob to select a number. Push the “AUDIO CTRL” knob to set.
3. When the number is set, push the “AUDIO CTRL” knob.

Next, input a voice tag.

For further details, see page 231.

INFORMATION

- ***The system can recognize single digits from zero to nine, #(pound), ∗(star), and +(plus). Numbers that are ten or greater are not recognized.***
- ***To speed up input, it is a good idea to group all digits into a continuous string. However, you can enter each digit individually or group digits together in preferred string lengths.***

The display corresponding to each operation appears on the screen as follows:

Input operation—

You say: “Nine, nine, five”

Voice output: “995 to store push the talk switch and say confirm. Otherwise, continue adding numbers, or say go back, or delete.”

Display: “995”

You say: “Seven, three, four”

Voice output: “734 to store push the talk switch and say confirm. Otherwise, continue adding numbers, or say go back, or delete.”

Display: “995734”

Repeat the above procedure until the entire number that you want to register is input.

Go back operation—

You say: “Go back”

Voice output: “Go back. The last numbers said have been removed. Push the talk switch and say the number.”

Display: “995”

Repeating the above operation deletes the last digits in reverse order of input.

Delete operation—

You say: “Delete”

Voice output: “Deleted. Push the talk switch and say the number.”

Display: “Delete”

The display will return to the initial screen that allows a number to be input.

To list names

The voice tags can be edited during the name playback.

1. Push the talk switch and say “List names”, or turn the “AUDIO CTRL” knob until “List Names” is displayed and push the knob.

“List names. To select a name, push the talk switch during the name playback.” is heard.

2. Follow voice guidance instructions.

“XXXX selected.” is heard and “Selected” is displayed.

If you push the off–hook switch during the name playback, you can dial the number of the selected name.

Editing the voice tags

The following can be performed:

- **Dial**
- **Change Name**
- **Delete Entry**
- **Speed Dial**

“Push the talk switch and say dial, change name, delete entry, or set speed dial.” is heard and “Selected” is displayed.

Dial

Push the talk switch and say “Dial”, or turn the “AUDIO CTRL” knob until “Dial” is displayed and push the knob.

Change Name

Push the talk switch and say “Change name”, or turn the “AUDIO CTRL” knob until “Change Name” is displayed and push the knob.

For further details, see page 236.

Delete Entry

Push the talk switch and say “Delete entry”, or turn the “AUDIO CTRL” knob until “Delete Entry” is displayed and push the knob.

For further details, see page 235.

Speed dial

Push the talk switch and say “Set speed dial”, or turn the “AUDIO CTRL” knob until “Speed Dial” is displayed and push the knob.

For further details, see page 237.

To delete entry

1. Push the talk switch and say “Delete entry”, or turn the “AUDIO CTRL” knob until “Delete Entry” is displayed and push the knob.

“Delete entry. Push the talk switch and say the name to delete.” is heard.

2. Follow voice guidance instructions, or turn the “AUDIO CTRL” knob until the name that you want to delete is displayed and push the knob.

When using a voice command:

“XXXX Push the talk switch and say confirm. Otherwise, say go back.” is heard and “XXXX” is displayed.

Follow voice guidance instructions, or turn the “AUDIO CTRL” knob until “Confirm” is displayed and push the knob.

“Deleted. Returning to the phone book.” is heard and “Deleted” is displayed.

When using the knob:

“Deleted. Returning to the phone book.” is heard and “Deleted” is displayed.

The system may not function in the following cases:

- If no name has been registered.
- If the system does not recognize the voice command.

To delete speed dial

1. Push the talk switch and say “Delete speed dial”, or turn the “AUDIO CTRL” knob until “Del Spd Dial” is displayed and push the knob.

“Delete speed dial. Push the preset button to delete from speed dial.” is heard.

2. Select the preset button that you want to delete.

“To delete preset... push the talk switch and say confirm. Otherwise, say go back.” is heard.

3. Follow voice guidance instructions, or turn the “AUDIO CTRL” knob until “Confirm” is displayed and push the knob.

“Deleted.” is heard and “Deleted” is displayed.

“Returning to the phone book.” is heard.

The system may not function in the following cases:

- If no speed dial has been registered.
- If the preset button has not been assigned.

To change name

1. Push the talk switch and say “Change name”, or turn the “AUDIO CTRL” knob until “Change Name” is displayed and push the knob.

“Change name. Push the talk switch and say the name to change.” is heard.

2. Follow voice guidance instructions, or turn the “AUDIO CTRL” knob until the dial number that you want to change is displayed and push the knob.

When using a voice command:

“XXXX Push the talk switch and say confirm. Otherwise, say go back.” is heard and “XXXX” is displayed.

1. Follow voice guidance instructions, or turn the “AUDIO CTRL” knob until “Confirm” is displayed and push the knob.

“Push the talk switch and say a new name.” is heard.

2. Follow voice guidance instructions, or turn the “AUDIO CTRL” knob until “Record Name” is displayed, push the knob and say “XXX (new name)”.

“XXXX Push the talk switch and say confirm. Otherwise, say go back.” is heard.

3. Follow voice guidance instructions, or turn the “AUDIO CTRL” knob until “Confirm” is displayed and push the knob.

“Name changed. Returning to the phone book.” is heard and “Changed” is displayed.

When using the knob:

“Push the talk switch and say a new name.” is heard.

1. Follow voice guidance instructions, or turn the “AUDIO CTRL” knob until “Record Name” is displayed, push the knob and say “XXX (new name)”.

“XXXX Push the talk switch and say confirm. Otherwise, say go back.” is heard.

2. Follow voice guidance instructions, or turn the “AUDIO CTRL” knob until “Confirm” is displayed and push the knob.

“Name changed. Returning to the phone book.” is heard and “Changed” is displayed.

The system may not function in the following cases:

- If no name has been registered.
- If the system does not recognize the voice command.

To set speed dial

1. Push the talk switch and say “Set Speed dial”, or turn the “AUDIO CTRL” knob until “Speed Dial” is displayed and push the knob.

“Set speed dial. Push the talk switch and say a name.” is heard.

2. Follow voice guidance instructions, or turn the “AUDIO CTRL” knob until the dial number that you want to register is displayed and push the knob.

When using a voice command:

“XXXX To register this as a speed dial entry, push the talk switch and say confirm. Otherwise, say go back.” is heard and “XXXX” is displayed.

1. Follow voice guidance instructions, or turn the “AUDIO CTRL” knob until “Confirm” is displayed and push the knob.

“Push the preset button to assign to XXXX” is heard.

2. Push and hold the desired preset button.

“preset... is now assigned. Returning to the phone book.” is heard.

When using the knob:

“Push the preset button to assign to XXXX” is heard.

Push and hold the desired preset button.

“preset... is now assigned. Returning to the phone book.” is heard.

The system may not function in the following cases:

- If no name has been registered.
- If the system does not recognize the voice command.

INFORMATION
A shortcut to each of the following functions is available. Push the off–hook switch and talk switch, and say one of the following:
• Phone book add entry
• Phone book change name
• Phone book delete entry
• Phone book delete speed dial
• Phone book list names
• Phone book set speed dial

—Redial

The following can be performed:

- Dial
- Delete
- Store

To enter the redial

1. Push the off–hook switch to turn the hands–free system on.
2. Follow voice guidance instructions, or turn the “AUDIO CTRL” knob until “Redial” is displayed and push the knob.

“Redial. Most recent outgoing call was XXXX” is heard and outgoing history is displayed.

“Please push the off–hook switch to dial. Otherwise, push the talk switch and say dial, previous, go back, store, or delete.” is heard.

Dial

Turn the “AUDIO CTRL” knob until the number that you want to dial is displayed and push the knob. After that, do the one of the following:

- Push the off–hook switch.
- Push the talk switch and say “dial”.
- Turn the “AUDIO CTRL” knob until “Dial” is displayed and push the knob.

Delete

1. Turn the “AUDIO CTRL” knob until the dial number that you want to delete is displayed and push the knob.
2. Push the talk switch and say “Delete”, or turn the “AUDIO CTRL” knob until “Delete” is displayed and push the knob.

“Delete. Push the talk switch and say confirm. Otherwise, say go back” is heard.

3. Follow voice guidance instructions, or turn the “AUDIO CTRL” knob until “Confirm” is displayed and push the knob.

“Deleted.” is heard.

Store

1. Turn the “AUDIO CTRL” knob until the dial number that you want to register is displayed and push the knob.
2. Push the talk switch and say “Store”, or turn the “AUDIO CTRL” knob until “Store” is displayed and push the knob.

“Store. Push the talk switch and say confirm. Otherwise, say go back.” is heard.

3. Follow voice guidance instructions, or turn the “AUDIO CTRL” knob until “Confirm” is displayed and push the knob.

Next, input a voice tag.

For further details, see page 231.

The system may not function in the following cases:

- If there is no outgoing history.
- If the phone book is locked.

INFORMATION

- ***Up to five outgoing calls can be stored in the system.***
- ***When five outgoing calls are stored in memory, the oldest outgoing call is deleted to make room in memory for new calls.***
- ***Only the latest outgoing call is stored when the same telephone number is dialed.***
- ***A shortcut to “Redial” is available. Push the off–hook switch and then push the off–hook switch.***

—Callback

The following can be performed:

- Dial
- Delete
- Store

To enter the callback

1. Push the off–hook switch to turn the hands–free system on.
2. Follow voice guidance instructions, or turn the “AUDIO CTRL” knob until “Callback” is displayed and push the knob.

“Callback. Most recent incoming call was XXXX” is heard and incoming history is displayed.

“Please push the off–hook switch to dial. Otherwise, push the talk switch and say dial, previous, go back, store, or delete.” is heard.

Dial

Turn the “AUDIO CTRL” knob until the number that you want to dial is displayed and push the knob. After that, do the one of the following:

- Push the off–hook switch.
- Push the talk switch and say “Dial”.
- Turn the “AUDIO CTRL” knob until “Dial” is displayed and push the knob.

Delete

1. Turn the “AUDIO CTRL” knob until the dial number that you want to delete is displayed and push the knob.
2. Push the talk switch and say “Delete”, or turn the “AUDIO CTRL” knob until “Delete” is displayed and push the knob.

“Delete. Push the talk switch and say confirm. Otherwise, say go back” is heard.

3. Follow voice guidance instructions, or turn the “AUDIO CTRL” knob until “Confirm” is displayed and push the knob.

“Deleted.” is heard.

Store

1. Turn the “AUDIO CTRL” knob until the dial number that you want to register is displayed and push the knob.
2. Push the talk switch and say “Store”, or turn the “AUDIO CTRL” knob until “Store” is displayed and push the knob.

“Store. Push the talk switch and say confirm. Otherwise, say go back.” is heard.

3. Follow voice guidance instructions, or turn the “AUDIO CTRL” knob until “Confirm” is displayed and push the knob.

Next, input a voice tag.

For further details, see page 231.

The system may not function in the following cases:

- If there is no incoming history.
- If the phone book is locked.

INFORMATION

- ***Up to five incoming calls can be stored in the system.***
- ***When five incoming calls are stored in memory, the oldest incoming call is deleted to make room in memory for new calls.***

—Making a phone call

If the cellular phone is not registered, this system cannot be used. See page 221 for registering a cellular phone. Make sure that “BT” is displayed and get the cellular phone ready to use.

There are 3 ways to make a phone call with this system.

- **Speed dial**

A phone call can be made with a preset button in which a phone number is registered. See page 237 for setting the preset buttons.

- **Dial by Name**

The system dials the numbers corresponding to the spoken names registered in the system.

- **Dial by Number**

The system dials to the spoken numbers.

To make a phone call

Push the off–hook switch to turn the hands–free system on.

To speed dial

1. Push the preset button where the desired number is set. The name or telephone number is displayed.
2. Push the off–hook switch to dial.

To dial by Name

1. Push the talk switch and say “Dial by name”.

“Dial by name. Please push the talk switch and say the stored name, or say list names.” is heard and “Dial by Name” is displayed.

2. Push the talk switch and say “XXXX”, or turn the “AUDIO CTRL” knob until the phone name that you want to dial is displayed and push the knob.

When using a voice command:

“XXXX Push the off–hook switch to dial. Otherwise, push the talk switch and say dial, or go back.” is heard. After that, do the one of the following:

- Push the off–hook switch.
- Push the talk switch and say “Dial”.
- Turn the “AUDIO CTRL” knob until “Dial” is displayed and push the knob.

When using the knob:

It calls the number.

The system may not function in the following cases:

- If there is no number registered in the preset button.
- If the system does not recognize the voice command.

INFORMATION

- ***The phone numbers registered in the phone book can be retrieved.***
- ***The system does not recognize that the voice tag is not registered in the registered cellular phone. For details about voice tags, see “To add entry” on page 231.***
- ***A shortcut to “Dial by name” is available. Push the talk switch and say “Dial XXX (name you want to dial)”.***

To dial by Number

1. Push the talk switch and say “Dial by Number”.

“Dial by number. Please push the talk switch and say the number.” is heard and “Dial by Num” is displayed.

2. Push talk switch and say “XXXX”.

“Push the off–hook switch to dial. Otherwise, push the talk switch and say dial, go back, or delete.” is heard.

To dial the number, do the one of the following:

- Push the off–hook switch.
- Push the talk switch and say “Dial”.
- Turn the “AUDIO CTRL” knob until “Dial” is displayed and push the knob.

If the number exceeds 24 digits, the system may not function properly.

INFORMATION

- ***The system can recognize single digits from zero to nine, #(pound), ∗(star), and +(plus). Numbers that are ten or greater are not recognized.***
- ***To speed up input, it is a good idea to group all digits into a continuous string. However, you can enter each digit individually or group digits together in preferred string lengths.***

The display corresponding to each operation appears on the screen as follows:

Input operation—

You say: “Nine, nine, five”

Voice output: “995 push the off–hook switch to dial. Otherwise, push the talk switch and say dial, go back, or delete.”

Display: “995”

You say: “Seven, three, four”

Voice output: “734 push the off–hook switch to dial. Otherwise, push the talk switch and say dial, go back, or delete.”

Display: “995734”

Repeat the above procedure until the entire number that you want to dial is input.

Go back operation—

You say: “Go back”

Voice output: “Go back, the last numbers entered have been removed. Push the talk switch and continue adding numbers otherwise say dial, go back, or delete.”

Display: “995”

Repeating the above operation deletes the last digits in reverse order of input.

Delete operation—

You say: “Delete”

Voice output: “Deleted. The entire number to dial has been deleted. Please push the talk switch and say the number.”

Display: “Dial by Num”

The display will return to the initial screen that allows a number to be input.

Cancel operation—

Do either one of the following:

- ***Push the on–hook switch at anytime during the operation.***
- ***Push the talk switch and say “Cancel” after the beep at anytime during the operation except while a call is connected.***

—Receiving a phone call

When receiving a phone call, a ring tone is audible and the system changes into the telephone mode.

When receiving a phone call, the display is as follows. The display differs depending on whether or not the vehicle is in motion.

When the vehicle is stopped:
Number, name, or “Incoming” is displayed.

When the vehicle is in motion:
“Incoming” is displayed.

Do either one of the following:

- Pushing the off–hook switch allows you to talk on the phone.
- Pushing the on–hook switch refuses the call.

To adjust the ring volume, push “+” or “–” on the steering volume controls. Volume adjustment cannot be done using the audio system.

Repeatedly pushing “–” on the steering volume controls mutes the ring.

When receiving an international phone call, the name of the party may not be displayed correctly depending on the cellular phone.

To transfer a call to the phone:

The received call can be transferred from the hands–free system to the cellular phone that is connected to Bluetooth®. For details, refer to the user’s guide for the cellular phone.

—Talking on the phone

While talking on the phone, the display is as follows. The display differs depending on whether or not the vehicle is in motion.

When the vehicle is stopped:
Number is displayed.

When the vehicle is in motion:
“Talking” is displayed.

When the call is finished, push the on–hook switch.

In the following situations, your voice may not reach the party.

- Talk alternately with the other party on the phone. If you talk at the same time, the voice may not reach each other. (It is not a malfunction.)
- Keep the volume of receiving voice down. Otherwise, echo is coming up. When you talk on the phone, speak clearly towards the microphone.
- When driving on a rough road.
- When driving at high speeds.
- When the window is open.
- When the air conditioning vents face the microphone.
- When the sound of the air conditioning fan is loud.

To transfer a call from the phone:

Pushing the off–hook switch while talking on the cellular phone that is connected to Bluetooth® allows you to talk hands–free.

To transfer a call to the phone:

The call can be transferred from the hands–free system to the phone that is connected to Bluetooth®. For details, refer to the user’s guide for the cellular phone.

SECTION 1 – 9

OPERATION OF INSTRUMENTS AND CONTROLS

Air conditioning system

Manual air conditioning system
- Controls 246
- Air flow selector settings 249
- Operating tips 249

Automatic air conditioning system
- Controls 252
- Air flow selector settings 257
- Operating tips 257

Climate remote controls 260
Side and rear vents 261
Air conditioning filter 262

Manual air conditioning system——Controls

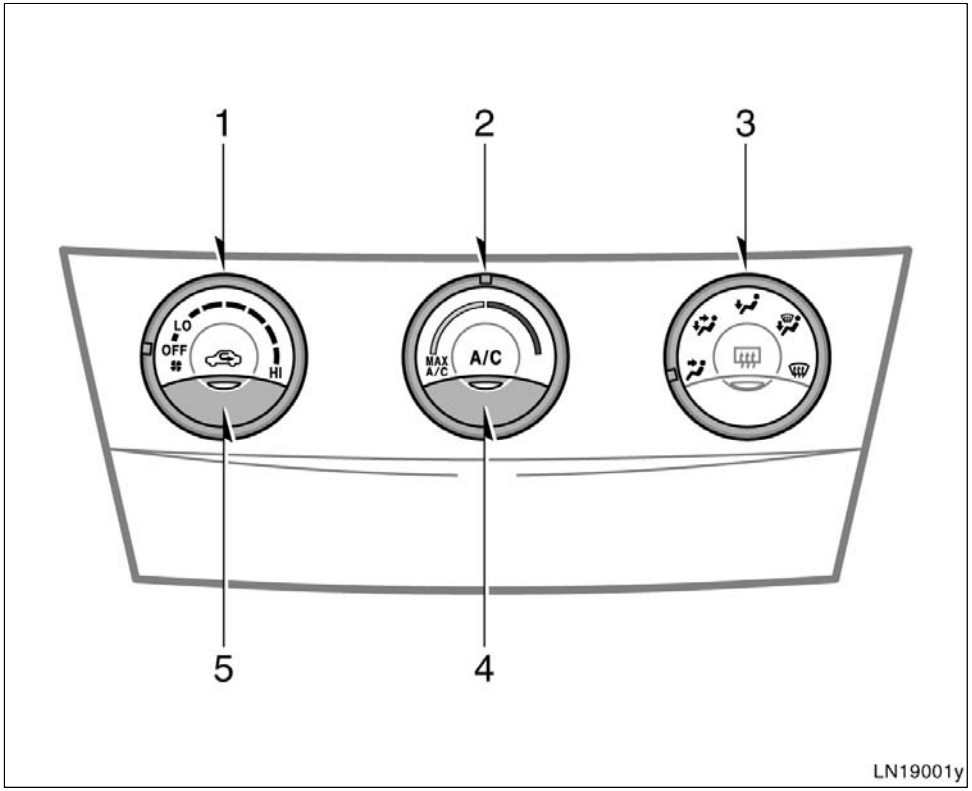

1. Fan speed selector
2. Temperature selector
3. Air flow selector
4. “A/C” button
5. Air intake selector

Fan speed selector

Turn the knob to adjust the fan speed—to the right to increase, to the left to decrease.

Temperature selector

Turn the knob to adjust the temperature—to the right to warm, to the left to cool.

“MAX A/C” position—Turning the temperature selector knob to the “MAX A/C” position turns on the air conditioning and sets the air intake selector to RECIRCULATE for quick cooling.

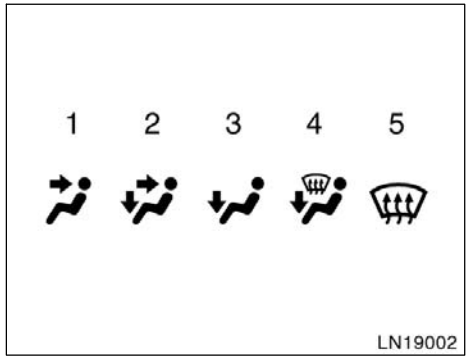

Air flow selector

Turn the knob to select the vents used for air flow.

1. **Panel—**Air flows mainly from the instrument panel vents.
2. **Bi-level—**Air flows from both the floor vents and the instrument panel vents.
3. **Floor—**Air flows mainly from the floor vents.
4. **Floor/Windshield—**Air flows mainly from the floor vents and windshield vents.

   This position allows the air intake to select FRESH automatically. This is to clean up the front view more quickly.

   If you want to return the setting to RECIRCULATE mode, press the air intake selector button once again.

   Press the “A/C” button for dehumidified heating or cooling. This setting clears the front view more quickly.
5. **Windshield—**Air flows mainly from the windshield vents.

   Turning the air flow selector to the windshield position turns on the defogging function with the purpose of clearing the front view.

   In this position, the air intake selector mode changes to FRESH automatically to clean up the front view quickly. It is not possible to return to RECIRCULATE in this position.

   Press the “A/C” button for dehumidified heating or cooling. This setting clears the front view more quickly.

For details about air flow selector settings, see “—Air flow selector settings” described below.

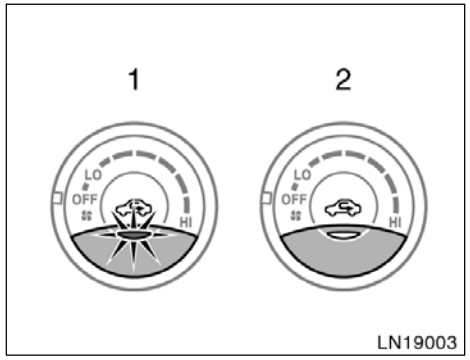

Air intake selector

Press the button to select the air source.

1. **RECIRCULATE** (indicator light is on)—Recirculates the air inside the vehicle.
2. **FRESH** (indicator light is off)—Draws outside air into the system.

To prevent fogging up of the windshield, the air intake mode may change automatically to FRESH depending on the condition of the air conditioning system.

If the ambient temperature drops, the air intake mode will automatically change from RECIRCULATE to FRESH after a few minutes. This automatic change control mode can be cancelled by pushing and holding the button for longer than 2 seconds. The automatic change control mode will be reactivated if the ignition switch is set at ACC or off.

“A/C” button

To turn on the air conditioning, press the “A/C” button. The “A/C” button indicator will come on. To turn the air conditioning off, press the button again.

If the “A/C” button indicator flashes, there is a problem in the air conditioning system and the air conditioning automatically shuts off. If this happens, take your vehicle to a Toyota dealer for service.

—Air flow selector settings

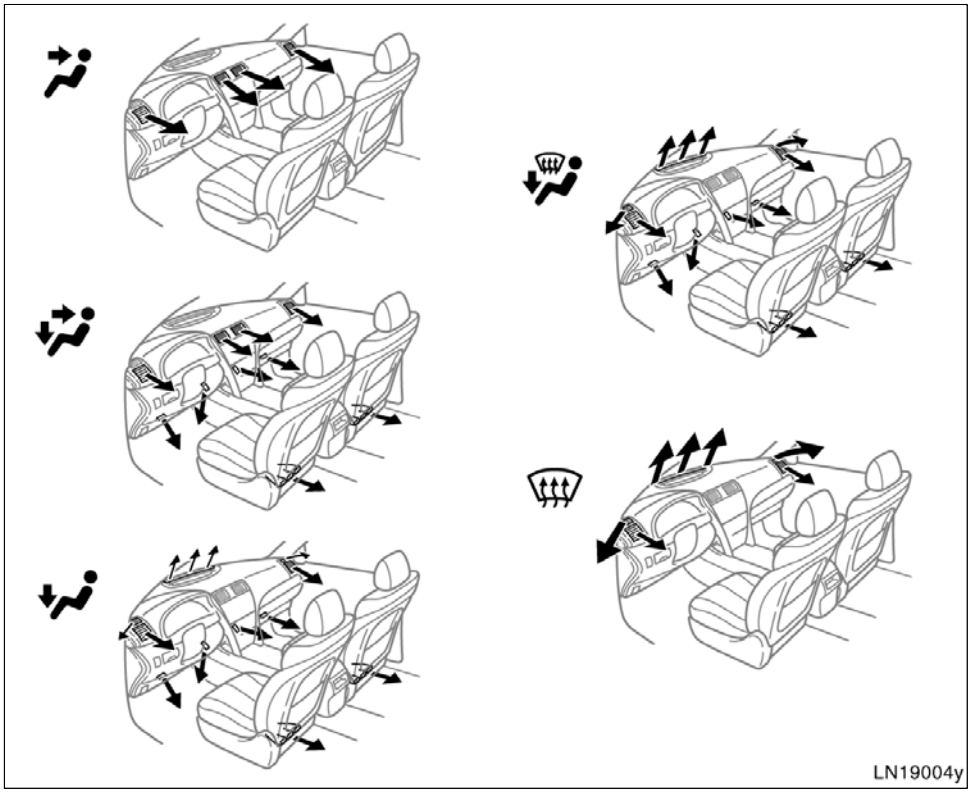

—Operating tips

- To cool off your Toyota after it has been parked in the hot sun, drive with the windows open for a few minutes. This vents the hot air, allowing the air conditioning to cool the interior more quickly.
- Make sure the air intake grilles in front of the windshield are not blocked (by leaves or snow, for example).
- On humid days, do not blow cold air on the windshield. The windshield could fog up because of the difference in air temperature on the inside and outside of the windshield.
- Keep the area under the front seats clear to allow air to circulate throughout the vehicle.
- On cold days, set the fan speed to high for a minute to help clear the intake ducts of snow or moisture. This can reduce the amount of fogging on the windows.
- When driving on dusty roads, close all windows. If dust thrown up by the vehicle is still drawn into the vehicle after closing the windows, it is recommended that the air intake selector be set to FRESH and the fan speed selector to any setting except “OFF”.

- If following another vehicle on a dusty road, or driving in windy and dusty conditions, it is recommended that the air intake selector be temporarily set to RECIRCULATE, which will close off the outside passage and prevent outside air and dust from entering the vehicle interior.

Heating

For best results, set controls as follows:

Fan speed—Any setting except “OFF”
Temperature—Towards **WARM** (red zone)
Air intake—FRESH (outside air)
Air flow—FLOOR
Air conditioning—OFF

- For quick heating, change the air intake selector mode to RECIRCULATE. To keep the windows from fogging, return to FRESH mode after the vehicle interior has been warmed.
- Press the “A/C” button on for dehumidified heating.
- Turn the air flow selector to the floor/windshield position to heat the vehicle interior while defrosting or defogging the windshield.

Air conditioning

For best results, set controls as follows:

Fan speed—Any setting except “OFF”
Temperature—Towards **COLD** (blue zone)
Air intake—FRESH (outside air)
Air flow—PANEL
Air conditioning—ON

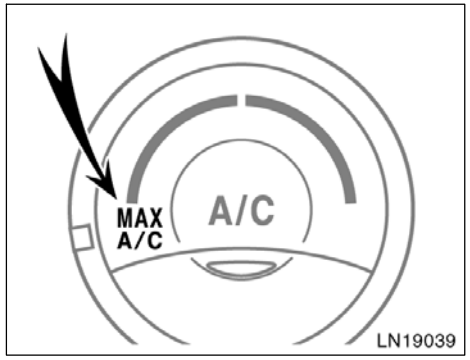

- For quick cooling, turn the temperature selector knob to the ”MAX A/C” position. The air conditioning will automatically turn on and the air intake selector will be set to RECIRCULATE.

Ventilation

For best results, set controls as follows:

Fan speed—Any setting except “OFF”
Temperature—Towards **COLD** (blue zone)
Air intake—FRESH (outside air)
Air flow—PANEL
Air conditioning—OFF

Defogging

The inside of the windshield

For best results, set controls as follows:

Fan speed—Any setting except “OFF”
Temperature—Towards **WARM** (red zone) to heat; **COLD** (blue zone) to cool
Air intake—FRESH (outside air)
Air flow—WINDSHIELD

Turning the air flow selector to the windshield position turns on the defogging function with the purpose of clearing the front view.

When turning the air flow selector to the windshield position, the air intake selector mode changes to FRESH automatically to clean up the front view quickly. It is not possible to return to RECIRCULATE in this position.

Press the “A/C” button for dehumidified heating or cooling. This setting clears the front view more quickly.

- On humid days, do not blow cold air on the windshield—the difference between the outside and inside temperatures could make the fogging worse.

Defrosting

The outside of the windshield

For best results, set controls as follows:

Fan speed—Any setting except “OFF”
Temperature—Towards **WARM** (red zone)
Air intake—FRESH (outside air)
Air flow—WINDSHIELD

Turning the air flow selector to the windshield position turns on the defrosting function with the purpose of clearing the front view.

When turning the air flow selector to the windshield position, the air intake selector mode changes to FRESH automatically to clean up the front view quickly. It is not possible to return to RECIRCULATE in this position.

Press the “A/C” button for dehumidified heating. This setting clears the front view more quickly.

- To heat the vehicle interior while defrosting the windshield, choose floor/windshield air flow.

Automatic air conditioning system——Controls

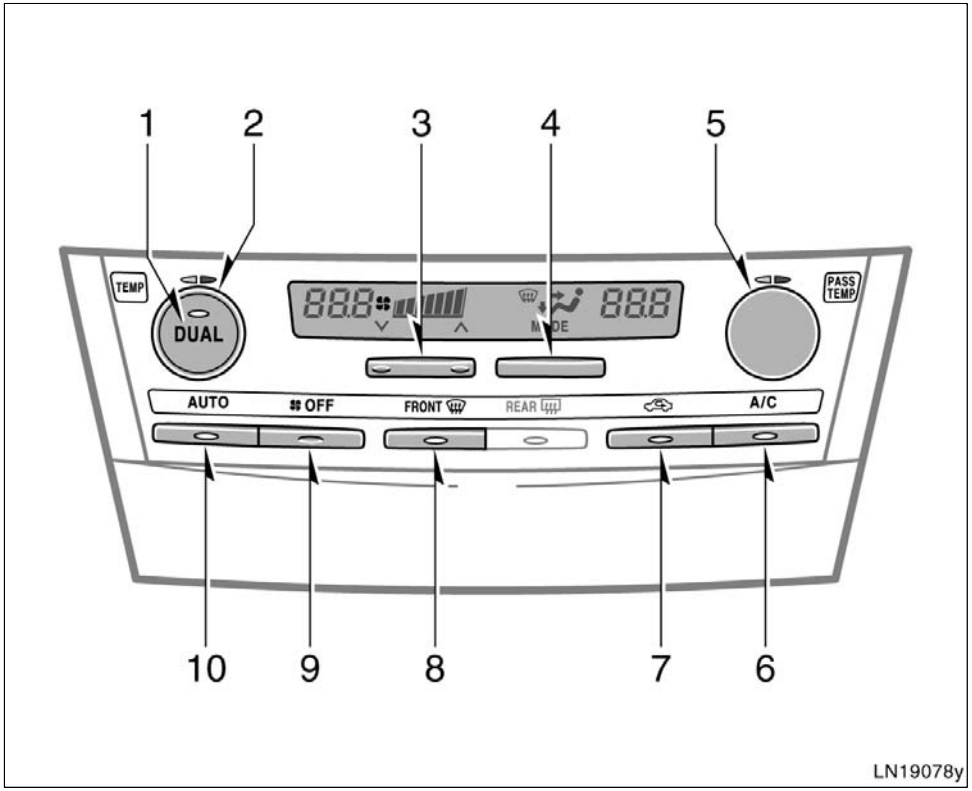

1. “DUAL” button
2. Temperature selector (“TEMP”)
   (with “DUAL” button indicator on—individual setting on driver side only)
   (with “DUAL” button indicator off—simultaneous setting on driver and front passenger)
3. Fan speed selector
4. Air flow selector button
5. Temperature selector (“PASS TEMP”) (individual setting on front passenger side only)
6. “A/C” button
7. Air intake selector
8. Windshield air flow button
9. “OFF” button
10. “AUTO” button

“AUTO” button

For automatic operation of the air conditioning, press the “AUTO” button. The “AUTO” button will turn on, indicating that the automatic operation mode has been selected.

In the automatic operation mode, the air conditioning selects the most suitable fan speed, air flow, air intake and on–off of the air conditioning according to the temperature.

When you press the “AUTO” button with the air intake mode at FRESH, internal circulation may be applied for maximum cooling.

You may use manual controls if you want to select your own settings.

Fan speed selector

Push the “∧” (increase) or “∨” (decrease) side of the button to adjust the fan speed.

In automatic operation, you do not have to adjust the fan speed unless you desire another fan speed mode.

“DUAL” button

Push the button to change the mode of the temperature setting.

With the indicator on—Individual temperature setting for driver and front passenger

With the indicator off—Simultaneous temperature setting for driver and front passenger

Temperature selectors

Turn the knob to adjust the temperature—to the right to warm, to the left to cool.

“LO” appears when you adjust to maximum cooling, and “HI” appears when you adjust to maximum warming.

—“TEMP” knob

With the “DUAL” button indicator on—This knob changes the temperature on the driver side only.

With the “DUAL” button indicator off—This knob changes the temperature on the driver side and front passenger side simultaneously. This function will be cancelled when the “PASS TEMP” knob is turned.

—“PASS TEMP” knob

This knob changes the temperature on the front passenger side only.

“OFF” button

Push the button to turn off the air conditioning system.

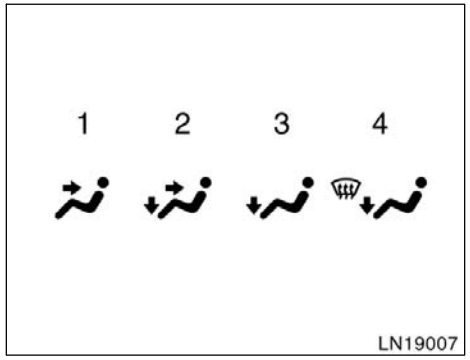

Air flow selector button

Push the button to select the vents used for air flow.

In automatic operation, you do not have to select the air flow unless you desire another air flow mode.

1. **Panel—**Air flows mainly from the instrument panel vents and the rear vents.
2. **Bi-level—**Air flows from both the floor vents, the instrument panel vents and the rear vents.
3. **Floor—**Air flows mainly from the floor vents.
4. **Floor/Windshield—**Air flows mainly from the floor vents and windshield vents.

   This position allows the air intake to select FRESH automatically. This is to clean up the front view more quickly.

   If you want to return the setting to RECIRCULATE mode, press the air intake selector button once again.

   Press the “A/C” button for dehumidified heating or cooling. This setting clears the front view more quickly.

Windshield air flow button

When this button is pressed, air flows mainly from the windshield vents and turns on the defogging function with the purpose of clearing the front view.

Pressing this button once again returns the air flow mode to the last one used.

This button allows the air intake to select FRESH automatically. This is to clean up the front view more quickly. It is not possible to return to RECIRCULATE in this mode.

Press the “A/C” button for dehumidified heating or cooling. This setting clears the front view more quickly.

For details about air flow selector settings, see “—Air flow selector settings” described below.

When any of the following conditions occurs, the indicator light on the button may flash and a motor sound may be heard. This does not indicate a malfunction.

- The ignition is set at ON after the battery is reconnected
- Engine starting and stopping is repeated at short intervals
- The engine is started with the low voltage battery

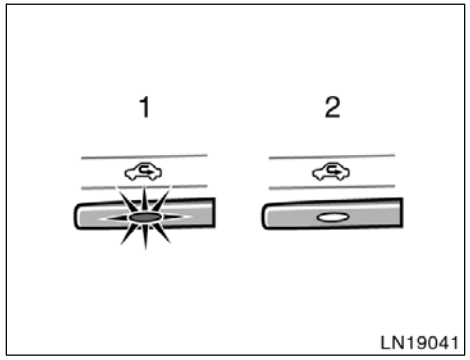

Air intake selector

Press the button to select the air source.

1. **RECIRCULATE** (indicator light is on)—Recirculates the air inside the vehicle.
2. **FRESH** (indicator light is off)—Draws outside air into the system.

To prevent fogging up of the windshield, the air intake mode may change automatically to FRESH depending on the condition of the air conditioning system.

“A/C” button

To turn on the air conditioning, press the “A/C” button. The “A/C” button indicator will come on. To turn the air conditioning off, press the button again.

If the “A/C” button indicator flashes, there is a problem in the air conditioning system and the air conditioning automatically shuts off. If this happens, take your vehicle to a Toyota dealer for service.

Plasmacluster™*

The Plasmacluster™* helps to keep good air quality in the cabin by emitting positive and negative ions into the cabin.

Operating the air conditioning system allows positive and negative ions to come out from the driver’s side vent.

A low noise may be heard during operation. This is not a malfunction.

Static electricity may be discharged near the driver’s side vent because high voltage is used to operate the system.

To clean the driver’s side vent, wipe the vent using a soft cloth after turning the system off.

⚠ CAUTION

Do not disassemble or repair the system because it contains high voltage parts. Call your Toyota dealer if the system needs repair.

NOTICE
Do not insert anything into the driver’s side vent, attach anything to it, or use sprays around the driver’s side vent. These things may cause the system not to work properly.

*: This system adopts the plasmacluster technology, manufactured under license from SHARP Corporation. “Plasmacluster™” is a trademark of SHARP Corporation.

—Air flow selector settings

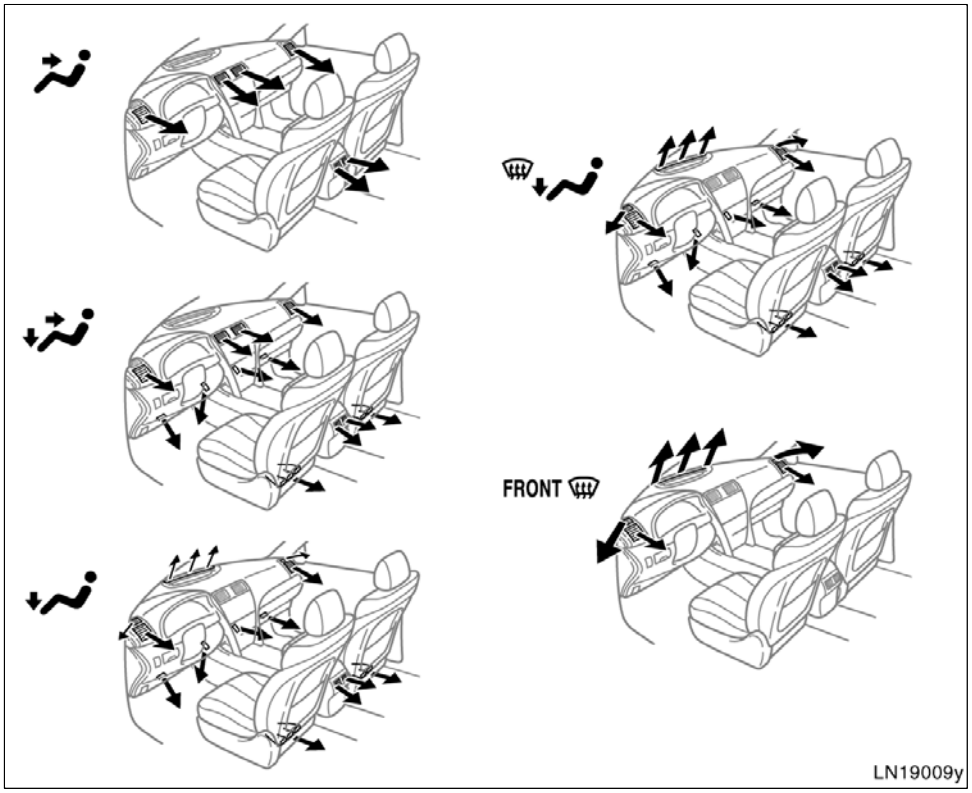

—Operating tips

- To cool off your Toyota after it has been parked in the hot sun, drive with the windows open for a few minutes. This vents the hot air, allowing the air conditioning to cool the interior more quickly.
- Make sure the air intake grilles in front of the windshield are not blocked (by leaves or snow, for example).
- On humid days, do not blow cold air on the windshield. The windshield could fog up because of the difference in air temperature on the inside and outside of the windshield.
- Keep the area under the front seats clear to allow air to circulate throughout the vehicle.
- On cold days, set the fan speed to high for a minute to help clear the intake ducts of snow or moisture. This can reduce the amount of fogging on the windows.
- When driving on dusty roads, close all windows. If dust thrown up by the vehicle is still drawn into the vehicle after closing the windows, it is recommended that the air intake selector be set to FRESH and the fan speed selector to any setting except “OFF”.

- If following another vehicle on a dusty road, or driving in windy and dusty conditions, it is recommended that the air intake selector be temporarily set to RECIRCULATE, which will close off the outside passage and prevent outside air and dust from entering the vehicle interior.

Heating

For best results, set controls as follows:

For automatic operation—

Press in the “AUTO” button.
Temperature—To the desired temperature
Air intake—FRESH (outside air)
Air conditioning—OFF

For manual operation—

Fan speed—To the desired fan speed
Temperature—Towards **WARM**
Air intake—FRESH (outside air)
Air flow—FLOOR
Air conditioning—OFF

- For quick heating, select recirculated air for a few minutes. To keep the windows from fogging, select fresh after the vehicle interior has been warmed.
- Press the “A/C” button on for dehumidified heating.
- Choose floor/windshield air flow to heat the vehicle interior while defrosting or defogging the windshield.

Air conditioning

For best results, set controls as follows:

For automatic operation—

Press in the “AUTO” button.
Temperature—To the desired temperature
Air intake—FRESH (outside air)
Air conditioning—ON

For manual operation—

Fan speed—To the desired fan speed
Temperature—Towards **COLD**
Air intake—FRESH (outside air)
Air flow—PANEL
Air conditioning—ON

- For quick cooling, select recirculated air for a few minutes.

Ventilation

For best results, set controls as follows:

For automatic operation—

Press in the “AUTO” button.
Temperature—Towards low temperature
Air intake—FRESH (outside air)
Air conditioning—OFF

For manual operation—

Fan speed—To the desired fan speed
Temperature—Towards **COLD**
Air intake—FRESH (outside air)
Air flow—PANEL
Air conditioning—OFF

Defogging and defrosting

—The inside of the windshield

For best results, set controls as follows:

—For automatic operation

Temperature—Towards high temperature to heat; low temperature to cool
Air intake—FRESH (outside air)
Air flow—WINDSHIELD

—For manual operation

Fan speed—To the desired fan speed
Temperature—Towards high temperature to heat; low temperature to cool
Air intake—FRESH (outside air)
Air flow—WINDSHIELD

Pressing the windshield air flow button turns on the defogging function with the purpose of clearing the front view.

When pressing the windshield air flow button, the air intake selects FRESH automatically. This is to clean up the front view more quickly. It is not possible to return to RECIRCULATE in this mode.

Press the “A/C” button for dehumidified heating or cooling. This setting clears the front view more quickly.

- On humid days, do not blow cold air on the windshield—the difference between the outside and inside temperatures could make the fogging worse.

—The outside of the windshield

For best results, set controls as follows:

—For automatic operation

Temperature—Towards high temperature
Air intake—FRESH (outside air)
Air flow—WINDSHIELD

—For manual operation

Fan speed—To the desired fan speed
Temperature—Towards high temperature
Air intake—FRESH (outside air)
Air flow—WINDSHIELD

Pressing the windshield air flow button turns on the defrosting function with the purpose of clearing the front view.

When pressing the windshield air flow button, the air intake selects FRESH automatically. This is to clean up the front view more quickly. It is not possible to return to RECIRCULATE in this mode.

Press the “A/C” button for dehumidified heating or cooling. This setting clears the front view more quickly.

- To heat the vehicle interior while defrosting the windshield, choose floor/windshield air flow.

Climate remote controls (steering switches)

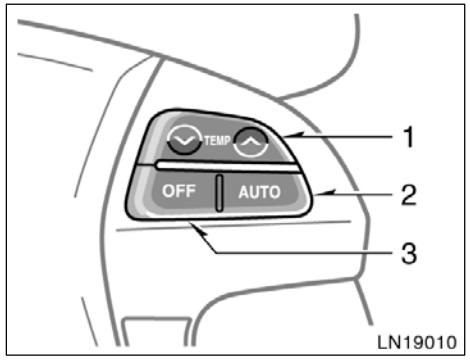

Some parts of the air conditioning system can be adjusted using the switches on the steering wheel.

Details of the specific switches, controls, and features are described below.

1. Temperature selector (“TEMP”)
   (with “DUAL” button indicator on—individual setting on driver side only)
   (with “DUAL” button indicator off—simultaneous setting on driver and front passenger)
2. “AUTO” button
3. “OFF” button

“AUTO” button

For automatic operation of the air conditioning, press the “AUTO” button. The “AUTO” button will turn on, indicating that the automatic operation mode has been selected.

In the automatic operation mode, the air conditioning selects the most suitable fan speed, air flow, air intake and on–off of the air conditioning according to the temperature.

When you press the “AUTO” button with the air intake mode at FRESH, internal circulation may be applied for maximum cooling.

You may use manual controls if you want to select your own settings.

Temperature selector

To increase the temperature, press the “∧” side. To decrease it, press the “∨” side.

“LO” appears when you adjust to maximum cooling, and “HI” appears when you adjust to maximum warming.

With the “DUAL” button indicator on—This button changes the temperature on the driver side only.

With the “DUAL” button indicator off—This button changes the temperature on the driver side and front passenger side simultaneously.

This function will be cancelled when the “PASS TEMP” knob on the instrument panel is turned.

“OFF” button

Push the “OFF” button to turn off the air conditioning system.

Side and rear vents

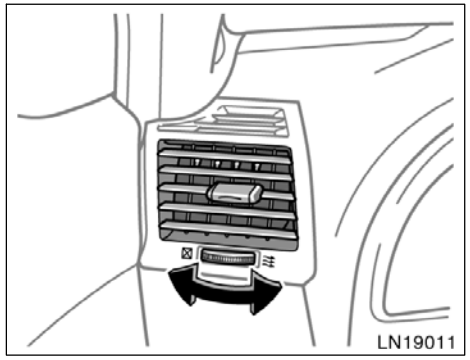

Side vents

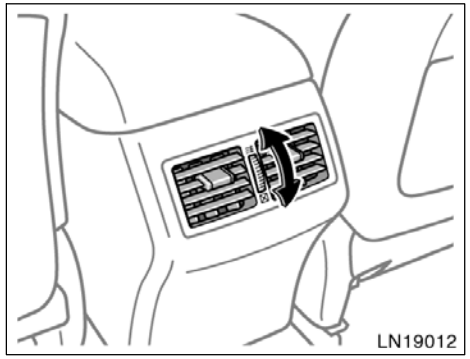

Rear vents

If air flow control is not satisfactory, check the side and rear vents. The side and rear vents may be opened or closed as shown.

Air conditioning filter—

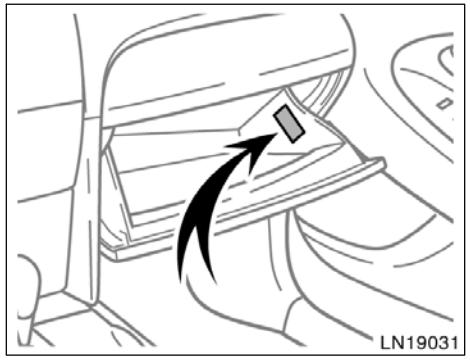

The air conditioning filter information label is placed inside of the glove box as shown and indicates that a filter has been installed.

The air conditioning filter prevents dust from entering the vehicle through the air conditioning vent.

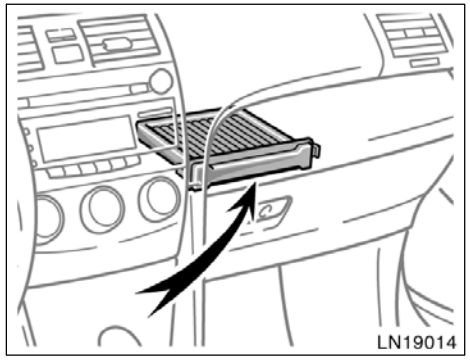

The air conditioning filter is behind the glove box.

—Checking and replacing the air conditioning filter

The air conditioning filter may clog after long use. The filter may need to be replaced if the air flow of the air conditioning and heater experiences extreme reductions in operating efficiency, or if the windows begin to fog up easily in FRESH mode.

To maintain the air conditioning efficiency, inspect and replace the air conditioning filter according to the maintenance schedule. In dusty areas or areas with heavy traffic flow, such as inner city or desert areas, early replacement may be required. (For scheduled maintenance information, please refer to the “Scheduled Maintenance Guide” or “Owner’s Manual Supplement”.)

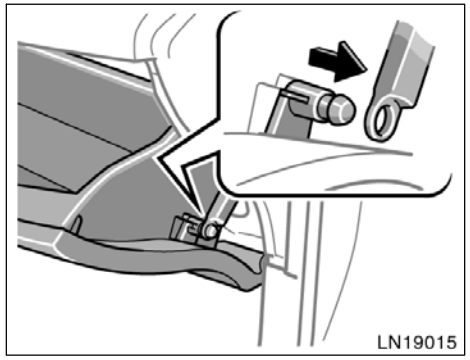

1. Open the glove box, and slide off the damper as shown.

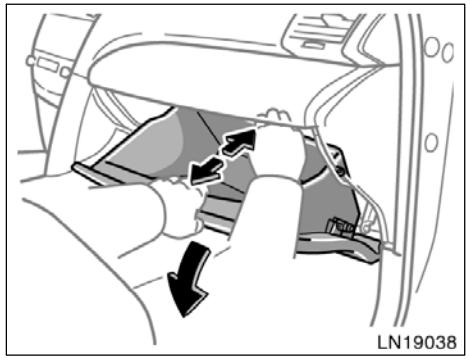

2. Apply pressure to the glove box as shown to disengage the claws.

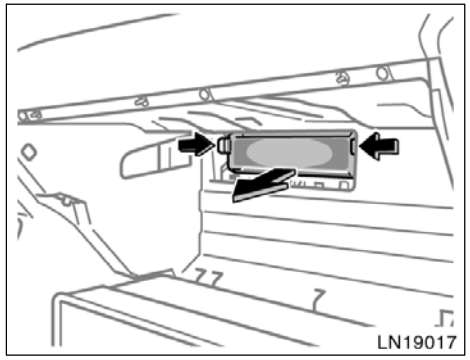

3. Remove the filter cover while pushing in both ends of the cover.

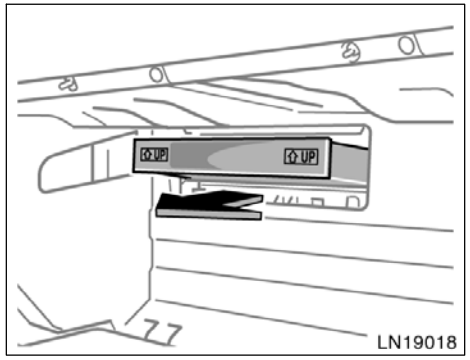

4. Pull the filter out of the filter outlet. Inspect the filter on the surface.

If it is dirty, it should be replaced.

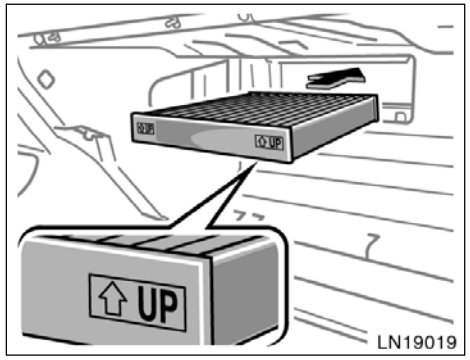

When inserting the filter in the filter outlet, keep the arrow pointing up.

INFORMATION

The air filter should be installed properly in position. The use of air conditioning with the air filter removed may cause deteriorated dustproof performance and then affect air conditioning performance.

SECTION 1 – 10

OPERATION OF INSTRUMENTS AND CONTROLS

Other equipment

Clock 266
Compass 266
Power outlets 270
Garage door opener 271
Portable ashtray 275
Glove box 275
Auxiliary boxes 277
Rear console box 278
Front cup holder 279
Rear cup holder 280
Storage box 281
Grocery bag hooks 281
Cargo net 282
Rear sun shade 282
Floor mat 282

Clock

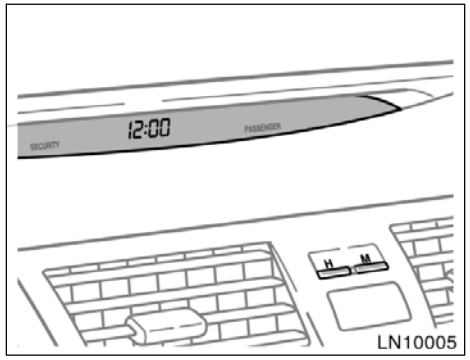

To reset the hour: Push the “H” button.
To reset the minutes: Push the “M” button.

The ignition switch must be set at ACC or ON position.

If the electrical power source has been disconnected from the clock, the time display will automatically be set to 1:00 (one o’clock).

When the instrument panel lights are turned on, the brightness of the time indicator will be reduced.

Compass

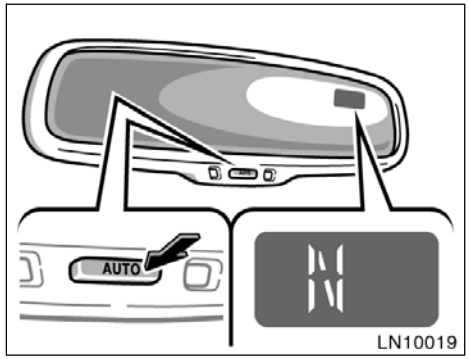

The direction is indicated on the inside rear view mirror.

If the ignition switch was turned off with the system on, the system will automatically turn back on when the ignition switch is turned on.

Push the “AUTO” switch for longer than 3 seconds to turn the compass system on and off.

The compass indicates the direction that the vehicle is heading. In the above case, it shows that the vehicle is heading north.

Displays	Directions
N	North
NE	Northeast
E	East
SE	Southeast
S	South
SW	Southwest
W	West
NW	Northwest

The compass may not show the correct direction in the following conditions:

- The vehicle is stopped immediately after turning.
- The compass does not adjust while the vehicle is stopped.
- The ignition switch is turned off immediately after turning.
- The vehicle is on an inclined surface.
- The vehicle is in a place where the earth’s magnetic field is subject to interference by artificial magnetic fields (underground parking, under a steel tower, between buildings, roof parking, near a crossing, near a large vehicle, etc.).

- The vehicle is magnetized. (There is a magnet or a metal object on or near the inside rear view mirror.)
- The battery has been disconnected.

If your vehicle is out of the set zone, refer to “CALIBRATING THE COMPASS” below to set the zone number.

If the deviation is small, the compass works to calibrate the direction automatically while the vehicle is in motion.

For additional precision or for complete calibrating, see “CALIBRATING THE COMPASS” below.

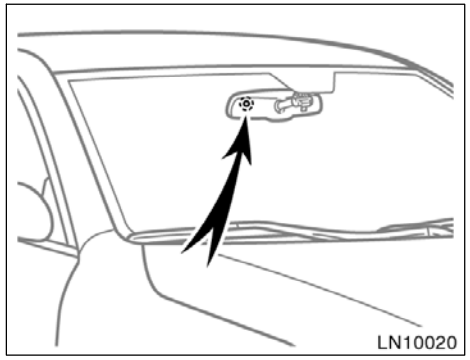

The compass sensor is in the inside rear view mirror.

NOTICE
Do not put magnets or a metal object on or near the inside rear view mirror of the vehicle. Doing this may cause malfunction of the compass sensor.

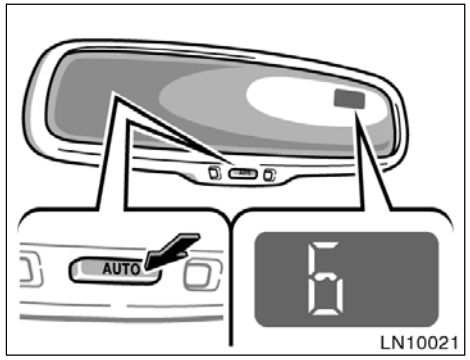

CALIBRATING THE COMPASS (deviation calibration)

The direction display on the compass deviates from the true direction determined by the earth’s magnetic field. The angle of deviation varies according to the geographic position of the vehicle.

To adjust this deviation, stop the vehicle, then push and hold the switch until the zone number appears on the display.

Then push the switch, referring to the following map to select the number of the zone where the vehicle is.

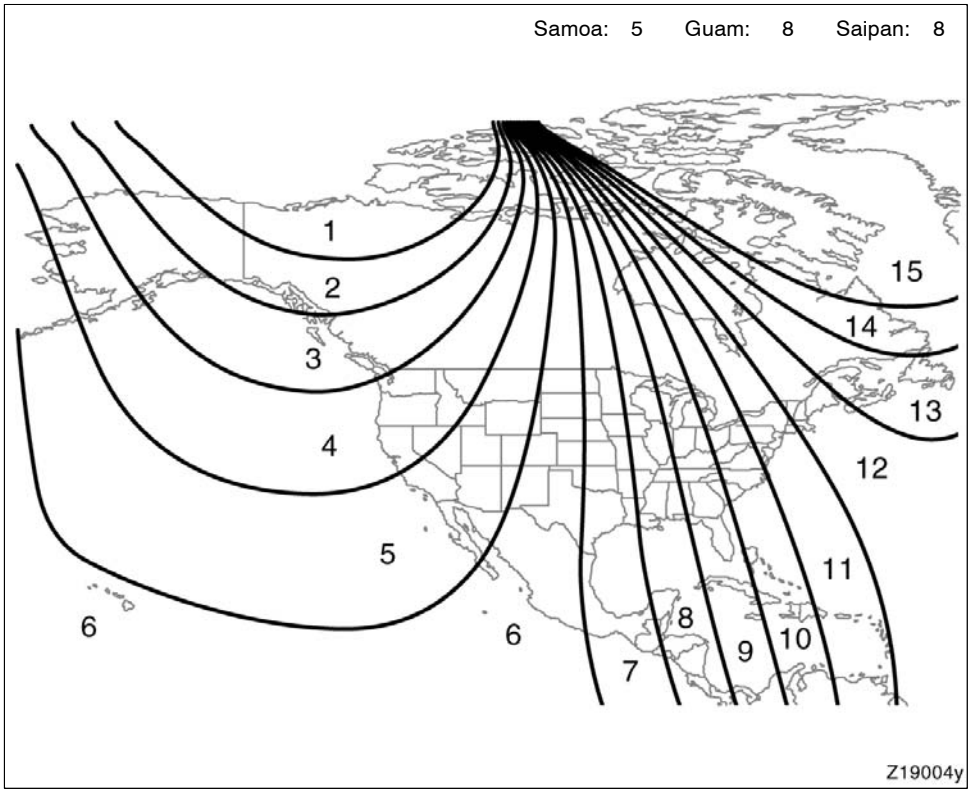

Zone number

After calibration, leaving the system for several seconds returns it to the compass mode.

⚠ CAUTION

Do not adjust the display while the vehicle is moving. Be sure to adjust the display only when the vehicle is stopped.

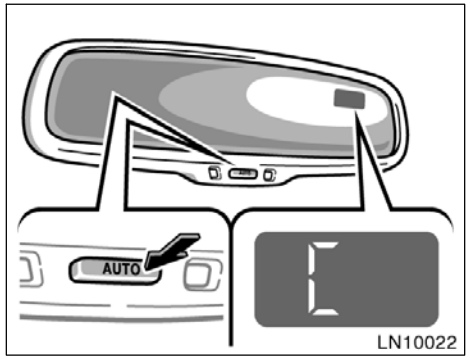

CALIBRATING THE COMPASS (circling calibration)

Sometimes the direction display on the compass may not change after a turn. To rectify this, stop the vehicle and push and hold the switch until “C” appears on the display.

If “C” appears on the display because of a drastic change in the magnetic field, perform circling calibration.

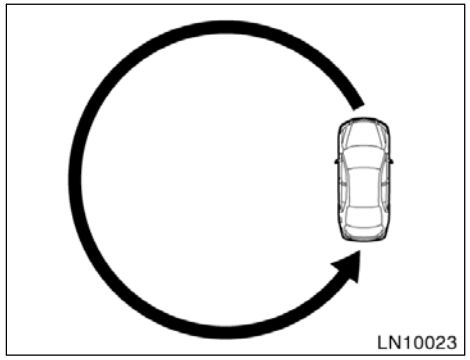

Drive the vehicle in a circle at 8 km/h (5 mph) or less. If there is not enough space to drive in a circle, drive around the block.

After driving 1 to 3 circles in the above method, calibration is completed when the direction is shown on the display.

If calibration cannot be performed because of the magnetized vehicle etc., take your vehicle to Toyota dealer.

Perform circling calibration just after you have purchased your Toyota. And then always perform circling calibration after the battery has been removed, replaced or disconnected.

- Do not perform circling calibration of the compass in a place where the earth’s magnetic field is subject to interference by artificial magnetic fields (underground parking, under a steel tower, between buildings, roof parking, near a crossing, near a large vehicle, etc.).
- During calibration, do not operate electric systems (moon roof, power windows, etc.) as they may interfere with the calibration.

CAUTION

- **When doing the circling calibration, be sure to secure a wide space, and watch out for people and vehicles in the neighborhood. Do not violate any local traffic rules while performing circling calibration.**
- **Do not adjust the display while the vehicle is moving. Be sure to adjust the display only when the vehicle is stopped.**

Power outlets

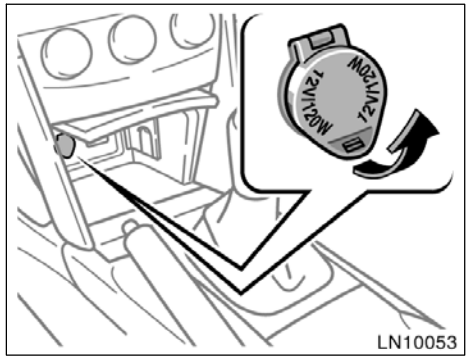

Front console

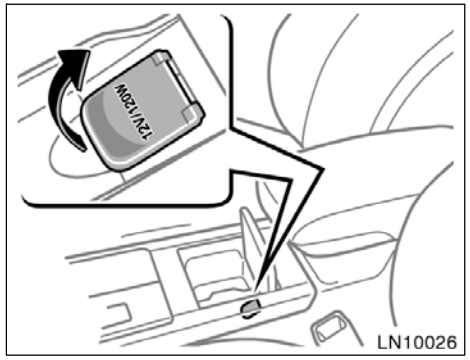

Center console (type B)

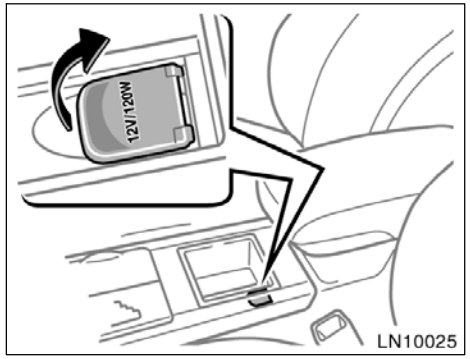

Center console (type A)

The power outlets are designed for power supply for car accessories.

The ignition switch must be set at ACC or ON for the power outlet to be used.

Front console power outlet—Connected cables can be passed through the hole to the front passenger side of the auxiliary box. For details, see “Auxiliary boxes” on page 277 in this Section.

NOTICE

- ***To prevent the fuse from being blown, do not use the electricity over the total vehicle capacity of 12V/120W.***
- ***To prevent the battery from being discharged, do not use the power outlets longer than necessary when the engine is not running.***
- ***Close the power outlet lids when the power outlets are not in use. Inserting anything other than an appropriate plug that fits the outlet, or allowing any liquid to get into the outlet may cause electrical failure or short circuits.***

Garage door opener

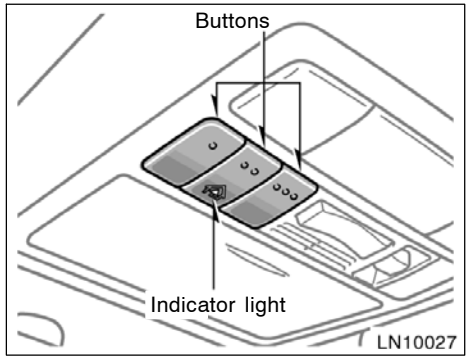

The garage door opener (HomeLink® Universal Transceiver) is manufactured under license from HomeLink® and can be programmed to operate garage doors, gates, entry doors, door locks, home lighting systems, and security systems, etc.

(a) Programming the HomeLink®

The HomeLink® in your vehicle has 3 buttons and you can store one program for each button.

To ensure correct programming into the HomeLink®, install a new battery in the hand–held transmitter prior to programming.

The battery side of the hand–held transmitter must be pointed away from the HomeLink® during the programming process.

For Canadian users, follow the procedure in “Programming an entrance gate/programming all devices in the Canadian market”.

1. Decide which of 3 HomeLink® buttons you want to program.

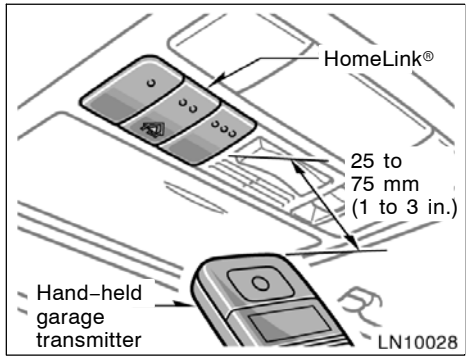

2. Place your hand–held garage transmitter 25 to 75 mm (1 to 3 in.) away from the surface of the HomeLink®.

Keep the indicator light on the HomeLink® in view while programming.

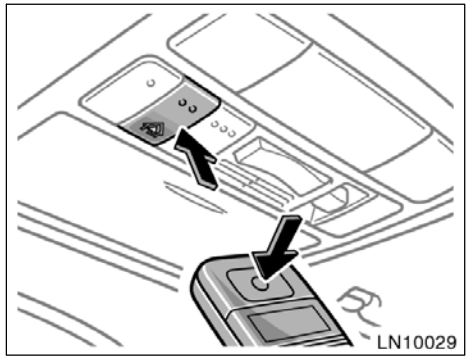

3. Simultaneously press and hold the hand–held garage transmitter button along with the selected HomeLink® button.

Do not release the buttons until step 4 has been completed.

4. When the indicator light on the HomeLink® changes from a slow to a rapid flash after 20 seconds, you can release both buttons.

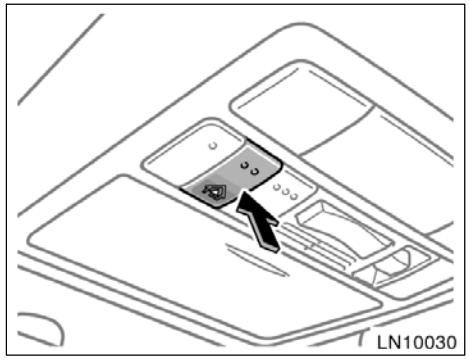

5. Test the operation of the HomeLink® by pressing the newly programmed button. If programming a garage door opener, check to see if the garage door opens and closes.

If the garage door does not operate, identify if your garage transmitter is of the “Rolling Code” type. Press and hold the programmed HomeLink® button. The garage door has the rolling code feature if the indicator light (on the HomeLink®) flashes rapidly and then remains lit after 2 seconds. If your garage transmitter is the “Rolling Code” type, proceed to the heading “Programming a rolling code system”.

6. Repeat steps 2 through 5 for each remaining HomeLink® button to program another device.

Programming a rolling code system

If your device is “Rolling Code” equipped, it is necessary to follow steps 1 through 4 under the heading “Programming the HomeLink®” before proceeding with the steps listed below.

1. Locate the “training” button on the ceiling mounted garage door opener motor. The exact location and color of the button may vary by brand of garage door opener. Refer to the owner’s guide supplied by the garage door opener manufacturer for the location of this “training” button.
2. Press the “training” button on the ceiling mounted garage door opener motor.

Following this step, you have 30 seconds in which to initiate step 3 below.

3. Press and release the vehicle’s programmed HomeLink® button twice. The garage door may open. If the door does open, the programming process is complete. If the door does not open, press and release the button a third time. This third press and release will complete the programming process by opening the garage door.

The ceiling mounted garage door opener motor should now recognize the HomeLink® unit and be able activate the garage door up/down.

4. Repeat steps 1 through 3 for each remaining HomeLink® button to program another rolling code system.

Programming an entrance gate/programming all devices in the Canadian market

1. Decide which of the 3 HomeLink® buttons you want to program.
2. Place your hand–held gate/device transmitter 25 to 75 mm (1 to 3 in.) away from the surface of the HomeLink®.

Keep the indicator light on the HomeLink® in view while programming.

3. Press and hold the selected HomeLink® button.
4. Continuously press and release (cycle) the hand–held gate/device transmitter button every two seconds until step 5 is complete.
5. When the indicator light on the HomeLink® changes from a slow to a rapid flash after 20 seconds, you can release both buttons.
6. Test the operation of the HomeLink® by pressing the newly programmed button. Check to see if the gate/device operates correctly.
7. Repeat steps 1 through 6 for each remaining HomeLink® button to program another device.

Programming other devices

To program other devices such as home security systems, home door locks or lighting, contact your authorized Toyota dealer for assistance.

Reprogramming a button

Individual HomeLink® buttons cannot be erased, however, to reprogram a single button, follow the procedure “Programming the HomeLink®”.

(b) Operating the HomeLink®

To operate the HomeLink®, press the appropriate HomeLink® button to activate the programmed device. The HomeLink® indicator light should come on. The HomeLink® continues to send the signal for up to 20 seconds as long as the button is pressed.

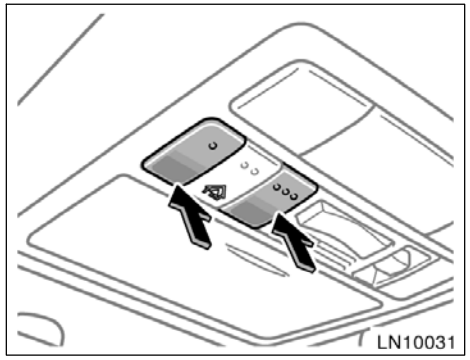

(c) Erasing the entire HomeLink® memory (all three programs)

To erase all previously programmed codes at one time, press and hold down the 2 outside buttons for 20 seconds until the indicator light flashes.

If you sell your vehicle, be sure to erase the programs stored in the HomeLink® memory.

For additional programming assistance with your HomeLink® Universal Transceiver call the:

- Toyota Customer Experience Center at 1–800–331–4331 (U.S.A.)
- Toyota Canada Customer Interaction Centre at 1–888–869–6828 (Canada)

Refer to HomeLink® on the internet at: WWW.HOMELINK.COM

⚠ CAUTION

- **When programming the HomeLink® Universal Transceiver, you may be operating a garage door or other device. Make sure people and objects are out of the way of the garage door or other device to prevent potential harm or damage.**
- **Do not use this HomeLink® Universal Transceiver with any garage door opener that lacks the safety stop and reverse feature as required by federal safety standards. (This includes any garage door opener model manufactured before April 1, 1982.) A garage door opener which cannot detect an object (signaling the door to stop and reverse), does not meet current federal safety standards. Using a garage door opener without these features increases risk of serious injury or death.**

This device complies with Part 15 of the FCC Rules and with RSS–210 of the IC Rules. Operation is subject to the following two conditions: (1) This device may not cause harmful interference, and (2) this device must accept any interference received, including interference that may cause undesired operation.

WARNING: This transmitter has been tested and complies with FCC and IC rules. Changes or modifications not expressly approved by the party responsible for compliance could void the user’s authority to operate the device.

Portable ashtray

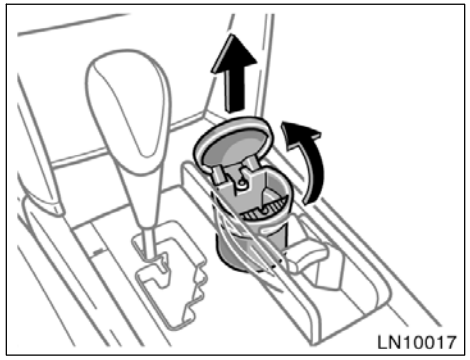

The ashtray can be removed and used outside the vehicle. To use the ashtray, raise the lid.

When finished with your cigarette, thoroughly extinguish it in the ashtray to prevent other cigarette butts from catching fire. After using the ashtray, close the lid completely.

The cup holder lid cannot be closed while the ashtray is installed.

To detach the ashtray, pull it out.

⚠ CAUTION

To reduce the chance of injury in case of an accident or sudden stop while driving, always completely close the ashtray after use.

Glove box

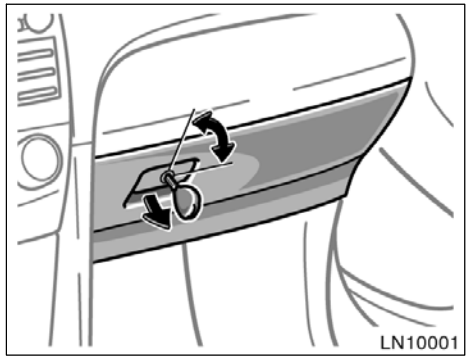

To use the glove box:

Open by pulling the lever.

Lock by inserting the master key (vehicles with key cylinder–type ignition switch) or mechanical key (vehicles with smart key system) and turning it clockwise.

Unlock by inserting the master key (vehicles with key cylinder–type ignition switch) or mechanical key (vehicles with smart key system) and turning it counterclockwise.

With the instrument panel lights on, the glove box light will come on when the glove box is open.

⚠ CAUTION

To reduce the chance of injury in case of an accident or a sudden stop, always keep the glove box door closed while driving.

Auxiliary boxes

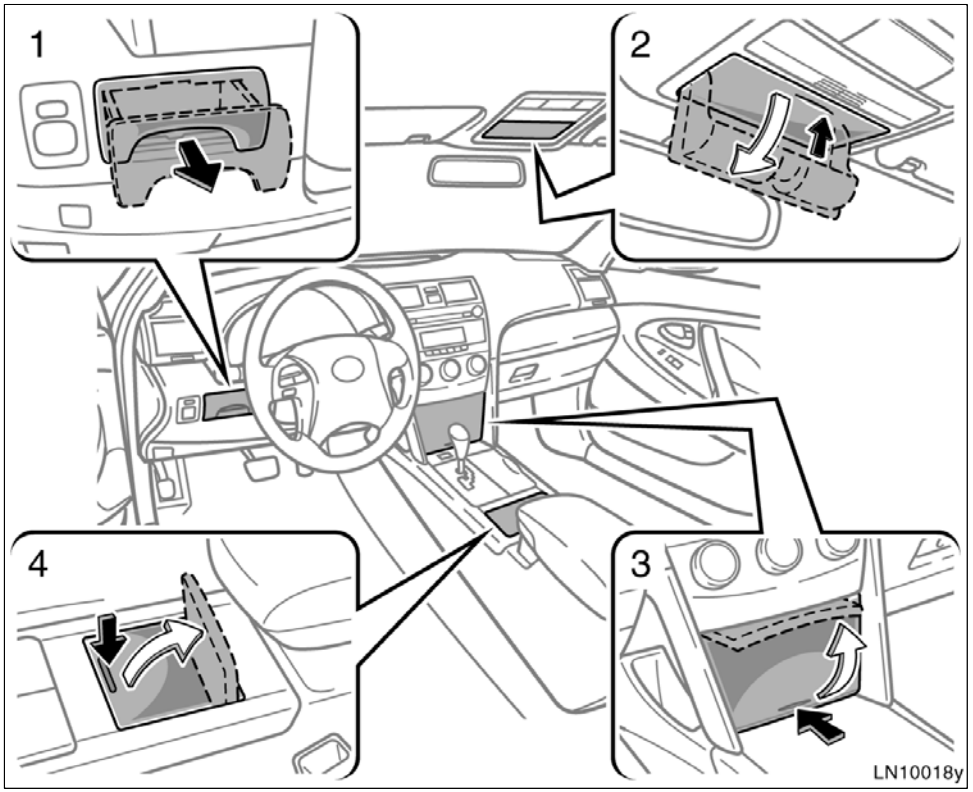

To use the boxes, open it as shown the illustration.

1. Driver’s side instrument panel
2. Overhead console
3. Front console
4. Center console (on some models)

⚠ CAUTION

To reduce the chance of injury in case of an accident or a sudden stop, always keep the auxiliary box closed while driving.

NOTICE

Overhead console box—During hot weather, the interior of the vehicle becomes very hot. Do not leave anything flammable or deformable such as a lighter, glasses, etc. inside.

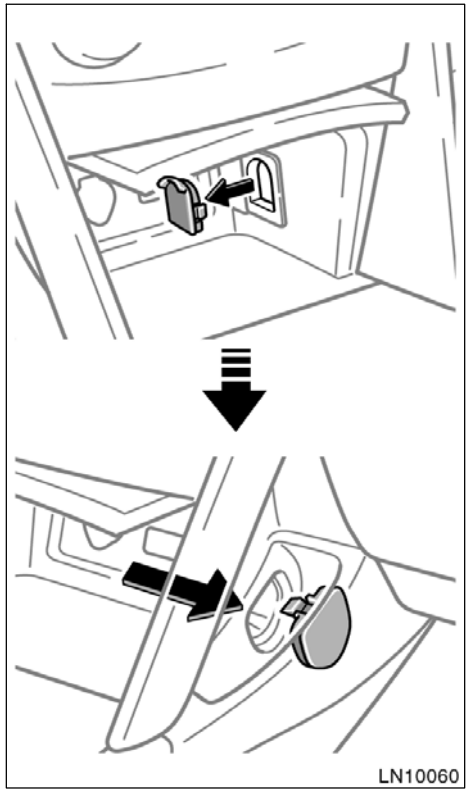

CABLE PASS–THROUGH

The auxiliary box of the front console is provided with a hole that allows cables to be passed into the cabin from the inside power outlet and AUX adapter.

To open the hole, perform the following procedure:

1. Remove the lid on the inside of the auxiliary box.
2. From the inside of the auxiliary box, push out and remove the outer lid.

Be careful not to lose the removed lids.

Rear console box

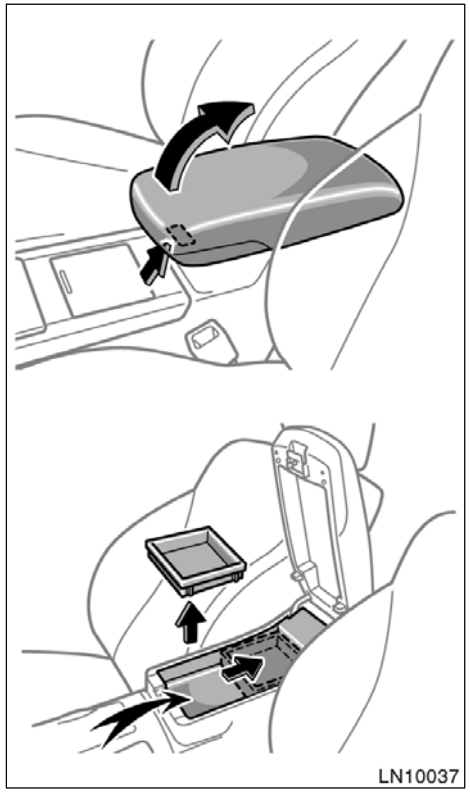

To open the console box, push the lock release button and raise the console box lid.

The upper tray slides forward/backward and can be removed.

⚠ CAUTION

To reduce the chance of injury in case of an accident or a sudden stop, always keep the console box closed while driving.

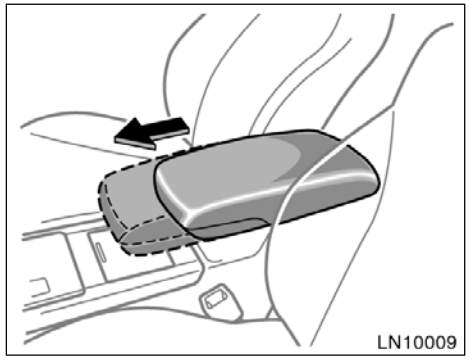

On some models—It is possible to use the rear console box lid as an armrest by moving it. To move it, grasp the front of the lid and pull forward as shown in the illustration.

When using the console box, return the lid to its original position.

Front cup holder

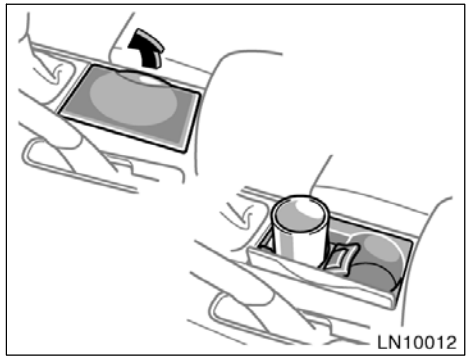

Manual transmission models

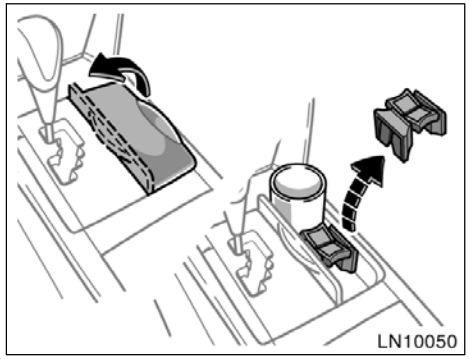

Automatic transmission models (type A)

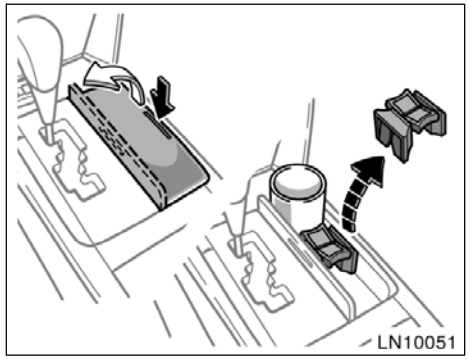

Automatic transmission models (type B)

The cup holder is designed for holding cups or drink–cans securely. To use them, open it as shown the illustration.

Automatic transmission models—The adapter for front cup holder is detachable. Replace it in its original position when using the front cup holder. Otherwise the drinks will not be held securely.

⚠ CAUTION

- **Do not place anything else other than cups or drink–cans in the cup holder, as such items may be thrown about in the compartment and possibly injure people in the vehicle during sudden braking or in an accident.**
- **To reduce the chance of injury in case of an accident or sudden stop while driving, keep the cup holder closed when it is not in use.**

Rear cup holder

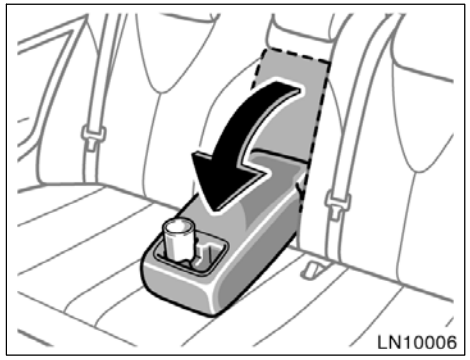

Type A

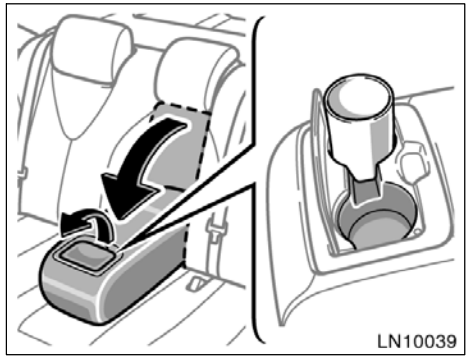

Type B

The cup holder is designed for holding cups or drink–cans securely. To use it, pull down the armrest.

Type B only—To use the cup holder, pull the lid up.

⚠ CAUTION

- **Do not place anything else other than cups or drink–cans in the cup holder, as such items may be thrown about in the compartment and possibly injure people in the vehicle during sudden braking or in an accident.**
- **Do not lift the armrest upright when the cup holder is in use.**

Storage box

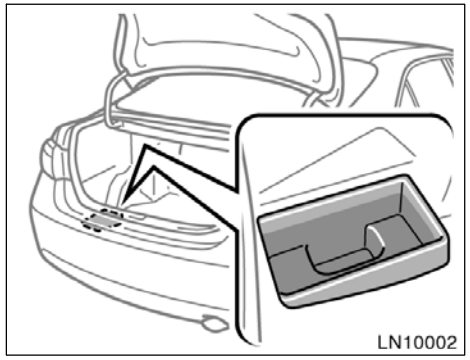

This box is designed to hold things like a large–sized bottle.

Grocery bag hooks

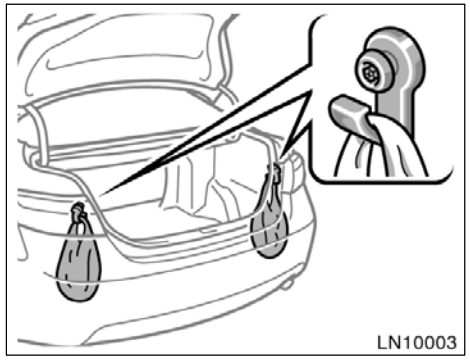

This hook is designed to hang things like grocery bags.

NOTICE

To prevent damage to the hook, avoid hanging heavy loads on it.

Cargo net

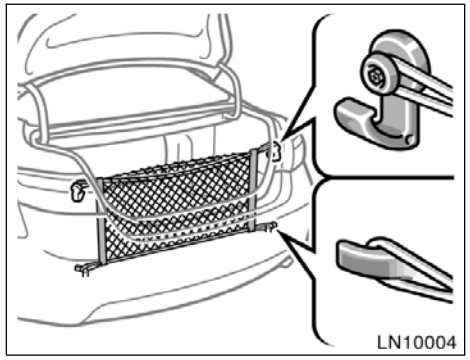

To secure belongings, hang the cargo net on the hooks.

NOTICE

- ***Do not use the net to secure sharp or heavy objects. The net will tear off.***
- ***Be sure not to twist the net when hooking.***

Rear sun shade

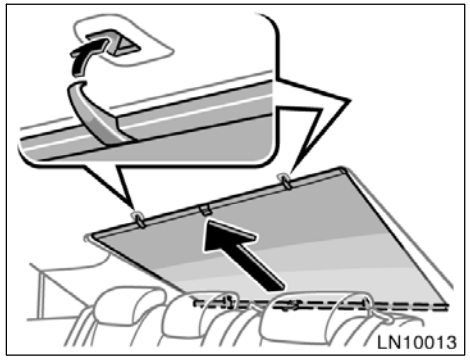

To raise the rear sun shade, pull the tab of the shade and hook it on the anchors. To lower the shade, pull the tab slightly to unhook the shade, and lower it slowly.

NOTICE

Observe the following, otherwise damage and/or failure may result:

- ***Do not place anything where they may hinder the opening/closing of the shade.***
- ***Do not place things on the shade.***

Floor mat

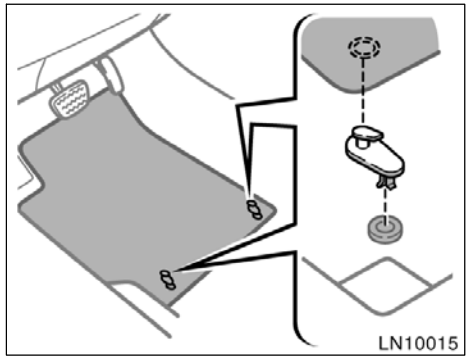

Use a floor mat of the correct size.

If the vehicle carpet and floor mat have 2 holes, then they are designed for use with locking clips. Attach the floor mat to the vehicle carpet using the clips. Lock the clips into the holes in the vehicle carpet.

CAUTION

Make sure the floor mat is properly placed on the vehicle carpet. If the floor mat slips and interferes with the movement of the pedals during driving, it may cause an accident.

SECTION 2

INFORMATION BEFORE DRIVING YOUR TOYOTA

Information before driving your Toyota

Break–in period 286
Fuel 286
Fuel pump shut off system 288
Operation in foreign countries 288
Three–way catalytic converters 289
Engine exhaust cautions 290
Facts about engine oil consumption 291
Iridium–tipped spark plugs 292
Long reach iridium–tipped spark plugs 292
Brake system 293
Brake pad wear limit indicators 297
Your Toyota’s identification 297
Theft prevention labels 299
Suspension and chassis 299
Tire information 300
Vehicle load limits 310
Cargo and luggage 310
Types of tires 313

Break–in period

Drive gently and avoid high speeds.

Your vehicle does not need an elaborate break–in. But following a few simple tips for the first 1600 km (1000 miles) can add to the future economy and long life of your vehicle:

- Avoid full throttle acceleration when starting and driving.
- Avoid racing the engine.
- Try to avoid hard stops during the first 300 km (200 miles).
- Do not drive slowly with the manual transmission in a high gear.
- Do not drive for a long time at any single speed, either fast or slow.
- Do not tow a trailer during the first 800 km (500 miles).

Fuel

FUEL TYPE

Your new vehicle must use only unleaded gasoline.

To help prevent gas station mix–ups, your Toyota has a smaller fuel tank opening. The special nozzle on pumps with unleaded fuel will fit it, but the larger standard nozzle on pumps with leaded gas will not.

At a minimum, the gasoline you use should meet the specifications of ASTM D4814 in the U.S.A. and CGSB 3.5–M93 in Canada.

NOTICE

Do not use leaded gasoline. Use of leaded gasoline will cause the three–way catalytic converter to lose its effectiveness and the emission control system to function improperly. Also, this can increase maintenance costs.

OCTANE RATING

Select Octane Rating 87 (Research Octane Number 91) or higher.

Use of unleaded gasoline with an octane rating or research octane number lower than stated above will cause persistent heavy knocking. If it is severe, this will lead to engine damage.

If your engine knocks...

If you detect heavy knocking even when using the recommended fuel, or if you hear steady knocking while holding a steady speed on level roads, consult your Toyota dealer.

However, occasionally, you may notice light knocking for a short time while accelerating or driving up hills. This is normal and there is no need for concern.

GASOLINE CONTAINING DETERGENT ADDITIVES

Toyota recommends the use of gasoline that contains detergent additives to avoid build–up of engine deposits.

However, all gasoline sold in the U.S. contains detergent additives to keep clean and/or clean intake systems.

QUALITY GASOLINE

Automotive manufacturers in the U.S., Europe and Japan have developed a specification for quality fuel named World–Wide Fuel Charter (WWFC) that is expected to be applied world wide. The WWFC consists of four categories that depend on required emisvels. In the U.S., category 4 has been adopted. The WWFC improves air quality by providing for better emissions in vehicle fleets, and customer satisfaction through better vehicle performance.

CLEANER BURNING GASOLINE

Cleaner burning gasoline, including reformulated gasoline that contains oxygenates such as ethanol or MTBE is available in many areas.

Toyota recommends the use of cleaner burning gasoline and appropriately blended reformulated gasoline. These types of gasoline provide excellent vehicle performance, reduce vehicle emissions, and improve air quality.

OXYGENATES IN GASOLINE

Toyota allows the use of oxygenate blended gasoline where the oxygenate content is up to 10% ethanol or 15% MTBE. If you use gasohol in your Toyota, be sure that it has an octane rating no lower than 87.

Toyota does not recommend the use of gasoline containing methanol.

GASOLINE CONTAINING MMT

Some gasoline contain an octane enhancing additive called MMT (Methylcyclopentadienyl Manganese Tricarbonyl).

Toyota does not recommend the use of gasoline that contains MMT. If fuel containing MMT is used, your emission control system may be adversely affected. The Malfunction Indicator Lamp on the instrument cluster may come on. If this happens, contact your Toyota dealer for service.

GASOLINE QUALITY

In a very few cases, you may experience driveability problems caused by the particular gasoline that you are using. If you continue to have unacceptable driveability, try changing gasoline brands. If this does not rectify your problem, then consult your Toyota dealer.

NOTICE

- ***Do not use gasohol other than stated above. It will cause fuel system damage or vehicle performance problems.***
- ***If driveability problems are encountered (poor hot starting, vaporizing, engine knock, etc.), discontinue the use.***
- ***Take care not to spill gasohol during refueling. Gasohol may cause paint damage.***

FUEL TANK CAPACITY

70 L (18.5 gal., 15.4 Imp. gal.)

Fuel pump shut off system

The fuel pump shut off system stops supplying fuel to the engine to minimize the risk of fuel leakage when the engine stalls or an airbag inflates upon collision. To restart the engine after the fuel pump shut off system activates, turn the ignition switch to ACC or off once and start it.

⚠ CAUTION

Inspect the ground under the vehicle before restarting the engine. If you find that fuel has leaked onto the ground, the fuel system has been damaged and is in need of repair. In this case, do not restart the engine.

Operation in foreign countries

If you plan to drive your Toyota in another country...

First, comply with the vehicle registration laws.

Second, confirm the availability of the correct fuel (unleaded and minimum octane number).

Three-way catalytic converters

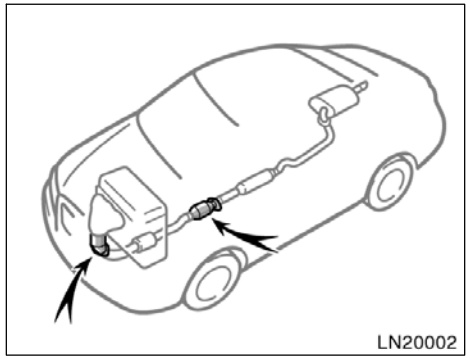

2.4 L 4-cylinder (2AZ-FE) engine

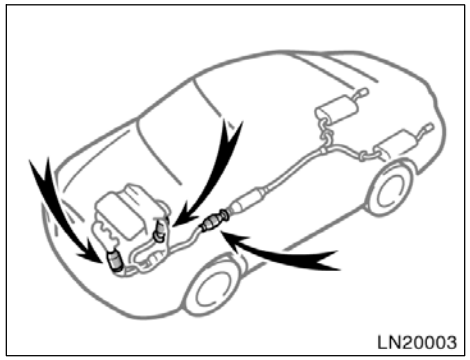

3.5 L V6 (2GR-FE) engine

The three-way catalytic converter is an emission control device installed in the exhaust system.

The purpose is to reduce pollutants in the exhaust gas.

⚠ CAUTION

- **Keep people and combustible materials away from the exhaust pipe while the engine is running. The exhaust gas is very hot.**
- **Do not drive, idle or park your vehicle over anything that may burn easily such as grass, leaves, paper or rags.**

NOTICE

A large amount of unburned gases flowing into the three-way catalytic converter may cause it to overheat and create a fire hazard. To prevent this and other damage, observe the following precautions:

- ***Use only unleaded gasoline.***
- ***Do not drive with an extremely low fuel level; running out of fuel could cause the engine to misfire, creating an excessive load on the three-way catalytic converter.***
- ***Do not allow the engine to run at idle speed for more than 20 minutes.***
- ***Avoid racing the engine.***
- ***Do not push-start or pull-start your vehicle.***
- ***Do not turn off the ignition while the vehicle is moving.***

Engine exhaust cautions

◆*Keep your engine in good running order. Malfunctions in the engine electrical system, electronic ignition system/distributor ignition system or fuel system could cause an extremely high three-way catalytic converter temperature.*

◆*If the engine becomes difficult to start or stalls frequently, take your vehicle in for a check-up as soon as possible. Remember, your Toyota dealer knows your vehicle and its three-way catalytic converter system best.*

◆*To ensure that the three-way catalytic converter and the entire emission control system operate properly, your vehicle must receive the periodic inspections required by the Toyota Maintenance Schedule. For scheduled maintenance information, refer to the “Scheduled Maintenance Guide” or “Owner’s Manual Supplement”.*

⚠ CAUTION

- **Avoid inhaling the engine exhaust. It contains carbon monoxide, which is a colorless and odorless gas. It can cause unconsciousness or even death.**
- **Make sure the exhaust system has no holes or loose connections. The system should be checked from time to time. If you hit something, or notice a change in the sound of the exhaust, have the system checked immediately.**
- **Do not run the engine in a garage or enclosed area except for the time needed to drive the vehicle in or out. The exhaust gases cannot escape, making this a particularly dangerous situation.**
- **Do not remain for a long time in a parked vehicle with the engine running. If it is unavoidable, however, do so only in an unconfined area and adjust the heating or cooling system to force outside air into the vehicle.**
- **Keep the trunk lid closed while driving. An open or unsealed trunk lid may cause exhaust gases to be drawn into the vehicle.**
- **To allow proper operation of your vehicle’s ventilation system, keep the inlet grilles in front of the windshield clear of snow, leaves, or other obstructions.**
- **If you smell exhaust fumes in the vehicle, open the windows and close the trunk lid to ensure plenty of fresh air enters the vehicle. If you can smell exhaust fumes even though there are no other vehicles in the surrounding area, have your vehicle checked by your Toyota dealer. Continued inhalation of exhaust fumes can lead to death by gas poisoning.**

Facts about engine oil consumption

FUNCTIONS OF ENGINE OIL

Engine oil has the primary functions of lubricating and cooling the inside of the engine, and plays a major role in maintaining the engine in proper working order.

ENGINE OIL CONSUMPTION

It is normal that an engine should consume some engine oil during normal engine operation. The causes of oil consumption in a normal engine are as follows.

- Oil is used to lubricate pistons, piston rings and cylinders. A thin film of oil is left on the cylinder wall when a piston moves downwards in the cylinder. High negative pressure generated when the vehicle is decelerating sucks some of this oil into the combustion chamber. This oil as well as some part of the oil film left on the cylinder wall is burned by the high temperature combustion gases during the combustion process.
- Oil is also used to lubricate the stems of the intake valves. Some of this oil is sucked into the combustion chamber together with the intake air and is burned along with the fuel. High temperature exhaust gases also burn the oil used to lubricate the exhaust valve stems.

The amount of engine oil consumed depends on the viscosity of the oil, the quality of the oil and the conditions the vehicle is driven under.

More oil is consumed by high–speed driving and frequent acceleration and deceleration.

A new engine consumes more oil, since its pistons, piston rings and cylinder walls have not become conditioned.

Oil consumption: Max. 1.0 L per 1000 km (1.1 qt./600 miles, 0.9 Imp. qt./600 miles)

When judging the amount of oil consumption, note that the oil may become diluted and make it difficult to judge the true level accurately.

As an example, if a vehicle is used for repeated short trips, and consumes a normal amount of oil, the dipstick may not show any drop in the oil level at all, even after 1000 km (600 miles) or more. This is because the oil is gradually becoming diluted with fuel or moisture, making it appear that the oil level has not changed.

The diluting ingredients evaporate out when the vehicle is then driven at high speeds, as on an express way, making it appear that oil is excessively consumed after driving at high speeds.

IMPORTANCE OF ENGINE OIL LEVEL CHECK

One of the most important points in proper vehicle maintenance is to keep the engine oil at the optimum level so that oil function will not be impaired. Therefore, it is essential that the oil level be checked regularly. Toyota recommends that the oil level be checked every time you refuel the vehicle.

NOTICE
Failure to check the oil level regularly could lead to serious engine trouble due to insufficient oil.

For detailed information on oil level check, see “Checking the engine oil level” on page 380 in Section 7–2.

Iridium–tipped spark plugs (2.4 L 4–cylinder [2AZ–FE] engine)

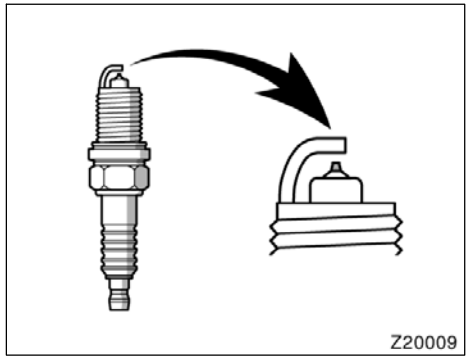

Your engine is fitted with iridium–tipped spark plugs.

NOTICE
Use only iridium–tipped spark plugs. Do not adjust gaps for engine performance or smooth driveability.

Long reach iridium–tipped spark plugs (3.5 L V6 [2GR–FE] engine)

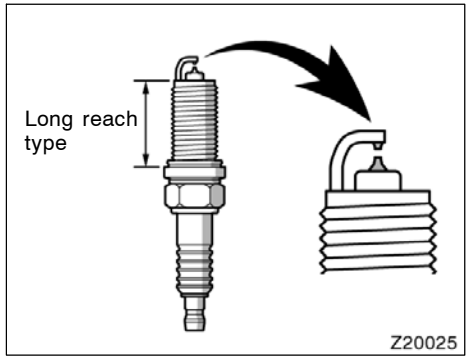

Your engine is fitted with long reach iridium–tipped spark plugs.

NOTICE
Use only Toyota genuine long reach iridium–tipped spark plugs and do not adjust gaps for your engine performance and smooth driveability.

For details about the spark plug type, see “Service specifications” on page 407 in Section 8.

Brake system

The tandem master cylinder brake system is a hydraulic system with two separate sub–systems. If either sub–system should fail, the other will still work. However, the pedal will be harder to press, and your stopping distance will increase. Also, the brake system warning light may come on.

⚠ CAUTION

Do not drive your vehicle with only a single brake system. Have your brakes fixed immediately.

BRAKE BOOSTER

The brake booster uses engine vacuum to power–assist the brakes. If the engine should quit while you are driving, you can bring the vehicle to a stop with normal pedal pressure. There is enough reserved vacuum for one or two stops—but no more!

⚠ CAUTION

- **Do not pump the brake pedal if the engine stalls. Each push on the pedal uses up your reserved vacuum.**
- **Even if the power assist is completely lost, the brakes will still work. But you will have to push the pedal hard, much harder than normal. And your braking distance will increase.**

ANTI–LOCK BRAKE SYSTEM

The anti–lock brake system is designed to help prevent lock–up of the wheels during a sudden braking or braking on slippery road surfaces. This assists in providing directional stability and steering performance of the vehicle under these circumstances.

Effective way to press the ABS brake pedal: When the anti–lock brake system function is in action, you may feel the brake pedal pulsating and hear a noise. In this situation, to let the anti–lock brake system work for you, just hold the brake pedal down more firmly. Do not pump the brake in a panic stop. This will result in reduced braking performance.

The anti–lock brake system becomes operative after the vehicle has accelerated to a speed in excess of approximately 10 km/h (6 mph). It stops operating when the vehicle decelerates to a speed below approximately 5 km/h (3 mph).

Depressing the brake pedal on slippery road surfaces such as on a manhole cover, a steel plate at a construction site, joints in a bridge, etc. on a rainy day tends to activate the anti–lock brake system.

You may hear a click or motor sound in the engine compartment for a few seconds when the engine is started or just after the vehicle begins to move. This means that the anti–lock brake system is in the self–check mode, and does not indicate a malfunction.

When the anti–lock brake system is activated, the following conditions may occur. They do not indicate a malfunction of the system:

- You may hear the anti–lock brake system operating and feel the brake pedal pulsating and the vibrations of the vehicle body and steering wheel. You may also hear the motor sound in the engine compartment even after the vehicle is stopped.
- At the end of the anti–lock brake system activation, the brake pedal may move a little forward.

⚠ CAUTION

Do not overestimate the anti–lock brake system: Although the anti–lock brake system assists in providing vehicle control, it is still important to drive with all due care and maintain a moderate speed and safe distance from the vehicle in front of you, because there are limits to the vehicle stability and effectiveness of steering wheel operation even with the anti–lock brake system on.

If tire grip performance exceeds its capability, or if hydroplaning occurs during high speed driving in the rain, the anti–lock brake system does not provide vehicle control.

Anti–lock brake system is not designed to shorten the stopping distance: Always drive at a moderate speed and maintain a safe distance from the vehicle in front of you. Compared with vehicles without an anti–lock brake system, your vehicle may require a longer stopping distance in the following cases:

- **Driving on rough, gravel or snow–covered roads.**
- **Driving with tire chains installed.**
- **Driving over the steps such as the joints on the road.**
- **Driving on roads where the road surface is pitted or has other differences in surface height.**

Install all 4 tires of specified size at appropriate pressure: The anti–lock brake system detects vehicle speeds using the speed sensors for respective wheels’ turning speeds. The use of tires other than specified may fail to detect the accurate turning speed resulting in a longer stopping distance.

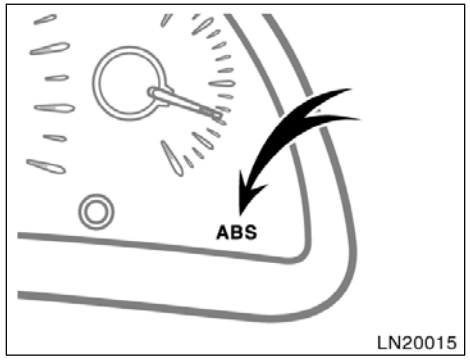

For the U.S.A.

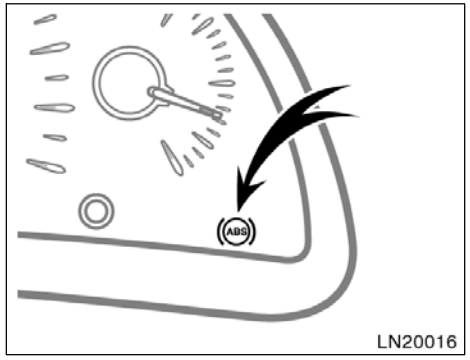

For Canada

“ABS” warning light

Without vehicle stability control system—

The light comes on when the ignition switch is set at ON. If the anti–lock brake system works properly, the light turns off after a few seconds. Thereafter, if the system malfunctions, the light comes on again.

When the “ABS” warning light is on (and the brake system warning light is off), the anti–lock brake system does not operate, but the brake system still operates conventionally.

When the “ABS” warning light is on (and the brake system warning light is off), the anti–lock brake system does not operate so that the wheels could lock up during a sudden braking or braking on slippery road surfaces.

If either of the following conditions occurs, this indicates a malfunction somewhere in the parts monitored by the warning light. Contact your Toyota dealer as soon as possible to service the vehicle.

- The light does not come on when the ignition switch is set at ON, or remains on.
- The light comes on while you are driving.

A warning light turning on briefly during operation does not indicate a problem.

With vehicle stability control system—

The light comes on when the ignition switch is set at ON. If the anti–lock brake system and the brake assist system work properly, the light turns off after a few seconds. Thereafter, if the system malfunctions, the light comes on again.

When the “ABS” warning light is on (and the brake system warning light is off), the anti–lock brake system, the brake assist system, the traction control system and the vehicle stability control system do not operate, but the brake system still operates conventionally.

When the “ABS” warning light is on (and the brake system warning light is off), the anti–lock brake system does not operate so that the wheels could lock up during a sudden braking or braking on slippery road surfaces.

If either of the following conditions occurs, this indicates a malfunction somewhere in the components monitored by the warning light system. Contact your Toyota dealer as soon as possible to service the vehicle.

- The light does not come on when the ignition switch is set at ON, or remains on.
- The light comes on while you are driving.

A warning light turning on briefly during operation does not indicate a problem.

⚠ CAUTION

If the “ABS” warning light remains on together with the brake system warning light, immediately stop your vehicle at a safe place and contact your Toyota dealer.

In this case, not only the anti–lock brake system will fail but also the vehicle will become extremely unstable during braking.

DRUM–IN–DISC TYPE PARKING BRAKE SYSTEM

Your vehicle has a drum–in–disc type parking brake system. This type of brake system needs bedding–down of the brake shoes periodically or whenever the parking brake shoes and/or drums are replaced.

Have your Toyota dealer perform the bedding–down.

BRAKE ASSIST SYSTEM

When you slam the brakes on, the brake assist system judges as an emergency stop and provides more powerful braking for a driver who cannot hold down the brake pedal firmly.

Without vehicle stability control system—

When you slam the brakes on, more powerful braking will be applied. At this time, you may hear a sound behind the brake pedal. This does not indicate a malfunction.

With vehicle stability control system—

When you slam the brakes on, more powerful braking will be applied. At this time, you may hear a sound in the engine compartment and feel the vibrations of the brake pedal. This does not indicate a malfunction.

The brake assist system becomes operative after the vehicle has accelerated to a speed in excess of approximately 10 km/h (6 mph). It stops operating when the vehicle decelerates to a speed below approximately 5 km/h (3 mph).

For an explanation of this system’s warning light, see “Service reminder indicators and warning buzzers” on page 146 in Section 1–6.

Brake pad wear limit indicators

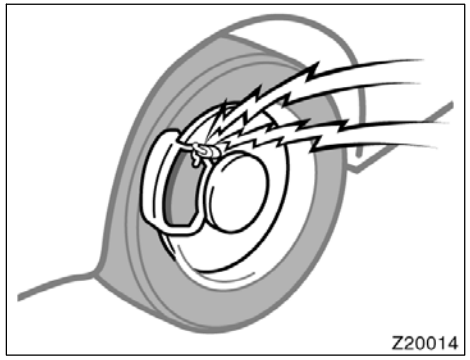

The brake pad wear limit indicators on your disc brakes give a warning noise when the brake pads are worn to where replacement is required.

If you hear a squealing or scraping noise while driving, have the brake pads checked and replaced by your Toyota dealer as soon as possible. Expensive rotor damage can result if the pads are not replaced when necessary.

Your Toyota’s identification——Vehicle identification number

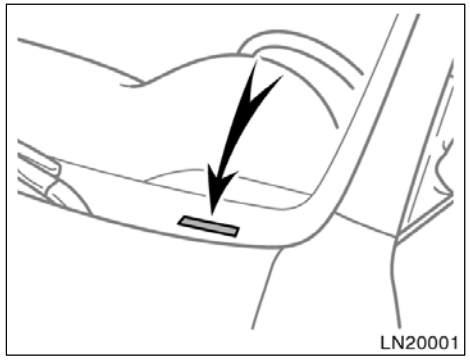

The vehicle identification number (VIN) is the legal identifier for your vehicle. This number is on the left top of the instrument panel, and can be seen through the windshield from outside.

This is the primary identification number for your Toyota. It is used in registering the ownership of your vehicle.

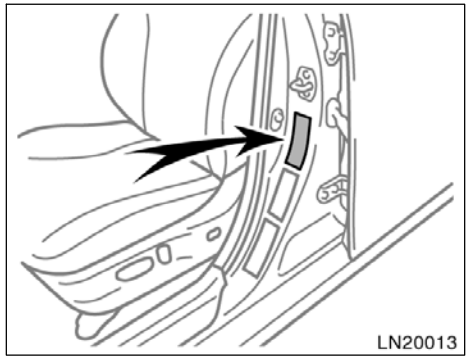

The vehicle identification number (VIN) is also on the Certification Label.

—Engine number

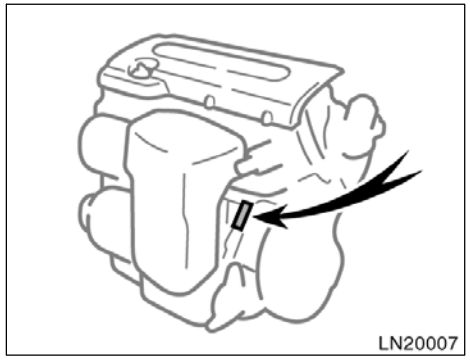

2.4 L 4–cylinder (2AZ–FE) engine

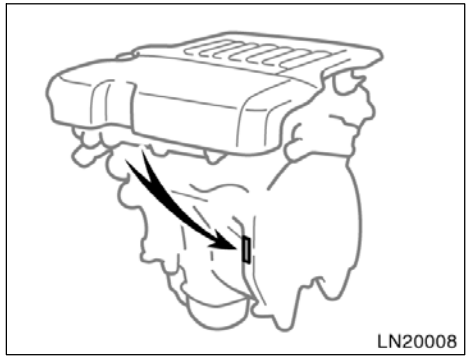

3.5 L V6 (2GR–FE) engine

The engine number is stamped on the engine block as shown.

Theft prevention labels

Your new vehicle carries theft prevention labels which are approximately 47 mm (1.85 in.) by 12 mm (0.47 in.).

The purpose of these labels is to reduce the incidence of vehicle thefts by facilitating the tracing and recovery of parts from stolen vehicles. The label is designed so that once it is applied to a surface, any attempt to remove it will result in destroying the integrity of the label. Transferring these labels intact from one part to another, will be impossible.

NOTICE

You should not attempt to remove the theft prevention labels as it may violate certain state or federal laws.

Suspension and chassis

CAUTION

Do not modify the suspension/chassis with lift kits, spacers, springs, etc. It can cause dangerous vehicle handling characteristics, resulting in loss of control.

Tire information—
—Tire symbols (standard tire)

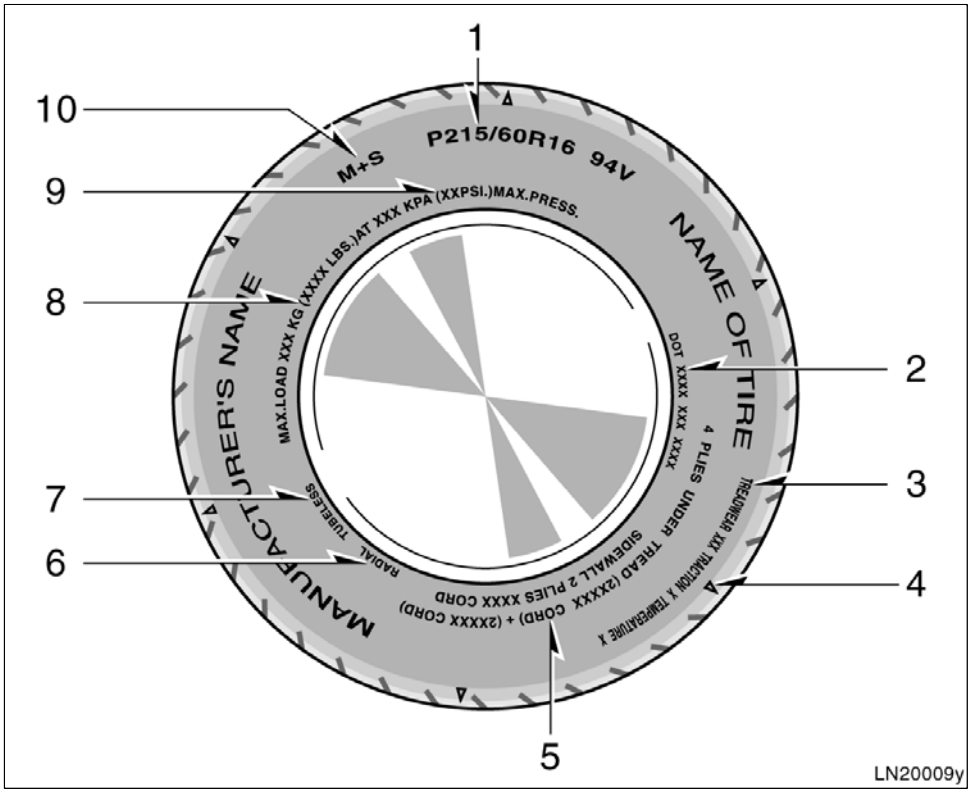

This illustration indicates typical tire symbols.

1. **Tire size—**For details, see “—Tire size” on page 304.
2. **DOT and Tire Identification Number (TIN)—**For details, see “—DOT and Tire Identification Number (TIN)” on page 303.
3. **Uniform tire quality grading—**For details, see “Uniform tire quality grading” that follows.
4. **The location of the tread wear indicators—**For details, see “Checking and replacing tires” on page 388.
5. **Tire ply composition and materials—**Plies mean a layer of rubber–coated parallel cords. Cords mean the strands forming the plies in the tire.
6. **Radial tires or bias–ply tires—**A radial tire has “RADIAL” on the sidewall. A tire not marked with “RADIAL” is a bias–ply tire.

7. **“TUBELESS” or “TUBE TYPE”—**A tubeless tire does not have a tube inside the tire and air is directly filled in the tire. A tube type tire has a tube inside the tire and the tube maintains the air pressure.
8. **Load limit at maximum cold tire inflation pressure—**For details, see “Checking and replacing tires” on page 388.
9. **Maximum cold tire inflation pressure—**This means the pressure to which a tire may be inflated. For details about recommended cold tire inflation pressure, see “Tires” on page 411.
10. **Summer tire or all season tire—**An all season tire has “M+S” on the sidewall. The tire not marked with “M+S” is a summer tire. For details, see “Types of tires” on page 313.

—Tire symbols (compact spare tire)

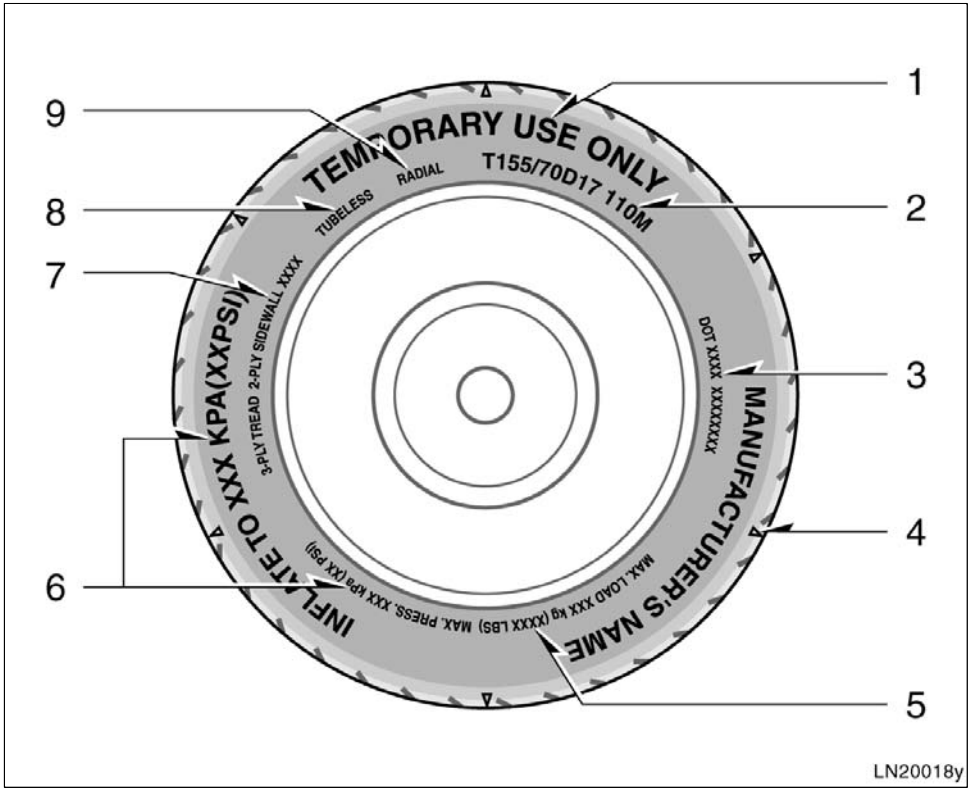

This illustration indicates typical tire symbols.

1. **“TEMPORARY USE ONLY”—**A compact spare tire is identified by the phrase “TEMPORARY USE ONLY” molded into its sidewall. This tire is designed for temporary emergency use only. For details, see “Compact spare tire” on page 344.
2. **Tire size—**For details, see “—Tire size” on page 304.
3. **DOT and Tire Identification Number (TIN)—**For details, see “—DOT and Tire Identification Number (TIN)” on page 303.
4. **The location of the tread wear indicators—**For details, see “Checking and replacing tires” on page 388.
5. **Load limit at maximum cold tire inflation pressure—**For details, see “Checking and replacing tires” on page 388.

6. **Maximum cold tire inflation pressure—**This means the pressure to which a tire may be inflated. For details about recommended cold tire inflation pressure, see “Tires” on page 411.
7. **Tire ply composition and materials—**Plies mean a layer of rubber–coated parallel cords. Cords mean the strands forming the plies in the tire.
8. **“TUBELESS” or “TUBE TYPE”—**A tubeless tire does not have a tube inside the tire and air is directly filled in the tire. A tube type tire has a tube inside the tire and the tube maintains the air pressure.
9. **Radial tires or bias–ply tires—**A radial tire has “RADIAL” on the sidewall. A tire not marked with “RADIAL” is a bias–ply tire.

—DOT and Tire Identification Number (TIN)

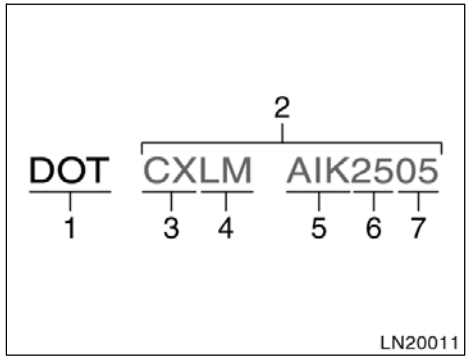

This illustration indicates typical DOT and Tire Identification Number (TIN).

1. “DOT” symbol
2. Tire Identification Number (TIN)
3. Tire manufacturer’s identification mark
4. Tire size code
5. Manufacturer’s optional tire type code (3 or 4 letters)
6. Manufacturing week
7. Manufacturing year

The “DOT” symbol certifies that the tire conforms to applicable Federal Motor Vehicle Safety Standards.

—Tire size

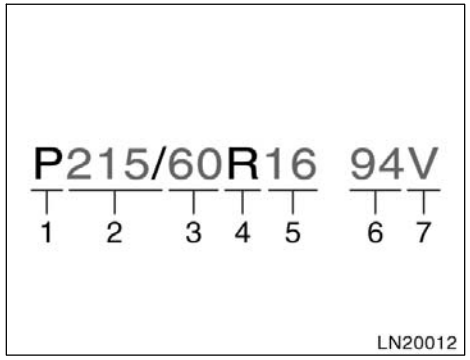

This illustration indicates typical tire size.

1. Tire use (P=Passenger car, T=Temporary use)
2. Section width (in millimeters)
3. Aspect ratio (tire height to section width)
4. Tire construction code (R=Radial, D=Diagonal)
5. Wheel diameter (in inches)
6. Load index (2 digits or 3 digits)
7. Speed symbol (alphabet with one letter)

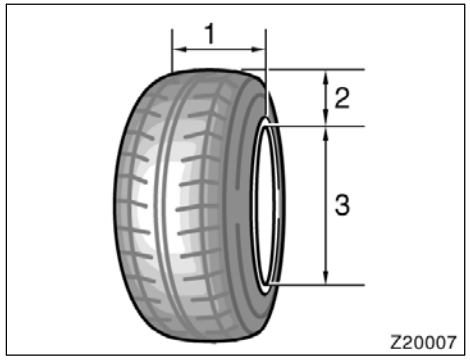

1. Section width
2. Tire height
3. Wheel diameter

—Name of each section of tire

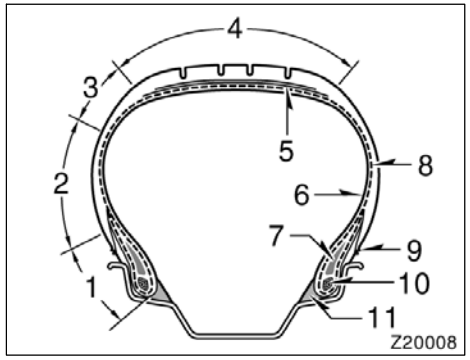

1. Bead
2. Sidewall
3. Shoulder
4. Tread
5. Belt
6. Inner liner
7. Reinforcing rubber
8. Carcass
9. Rim lines
10. Bead wires
11. Chafer

—Uniform tire quality grading

This information has been prepared in accordance with regulations issued by the National Highway Traffic Safety Administration of the U.S. Department of Transportation. It provides the purchasers and/or prospective purchasers of Toyota vehicles with information on uniform tire quality grading.

Your Toyota dealer will help answer any questions you may have as you read this information.

DOT quality grades—All passenger vehicle tires must conform to Federal Safety Requirements in addition to these grades. Quality grades can be found where applicable on the tire sidewall between tread shoulder and maximum section width. For example: Treadwear 200 Traction AA Temperature A

Treadwear—The treadwear grade is a comparative rating based on the wear rate of the tire when tested under controlled conditions on a specified government test course. For example, a tire graded 150 would wear one and a half (1–1/2) times as well on the government course as a tire graded 100. The relative performance of tires depends upon the actual conditions of their use, however, and may depart significantly from the norm due to variations in driving habits, service practices and differences in road characteristics and climate.

Traction AA, A, B, C—The traction grades, from highest to lowest, are AA, A, B, and C, and they represent the tire’s ability to stop on wet pavement as measured under controlled conditions on specified government test surfaces of asphalt and concrete. A tire marked C may have poor traction performance.

Warning: The traction grade assigned to this tire is based on braking (straight ahead) traction tests and does not include cornering (turning) traction.

Temperature A, B, C—The temperature grades are A (the highest), B, and C, representing the tire’s resistance to the generation of heat and its ability to dissipate heat when tested under controlled conditions on a specified indoor laboratory test wheel. Sustained high temperature can cause the material of the tire to degenerate and reduce tire life, and excessive temperature can lead to sudden tire failure. The grade C corresponds to a level of performance which all passenger car tires must meet under the Federal Motor Vehicle Safety Standard No.109. Grades B and A represent higher levels of performance on the laboratory test wheel than the minimum required by law.

Warning: The temperature grades for this tire are established for a tire that is properly inflated and not overloaded. Excessive speed, underinflation, or excessive loading, either separately or in combination, can cause heat buildup and possible tire failure.

—Glossary of tire terminology

Tire related term	Meaning
Accessory weight	the combined weight (in excess of those standard items which may be replaced) of automatic transmission, power steering, power brakes, power windows, power seats, radio, and heater, to the extent that these items are available as factory–installed equipment (whether installed or not)
Cold tire inflation pressure	tire inflation pressure when the vehicle has been parked for at least 3 hours or more, or it has not been driven more than 1.5 km or 1 mile under that condition
Curb weight	the weight of a motor vehicle with standard equipment including the maximum capacity of fuel, oil, and coolant, and, if so equipped, air conditioning and additional weight optional engine
Intended outboard sidewall	(A) the sidewall that contains a whitewall, bears white lettering or bears manufacturer, brand, and/or model name molding that is higher or deeper than the same molding on the other sidewall of the tire, or (B) the outward facing sidewall of an asymmetrical tire that has a particular side that must always face outward when mounted on a vehicle
Maximum inflation pressure	the maximum cold inflation pressure to which a tire may be inflated and it is shown on the sidewall of the tire
Maximum loaded vehicle weight	the sum of— (a) curb weight; (b) accessory weight; (c) vehicle capacity weight; and (d) production options weight

Tire related term	Meaning
Normal occupant weight	68 kg (150 lb.) times the number of occupants specified in the second column of Table 1 that follows
Occupant distribution	distribution of occupants in a vehicle as specified in the third column of Table 1 that follows
Production options weight	the combined weight of those installed regular production options weighing over 2.3 kg (5 lb.) in excess of those standard items which they replace, not previously considered in curb weight or accessory weight, including heavy duty brakes, ride levelers, roof rack, heavy duty battery, and special trim
Recommended inflation pressure	cold tire inflation pressure recommended by a manufacturer
Rim	a metal support for a tire or a tire and tube assembly upon which the tire beads are seated
Rim diameter (Wheel diameter)	nominal diameter of the bead seat
Rim size designation	rim diameter and width
Rim type designation	the industry of manufacturer’s designation for a rim by style or code
Rim width	nominal distance between rim flanges
Vehicle capacity weight (Total load capacity)	the rated cargo and luggage load plus 68 kg (150 lb.) times the vehicle’s designated seating capacity
Vehicle maximum load on the tire	the load on an individual tire that is determined by distributing to each axle its share of the maximum loaded vehicle weight and dividing by two

Tire related term	Meaning
Vehicle normal load on the tire	the load on an individual tire that is determined by distributing to each axle its share of the curb weight, accessory weight, and normal occupant weight (distributed in accordance with Table 1 that follows) and dividing by two
Weather side	the surface area of the rim not covered by the inflated tire

Table 1—Occupant loading and distribution for vehicle normal load for various designated seating capacities

Designated seating capacity, number of occupants	Vehicle normal load, number of occupants	Occupant distribution in a normally loaded vehicle
2 through 4	2	2 in front
5 through 10	3	2 in front, 1 in second seat

Vehicle load limits

Vehicle load limits include total load capacity, seating capacity, towing capacity and cargo capacity. Follow the load limits shown below. Total load capacity and seating capacity are also described on the tire and loading information label. For location of the tire and loading information label, see “Checking tire inflation pressure” on page 385.

Total load capacity:
410 kg (900 lb.)
Total load capacity means combined weight of occupants, cargo and luggage. Tongue load is included when trailer towing.

Seating capacity:
Total 5 (Front 2, Rear 3)
Seating capacity means the maximum number of occupants whose estimated average weight is 68 kg (150 lb.) per person. Depending on the weight of each person, the seating capacity given may exceed the total load capacity.

NOTICE

Even if the number of occupants are within the seating capacity, do not exceed the total load capacity.

Towing capacity:
453 kg (1000 lb.)
Towing capacity means the maximum gross trailer weight (trailer weight plus its cargo weight) that your vehicle is able to tow.

Cargo capacity

Cargo capacity may increase or decrease depending on the size (weight) and the number of occupants. For details, see “Capacity and distribution” that follows.

⚠ CAUTION

Do not apply the load more than each load limit. That may cause not only damage to the tires, but also deterioration to the steering ability and braking ability, which may cause an accident.

Cargo and luggage— —Stowage precautions

When stowing cargo and luggage in the vehicle, observe the following:

- Put cargo and luggage in the trunk when at all possible. Be sure all items are secured in place.
- Be careful to keep the vehicle balanced. Locating the weight as far forward as possible helps maintain balance.
- For better fuel economy, do not carry unneeded weight.

⚠ CAUTION

- **To prevent cargo and luggage from sliding forward during braking, do not stack anything in the enlarged trunk. Keep cargo and luggage low, as close to the floor as possible.**
- **Vehicles with fold–down type rear seat—Never allow anyone to ride in the enlarged trunk. It is not designed for passengers. They should ride in their seats with their seat belts properly fastened. Otherwise, they are much more likely to suffer death or serious bodily injury, in the event of sudden braking or a collision.**
- **Do not place anything on the package tray behind the rear seatback. Such items may be thrown about and possibly injure people in the vehicle during sudden braking or an accident.**

- **Do not drive with objects left on top of the instrument panel. They may interfere with the driver’s field of view. Or they may move during sharp vehicle acceleration or turning, and impair the driver’s control of the vehicle. In an accident they may injure the vehicle occupants.**

—Capacity and distribution

Cargo capacity depends on the total weight of the occupants.

(Cargo capacity) = (Total load capacity) – (Total weight of occupants)

Steps for Determining Correct Load Limit—

(1) Locate the statement “The combined weight of occupants and cargo should never exceed XXX kg or XXX lbs.” on your vehicle’s placard.

(2) Determine the combined weight of the driver and passengers that will be riding in your vehicle.

(3) Subtract the combined weight of the driver and passengers from XXX kg or XXX lbs.

(4) The resulting figure equals the available amount of cargo and luggage load capacity. For example, if the “XXX” amount equals 1400 lbs. and there will be five 150 lb passengers in your vehicle, the amount of available cargo and luggage load capacity is 650 lbs. (1400–750 (5x150)=650 lbs.)

(5) Determine the combined weight of luggage and cargo being loaded on the vehicle. That weight may not safely exceed the available cargo and luggage load capacity calculated in Step 4.

(6) If your vehicle will be towing a trailer, load from your trailer will be transferred to your vehicle. Consult this manual to determine how this reduces the available cargo and luggage load capacity of your vehicle.

For details about trailer towing, see page 327.

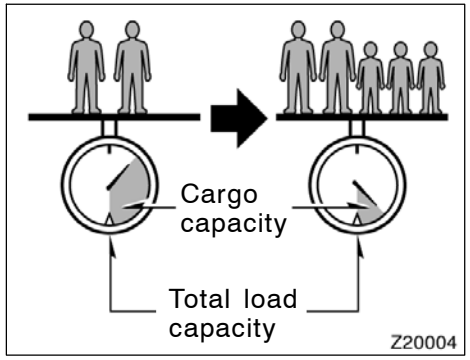

Example on Your Vehicle

In case that 2 people with the combined weight of 166 kg (366 lb.) are riding in your vehicle with the total load capacity of 410 kg (900 lb.), the available amount of cargo and luggage load capacity will be as follows:

410 kg – 166 kg = 244 kg.
(900 lb. – 366 lb. = 534 lb.)

From this condition, if 3 more passengers with the combined weight of 176 kg (388 lb.) get on, the available cargo and luggage load will be reduced as follows:

244 kg – 176 kg = 68 kg.
(534 lb. – 388 lb. = 146 lb.)

As shown in the above example, if the number of occupants increases, the cargo and luggage load equaling the combined weight of occupants who got on later must be reduced. In other words, if the increase in the number of occupants causes the excess of the total load capacity (combined weight of occupants plus cargo and luggage load), you have to reduce the cargo and luggage on your vehicle.

For details about total load capacity, see “Vehicle load limits” on page 310.

⚠ CAUTION

Even if the total load of occupant’s weight and the cargo load is less than the total load capacity, do not apply the load unevenly. That may cause not only damage to the tire but also deterioration to the steering ability due to unbalance of the vehicle, causing an accident.

Types of tires

Determine what kind of tires your vehicle is originally equipped with.

1. Summer tires

Summer tires are high–speed capability tires best suited to highway driving under dry conditions.

Since summer tires do not have the same traction performance as snow tires, summer tires are inadequate for driving on snow–covered or icy roads. For driving on snow–covered or icy roads, we recommend using snow tires. If installing snow tires, be sure to replace all four tires.

2. All season tires

All season tires are designed to provide better traction in snow and to be adequate for driving in most winter conditions, as well as for use all year round.

All season tires, however, do not have adequate traction performance compared with snow tires in heavy or loose snow. Also, all season tires fall short in acceleration and handling performance compared with summer tires in highway driving.

The details about how to distinguish summer tires from all season tires are described on page 300.

⚠ CAUTION

- **Do not mix summer and all season tires on your vehicle as this can cause dangerous handling characteristics, resulting in loss of control.**
- **Do not use tires other than the manufacturer’s designated tires, and never mix tires or wheels of the sizes different from the originally equipped tires and wheels.**

SECTION 3

STARTING AND DRIVING

Starting and driving

Before starting the engine 316
How to start the engine 316
Driving and parking using smart key system 320
Tips for driving in various conditions 323
Winter driving tips 324
Dinghy towing 325
Trailer towing 327
How to save fuel and make your vehicle last longer 332

Before starting the engine

1. Check the area around the vehicle before entering it.
2. Adjust seat position, seatback angle, seat cushion height, head restraint height, steering wheel angle and length.
3. Adjust the inside and outside rear view mirrors.
4. Lock all doors.
5. Fasten seat belts.

How to start the engine——Cranking hold function

(vehicle with smart key system)

Once you press “ENGINE START STOP” switch (engine switch) and release it, the cranking hold function continues to crank the engine until it starts.

The function stops cranking the engine after about 25 seconds maximum if the engine has not started yet. When you crank the engine again, wait a few seconds and restart it.

If you press and hold the “ENGINE START STOP” switch, the function will keep cranking for about 30 seconds maximum.

(a) Before cranking

1. Apply the parking brake firmly.
2. Turn off unnecessary lights and accessories.
3. **Manual transmission:** Press the clutch pedal to the floor and shift the transmission into neutral. Hold the clutch pedal to the floor until the engine is started. A starter safety device will prevent the starter from operating if the clutch pedal is not fully depressed.

   Automatic transmission: Put the selector lever in “P”. If you need to restart the engine while the vehicle is moving, put the selector lever in “N”. A starter safety device will prevent the starter from operating if the selector lever is in any drive position.
4. **Automatic transmission only:** Depress the brake pedal and hold it to the floor until driving off.

(b) Starting the engine (with key cylinder–type ignition switch)

Before starting the engine, be sure to follow the instructions in “(a) Before cranking”.

Normal starting procedure

The multiport fuel injection system/sequential multiport fuel injection system in your engine automatically controls the proper air–fuel mixture for starting. You can start a cold or hot engine as follows:

With your foot off the accelerator pedal, crank the engine by turning the key to “START”. Release it when the engine starts.

Engine should be warmed up by driving, not in idle. For warming up, drive with smoothly turning engine until engine coolant temperature is within normal range.

If the engine stalls...

Simply restart it, using the correct procedure given in normal starting.

If the engine will not start...

See “If your vehicle will not start” on page 336 in Section 4.

NOTICE

- ***Do not crank for more than 30 seconds at a time. This may overheat the starter and wiring systems.***
- ***Do not race a cold engine.***
- ***If the engine becomes difficult to start or stalls frequently, have the engine checked immediately.***

(b) Starting the engine (with smart key system)

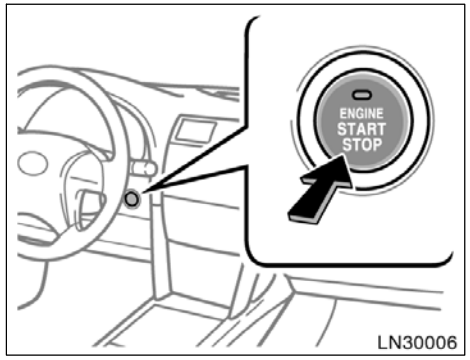

PUSH BUTTON START FUNCTION

The engine can be started by pressing the “ENGINE START STOP” switch.

Before starting the engine, be sure to follow the instructions in “(a) Before cranking”.

Normal starting procedure

The multiport fuel injection system/sequential multiport fuel injection system in your engine automatically controls the proper air–fuel mixture for starting.

You can start a cold or hot engine as follows:

When the key is in the vehicle (on your person), it is possible to start the engine.

With the brake pedal firmly depressed, the indicator light on the “ENGINE START STOP” switch will turn green. Check that the automatic transmission selector lever is in the “P” position. Pressing the “ENGINE START STOP” switch once starts the engine.

Press the “ENGINE START STOP” switch slowly and firmly.

Engine should be warmed up by driving, not in idle. For warming up, drive with smoothly turning engine until engine coolant temperature is within normal range.

If the engine stalls...

Simply restart it, using the correct procedure given in normal starting.

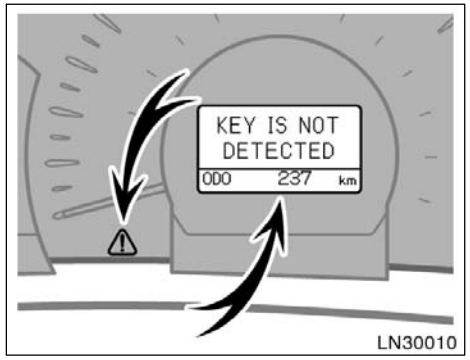

If the engine will not start...

In the following cases, the engine will not start.

- If a buzzer sounds from the vehicle, and the “KEY IS NOT DETECTED” message appears on the multi–information display and the master warning light comes on when pressing the “ENGINE START STOP” switch, this indicates that the key is not in the vehicle.
- If the key is placed in the trunk, the engine cannot be started.
- There are instances in which the engine will not start, even if the key is in the vehicle (e.g. on the floor, in the cup holder or glove box).

When the push button start function does not operate properly, the following may be causes:

- The key battery may be discharged if the electronic key does not work.

  You can start the engine by touching the Toyota logo side of the electronic key to the “ENGINE START STOP” switch. For details, see “Smart key system” on page 30 in Section 1–2.

  Replace the key battery as soon as possible. (See “—Replacing battery” on page 28 in Section 1–2.)
- The engine was repeatedly turned on and off over a short period.

  Wait 10 seconds and then start the engine.

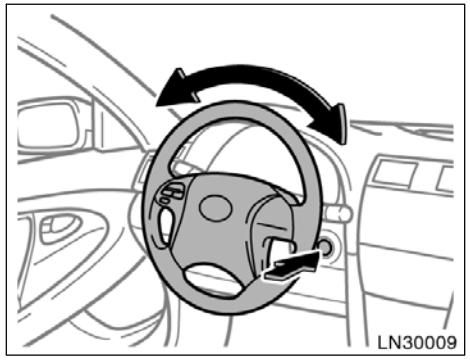

- If the green indicator light on the “ENGINE START STOP” switch flashes, and the “S/T IS NOT UNLOCKED” message appears on the multi–information display and the master warning light comes on, the steering wheel is locked.

  To free it, rotate the steering wheel slightly while pressing the “ENGINE START STOP” switch.

- If the amber indicator light on the “ENGINE START STOP” switch flashes, and the “CHECK S/T LOCK” message appears on the multi–information display and the master warning light comes on, there is a problem in the steering lock function.

  Contact your Toyota dealer, and have your vehicle and all keys inspected.

- If the amber indicator light on the “ENGINE START STOP” switch flashes, and no message appears on the multi–information display, there is a problem in the push button start function.

  Contact your Toyota dealer, and have your vehicle and all keys inspected.

- In addition to the above, there are instances in which the smart key system does not operate properly because of the circumstances of use. For details, see “Smart key system” on page 30 in Section 1–2.

In cases other than those described above, it is possible that a problem has occurred in an area other than the start system. See “If your vehicle will not start” on page 336 in Section 4.

When the battery is disconnected or run down, the push button start function memorizes the current mode. After you reconnect, replace, or recharge the battery, the memorized mode is selected automatically. In any of these cases, turn off the engine if the engine comes on.

Wait 10 seconds to start the engine after the battery has been reconnected. The engine may not start on the first try. This does not indicate a malfunction.

NOTICE

- ***Do not race a cold engine.***
- ***If the engine becomes difficult to start or stalls frequently, have the engine checked immediately.***

Driving and parking using smart key system

TIPS FOR USING SMART KEY SYSTEM

When using the smart key system, it is possible to start or stop the engine as long as the key is on your person.

For this reason, it is possible that a passenger may remove the key from the vehicle without the driver being aware of the fact. In such a case, it is not possible to restart the engine after having turned it off. In addition, it is possible that one may get out of the vehicle without being aware that the ignition switch has not been turned off completely.

When driving or getting in or out of the vehicle, drivers should make sure that they are carrying the key.

⚠ CAUTION

Do not touch the “ENGINE START STOP” switch (engine switch) while driving.

If you have to make an emergency stop, press and hold the “ENGINE START STOP” switch for more than 3 seconds.

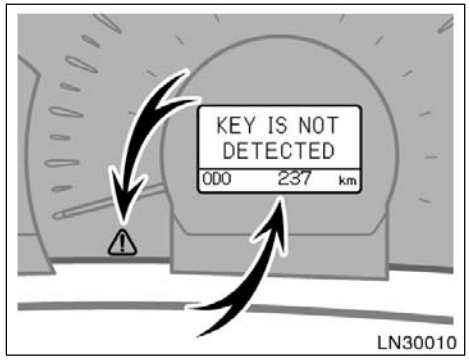

Master warning light and multi–information display

SYSTEM FUNCTION REMINDERS

Follow the instructions described below if any of the following warnings occur:

(A) A warning buzzer sounds once from the instrument cluster when the ignition switch is turned on

This indicates that the driver has gotten into the vehicle without the key. The “KEY IS NOT DETECTED” message will also appear on the multi–information display and the master warning light will come on.

Operate the ignition switch only after taking care that the key is in the vehicle.

If the warning light is still lit when the key is in the vehicle, the key battery is discharged. Check that the indicator light on the key comes on by pushing the lock button on the key. When the indicator light does not come on, change the key battery so that smart key system works properly.

(B) A warning buzzer sounds once from the instrument cluster, accompanied by three warning sounds from the vehicle when the driver gets out of the vehicle and closes the door

This indicates that the driver is attempting to leave the vehicle carrying the key with ignition switch not set at OFF although the transmission selector lever has been set in the “P” position. The “KEY IS NOT DETECTED” message will also appears on the multi–information display and the master warning light will come on.

Get out of the vehicle only after turning off the engine by pressing the “ENGINE START STOP” switch and checking that the ignition switch indicator light has gone off. If the driver returns to the vehicle without carrying the key and begins driving, a warning buzzer will sound once more.

(C) A warning buzzer sounds from the vehicle for two seconds after locking the door with the door handle switch

This indicates that the driver is attempting to lock the doors while carrying the key, neglecting to follow the instructions for case (B) above.

Lock the doors only after turning off the engine by pressing the “ENGINE START STOP” switch and checking that the ignition switch indicator light has gone off.

A warning buzzer that sounds even though the engine has been turned off indicates that driver is attempting to lock the vehicle with the keys still in the vehicle.

Leave the vehicle only after making sure that you are carrying the key.

(D) A warning buzzer sounds continuously from the instrument cluster when opening the driver’s door

This indicates that the transmission selector lever is in a position other than “P” and that the ignition switch is not set at OFF. The “SHIFT TO P RANGE” message will also appears on the multi–information display.

Get out of the vehicle only after setting the transmission selector lever in the “P” position, turning off the engine by pressing the “ENGINE START STOP” switch and checking that the ignition switch indicator light has gone off.

(E) A warning buzzer sounds continuously from the instrument cluster and from the vehicle when closing the door after getting out of the vehicle

This indicates that the driver is attempting to leave the vehicle carrying the key, neglecting to follow the instructions for case (D) above. The messages, “SHIFT TO P RANGE” and “KEY IS NOT DETECTED”, will also appear alternately on the multi–information display and the master warning light will come on.

Get out of the vehicle only after setting the transmission selector lever in the “P” position, turning off the engine by pressing the “ENGINE START STOP” switch and checking that the ignition switch indicator light has gone off.

(F) A warning buzzer sounds once from the instrument cluster and three times from the vehicle when a passenger is getting out of the vehicle

This indicates that the passenger is attempting to leave the vehicle carrying the key, without the ignition switch set at OFF. The “KEY IS NOT DETECTED” message will also appear on the multi–information display and the master warning light will come on.

When passengers get out of the vehicle, care should be taken to leave the key with the driver. If the driver begins driving after a passenger gets out of the vehicle carrying the key, a warning buzzer will sound once more.

(G) A warning buzzer sounds from the vehicle for two seconds when locking the vehicle from the outside with the door handle switch

This indicates that the driver is attempting to lock the door with the key still in the vehicle.

Leave the vehicle only after making sure that you are carrying the key.

(H) A warning buzzer sounds once from the instrument cluster when turning off the ignition switch

This indicates that the key battery is low. (This warning buzzer sounds only when the engine has been on or the ignition switch has been set at ON for 20 minutes or more.) The “LOW KEY BATTERY” message will also appear on the multi–information display.

Change the key battery ahead of time in order to ensure that the smart key system properly.

(I) A warning buzzer sounds repeatedly from the instrument cluster when opening the driver’s door with the ignition switch turned off

This indicates that the steering wheel is not locked. Turn the engine off and then open the door in order to lock the steering wheel.

(J) The “ENGINE START STOP” switch flashes green once every second

This indicates that the steering lock is stuck. The “S/T IS NOT UNLOCKED” message will also appear on the multi–information display.

To free it, rotate the steering wheel slightly while pressing the “ENGINE START STOP” switch.

(K) The “ENGINE START STOP” switch flashes amber once every 2 seconds

When “CHECK S/T LOCK” is displayed on the multi–information display—
This indicates a problem with the steering lock function. Have your vehicle checked at your Toyota dealer.

When no message is displayed on the multi–information display—
This indicates a problem with the push button start function. Have your vehicle checked at your Toyota dealer.

THEFT PREVENTION FUNCTION

- When the engine is turned off, the engine immobilizer system is automatically set. (See “Engine immobilizer system” on page 18 in Section 1–2.)
- When the driver’s door is opened after turning off the engine, the steering wheel will lock.

  When the vehicle’s battery is discharged, the steering lock function may not operate properly.

Tips for driving in various conditions

- Always slow down in gusty crosswinds. This will allow you much better control.
- Drive slowly onto curbs and, if possible, at a right angle. Avoid driving onto high, sharp–edged objects and other road hazards. Failure to do so can lead to severe tire damage such as a tire burst.

  Drive slowly when passing over bumps or travelling on a bumpy road. Otherwise, the impact could cause severe damage to the tires and/or wheels.
- When parking on a hill, turn the front wheels until they touch the curb so that the vehicle will not roll. Apply the parking brake, and place the transmission in “P” (automatic) or in first or reverse (manual). If necessary, block the wheels.
- Washing your vehicle or driving through deep water may get the brakes wet. To see whether they are wet, check that there is no traffic near you, and then press the pedal lightly. If you do not feel a normal braking force, the brakes are probably wet. To dry them, drive the vehicle cautiously while lightly pressing the brake pedal with the parking brake applied. If they still do not work safely, pull to the side of the road and call a Toyota dealer for assistance.

⚠ CAUTION

- **Before driving off, make sure that the parking brake is fully released and the parking brake reminder light is off.**
- **Do not leave your vehicle unattended while the engine is running.**
- **Do not rest your foot on the brake pedal while driving. It can cause dangerous overheating, needless wear, and poor fuel economy.**
- **To drive down a long or steep hill, reduce your speed and downshift. Remember, if you ride the brakes excessively, they may overheat and not work properly.**

- **Be careful when accelerating, upshifting, downshifting or braking on a slippery surface. Sudden acceleration or engine braking could cause the vehicle to skid or spin.**
- **Do not drive in excess of the speed limit. Even if the legal speed limit permits it, do not drive over 140 km/h (85 mph) unless your vehicle has high–speed capability tires. Driving over 140 km/h (85 mph) may result in tire failure, loss of control and possible injury. Be sure to consult a tire dealer to determine whether the tires on your vehicle are high–speed capability tires or not before driving at such speeds.**
- **Do not continue normal driving when the brakes are wet. If they are wet, your vehicle will require a longer stopping distance, and it may pull to one side when the brakes are applied. Also, the parking brake will not hold the vehicle securely.**

Winter driving tips

Make sure your coolant is properly protected against freezing.

Only use “Toyota Super Long Life Coolant” or similar high quality ethylene glycol based non–silicate, non–amine, non–nitrite, and non–borate coolant with long–life hybrid organic acid technology. (Coolant with long–life hybrid organic acid technology is a combination of low phosphates and organic acids.)

See “Checking the engine coolant level” on page 382 in Section 7–2 for details of coolant type selection.

For the U.S.A.—“Toyota Super Long Life Coolant” is a mixture of 50% coolant and 50% deionized water. This coolant provides protection down to about –35°C (–31°F).

For Canada—“Toyota Super Long Life Coolant” is a mixture of 55% coolant and 45% deionized water. This coolant provides protection down to about –42°C (–44°F).

NOTICE
Do not use plain water alone.

Check the condition of the battery and cables.

Cold temperatures reduce the capacity of any battery, so it must be in top shape to provide enough power for winter starting. Section 7–3 tells you how to visually inspect the battery. Your Toyota dealer and most service stations will be pleased to check the level of charge.

Make sure the engine oil viscosity is suitable for the cold weather.

See page 381 in Section 7–2 for recommended viscosity. Leaving a heavy summer oil in your vehicle during winter months may cause harder starting. If you are not sure about which oil to use, call your Toyota dealer—they will be pleased to help.

Keep the door locks from freezing.

Squirt lock de–icer or glycerine into the locks to keep them from freezing.

Use a washer fluid containing an anti-freeze solution.

This product is available at your Toyota dealer and most auto parts stores. Follow the manufacturer’s directions for how much to mix with water.

NOTICE
Do not use engine antifreeze or any other substitute because it may damage your vehicle’s paint.

Do not use your parking brake when there is a possibility it could freeze.

When parking, put the transmission into “P” (automatic) or into first or reverse (manual) and block the rear wheels. Do not use the parking brake, or snow or water accumulated in and around the parking brake mechanism may freeze, making it hard to release.

Keep ice and snow from accumulating under the fenders.

Ice and snow built up under your fenders can make steering difficult. During bad winter driving, stop and check under the fenders occasionally.

Depending on where you are driving, we recommend you carry some emergency equipment.

Some of the things you might put in the vehicle are tire chains, window scraper, bag of sand or salt, flares, small shovel, jumper cables, etc.

Dinghy towing (with automatic transmission)

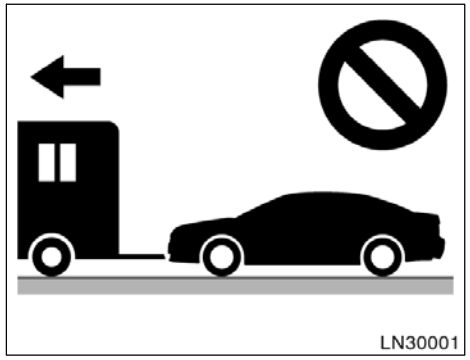

Your vehicle is not designed to be dinghy towed (with four wheels on the ground) behind a motorhome.

NOTICE
Do not tow your vehicle with four wheels on the ground. This may cause serious damage to your vehicle.

Dinghy towing (with manual transmission)

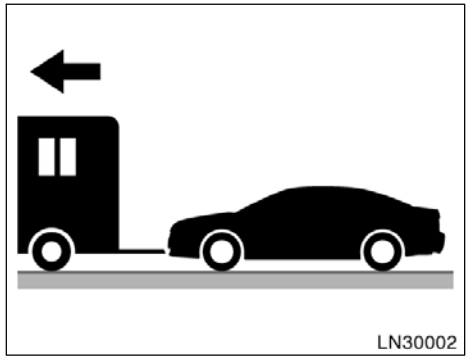

Your vehicle can be dinghy towed (with four wheels on the ground) from the front behind a motorhome.

CAUTION

Dinghy towing requires special equipment and accessories. Please refer to your service outlet of the motorhome manufacture for the recommended equipment.

NOTICE

Dinghy towing does not eliminate the possibility of damage to your vehicle.

DINGHY TOWING TIPS

Before dinghy towing, be sure to observe the following in order to reduce the damage to your vehicle.

1. Put the shift lever in neutral.
2. Set the ignition switch at ACC. Make sure the audio is turned off and any item is not plugged into the power outlet.

NOTICE

To avoid the locking of the steering wheel, set the ignition switch at ACC.

3. Release the parking brake.

After dinghy towing, let the engine idle for more than 3 minutes before driving the vehicle.

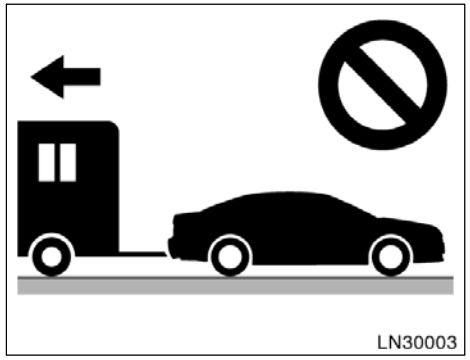

NOTICE

Do not tow your vehicle from the rear. This may cause serious damage to your vehicle.

Trailer towing

Your vehicle is designed primarily as a passenger–carrying vehicle. Towing a trailer will have an adverse effect on handling, performance, braking, durability and driving economy (fuel consumption, etc.). Your safety and satisfaction depend on the proper use of correct equipment and cautious driving habits. For your safety and the safety of others, you must not overload your vehicle or trailer. Toyota warranties do not apply to damage or malfunction caused by towing a trailer for commercial purposes. Ask your local Toyota dealer for further details before towing.

NOTICE

When towing a trailer, be sure to consult your Toyota dealer for further information on additional requirements such as a towing kit, etc.

WEIGHT LIMITS

Before towing, make sure the total trailer weight, gross vehicle weight, gross axle weight and trailer tongue load are all within the limits.

The total trailer weight and tongue load can be measured with platform scales found at a highway weighing station, building supply company, trucking company, junk yard, etc.

CAUTION

- **The total trailer weight (trailer weight plus its cargo load) must not exceed 453 kg (1000 lb.). Exceeding this weight is dangerous.**
- **Trailer hitch assemblies have different weight capacities established by the hitch manufacturer. Even though the vehicle may be physically capable of towing a higher weight, the operator must determine the maximum weight rating of the particular hitch assembly and never exceed the maximum weight rating specified for the trailer–hitch. Exceeding the maximum weight rating set by the trailer hitch manufacturer can cause an accident resulting in serious personal injuries.**

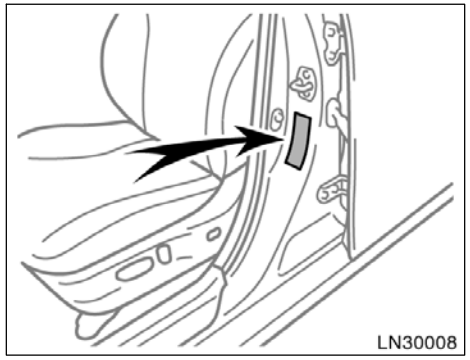

- **The gross vehicle weight must not exceed the Gross Vehicle Weight Rating (GVWR) indicated on the Certification Label. The gross vehicle weight is the sum of weights of the unloaded vehicle, driver, passengers, luggage, hitch and trailer tongue load. It also includes the weight of any special equipment installed on your vehicle.**

- **The load on either the front or rear axle resulting from distribution of the gross vehicle weight on both axles must not exceed the Gross Axle Weight Rating (GAWR) listed on the Certification Label.**

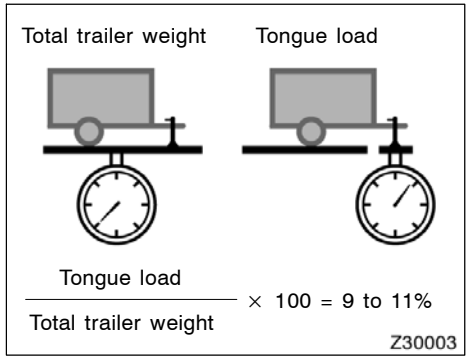

- **The trailer cargo load should be distributed so that the tongue load is 9 to 11% of the total trailer weight, not exceeding the maximum of 45 kg (100 lb.). Never load the trailer with more weight in the back than in the front. About 60% of the trailer load should be in the front half of the trailer and the remaining 40% in the rear.**

HITCHES

- Use only a hitch which is recommended by the hitch manufacturer and conforms to the total trailer weight requirement.
- Follow the directions supplied by the hitch manufacturer. Lubricate the hitch ball with a light coat of grease.
- Toyota recommends removing the trailer hitch whenever you are not towing a trailer to reduce the possibility of additional damage caused by the hitch if your vehicle is struck from behind.

NOTICE

Do not use axle–mounted hitches as they can cause damage to the axle housing, wheel bearings, wheels or tires. Also, never install a hitch which may interfere with the normal function of an Energy Absorbing Bumper, if so equipped.

BRAKES AND SAFETY CHAINS

- **Toyota recommends trailers with brakes that conform to any applicable federal and state/provincial regulations.**
- **A safety chain must always be used between the towing vehicle and the trailer. Leave sufficient slack in the chain for turns. The chain should cross under the trailer tongue to prevent the tongue from dropping to the ground in case it becomes damaged or separated. For correct safety chain procedures, follow the hitch or trailer manufacturer’s recommendations.**

⚠ CAUTION

- **Never tap into your vehicle’s hydraulic system as it would lower its braking effectiveness.**
- **Never tow a trailer without using a safety chain securely attached to both the trailer and the vehicle. If damage occurs to the coupling unit or hitch ball, there is danger of the trailer wandering over into another lane.**

TIRES

- Ensure that your vehicle’s tires are properly inflated. See page 385 in Section 7–2 and page 411 in Section 8 for instructions.
- The trailer tires should be inflated to the pressure recommended by the trailer manufacturer in respect to the total trailer weight.

TRAILER LIGHTS

- Trailer lights must comply with federal, state/provincial and local regulations. See your local recreational vehicle dealer or rental agency for the correct type of wiring and relays for your trailer. Check for correct operation of the turn signals and stop lights each time you hitch up. Direct splicing may damage your vehicle’s electrical system and cause a malfunction of your lights.

BREAK–IN SCHEDULE

- Toyota recommends that you do not tow a trailer with a new vehicle or a vehicle with any new power train component (engine, transmission, differential, wheel bearing, etc.) for the first 800 km (500 miles) of driving.

MAINTENANCE

- If you tow a trailer, your vehicle will require more frequent maintenance due to the additional load. For this information, please refer to the scheduled maintenance information in the “Scheduled Maintenance Guide” or “Owner’s Manual Supplement”.
- Retighten all fixing bolts of the towing ball and bracket after approximately 1000 km (600 miles) of trailer driving.

PRE–TOWING SAFETY CHECK

- Check that your vehicle remains level when a loaded or unloaded trailer is hitched. Do not drive if the vehicle has an abnormal nose–up or nose–down condition, and check for improper tongue load, overload, worn suspension or other possible causes.
- Make sure the trailer cargo is securely loaded so that it can not shift.
- Check that your rear view mirrors conform to any applicable federal, state/provincial or local regulations. If not, install the rear view mirrors required for towing purpose.

TRAILER TOWING TIPS

When towing a trailer, your vehicle will handle differently than when not towing. The three main causes of vehicle–trailer accidents are driver error, excessive speed and improper trailer loading. Keep these in mind when towing:

- Before starting out, check operation of the lights and all vehicle–trailer connections. After driving a short distance, stop and recheck the lights and connections. Before actually towing a trailer, practice turning, stopping and backing with a trailer in an area away from traffic until you learn the feel.
- Backing with a trailer is difficult and requires practice. Grip the bottom of the steering wheel and move your hand to the left to move the trailer to the left. Move your hand to the right to move the trailer to the right. (This procedure is generally opposite to that when backing without a trailer.) Also, just turn the steering wheel a little at a time, avoiding sharp or prolonged turning. Have someone guide you when backing to reduce the risk of an accident.
- Because stopping distance may be increased, vehicle–to–vehicle distance should be increased when towing a trailer. For each 16 km/h (10 mph) of speed, allow at least one vehicle and trailer length between you and the vehicle ahead. Avoid sudden braking as you may skid, resulting in jackknifing and loss of control. This is especially true on wet or slippery surfaces.
- Avoid jerky starts or sudden acceleration. If your vehicle has a manual transmission, prevent excessive clutch slippage by keeping engine rpm low and not racing the engine. Always start out in first gear.
- Avoid jerky steering and sharp turns. The trailer could hit your vehicle in a tight turn. Slow down before making a turn to avoid the necessity of sudden braking.
- Remember that when making a turn, the trailer wheels will be closer than the vehicle wheels to the inside of the turn. Therefore, compensate for this by making a larger than normal turning radius with your vehicle.

- Crosswinds and rough roads will adversely affect handling of your vehicle and trailer, causing sway. Pay attention to the rear from time to time to prepare yourself for being passed by large trucks or buses, which may cause your vehicle and trailer to sway. If swaying happens, firmly grip the steering wheel and reduce speed immediately but gradually. Never increase speed. Steer straight ahead. If you make no extreme correction with the steering or brakes, the vehicle and trailer will stabilize.
- Be careful when passing other vehicles. Passing requires considerable distance. After passing a vehicle, do not forget the length of your trailer and be sure you have plenty of room before changing lanes.
- In order to maintain engine braking efficiency do not use overdrive (automatic transmission) or fifth gear (manual transmission).
- Because of the added load of the trailer, your vehicle’s engine may overheat on hot days (at temperatures over 30°C [85°F]) when going up a long or steep grade with a trailer. If the engine coolant temperature gauge indicates overheating, immediately turn off the air conditioning (if in use), pull off the road and stop in a safe spot. Refer to “If your vehicle overheats” on page 342 in Section 4.
- Always place wheel blocks under both the vehicle and trailer wheels when parking. Apply the parking brake firmly. Put the transmission in “P” (automatic) or in first or reverse (manual). Avoid parking on a slope with a trailer, but if it cannot be avoided, do so only after performing the following:

1. Apply the brakes and hold.
2. Have someone place wheel blocks under both the vehicle and trailer wheels.
3. When the wheel blocks are in place, release your brakes slowly until the blocks absorb the load.
4. Apply the parking brake firmly.
5. Shift into “P” (automatic) or first or reverse (manual) and turn off the engine.

When restarting out after parking on a slope:

1. With the transmission in “P” position (automatic) or the clutch pedal depressed (manual), start the engine. (With an automatic transmission, be sure to keep the brake pedal depressed.)
2. Shift into gear.
3. Release the parking brake (also foot brake on automatic transmission vehicles) and slowly pull or back away from the wheel blocks. Stop and apply your brakes.
4. Have someone retrieve the blocks.

CAUTION

- **Do not exceed 72 km/h (45 mph) or the posted towing speed limit, whichever is lower. Because instability (swaying) of a towing vehicle–trailer combination usually increases as the speed increases, exceeding 72 km/h (45 mph) may cause loss of control.**
- **Slow down and downshift before descending steep or long downhill grades. Do not make sudden downshifts.**
- **Avoid holding the brake pedal down too long or too frequently. This could cause the brakes to overheat and result in reduced braking efficiency.**

How to save fuel and make your vehicle last longer

Improving fuel economy is easy—just take it easy. It will help make your vehicle last longer, too. Here are some specific tips on how to save money on both fuel and repairs:

- **Keep your tires inflated at the correct pressure.** Underinflation causes tire wear and wastes fuel. See page 385 in Section 7–2 for instructions.
- **Do not carry unneeded weight in your vehicle.** Excess weight puts a heavier load on the engine, causing greater fuel consumption.
- **Avoid lengthy warm–up idling.** Once the engine is running smoothly, begin driving—but gently. Remember, however, that on cold winter days this may take a little longer.
- **Keep the automatic transmission selector lever in the “D” position when engine braking is not required.** Driving with the selector lever in a position other than “D” will reduce the fuel economy. (For details, see “Automatic transmission” on page 161 in Section 1–7.)
- **Accelerate slowly and smoothly.** Avoid jackrabbit starts. Get into high gear as quickly as possible.
- **Avoid long engine idling.** If you have a long wait and you are not in traffic, it is better to turn off the engine and start again later.
- **Avoid engine lugging or over–revving.** Use a gear position suitable for the road on which you are travelling.
- **Avoid continuous speeding up and slowing down.** Stop–and–go driving wastes fuel.
- **Avoid unnecessary stopping and braking.** Maintain a steady pace. Try to time the traffic signals so you only need to stop as little as possible or take advantage of through streets to avoid traffic lights. Keep a proper distance from other vehicles to avoid sudden braking. This will also reduce wear on your brakes.
- **Avoid heavy traffic or traffic jams whenever possible.**
- **Do not rest your foot on the clutch or brake pedal.** This causes premature wear, overheating and poor fuel economy.
- **Maintain a moderate speed on highways.** The faster you drive, the greater the fuel consumption. By reducing your speed, you will cut down on fuel consumption.

- **Keep the front wheels in proper alignment.** Avoid hitting the curb and slow down on rough roads. Improper alignment not only causes faster tire wear but also puts an extra load on the engine, which, in turn, wastes fuel.
- **Keep the bottom of your vehicle free from mud, etc.** This not only lessens weight but also helps prevent corrosion.
- **Keep your vehicle tuned–up and in top shape.** A dirty air cleaner, improper valve clearance, dirty plugs, dirty oil and grease, brakes not adjusted, etc. all lower engine performance and contribute to poor fuel economy. For longer life of all parts and lower operating costs, keep all maintenance work on schedule, and if you often drive under severe conditions, see that your vehicle receives more frequent maintenance. (For scheduled maintenance information, please refer to the “Scheduled Maintenance Guide” or “Owner’s Manual Supplement”.)

⚠ CAUTION

Never turn off the engine to coast down hills. Your power steering and brake booster will not function without the engine running. Also, the emission control system operates properly only when the engine is running.

SECTION 4

IN CASE OF AN EMERGENCY

In case of an emergency

If your vehicle will not start 336
If your engine stalls while driving 341
If you cannot increase engine speed 341
If your vehicle overheats 342
If you have a flat tire 343
If your vehicle becomes stuck 353
If your vehicle needs to be towed 353
If you cannot shift automatic transmission selector lever 355
If you lose your keys 356

If your vehicle will not start— (a) Simple checks

Before making these checks, make sure you have followed the correct starting procedure given in “How to start the engine” on page 316 in Section 3 and that you have sufficient fuel. If your vehicle is equipped with the engine immobilizer system, also check whether the other keys will start the engine. If they work, your key may be broken. Have the key checked at your Toyota dealer. If none of your keys work, there may be a malfunction in the immobilizer system. Call your Toyota dealer. (See “Keys” on page 14 or 16 in Section 1–2.)

If the engine is not turning over or is turning over too slowly—

1. Check that the battery terminals are tight and clean.
2. If the battery terminals are O.K., switch on the interior light.
3. With smart key system—If the light is on, you may try emergency start. See “(b) Emergency start” on page 337 for further instructions.
4. If the light is out, dim or goes out when the starter is cranked, the battery is discharged. You may try jump starting. See “(d) Jump starting” on page 338 for further instructions.
5. With smart key system—If the engine does not start even after the battery has been recharged or replaced, see “(e) Starting the engine after a battery discharge” on page 341 for further instruction.

If the light is O.K., but the engine still will not start, it needs adjustment or repair. Call a Toyota dealer or qualified repair shop.

NOTICE

Do not pull– or push–start the vehicle. It may damage the vehicle or cause a collision when the engine starts. Also the three–way catalytic converter may overheat and become a fire hazard.

If the engine turns over at its normal speed but will not start—

1. Set the ignition switch to ACC or off and try starting the engine again.
2. If the engine will not start, the engine may be flooded because of repeated cranking. See “(c) Starting a flooded engine” on page 337 for further instructions.
3. If the engine still will not start, it needs adjustment or repair. Call a Toyota dealer or qualified repair shop.

(b) Emergency start (vehicles with smart key system)

When the engine does not start, the following procedure can be used to start the engine if the vehicle’s starting system and “ENGINE START STOP” switch function normally.

1. Put the transmission in “P”.
2. Set the ignition switch to ACC by pushing the “ENGINE START STOP” switch once.
3. Push and hold the “ENGINE START STOP” switch for about 15 seconds while depressing the brake pedal firmly.

Even if the engine can be started using the above procedure, the system may be malfunctioning. Have the vehicle checked by your Toyota dealer.

If the engine cannot be started using the above procedure, immediately contact your Toyota dealer.

CAUTION

Do not place any objects close to the “ENGINE START STOP” switch. If the object pushes on the switch, an unexpected engine start may result.

(c) Starting a flooded engine

If the engine will not start, your engine may be flooded because of repeated cranking.

With key cylinder–type ignition switch—If this happens, turn the key to “START” with the accelerator pedal fully depressed. Keep the key and accelerator pedal in these positions for 15 seconds and release them. Then try starting the engine with your foot off the accelerator pedal.

With smart key system—If this happens, press the “ENGINE START STOP” switch (engine switch) with the brake pedal and the accelerator pedal fully depressed, and hold the “ENGINE START STOP” switch for about 30 seconds. Then the cranking hold function stops cranking automatically, and you can try starting the engine with your foot off the accelerator pedal.

If the engine does not start, wait a few minutes and try again.

If the engine still will not start, it needs adjustment or repair. Call a Toyota dealer or qualified repair shop for assistance.

NOTICE

With key cylinder–type ignition switch—Do not crank for more than 30 seconds at a time. This may overheat the starter and wiring systems.

(d) Jump starting

To avoid serious personal injury and damage to your vehicle which might result from battery explosion, acid burns, electrical burns, or damaged electronic components, these instructions must be followed precisely.

If you are unsure about how to follow this procedure, we strongly recommend that you seek the help of a competent mechanic or towing service.

⚠ CAUTION

- **Batteries contain sulfuric acid which is poisonous and corrosive. Wear protective safety glasses when jump starting, and avoid spilling acid on your skin, clothing, or vehicle.**
- **If you should accidentally get acid on yourself or in your eyes, remove any contaminated clothing and flush the affected area with water immediately. Then get immediate medical attention. If possible, continue to apply water with a sponge or cloth while enroute to the medical office.**
- **The gas normally produced by a battery will explode if a flame or spark is brought near. Use only standardized jumper cables and do not smoke or light a match while jump starting.**

NOTICE

The battery used for boosting must be 12 V. Do not jump start unless you are sure that the booster battery is correct.

JUMP STARTING PROCEDURE

1. If the booster battery is installed in another vehicle, make sure the vehicles are not touching. Turn off all unnecessary lights and accessories.

   When boosting, use the battery of matching or higher quality. Any other battery may be difficult to jump start with.

   If jump starting is difficult, charge the battery for several minutes.

2. If required, remove all the vent plugs from the booster and discharged batteries. Lay a cloth over the open vents on the batteries. (This helps reduce the explosion hazard, personal injuries and burns.)

3. If the engine in the vehicle with the booster battery is not running, start it and let it run for a few minutes. During jump starting run the engine at about 2000 rpm with the accelerator pedal lightly depressed.

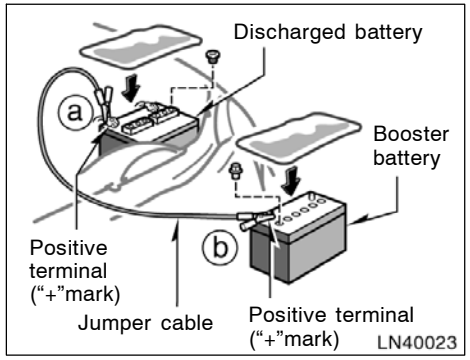

4. Make the cable connections in the order a, b, c, d.

   a. Connect the clamp of the positive (red) jumper cable to the positive (+) terminal on the discharged battery.

   b. Connect the clamp at the other end of the positive (red) jumper cable to the positive (+) terminal on the booster battery.

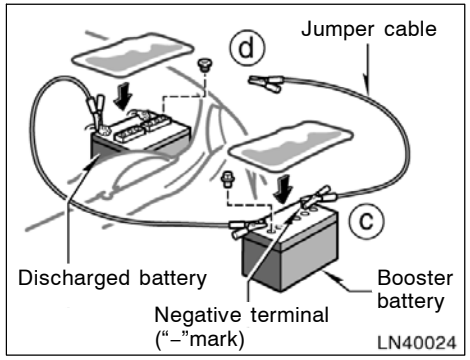

   c. Connect the clamp of the negative (black) jumper cable to the negative (–) terminal on the booster battery.

   d. Connect the clamp at the other end of the negative (black) jumper cable to a solid, stationary, unpainted, metallic point of the vehicle with the discharged battery.

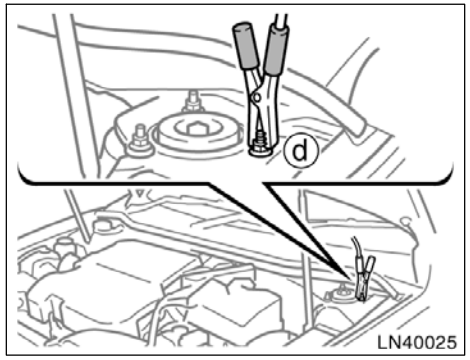

The recommended connecting point is ⓓ in the above illustration.

Do not connect it to or near any part that moves when the engine is cranked.

⚠ CAUTION

When making the connections, to avoid serious injury, do not lean over the battery or accidentally let the jumper cables or clamps touch anything except the correct battery terminals or the ground.

5. Charge the discharged battery with the jumper cables connected for approximately 5 minutes. At this time, run the engine in the vehicle with the booster battery at about 2000 rpm with the accelerator pedal lightly depressed.
6. Start your engine in the normal way. After starting, run it at about 2000 rpm for several minutes with the accelerator pedal lightly depressed.
7. Carefully disconnect the cables in the exact reverse order: the negative cable and then the positive cable.
8. Carefully dispose of the battery cover cloths—they may now contain sulfuric acid.
9. If removed, replace all the battery vent plugs.

With smart key system—The engine may not restart even after battery charging or replacement. If this happens, see “(d) Starting the engine after a battery discharge” described below.

If the cause of your battery discharging is not apparent (for example, lights left on), you should have it checked at your Toyota dealer.

If the first start attempt is not successful...

Check that the clamp on the jumper cables are tight. Recharge the discharged battery with the jumper cables connected for several minutes and restart your engine in the normal way.

If the another attempt is not successful, the battery may be depleted. Have it checked at your Toyota dealer.

(e) Starting the engine after a battery discharge
(vehicles with smart key system)

In the event that the battery is discharged, the engine may not restart even after the battery is recharged or replaced. For safety reasons, the engine may be disabled when battery voltage is extremely low. If the engine is disabled, the start system must be normalized.

To normalize the start system:

1. Shift the transmission to the “P” position and set the ignition switch off.
2. Open and close any of the doors.
3. Start the engine.

If your engine stalls while driving

If your engine stalls while driving...

1. Reduce your speed gradually, keeping a straight line. Move cautiously off the road to a safe place.
2. Turn on your emergency flashers.
3. Set the ignition switch to ACC or off, and try starting the engine again.

If the engine will not start, see “If your vehicle will not start” on page 336 in this Section.

CAUTION

- **If the engine is not running, the power assist for the brakes and steering will not work so steering and braking will be much harder than usual.**
- **Vehicles with smart key system— If the engine stalls while driving, do not open the driver’s door until the vehicle comes to a complete stop. Opening the driver’s door locks the steering wheel, resulting in loss of steering control.**

If you cannot increase engine speed

If engine speed does not increase when the accelerator pedal is depressed, there may be a problem somewhere in the electronic throttle control system.

At this time, vibration may occur. However, if you depress the accelerator pedal more firmly and slowly, you can drive your vehicle at low speeds. Have your vehicle checked by your Toyota dealer as soon as possible.

Even if the abnormality of the electronic throttle control system is corrected during low speed driving, the system may not be recovered until the engine is stopped and the ignition switch is set to ACC or off.

CAUTION

Be especially careful to prevent erroneous pedal operation.

If your vehicle overheats

If your engine coolant temperature gauge indicates overheating, if you experience a loss of power, or if you hear a loud knocking or pinging noise, the engine has probably overheated. You should follow this procedure...

1. Pull safely off the road, stop the vehicle and turn on your emergency flashers. Put the transmission in “P” (automatic) or neutral (manual) and apply the parking brake. Turn off the air conditioning if it is being used.
2. If coolant or steam is boiling out of the radiator or reservoir, stop the engine. Wait until the steam subsides before opening the hood. If there is no coolant boiling over or steam, leave the engine running and make sure the electric cooling fan is operating. If it is not, turn the ignition off.

CAUTION

To help avoid personal injury, keep the hood closed until there is no steam. Escaping steam or coolant is a sign of very high pressure.

3. Look for obvious coolant leaks from the radiator, hoses,and under the vehicle. However, note that water draining from the air conditioning is normal if it has been used.

CAUTION

When the engine is running, keep hands and clothing away from the moving fan and engine drive belts.

4. If the coolant is leaking, stop the engine immediately. Call a Toyota dealer for assistance.
5. If there are no obvious leaks, check the coolant reservoir. If it is dry, add coolant to the reservoir while the engine is running. Fill it about half full. For the coolant type, see “Coolant type selection” on page 382 in Section 7–2.

CAUTION

Do not attempt to remove the radiator cap when the engine and radiator are hot. Serious injury could result from scalding hot fluid and steam blown out under pressure.

6. After the engine coolant temperature has cooled to normal, again check the coolant level in the reservoir. If necessary, bring it up to half full again. Serious coolant loss indicates a leak in the system. You should have it checked as soon as possible at your Toyota dealer.

If you have a flat tire—

1. Reduce your speed gradually, keeping a straight line. Move cautiously off the road to a safe place well away from the traffic. Avoid stopping on the center divider of a highway. Park on a level spot with firm ground.
2. Stop the engine and turn on your emergency flashers.
3. Firmly set the parking brake and put the transmission in “P” (automatic) or reverse (manual).
4. Have everyone get out of the vehicle on the side away from traffic.
5. Read the following instructions thoroughly.

⚠ CAUTION

When jacking, be sure to observe the following to reduce the possibility of death or serious injury:

- **Follow jacking instructions.**
- **Do not put any part of your body under the vehicle supported by the jack. Otherwise, personal injury may occur.**
- **Do not start or run the engine while your vehicle is supported by the jack.**
- **Stop the vehicle on a level firm ground, firmly set the parking brake and put the transmission in “P” (automatic) or reverse (manual). Block the wheel diagonally opposite to the one being changed if necessary.**
- **Make sure to set the jack properly in the jack point. Raising the vehicle with jack improperly positioned will damage the vehicle or may allow the vehicle to fall off the jack and cause personal injury.**
- **Never get under the vehicle when the vehicle is supported by the jack alone.**
- **Use the jack only for lifting your vehicle during wheel changing.**
- **Do not raise the vehicle with someone in the vehicle.**
- **When raising the vehicle, do not place any objects on top of or underneath the jack.**
- **Raise the vehicle only high enough to remove and change the tire.**

NOTICE

Do not continue driving with a deflated tire. Driving even a short distance can damage a tire and wheel beyond repair.

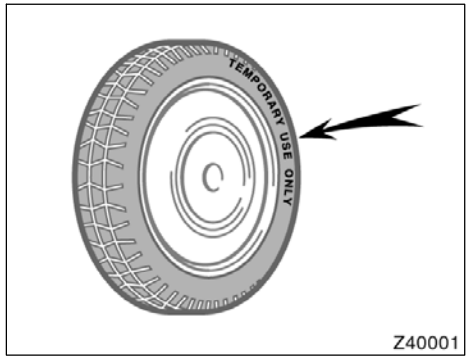

Compact spare tire (on some models)

The compact spare tire is designed for temporary emergency use only.

The compact spare tire is identified by the distinctive wording “TEMPORARY USE ONLY” molded into the side wall of the tire.

The compact spare tire saves space in your luggage compartment, and its lighter weight helps to improve fuel economy and permits easier installation in case of a flat tire.

The compact spare tire can be used many times, if necessary. It has tread life of up to 4800 km (3000 miles) depending on road conditions and your driving habits. When tread wear indicators appear on the tire, replace the tire.

See also the tire information on page 388 in Section 7–2 for details on the tread wear indicators and other service information.

⚠ CAUTION

- **The compact spare tire was designed especially for your Toyota. Do not use it on any other vehicle.**
- **Do not use more than one compact spare tire at the same time.**
- **The pressure for the compact spare tire must be 420 kPa (4.2 kgf/cm^2 or bar, 60 psi).**
- **Do not exceed 80 km/h (50 mph) when driving with the compact spare tire.**

- **Replace the compact spare tire with the standard tire as soon as possible.**
- **Avoid sudden acceleration, sudden deceleration and sharp turns with the compact spare tire.**

NOTICE
Your ground clearance is reduced when the compact spare tire is installed so avoid driving over obstacles and drive slowly on rough, unpaved roads and speed bumps. Also, do not attempt to go through an automatic car wash as the vehicle may get caught, resulting in damage.

—Required tools and spare tire

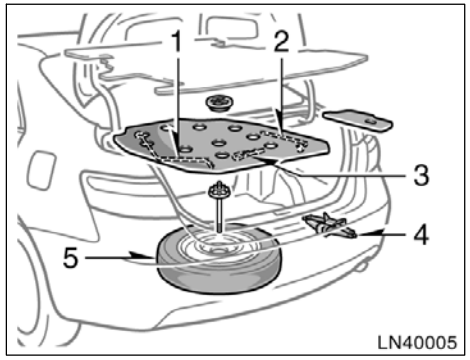

With a compact spare tire

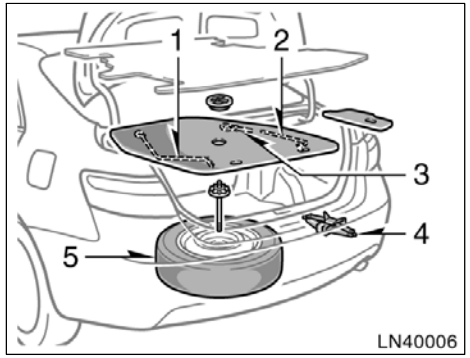

Without a compact spare tire

1. **Get the required tools and spare tire.**
   1. Jack handle
   2. Wheel nut wrench
   3. Transport eyelet (on some models)
   4. Jack
   5. Spare tire

To prepare yourself for an emergency, you should familiarize yourself with the use of the jack, each of the tools and their storage locations.

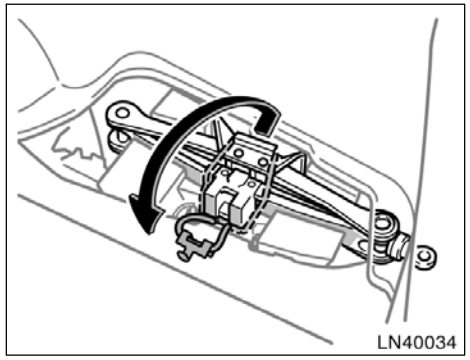

Before removing the jack, unhook the tightening strap.

After storing the jack, make sure it is securely held by the tightening strap.

This prevents the jack from flying forward during a collision or sudden stop.

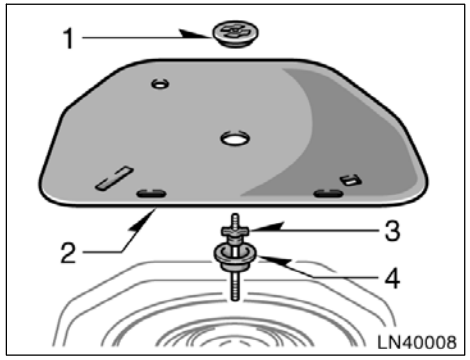

To remove the spare tire:

1. Loosen the nut and remove it.
2. Remove the spare tire cover.
3. Loosen the bolt and remove it.
4. Remove the spacer (with aluminum wheels).

Then take the spare tire out of the vehicle.

When storing the spare tire, put it in place with the outer side of the wheel facing up. Then secure the tire by repeating the above removal steps in reverse order to prevent it from flying forward during a collision or sudden braking.

—Blocking the wheel

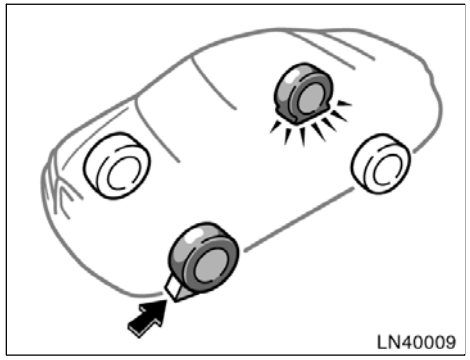

2. Block the wheel diagonally opposite the flat tire to keep the vehicle from rolling when it is jacked up.

When blocking the wheel, place a wheel block in front of one of the front wheels or behind one of the rear wheels.

—Removing wheel ornament (steel wheels only)

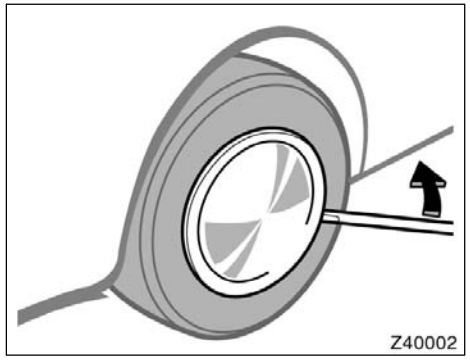

3. Remove the wheel ornament.

Pry off the wheel ornament, using the beveled end of the wheel nut wrench as shown.

⚠ CAUTION

Do not try to pull off the ornament by hand. Take due care in handling the ornament to avoid unexpected personal injury.

—Loosening wheel nuts

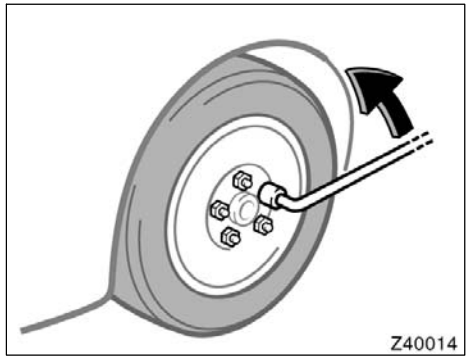

4. Loosen all the wheel nuts.

Always loosen the wheel nuts before raising the vehicle.

Turn the wheel nuts counterclockwise to loosen. To get maximum leverage, fit the wrench to the nut so that the handle is on the right side, as shown above. Grab the wrench near the end of the handle and pull up on the handle. Be careful that the wrench does not slip off the nut.

Do not remove the nuts yet—just unscrew them about one–half turn.

—Positioning the jack

⚠ CAUTION

Never use oil or grease on the bolts or nuts. The nuts may become loose and the wheels may fall off, which could cause a serious accident.

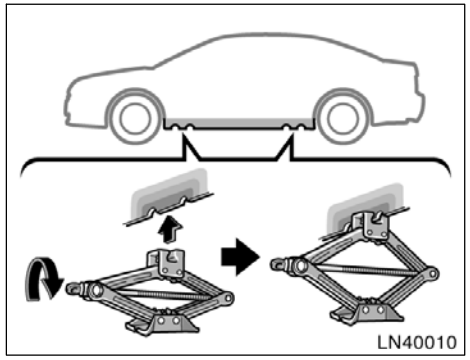

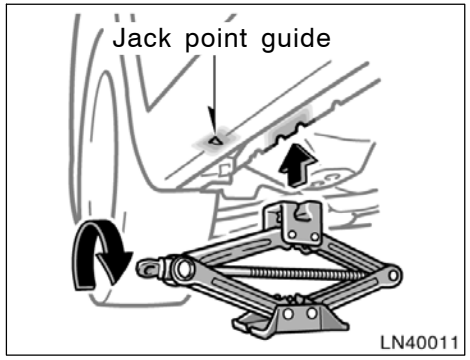

5. Position the jack at the correct jack point as shown.

Make sure the jack is positioned on a level and solid place.

The jack point guides are located under the rocker panel. They indicate the jack point positions.

—Raising your vehicle

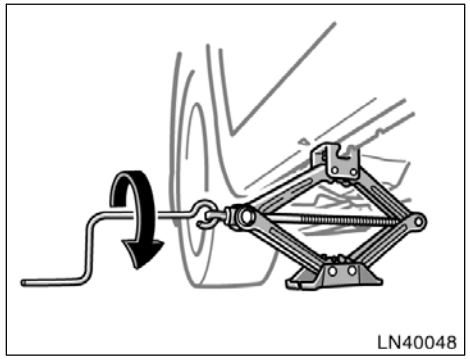

6. After making sure that no one is in the vehicle, raise it high enough so that the spare tire can be installed.

Remember you will need more ground clearance when putting on the spare tire than when removing the flat tire.

To raise the vehicle, insert the jack handle into the jack (it is a loose fit) and turn it clockwise. As the jack touches the vehicle and begins to lift, double–check that it is properly positioned.

⚠ CAUTION

Never get under the vehicle when the vehicle is supported by the jack alone.

—Changing wheels

7. Remove the wheel nuts and change tires.

Lift the flat tire straight off and put it aside.

Roll the spare wheel into position and align the holes in the wheel with the bolts. Then lift up the wheel and get at least the top bolt started through its hole. Wiggle the tire and press it back over the other bolts.

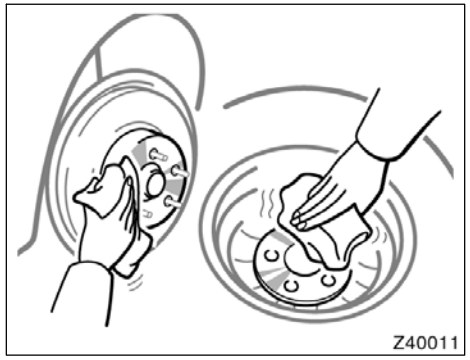

Before putting on wheels, remove any corrosion on the mounting surfaces with a wire brush or such. Installation of wheels without good metal–to–metal contact at the mounting surface can cause wheel nuts to loosen and eventually cause a wheel to come off while driving.

—Reinstalling wheel nuts

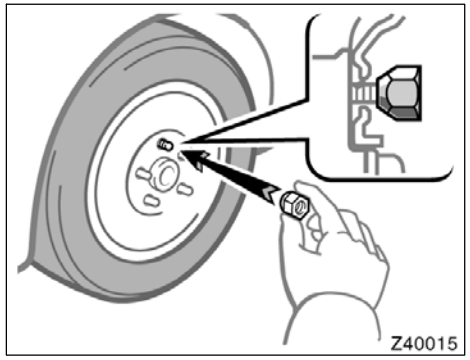

8. Reinstall all the wheel nuts finger tight.

Reinstall the wheel nuts (tapered end inward) and tighten them as much as you can by hand. Press back on the tire and see if you can tighten them more.

⚠ CAUTION

Never use oil or grease on the bolts or nuts. Doing so may lead to overtightening the nuts and damaging the bolts. The nuts may loose and the wheels may fall off, which could cause a serious accident. If there is oil or grease on any bolt or nut, clean it.

—Lowering your vehicle

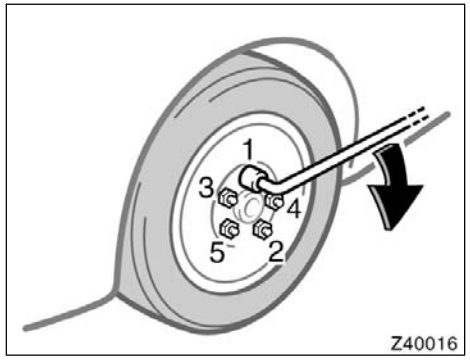

9. Lower the vehicle completely and tighten the wheel nuts.

Turn the jack handle counterclockwise to lower the vehicle.

Use only the wheel nut wrench to tighten the nuts. Do not use other tools or any additional leverage other than your hands, such as a hammer, pipe or your foot. Make sure the wrench is securely engaged over the nut.

Tighten each nut a little at a time in the order shown. Repeat the process until all the nuts are tight.

⚠ CAUTION

- **When lowering the vehicle, make sure all portions of your body and all other persons around will not be injured as the vehicle is lowered to the ground.**
- **Have the wheel nuts tightened with torque wrench to 103 N·m (10.5 kgf·m, 76 ft·lbf), as soon as possible after changing wheels. Otherwise, the nuts may loosen and the wheels may fall off, which could cause a serious accident.**
- **Do not attach a heavily damaged plastic wheel ornament. It may fly off the wheel and cause accidents while the vehicle is moving.**

—Reinstalling wheel ornament (steel wheels only)

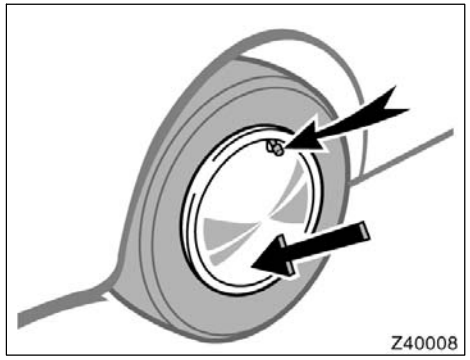

10. Reinstall the wheel ornament.

1. Put the wheel ornament into position.

Align the cutout of the wheel ornament with the valve stem as shown.

2. Press hard firmly on one side of wheel ornament and then firmly tap the other side around the edge of wheel ornament with the heel of your hand to snap into place.

⚠ CAUTION

Take due care in handling the ornament to avoid unexpected personal injury.

—After changing wheels

11. Check the air pressure of the replaced tire.

Adjust the air pressure to the specification designed on page 411 in Section 8. If the pressure is lower, drive slowly to the nearest service station and fill to the correct pressure.

Do not forget to reinstall the tire inflation valve cap as dirt and moisture could get into the valve core and possibly cause air leakage. If the cap is missing, have a new one put on as soon as possible.

12. Restow all the tools, jack and flat tire securely.

As soon after changing wheels as possible, tighten the wheel nuts to the torque specified on page 411 in Section 8 with a torque wrench. Have a technician repair the flat tire and replace the spare tire with it.

Initial adjustment of the tire pressure warning system is necessary after you have replaced your tires or wheels. See “Tire pressure warning system” on page 174 in Section 1–7.

⚠ CAUTION

Before driving, make sure all the tools, jack and flat tire are securely in place in their storage location to reduce the possibility of personal injury during a collision or sudden braking.

If your vehicle becomes stuck

If your vehicle becomes stuck in snow, mud, sand, etc., then you may attempt to rock the vehicle free by moving it forward and backward.

⚠ CAUTION

Do not attempt to rock the vehicle free by moving it forward and backward if people or objects are anywhere near the vehicle. During the rocking operation the vehicle may suddenly move forward or backward as it becomes unstuck, causing injury or damage to nearby people or objects.

NOTICE

If you rock your vehicle, observe the following precautions to prevent damage to the transmission and other parts.

- ***Do not depress the accelerator pedal while shifting the selector lever or before the transmission is completely shifted to forward or reverse gear.***
- ***Do not race the engine and avoid spinning the wheels.***
- ***If your vehicle remains stuck after rocking the vehicle several times, consider other ways such as towing.***

If your vehicle needs to be towed

(a) Towing with wheel lift type truck—

—From front

—From rear

(b) Using flat bed truck

LN40013

If towing is necessary, we recommend you to have it done by your Toyota dealer or a commercial tow truck service. In consultation with them, have your vehicle towed using either (a) or (b).

Proper equipment will help ensure that your vehicle is not damaged while being towed. Commercial operators are generally aware of the state/provincial and local laws pertaining to towing.

Your vehicle can be damaged if it is towed incorrectly. Although most operators know the correct procedure, it is possible to make a mistake. To avoid damage to your vehicle, make sure the following precautions are observed. If necessary, show this page to the tow truck driver.

TOWING PRECAUTIONS:

Use a safety chain system for all towing, and abide by the state/provincial and local laws. The wheels and axle on the ground must be in good condition. If they are damaged, use a towing dolly.

(a) Towing with wheel lift type truck

NOTICE

When lifting wheels, take care to ensure adequate ground clearance for towing at the opposite end of the raised vehicle. Otherwise, the bumper and/or underbody of the towed vehicle will be damaged during towing.

From front—Release the parking brake.

From rear—

- Manual transmission:

  We recommend using a towing dolly under the front wheels. If you do not use a towing dolly, set the ignition switch at ACC and put the transmission in neutral.

NOTICE

Do not tow with the key removed or in the “LOCK” position when towing from the rear without a towing dolly. The steering lock mechanism is not strong enough to hold the front wheels straight.

- Automatic transmission:

  Use a towing dolly under the front wheels.

NOTICE

Never tow a vehicle with an automatic transmission from the rear with the front wheels on the ground, as this may cause serious damage to the transmission.

(b) Using flat bed truck

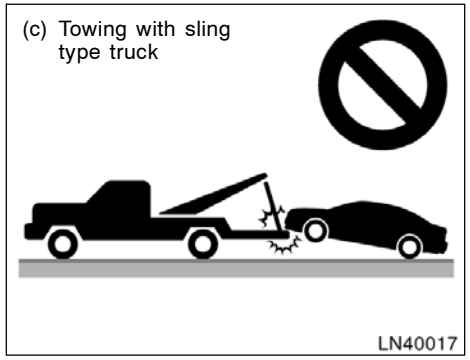

(c) Towing with sling type truck

NOTICE
Do not tow with sling type truck, either from the front or rear. This may cause body damage.

If you cannot shift automatic transmission selector lever

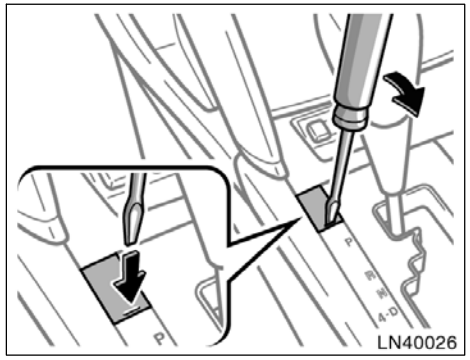

If you cannot shift the selector lever out of “P” position to other positions even though the brake pedal is depressed, use the shift lock override button as follows:

1. **Make sure the engine is off and the parking brake is on.**
2. **Insert the flathead screwdriver or equivalent to the slot of the cover and pry it up.**

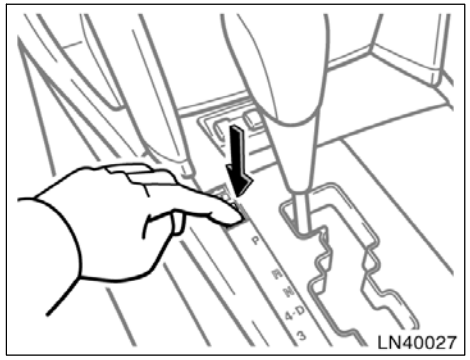

3. **Insert your finger into the hole to push down the shift lock override button. You can shift out of “P” position only while pushing the button.**
4. **Shift into “N” position.**
5. **Insert the cover.**
6. **Start the engine. For your safety, keep the brake pedal depressed.**

Be sure to have the system checked by your Toyota dealer as soon as possible.

If you lose your keys

You can purchase a new key at your Toyota dealer if you can give them the key number and master key.

Vehicles with key cylinder–type ignition switch—Even if you lose only one key, contact your Toyota dealer to make a new key. If you lose all your master keys, you cannot make new keys; the whole engine immobilizer system must be replaced.

Vehicles with smart key system—If you lose any of your keys, contact your Toyota dealer to have new keys made. Lost keys increase the danger of vehicle theft. Bring all of the remaining vehicle keys when you visit your Toyota dealer.

See the suggestion given in “Keys” on page 14 or 16 in Section 1–2.

You can use the wireless remote control system and smart entry and start system by new key, if the systems are equipped with your vehicle. Contact your Toyota dealer for detailed information.

If your keys are locked in the vehicle and you cannot get a duplicate, many Toyota dealers can still open the door for you, using their special tools. If you must break a window to get in, we suggest breaking the smallest side window because it is the least expensive to replace. Be extremely cautious to avoid cuts from the glass.

SECTION 5

CORROSION PREVENTION AND APPEARANCE CARE

Corrosion prevention and appearance care

Protecting your Toyota from corrosion 358
Washing and waxing your Toyota 359
Cleaning the interior 361

Protecting your Toyota from corrosion

Toyota, through the diligent research, design and use of the most advanced technology available, helps prevent corrosion and provides you with the finest quality vehicle construction. Now, it is up to you. Proper care of your Toyota can help ensure long–term corrosion prevention.

The most common causes of corrosion to your vehicle are:

- The accumulation of road salt, dirt and moisture in hard–to–reach areas under the vehicle.
- Chipping of paint, or undercoating caused by minor accidents or by stones and gravel.

Care is especially important if you live in particular areas or operate your vehicle under certain environmental conditions:

- Road salt or dust control chemicals will accelerate corrosion, as will the presence of salt in the air near the sea–coast or in areas of industrial pollution.
- High humidity accelerates corrosion especially when temperatures range just above the freezing point.
- Wetness or dampness to certain parts of your vehicle for an extended period of time, may cause corrosion even though other parts of the vehicle may be dry.
- High ambient temperatures can cause corrosion to those components of the vehicle which do not dry quickly due to lack of proper ventilation.

The above signifies the necessity to keep your vehicle, particularly the underside, as clean as possible and to repair any damage to paint or protective coatings as soon as possible.

To help prevent corrosion on your Toyota, follow these guidelines:

Wash your vehicle frequently. It is, of course, necessary to keep your vehicle clean by regular washing, but to prevent corrosion, the following points should be observed:

- If you drive on salted roads in the winter or if you live near the ocean, you should hose off the undercarriage at least once a month to minimize corrosion.
- High pressure water or steam is effective for cleaning the vehicle’s underside and wheel housings. Pay particular attention to these areas as it is difficult to see all the mud and dirt. It will do more harm than good to simply wet the mud and debris without removing. The lower edge of doors, rocker panels and frame members have drain holes which should not be allowed to clog with dirt as trapped water in these areas can cause corrosion.
- Wash the underside of the vehicle thoroughly when winter is over.

See “Washing and waxing your Toyota” on page 359 for more tips.

Check the condition of your vehicle’s paint and trim. If you find any chips or scratches in the paint, touch them up immediately to prevent corrosion from starting. If the chips or scratches have gone through the bare metal, have a qualified body shop make the repair.

Check the interior of your vehicle. Water and dirt can accumulate under the floor mats and could cause corrosion. Occasionally check under the mats to make sure the area is dry. Be particularly careful when transporting chemicals, cleansers, fertilizers, salt, etc.; these should be transported in proper containers. If a spill or leak should occur, immediately clean and dry the area.

Use mud shields on your wheels. If you drive on salted or gravel roads, mud shields help protect your vehicle. Full–size shields, which come as near to the ground as possible, are the best. We recommend that the fittings and the area where the shields are installed be treated to resist corrosion. Your Toyota dealer will be happy to assist in supplying and installing the shields if they are recommended for your area.

Keep your vehicle in a well ventilated garage or a roofed place. Do not park your vehicle in a damp, poorly ventilated garage. If you wash your vehicle in the garage, or if you drive it covered with water or snow, your garage may be so damp as to cause corrosion. Even if your garage is heated, a wet vehicle can corrode if the ventilation is poor.

Washing and waxing your Toyota

Washing your Toyota

Keep your vehicle clean by regular washing.

The following cases may cause weakness to the paint or corrosion to the body and parts. Wash your vehicle as soon as possible.

- When driving in a coastal area
- When driving on a road sprinkled with antifreeze
- When exposed to coal tar, tree sap, bird droppings and carcass of an insect
- When driving in areas where there is a lot of smoke, soot, dust, iron dust or chemical substances
- When the vehicle becomes remarkably dirty with dust and mud

Hand–washing your Toyota

Work in the shade and wait until the vehicle body is not warm to the touch.

⚠ CAUTION

- **When cleaning under floor or chassis, be careful not to injure your hands.**
- **Exhaust gases cause the exhaust pipe to become quite hot. When washing the vehicle, be careful not to touch the pipe until it has cooled sufficiently, as touching a hot exhaust pipe can cause burns.**

1. Rinse off loose dirt with a hose. Remove any mud or road salt from the underside of the vehicle or the wheel wells.
2. Wash with a mild car–wash soap, mixed according to the manufacturer’s instructions. Use a soft cotton mitt and keep it wet by dipping it frequently into the wash water. Do not rub hard—let the soap and water remove the dirt.

Fuel filler door: Do not apply water (high–pressure car wash, for example) at or near the fuel tank inlet with the fuel filler door opened. If the water enters the air vent, you may experience trouble with refueling or rough engine idling.

Plastic wheel ornaments: The plastic wheel ornaments are damaged easily by organic substances. If any organic substances splash an ornament, be sure to wash them off with water and check if the ornament is damaged.

Aluminum wheels: Use only a mild soap or neutral detergent.

Plastic bumpers: Wash carefully. Do not scrub with abrasive cleaners. The bumper faces are soft.

Exterior lights: Wash carefully. Do not use organic substances or scrub them with a hard brush. This may damage the surfaces of the lights.

Road tar: Remove with turpentine or cleaners that are marked safe for painted surfaces.

3. Rinse thoroughly—dried soap can cause streaking. In hot weather you may need to rinse each section right after you wash it.
4. To prevent water spots, dry the vehicle using a clean soft cotton towel. Do not rub or press hard—you might scratch the paint.

NOTICE

- ***Do not use organic substances (gasoline, kerosene, benzine or strong solvents), which may be toxic or cause damage.***
- ***Do not scrub any part of the vehicle with a hard brush, which may cause damage.***

Automatic car wash

Your vehicle may be washed in an automatic car wash, but remember that the paint can be scratched by some types of brushes, unfiltered washing water, or the washing process itself. Scratching reduces paint durability and gloss, especially on darker colors. The manager of the car wash should be able to advise you whether the process is safe for the paint on your vehicle.

Waxing your Toyota

Polishing and waxing is recommended to maintain the original beauty of your Toyota’s finish.

Apply wax once a month or if the vehicle surface does not repel water well.

1. Always wash and dry the vehicle before you begin waxing, even if you are using a combined cleaner and wax.
2. Use a good quality polish and wax. If the finish has become extremely weathered, use a car–cleaning polish, followed by a separate wax. Carefully follow the manufacturer’s instructions and precautions. Be sure to polish and wax the chrome trim as well as the paint.

Windshield washer nozzles: Make sure that the nozzles do not become blocked when waxing. If a nozzle becomes blocked, contact your Toyota dealer to have the vehicle serviced.

NOTICE

If a nozzle becomes blocked, do not try to clear it with a pin or other object. The nozzle will be damaged.

Exterior lights: Do not apply wax on the surfaces of the lights. Wax may cause damage to the lenses. If you accidentally put wax on the light surfaces, wipe or wash it off.

3. Wax the vehicle again when water does not bead but remains on the surface in large patches.

Cleaning the interior

CAUTION

- **Vehicles with side airbags and curtain shield airbags:**

  Be careful not to splash water or spill liquid on the floor. This may prevent the side airbags from activating correctly, resulting in serious injury.
- **Do not wash the vehicle floor with water, or allow water to get onto the floor when cleaning the vehicle interior or exterior. Water may get into audio components or other electrical components above or under the floor carpet (or mat) and cause a malfunction; and it may cause body corrosion.**

Vinyl interior

The vinyl upholstery may be easily cleaned with a mild soap or detergent and water.

First vacuum over the upholstery to remove loose dirt. Then, using a sponge or soft cloth, apply the soap solution to the vinyl. After allowing it to soak in for a few minutes to loosen the dirt, remove the dirt and wipe off the soap with a clean damp cloth. If all the dirt do not come off, repeat the procedure. Commercial foaming–type vinyl cleaners are also available which work well. Follow the manufacturer’s instructions.

NOTICE

Do not use solvent, thinner, gasoline or window cleaner on the interior.

Carpets

Use a good foam–type shampoo to clean the carpets.

Begin by vacuuming thoroughly to remove as much dirt as possible. Several types of foam cleaners are available; some are in aerosol cans and others are powders or liquids which you mix with water to produce a foam. To shampoo the carpets, use a sponge or brush to apply the foam. Rub in overlapping circles.

Do not apply water—the best results are obtained by keeping the carpet as dry as possible. Read the shampoo instructions and follow them closely.

Seat belts

The seat belts may be cleaned with mild soap and water or with lukewarm water.

Use a cloth or sponge. As you are cleaning, check the belts for excessive wear, fraying, or cuts.

NOTICE

- ***Do not use dye or bleach on the belts—it may weaken them.***
- ***Do not use the belts until they become dry.***

Windows

The windows may be cleaned with any household window cleaner.

NOTICE

When cleaning the inside of the rear window, be careful not to scratch or damage the heater wires or connectors.

Air conditioning control panel, audio panel, instrument panel, console panel and switches.

Use a soft damp cloth for cleaning.

Soak a clean soft cloth in water or lukewarm water then lightly wipe off dirt.

NOTICE

- ***Do not use organic substances (solvents, kerosene, alcohol, gasoline, etc.) or alkaline or acidic solutions. These chemicals can cause discoloring, staining or peeling of the surface.***
- ***If you use cleaners or polishing agents, make sure their ingredients do not include the substances mentioned above.***
- ***If you use a liquid car freshener, do not spill the liquid onto the vehicle’s interior surfaces. It may contain the ingredients mentioned above. Immediately clean any spill using the method mentioned above.***

Leather interior

The leather upholstery may be cleaned with neutral detergent for wool.

Remove dirt using a soft cloth dampened with 5% solution of neutral detergent for wool. Then thoroughly wipe off all traces of detergent with a clean damp cloth.

After cleaning or whenever any part of the leather gets wet, dry with a soft clean cloth. Allow the leather to dry in a ventilated shaded area.

NOTICE

- ***If a stain should fail to come out with a neutral detergent, apply a cleaner that does not contain an organic solvent.***
- ***Never use organic substances such as benzine, alcohol or gasoline, or alkaline or acid solutions for cleaning the leather as these could cause discoloring.***
- ***Use of a nylon brush or synthetic fiber cloth, etc. may scratch the fine grained surface of the leather.***
- ***Mildew may develop on soiled leather upholstery. Be especially careful to avoid oil spots. Try to keep your upholstery always clean.***
- ***Long exposure to direct sunlight may cause the leather surface to harden and shrink. Keep your vehicle in a shaded area, especially in the summer.***
- ***The interior of your vehicle is apt to heat up on hot summer days, so avoid placing on the upholstery items made of vinyl or plastic or containing wax as these tend to stick to leather when warm.***
- ***Improper cleaning of the leather upholstery could result in discoloration or staining.***

If you have any questions about the cleaning of your Toyota, your local Toyota dealer will be pleased to answer them.

SECTION 6

VEHICLE MAINTENANCE AND CARE

Vehicle maintenance and care

Maintenance requirements 366
General maintenance 367
Does your vehicle need repairing? 369
Emissions Inspection and Maintenance (I/M) programs 370

For scheduled maintenance information, please refer to the “Scheduled Maintenance Guide” or “Owner’s Manual Supplement”.

Maintenance requirements

Your Toyota vehicle has been designed for fewer maintenance requirements with longer service intervals to save both your time and money. However, each regular maintenance, as well as day–to–day care, is more important than ever before to ensure smooth, trouble–free, safe, and economical drivings.

It is the owner’s responsibility to make sure the specified maintenance, including general maintenance service, is performed. Note that both the new vehicle and emission control system warranties specify that proper maintenance and care must be performed. See “Owner’s Warranty Information Booklet” or “Owner’s Manual Supplement” for complete warranty information.

General maintenance

General maintenance items are those day–to–day care practices that are important to your vehicle for proper operation. It is the owner’s responsibility to insure that the general maintenance items are performed regularly.

These checks or inspections can be done either by yourself or a qualified technician, or if you prefer, your Toyota dealer will be pleased to do them at a nominal cost.

Scheduled maintenance

The scheduled maintenance items listed in the “Scheduled Maintenance Guide” or “Owner’s Manual Supplement” are those required to be serviced at regular intervals.

For details of your maintenance schedule, read the “Scheduled Maintenance Guide” or “Owner’s Manual Supplement”.

It is recommended that any replacement parts used for maintenance or for the repair of the emission control system be Toyota supplied.

The owner may elect to use non–Toyota supplied parts for replacement purposes without invalidating the emission control system warranty. However, use of replacement parts which are not of equivalent quality may impair the effectiveness of the emission control systems.

You may also elect to have maintenance, replacement, or repair of the emission control devices and system performed by any automotive repair establishment or individual without invalidating this warranty. See “Owner’s Warranty Information Booklet” or “Owner’s Manual Supplement” for complete warranty information.

Where to go for service?

Toyota technicians are well–trained specialists and are kept up to date with the latest service information through technical bulletins, service tips, and in–dealership training programs. They learn to work on Toyotas before they work on your vehicle, rather than while they are working on it.

You can be confident that your Toyota dealer’s service department performs the best job to meet the maintenance requirements on your vehicle—reliably and economically.

Your copy of the repair order is proof that all required maintenance has been performed for warranty coverage. If any problems should arise with your vehicle while under warranty, your Toyota dealer will promptly take care of it. Again, be sure to keep a copy of the repair order for any service performed on your Toyota.

General maintenance

What about do–it–yourself maintenance?

Many of the maintenance items are easy to do yourself if you have a little mechanical ability and a few basic automotive tools. Simple instructions for how to perform them are presented on page 371 in Section 7.

If you are a skilled do–it–yourself mechanic, the Toyota service manuals are recommended. Please be aware that do–it–yourself maintenance can affect your warranty coverage. See “Owner’s Warranty Information Booklet” or “Owner’s Manual Supplement” for the details.

Listed below are the general maintenance items that should be performed as frequently as specified. In addition to checking the items listed, if you notice any unusual noise, smell or vibration, you should investigate the cause or take your vehicle to your Toyota dealer or a qualified service shop immediately. It is recommended that any problem you notice be brought to the attention of your dealer or the qualified service shop for their advice.

⚠ CAUTION

Make these checks only with adequate ventilation if you run the engine.

IN THE ENGINE COMPARTMENT

Items listed below should be checked from time to time, e.g. each time when refueling.

Washer fluid
Make sure there is sufficient fluid in the tank. See page 399 in Section 7–3 for additional information.

Engine coolant level
Make sure the coolant level is between the “F” and “L” lines on the see–through reservoir when the engine is cold. See page 382 in Section 7–2 for additional information.

Radiator, condenser and hoses
Check that the front of the radiator and condenser are clean and not blocked with leaves, dirt or insects. See page 383 in Section 7–2 for additional information.

Battery condition
Check the battery condition by the indicator color. See page 396 in Section 7–3 for additional information.

Brake fluid level
Make sure the brake fluid level is correct. See page 383 in Section 7–2 for additional information.

Engine oil level
Check the level on the dipstick with the engine turned off and the vehicle parked on a level spot. See page 380 in Section 7–2 for additional information.

Power steering fluid level
Check the level through the reservoir. The level should be in the “HOT” or “COLD” range depending on the fluid temperature. See page 384 in Section 7–2 for additional information.

Exhaust system
If you notice any change in the sound of the exhaust or smell exhaust fumes, have the cause located and corrected immediately. (See “Engine exhaust cautions” on page 290 in Section 2.)

INSIDE THE VEHICLE

Items listed below should be checked regularly, e.g. while performing periodic services, cleaning the vehicle, etc.

Lights
Make sure the headlights, stop lights, tail lights, turn signal lights, and other lights are all working. Check headlight aim.

Service reminder indicators and warning buzzers
Check that all service reminder indicators and warning buzzers function properly.

Steering wheel
Be alert for changes in steering condition, such as hard steering or strange noise.

Seats
Check that all front seat controls such as seat adjusters, seatback recliner, etc. operate smoothly and that all latches lock securely in any position. Check that the head restraints move up and down smoothly and that the locks hold securely in any latched position. For folding–down rear seatbacks, check that the latches lock securely.

Seat belts
Check that the seat belt system such as buckles, retractors and anchors operate properly and smoothly. Make sure that the belt webbings not cut, frayed, worn or damaged.

Accelerator pedal
Check the pedal for smooth operation and uneven pedal effort or catching.

Clutch pedal
Check the pedal for smooth operation.

Brake pedal
Check the pedal for smooth operation and that the pedal has the proper clearance. Check the brake booster function.

Brakes
In a safe place, check that the brakes do not pull to one side when applied.

Parking brake
Check that the lever or pedal has the proper travel and that, on a safe incline, your vehicle is held securely with only the parking brake applied.

Automatic transmission “Park” mechanism
Check the lock release button of the selector lever for proper and smooth operation. On a safe incline, check that your vehicle is held securely with the selector lever in “P” position and all brakes released.

OUTSIDE THE VEHICLE

Items listed below should be performed from time to time, unless otherwise specified.

Fluid leaks
Check underneath for leaking fuel, oil, water or other fluid after the vehicle has been parked for a while. If you smell fuel fumes or notice any leak, have the cause found and corrected immediately.

Doors and engine hood
Check that all doors including trunk lid operate smoothly and all latches lock securely. Make sure the engine hood secondary latch secures the hood from opening when the primary latch is released.

Tire inflation pressure
Check the pressure with a gauge every two weeks, or at least once a month. See page 385 in Section 7–2 for additional information.

Tire surface and wheel nuts
Check the tires carefully for cuts, damage or excessive wear. See page 388 in Section 7–2 for additional information. When checking the tires, make sure no nuts are missing, and check the nuts for looseness. Tighten them if necessary.

Tire rotation
Rotate the tires according to the maintenance schedule. (For scheduled maintenance information, please refer to the “Scheduled Maintenance Guide” or “Owner’s Manual Supplement”.) See page 390 in Section 7–2 for additional information.

Does your vehicle need repairing?

Be on the alert for changes in performance, sounds, and visual tip–offs that indicate service is needed. Some important clues are as follows:

- Engine missing, stumbling, or pinging
- Appreciable loss of power
- Strange engine noises
- A leak under the vehicle (however, water dripping from the air conditioning after use is normal.)
- Change in exhaust sound (This may indicate a dangerous carbon monoxide leak. Drive with the windows open and have the exhaust system checked immediately.)
- Flat–looking tire; excessive tire squeal when cornering; uneven tire wear
- Vehicle pulls to one side when driving straight on a level road
- Strange noises related to suspension movement
- Loss of brake effectiveness; spongy feeling brake or clutch pedal; pedal almost touches floor; vehicle pulls to one side when braking
- Engine coolant temperature continually higher than normal

If you notice any of these clues, take your vehicle to your Toyota dealer as soon as possible. It probably needs adjustment or repair.

CAUTION

Do not continue driving with the vehicle unchecked. It could result in serious vehicle damage and possibly personal injury.

Emissions Inspection and Maintenance (I/M) programs

Some states have vehicle emission inspection programs which include OBD (On–Board Diagnostics) checks.

The OBD system monitors the operation of the emission control system. When the OBD system determines that a problem exists somewhere in the emission control system, the malfunction indicator lamp comes on. In this case, your vehicle may not pass the I/M test and need to be repaired. Contact your Toyota dealer to service the vehicle.

Even if the malfunction indicator lamp does not come on, your vehicle may not pass the I/M test as readiness codes have not been set in the OBD system.

Readiness codes are automatically set during ordinary driving. However, when the battery is disconnected or run down, the codes are erased. Also, depending on your driving habits, the codes may not be completely set.

Also, if the malfunction indicator lamp had come on recently due to temporary malfunction such as a loose fuel tank cap, your vehicle may not pass the I/M test.

The malfunction indicator lamp will go off after taking several driving trips, but the error code in the OBD system will not be cleared unless about 40 trips or more are taken.

If your vehicle does not pass the I/M test even the malfunction indicator lamp does not come on, contact your Toyota dealer to prepare the vehicle for re–testing.

SECTION 7 – 1

DO–IT–YOURSELF MAINTENANCE

Introduction

Engine compartment overview 372
Fuse locations 374
Do–it–yourself service precautions 374
Positioning the jack 376
Parts and tools 378

Engine compartment overview

▶2.4 L 4–cylinder (2AZ–FE) engine

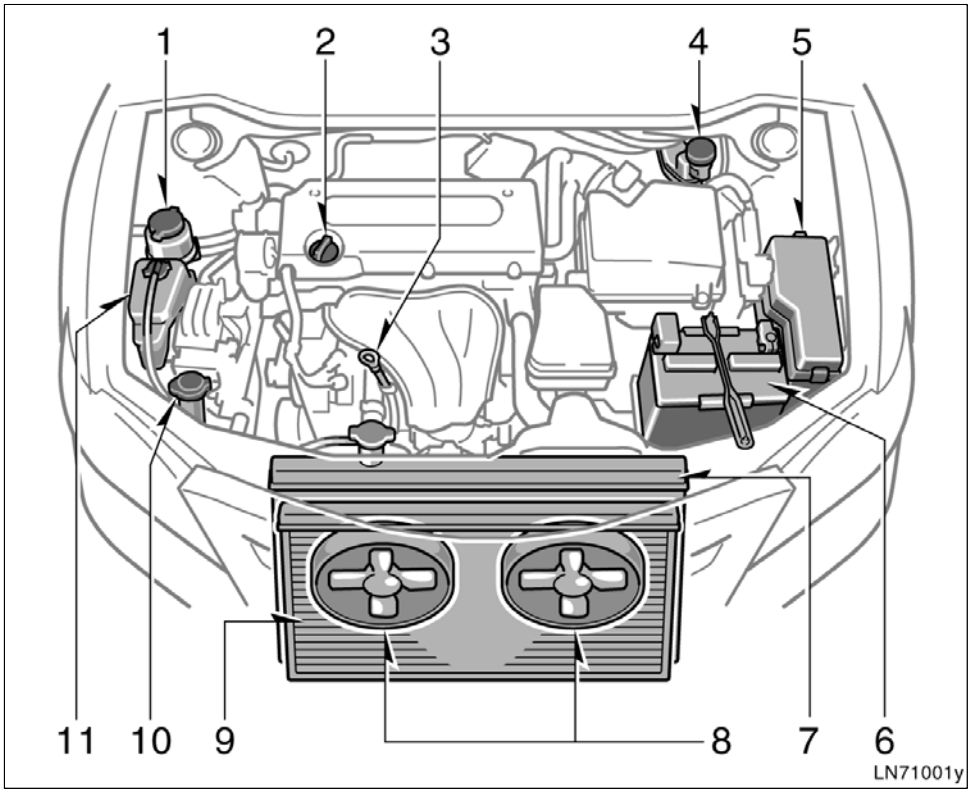

1. Power steering fluid reservoir
2. Engine oil filler cap
3. Engine oil level dipstick
4. Brake fluid reservoir
5. Fuse block
6. Battery
7. Radiator
8. Electric cooling fans
9. Condenser
10. Windshield washer fluid tank
11. Engine coolant reservoir

▶3.5 L V6 (2GR-FE) engine

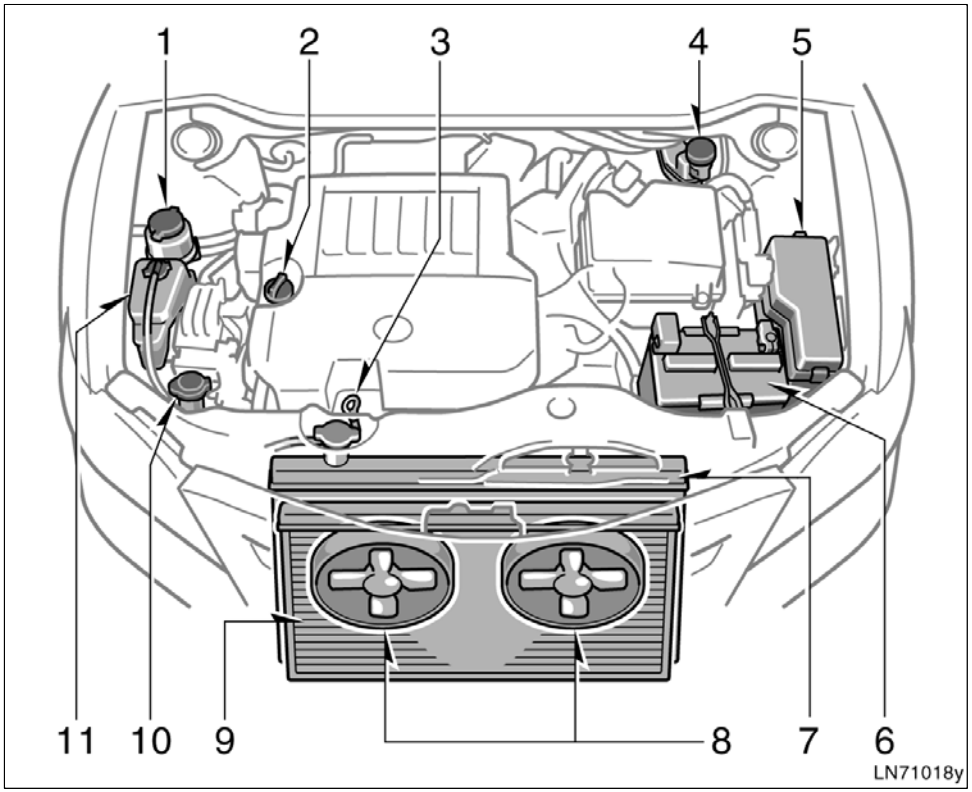

1. Power steering fluid reservoir
2. Engine oil filler cap
3. Engine oil level dipstick
4. Brake fluid reservoir
5. Fuse block
6. Battery
7. Radiator
8. Electric cooling fans
9. Condenser
10. Windshield washer fluid tank
11. Engine coolant reservoir

Fuse locations

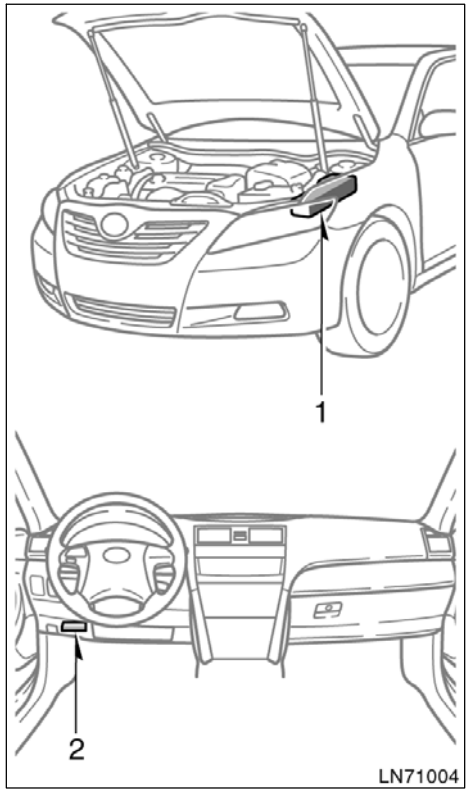

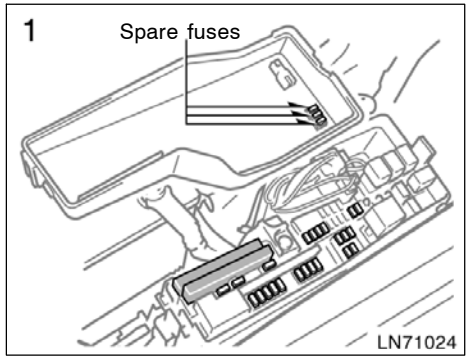

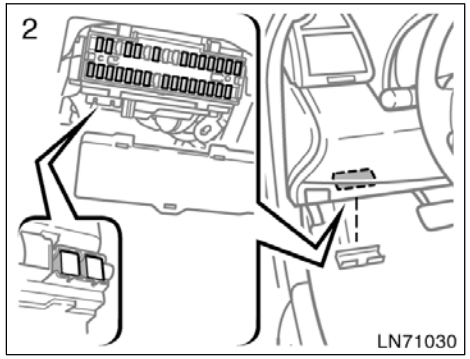

Do–it–yourself service precautions

If you perform maintenance by yourself, be sure to follow the correct procedure given in this Section.

You should be aware that improper or incomplete servicing may result in operating problems.

Performing do–it–yourself maintenance during the warranty period may affect your warranty coverage. Read the separate Toyota Warranty statement for details and suggestions.

This Section gives instructions only for those items that are relatively easy for an owner to perform. As explained in Section 6, there are still a number of items that must be done by a qualified technician with special tools.

For information on tools and parts for do–it–yourself maintenance, see “Parts and tools” on page 378 in this Section.

Utmost care should be taken when working on your vehicle to prevent accidental injury. Here are a few precautions that you should be especially careful to observe:

⚠ CAUTION

- When the engine is running, keep hands, clothing, and tools away from the moving fan and engine drive belts. (Removing rings, watches, and ties is advisable.)
- Right after driving, the engine compartment—the engine, radiator, exhaust manifold and spark plug boots, etc.—will be hot. So be careful not to touch them. Oil, fluids and spark plugs may also be hot.
- If the engine is hot, do not remove the radiator cap or loosen the drain plugs to prevent burning yourself.
- Do not leave anything that may burn easily, such as paper or rags, in the engine compartment.
- Do not smoke, cause sparks or allow open flames around fuel or the battery. Their fumes are flammable.
- Do not get under your vehicle with just the body jack supporting it. Always use automotive jack stands or other solid supports.
- Be sure that the ignition is off if you work near the electric cooling fans or radiator grille. With the ignition on, the electric cooling fans will automatically start to run if the engine coolant temperature is high and/or the air conditioning is on.
- Use eye protection whenever you work on or under your vehicle where you may be exposed to flying or falling material, fluid spray, etc.
- Used engine oil contains potentially harmful contaminants which may cause skin disorders such as inflammation or skin cancer, so care should be taken to avoid prolonged and repeated contact with it. To remove used engine oil from your skin, wash thoroughly with soap and water.
- Do not leave used oil within the reach of children.
- Be extremely cautious when working on the battery. It contains poisonous and corrosive sulfuric acid.
- Dispose of used oil and filter only in a safe and acceptable manner. Do not dispose of used oil and filter in household trash, in sewers or onto the ground. Call your dealer or a service station for information concerning recycling or disposal.

NOTICE

- *Remember that battery and ignition cables carry high currents or voltages. Be careful of accidentally causing a short circuit.*
- *Add only “Toyota Super Long Life Coolant” or similar high quality ethylene glycol based non–silicate, non–amine, non–nitrite, and non–borate coolant with long–life hybrid organic acid technology to fill the radiator. “Toyota Super Long Life Coolant” is a mixture of 50% coolant and 50% deionized water (for the U.S.A.) or 55% coolant and 45% deionized water (for Canada).*
- *If you spill some of the coolant, be sure to wash it off with water to prevent it from damaging the parts or paint.*
- *Do not allow dirt or anything else to fall through the spark plugholes.*
- *Use only spark plugs of the specified type. Using other types will cause engine damage, loss of performance or radio noise.*
- *Do not reuse iridium–tipped spark plugs by cleaning or regapping.*

- *Do not overfill automatic transmission fluid, or the transmission could be damaged.*
- *Do not drive with the air cleaner filter removed, or excessive engine wear could result. Also backfiring could cause a fire in the engine compartment.*
- *Be careful not to scratch the glass surface with the wiper frame.*
- *When closing the engine hood, check to see that you have not forgotten any tools, rags, etc.*

Positioning the jack

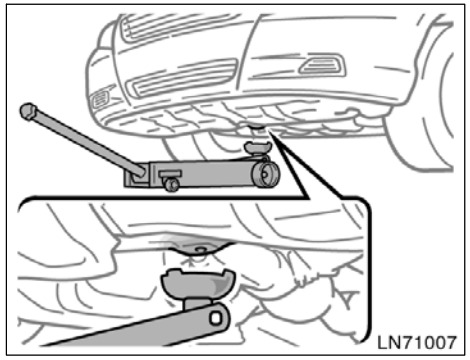

Front

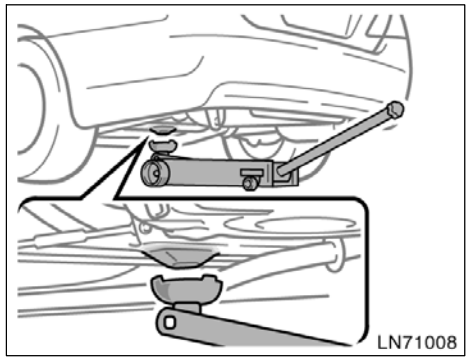

Rear (2.4 L 4–cylinder [2AZ–FE] engine)

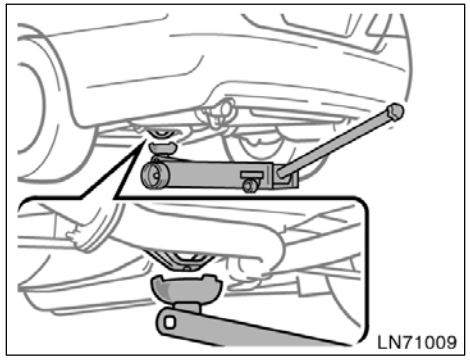

Rear (3.5 L V6 [2GR-FE] engine)

When jacking up your vehicle with the jack, position the jack correctly as shown in the illustrations.

CAUTION

When jacking, be sure to observe the following to reduce the possibility of death or serious injury:

- Follow jacking instructions.
- Do not put any part of your body under the vehicle supported by the jack. Personal injury may occur.
- Do not start or run the engine while your vehicle is supported by the jack.
- Stop the vehicle on a level firm ground, firmly set the parking brake and put the transmission in “P” (automatic) or reverse (manual). Block the wheels on the opposite side of the jack up point if necessary.
- Make sure to set the jack properly in the jack point. Raising the vehicle with jack improperly positioned will damage the vehicle or may allow the vehicle to fall off the jack and cause personal injury.
- Never get under the vehicle when the vehicle is supported by the jack alone; use vehicle support stands.
- Do not raise the vehicle with someone in the vehicle.
- When raising the vehicle, do not place any objects on top of or underneath the jack.

NOTICE

Make sure to place the jack correctly, or your vehicle may be damaged.

Parts and tools

Here is a list of parts and tools you will need to perform do–it–yourself maintenance. Remember all Toyota parts are designed in metric sizes, so your tools must be metric.

CHECKING THE ENGINE OIL LEVEL

Parts (if level is low):

- “Toyota Genuine Motor Oil” or equivalent

  See page 381 in Section 7–2 for details about engine oil selection.

Tools:

- Rag or paper towel
- Funnel (only for adding oil)

CHECKING THE ENGINE COOLANT LEVEL

Parts (if level is low):

- “Toyota Super Long Life Coolant” or similar high quality ethylene glycol based non–silicate, non–amine, non–nitrite, and non–borate coolant with long–life hybrid organic acid technology.

  “Toyota Super Long Life Coolant” is a mixture of 50% coolant and 50% deionized water (for the U.S.A.) or 55% coolant and 45% deionized water (for Canada).

Tools:

- Funnel (only for adding coolant)

CHECKING BRAKE FLUID

Parts (if level is low):

- SAE J1703 or FMVSS No.116 DOT 3 brake fluid

Tools:

- Rag or paper towel
- Funnel (only for adding fluid)

CHECKING POWER STEERING FLUID

Parts (if level is low):

- Automatic transmission fluid DEXRON®II or III

Tools:

- Rag or paper towel
- Funnel (only for adding fluid)

CHECKING BATTERY CONDITION

Tools:

- Warm water
- Baking soda
- Grease
- Conventional wrench (for terminal clamp bolts)

CHECKING AND REPLACING FUSES

Parts (if replacement is necessary):

- Genuine Toyota fuse or equivalent with same amperage rating as original

ADDING WASHER FLUID

Parts:

- Water
- Washer fluid containing antifreeze (for winter use)

Tools:

- Funnel

REPLACING LIGHT BULBS

Parts:

- Bulb with same number and wattage rating as original (See charts in “Replacing light bulbs” on page 400 in Section 7–3.)

SECTION 7-2

DO-IT-YOURSELF MAINTENANCE

Engine and Chassis

Checking the engine oil level 380
Checking the engine coolant level 382
Checking the radiator and condenser 383
Checking brake fluid 383
Checking power steering fluid 384
Checking tire inflation pressure 385
Checking and replacing tires 388
Rotating tires 390
Installing snow tires and chains 391
Replacing wheels 393
Aluminum wheel precautions 393

Checking the engine oil level

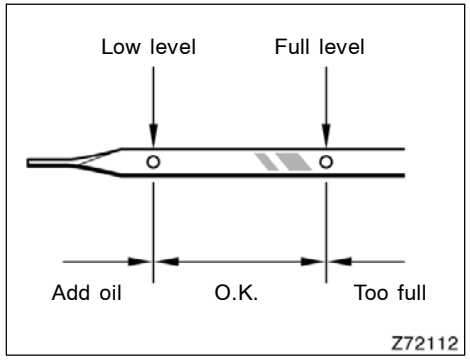

With the engine at operating temperature and turned off, check the oil level on the dipstick.

1. To get a correct reading, the vehicle should be on level ground. After turning off the engine, wait a few minutes for the oil to drain back into the bottom of the engine.
2. Pull the dipstick out, hold a rag under the end and wipe it clean.
3. Reinsert the dipstick—push it in as far as it will go, or the reading will not be correct.
4. Pull the dipstick out and look at the oil level while holding a rag under the end.

⚠ CAUTION

Be careful not to touch the hot exhaust manifold.

NOTICE

Be careful not to drop engine oil on the vehicle components.

If the oil level is below or only slightly above the low level line, add engine oil of the same type as already in the engine.

Remove the oil filler cap and add engine oil in small quantities at a time, checking the dipstick. We recommend that you use a funnel when adding oil.

The approximate quantity of oil needed to raise the level between low and full on the dipstick is indicated as follows:

2.4 L 4–cylinder (2AZ–FE) engine
1.1 L (1.2 qt., 1.0 Imp. qt.)
3.5 L V6 (2GR–FE) engine
1.5 L (1.6 qt., 1.3 Imp. qt.)

For the engine oil capacity, see “Service specifications” on page 407 in Section 8.

When the level reaches within the correct range, install the filler cap hand–tight.

NOTICE

- ***Be careful not to spill engine oil on the vehicle components.***
- ***Avoid overfilling, or the engine could be damaged.***
- ***Check the oil level on the dipstick once again after adding the oil.***

ENGINE OIL SELECTION

“Toyota Genuine Motor Oil” is used in your Toyota vehicle. Use Toyota approved “Toyota Genuine Motor Oil” or equivalent to satisfy the following grade and viscosity.

Oil grade:
ILSAC multigrade engine oil

Recommended viscosity:

2.4 L 4–cylinder (2AZ–FE) engine
SAE 5W–20 or 0W–20

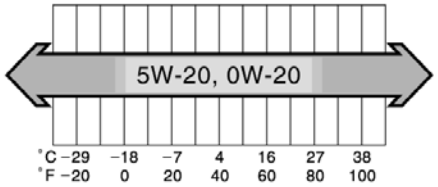

SAE 5W–20 or 0W–20 engine oil may be used. However, SAE 0W–20 is the best choice for good fuel economy and good starting in cold weather.

3.5 L V6 (2GR–FE) engine
SAE 5W–30

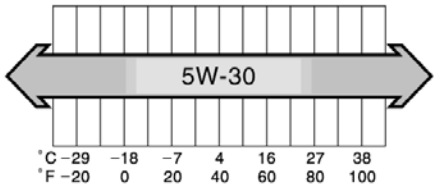

SAE 5W–30 is the best choice for good fuel economy and good starting in cold weather.

If SAE 5W–30 is not available, SAE 10W–30 may be used. However, it should be replaced with SAE 5W–30 at the next oil change.

API-02

Oil identification mark

The ILSAC (International Lubricant Standardization and Approval Committee) Certification Mark is added to some oil containers to help you select the oil you should use.

To ensure excellent lubrication performance for your engine, “Toyota Genuine Motor Oil” is available, which has been specifically tested and approved for all Toyota engines.

Please contact your Toyota dealer for further details about “Toyota Genuine Motor Oil”.

Checking the engine coolant level

Look at the see–through coolant reservoir when the engine is cold. The coolant level is satisfactory if it is between the “F” and “L” lines on the reservoir. If the level is low, add the coolant. (For the coolant type, see “Coolant type selection” described below.)

The coolant level in the reservoir will vary with engine temperature. However, if the level is on or below the “L” line, add coolant. Bring the level up to the “F” line.

If the coolant level drops within a short time after replenishing, there may be a leak in the system. Visually check the radiator, hoses, engine coolant filler cap, radiator cap and drain cock and water pump.

If you can find no leak, have your Toyota dealer test the cap pressure and check for leaks in the cooling system.

⚠ CAUTION

To prevent burning yourself, do not remove the radiator cap when the engine is hot.

Coolant type selection

Use of improper coolants may damage your engine cooling system.

Only use “Toyota Super Long Life Coolant” or similar high quality ethylene glycol based non–silicate, non–amine, non–nitrite, and non–borate coolant with long–life hybrid organic acid technology. (Coolant with long–life hybrid organic acid technology is a combination of low phosphates and organic acids.)

For the U.S.A.—“Toyota Super Long Life Coolant” is a mixture of 50% coolant and 50% deionized water. This coolant provides protection down to about –35°C (–31°F).

For Canada—“Toyota Super Long Life Coolant” is a mixture of 55% coolant and 45% deionized water. This coolant provides protection down to about –42°C (–44°F).

NOTICE

Do not use plain water alone.

Toyota recommends “Toyota Super Long Life Coolant”, which has been tested to ensure that it will not cause corrosion nor result in malfunction of your engine coolant system with proper usage. “Toyota Super Long Life Coolant” is formulated with long–life hybrid organic acid technology and has been specifically designed to avoid engine cooling system malfunction on Toyota vehicles.

Please contact your Toyota dealer for further details.

Checking the radiator and condenser

If any of the above parts are extremely dirty or you are not sure of their condition, take your vehicle to a Toyota dealer.

⚠ CAUTION

To prevent burning yourself, be careful not to touch the radiator or condenser when the engine is hot.

NOTICE

To prevent damage to the radiator and condenser, do not perform the work by yourself.

Checking brake fluid

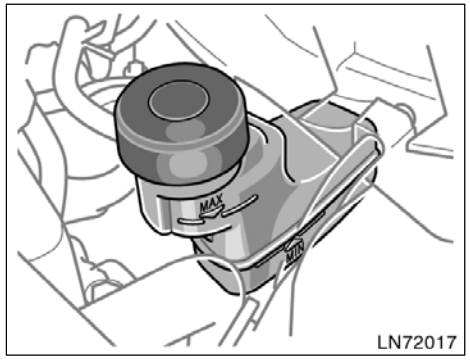

To check the fluid level, simply look at the see–through reservoir. The level should be between the “MAX” and “MIN” lines on the reservoir.

It is normal for the brake fluid level to go down slightly as the brake pads wear. So be sure to keep the reservoir filled.

If the reservoir needs frequent refilling, it may indicate a serious mechanical problem.

If the level is low, add SAE J1703 or FMVSS No.116 DOT 3 brake fluid to the brake reservoir.

Remove and replace the reservoir cap by hand. Fill the brake fluid to the dotted line. This brings the fluid to the correct level when you put the cap back on.

Use only newly opened brake fluid. Once opened, brake fluid absorbs moisture from the air, and excess moisture can cause a dangerous loss of braking.

CAUTION

Take care when filling the reservoir because brake fluid can harm your hands or eyes. If fluid gets on your hands or in your eyes, flush the affected area with clean water immediately. If you still feel uncomfortable with your hands or eyes, go to the doctor.

NOTICE

If you spill some of the fluid, be sure to wipe it off to prevent it from damaging the parts or paintwork.

Checking power steering fluid

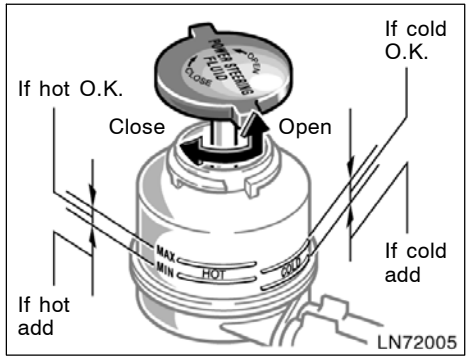

Check the fluid level through the reservoir. If necessary, add automatic transmission fluid DEXRON®II or III.

If the vehicle has been driven around 80 km/h (50 mph) for 20 minutes (a little more in frigid temperatures), the fluid is hot (60°C—80°C or 140°F—175°F). You may also check the level when the fluid is cold (about room temperature, 10°C—30°C or 50°F—85°F) if the engine has not been run for about five hours.

Clean all dirt from the outside of the reservoir tank and look at the fluid level. If the fluid is cold, the level should be in the “COLD” range. Similarly, if it is hot, the fluid level should be in the “HOT” range. If the level is at the low side of either range, add automatic transmission fluid DEXRON®II or III to bring the level within the range.

To remove the reservoir cap, turn it counterclockwise and lift up. To reinstall it, turn it clockwise. After replacing the reservoir cap, visually check the steering box case, vane pump and hose connections for leaks or damage.

CAUTION

The reservoir tank may be hot so be careful not to burn yourself.

NOTICE

Avoid overfilling, or the power steering could be damaged.

Checking tire inflation pressure

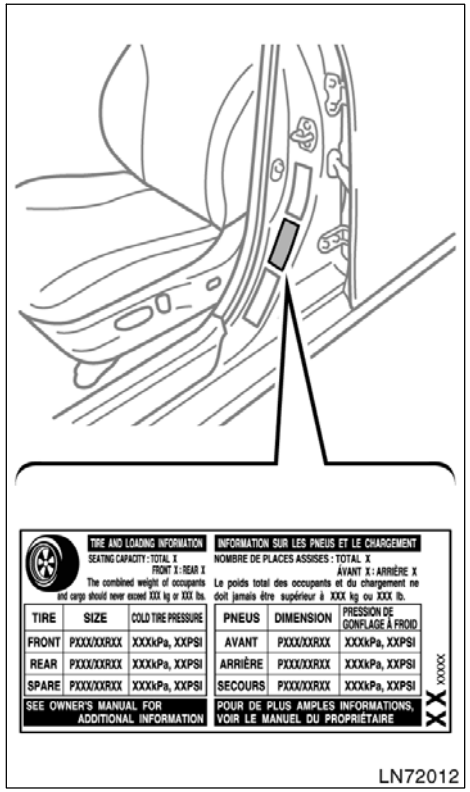

Type A

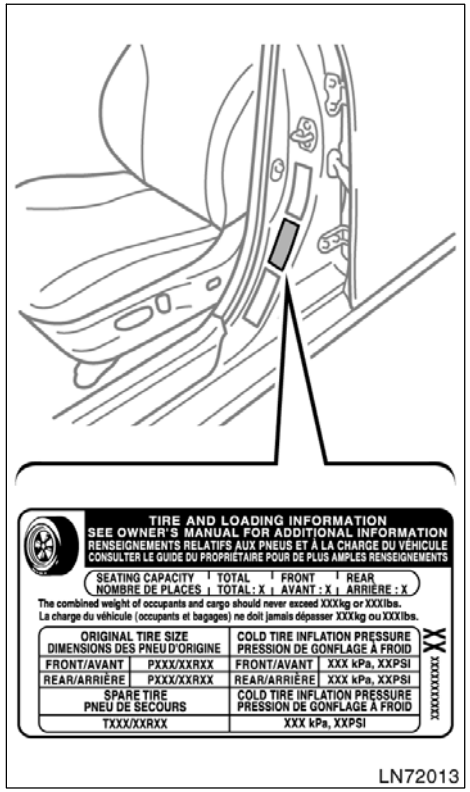

Type B

Keep your tire inflation pressures at the proper level.

The recommended cold tire inflation pressures, tire sizes and the combined weight of occupants and cargo (vehicle capacity weight) are described on page 406 and 411. They are also on the tire and loading information label.

You should check the tire inflation pressure every two weeks, or at least once a month. And do not forget the spare!

The following instructions for checking tire inflation pressure should be observed:

- **The pressure should be checked only when the tires are cold.** If your vehicle has been parked for at least 3 hours and has not been driven for more than 1.5 km or 1 mile since, you will get an accurate cold tire inflation pressure reading.
- **Always use a tire pressure gauge.** The appearance of a tire can be misleading. Besides, tire inflation pressures that are even just a few pounds off can degrade ride and handling.
- **Take special care when adding air to the compact spare tire.** The smaller tire size can gain pressure very quickly. Add compressed air in small quantities and check the pressure often until it reaches the specified pressure.
- **Do not bleed or reduce tire inflation pressure after driving.** It is normal for the tire inflation pressure to be higher after driving.
- **Never exceed the vehicle capacity weight.** Passenger and luggage weight should be located so that the vehicle is balanced.

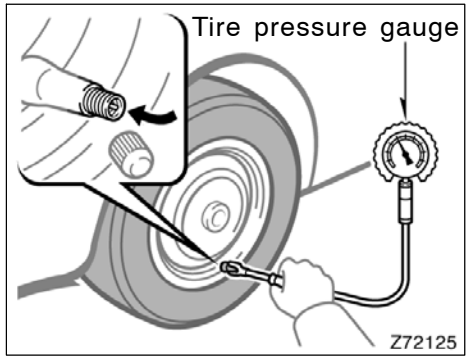

INSPECTION AND ADJUSTMENT PROCEDURE

1. Remove the tire valve cap.
2. Press the tip of the tire pressure gauge to the tire valve.
3. Read the pressure using the graduations of the gauge.
4. In case the tire inflation pressure is not within the prescribed range, insert the compressed air from the valve. In case of applying too much air, press the center of the valve and release the air to adjust.

5. After completing the tire inflation pressure measurement and adjustment, apply soapy water to the valve and check for leakage.
6. Install the tire valve cap.

If a gauge and air pump are not available, have your vehicle checked by your Toyota dealer.

⚠ CAUTION

Be sure to reinstall the tire valve caps. Without the valve caps, dirt or moisture could get into the valve core and cause air leakage. If the caps have been lost, have new ones put on as soon as possible.

Incorrect tire inflation pressure may waste fuel, reduce the comfort of driving, reduce tire life and make your vehicle less safe to drive.

If a tire frequently needs refilling, have it checked by your Toyota dealer.

⚠ CAUTION

Keep your tires properly inflated. Otherwise, the following conditions may occur and cause an accident resulting in death or serious injuries.

Low tire pressure (underinflation)—

- **Excessive wear**
- **Uneven wear**
- **Poor handling**
- **Possibility of blowouts from a overheated tire**
- **Poor sealing of the tire bead**
- **Wheel deformation and/or tire separation**
- **A greater possibility of tire damage from road hazards**

High tire pressure (overinflation)—

- **Poor handling**
- **Excessive wear**
- **Uneven wear**
- **A greater possibility of tire damage from road hazards**

Checking and replacing tires

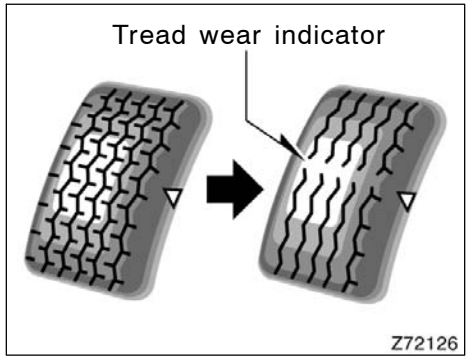

CHECKING YOUR TIRES

Check the tire’s tread for tread wear indicators. If the indicators show, replace the tires. The location of tread wear indicators is shown by the “TWI” or “∆” marks, etc., molded on the sidewall of each tire.

The tires on your Toyota have built–in tread wear indicators to help you know when the tires need replacement. When the tread depth wears to 1.6 mm (0.06 in.) or less, the indicators will appear. If you can see the indicators in two or more adjacent grooves, the tire should be replaced. The lower the tread, the higher the risk of skidding.

The effectiveness of snow tires is lost if the tread wears down below 4 mm (0.16 in.).

If you have tire damage such as cuts, splits, cracks deep enough to expose the fabric, or bulges indicating internal damage, the tire should be replaced.

If a tire often goes flat or cannot be properly repaired due to the size or location of a cut or other damage, it should be replaced. If you are not sure, consult with your Toyota dealer.

If air loss occurs while driving, do not continue driving. Driving even a short distance can damage a tire beyond repair.

Any tires which are over 6 years old must be checked by a qualified technician even if damage is not obvious.

Tires deteriorate with age even if they have never or seldom been used.

This applies also to the spare tire and tires stored for future use.

REPLACING YOUR TIRES

When replacing a tire, use a tire of the same size and construction, and the same or greater maximum load as the originally installed tires.

Using any other size or type of tire may seriously affect handling, ride, speedometer/odometer calibration, ground clearance, and clearance between the body and tires or snow chains.

Check that the maximum load of the replaced tire is greater than 1/2 of the Gross Axle Weight Ratings (GAWR) of either the front axle or the rear axle, whichever is greater. As for the maximum load of the tire, see the load limit at maximum cold tire inflation pressure mentioned on the sidewall of the tire, and as for the Gross Axle Weight Ratings (GAWR), see the Certification Label.

For details about the side wall of the tire and the Certification Label, see pages 297 and 300.

⚠ CAUTION

Observe the following instructions. Otherwise, an accident may occur resulting in death or serious injuries.

- **Do not mix radial, bias belted, or bias–ply tires on your vehicle, as this may cause dangerous handling characteristics resulting in loss of control.**
- **Do not use tires other than the manufacturer’s recommended size, as this may cause dangerous handling characteristics resulting in loss of control.**

Toyota recommends all four tires, or at least both of the front or rear tires be replaced at a time as a set.

See “If you have a flat tire” on page 343 in Section 4 for tire change procedure.

When a tire is replaced, the wheel should always be balanced.

An unbalanced wheel may affect vehicle handling and tire life. Wheels can get out of balance with regular use and should therefore be balanced occasionally.

When replacing a tubeless tire, the air valve should also be replaced with a new one.

Initial adjustment of the tire pressure warning system is necessary after you have replaced your tires. See “Tire pressure warning system” on page 174 in Section 1–7.

Rotating tires

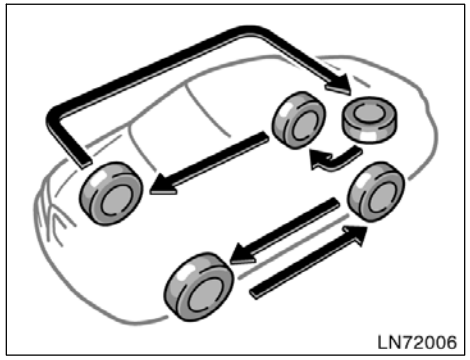

With a spare tire of the same wheel type as the installed tires

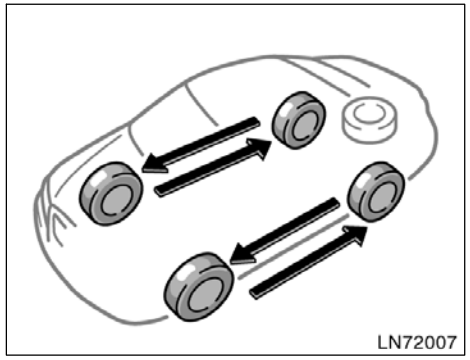

With a spare tire of different wheel type from the installed tires

To equalize the wear and help extend tire life, Toyota recommends that you rotate your tires according to the maintenance schedule. (For scheduled maintenance information, please refer to the “Scheduled Maintenance Guide” or “Owner’s Manual Supplement”.) However, the most appropriate timing for tire rotation may vary according to your driving habits and road surface conditions.

See “If you have a flat tire” on page 343 in Section 4 for tire change procedure.

When rotating tires, check for uneven wear and damage. Abnormal wear is usually caused by incorrect tire pressure, improper wheel alignment, out–of–balance wheels, or severe braking.

Initial adjustment of the tire pressure warning system is necessary after you have rotated your tires. See “Tire pressure warning system” on page 174 in Section 1–7.

CAUTION

Do not include a compact spare tire when rotating the tires. It is designed for temporary use only.

Installing snow tires and chains

WHEN TO USE SNOW TIRES OR CHAINS

Snow tires or chains are recommended when driving on snow or ice.

On wet or dry roads, conventional tires provide better traction than snow tires.

SNOW TIRE SELECTION

If you need snow tires, select tires of the same size, construction and load capacity as the originally installed tires.

Do not use tires other than those mentioned above. Do not install studded tires without first checking local regulations for possible restrictions.

CAUTION

Do not use snow tires other than the manufacturer’s recommended size, as this may cause dangerous handling characteristics resulting in loss of control. Otherwise, an accident may occur resulting in death or serious injuries.

SNOW TIRE INSTALLATION

Snow tires should be installed on all wheels.

Installing snow tires on the front wheels only can lead to an excessive difference in road grip capability between the front and rear tires which could cause loss of vehicle control.

When storing removed tires you should store them in a cool dry place. Mark the direction of rotation and be sure to install them in the same direction when replacing.

CAUTION

- **Do not drive with the snow tires incorrectly inflated.**
- **Never drive over 120 km/h (75 mph) with any type of snow tires.**

TIRE CHAIN SELECTION

Use the tire chains of correct size.

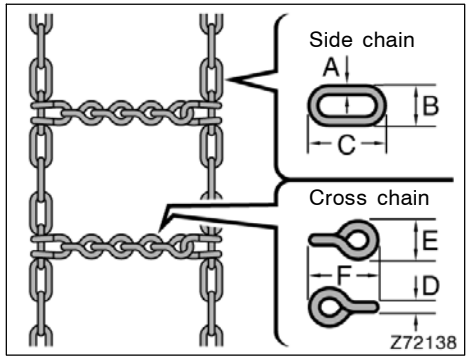

Use the following type chains.

		mm (in.)
A	Diameter of side chain	3 (0.12)
B	Width of side chain	10 (0.39)
C	Length of side chain	30 (1.18)
D	Diameter of cross chain	4 (0.16)
E	Width of cross chain	14 (0.55)
F	Length of cross chain	25 (0.98)

Regulations regarding the use of tire chains vary according to location or type of road, so always check local regulations before installing chains.

NOTICE

If the wrong combination of tire and chain is used, the chains could damage the vehicle body.

CHAIN INSTALLATION

Install the chains on the front tires as tightly as possible. Do not use tire chains on the rear tires. Retighten chains after driving 0.5—1.0 km (1/4—1/2 mile).

When installing chains on your tires, carefully follow the instructions of the chain manufacturer.

If wheel covers are used, they will be scratched by the chain band, so remove the covers before putting on the chains.

CAUTION

- **Do not exceed 50 km/h (30 mph) or the chain manufacturer’s recommended speed limit, whichever is lower.**
- **Drive carefully avoiding bumps, holes, and sharp turns, which may cause the vehicle to bounce.**
- **Avoid sharp turns or locked-wheel braking, as use of chains may adversely affect vehicle handling.**
- **When driving with chains installed, be sure to drive carefully. Slow down before entering curves to avoid losing control of the vehicle. Otherwise an accident may occur.**

NOTICE

Do not attempt to use a tire chain on the compact spare tire, as it may result in damage to the vehicle as well as the tire.

Replacing wheels

WHEN TO REPLACE YOUR WHEELS

If you have wheel damage such as bending, cracks or heavy corrosion, the wheel should be replaced.

If you fail to replace a damaged wheel, the tire may slip off the wheel or cause loss of handling control.

WHEEL SELECTION

When replacing wheels, care should be taken to ensure that the wheels are replaced by ones with the same load capacity, diameter, rim width, and offset.

Correct replacement wheels are available at your Toyota dealer.

A wheel of a different size or type may adversely affect handling, wheel and bearing life, brake cooling, speedometer/odometer calibration, stopping ability, headlight aim, bumper height, vehicle ground clearance, and tire or snow chain clearance to the body and chassis.

Replacement with used wheels is not recommended as they may have been subjected to rough treatment or high mileage and could fail without warning. Also, bent wheels which have been straightened may have structural damage and therefore should not be used. Never use an inner tube in a leaking wheel which is designed for a tubeless tire.

⚠ CAUTION

Do not use wheels other than the manufacturer’s recommended size, as this may cause dangerous handling characteristics resulting in loss of control. Otherwise, an accident may occur resulting in death or serious injuries.

Initial adjustment of the tire pressure warning system is necessary after you have replaced your wheels. See “Tire pressure warning system” on page 174 in Section 1–7.

Aluminum wheel precautions

- When installing aluminum wheels, check that the wheel nuts are tight after driving your vehicle the first 1600 km (1000 miles).
- If you have rotated, repaired, or changed your tires, check that the wheel nuts are still tight after driving 1600 km (1000 miles).
- When using tire chains, be careful not to damage the aluminum wheels.
- Use only Toyota wheel nuts and wrench designed for your aluminum wheels.
- When balancing your wheels, use only Toyota balance weights or equivalent and a plastic or rubber hammer.
- As with any wheel, periodically check your aluminum wheels for damage. If damaged, replace immediately.

SECTION 7–3

DO–IT–YOURSELF MAINTENANCE

Electrical components

Checking battery condition 396
Battery recharging precautions 397
Checking and replacing fuses 398
Adding washer fluid 399
Replacing light bulbs 400

Checking battery condition——Precautions

⚠ CAUTION

BATTERY PRECAUTIONS

The battery produces flammable and explosive hydrogen gas.

- **Do not cause a spark from the battery with tools.**
- **Do not smoke or light a match near the battery.**

The electrolyte contains poisonous and corrosive sulfuric acid.

- **Avoid contact with eyes, skin or clothes.**
- **Never ingest electrolyte.**
- **Wear protective safety glasses when working near the battery.**
- **Keep children away from the battery.**

EMERGENCY MEASURES

- **If electrolyte gets in your eyes, flush your eyes with clean water immediately and get immediate medical attention. If possible, continue to apply water with a sponge or cloth while en route to the medical office.**
- **If electrolyte gets on your skin, thoroughly wash the contact area. If you feel pain or burning, get medical attention immediately.**
- **If electrolyte gets on your clothes, there is a possibility of its soaking through to your skin, so immediately take off the exposed clothing and follow the procedure above, if necessary.**
- **If you accidentally swallow electrolyte, drink a large quantity of water or milk. Follow with milk of magnesia, beaten raw egg or vegetable oil. Then go immediately for emergency help.**

—Checking battery exterior

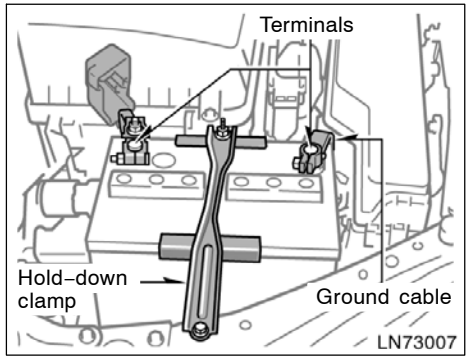

Check the battery for corroded or loose terminal connections, cracks, or loose hold–down clamp.

a. If the battery is corroded, wash it off with a solution of warm water and baking soda. Coat the outside of the terminals with grease to prevent further corrosion.

b. If the terminal connections are loose, tighten their clamp nuts—but do not overtighten.

c. Tighten the hold–down clamp only enough to keep the battery firmly in place. Overtightening may damage the battery case.

NOTICE

- ***Be sure the engine and all accessories are off before performing maintenance.***
- ***When checking the battery, remove the ground cable from the negative terminal (“–” mark) first and reinstall it last.***
- ***Be careful not to cause a short circuit with tools.***
- ***Take care no solution gets into the battery when washing it.***

—Checking battery condition

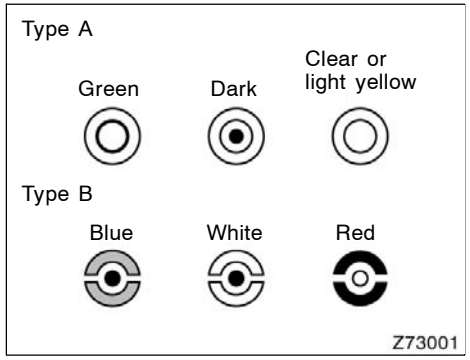

CHECKING BY INDICATOR

Check the battery condition by the indicator color.

Indicator color		Condition
Type A	Type B	
Green	Blue	Good
Dark	White	Charging necessary. Have battery checked by your Toyota dealer.
Clear or light yellow	Red	Have battery checked by your Toyota dealer.

Battery recharging precautions

During recharging, the battery is producing hydrogen gas.

Therefore, before recharging:

1. If recharging with the battery installed on the vehicle, be sure to disconnect the ground cable.
2. Be sure the power switch on the recharger is off when connecting the charger cables to the battery and when disconnecting them.

⚠ CAUTION

- **Always charge the battery in an unconfined area. Do not charge the battery in a garage or closed room where there is not sufficient ventilation.**
- **Only do a slow charge (5 A or less). Charging at a quicker rate is dangerous. The battery may explode, causing personal injuries.**

NOTICE

Never recharge the battery while the engine is running. Also, be sure all accessories are turned off.

Checking and replacing fuses

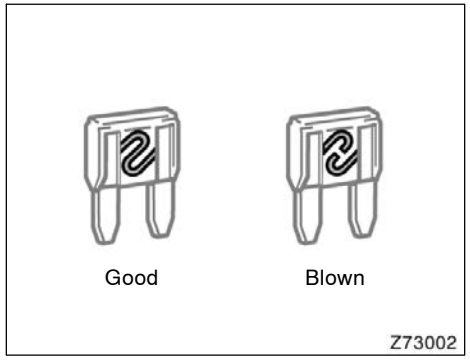

Type A

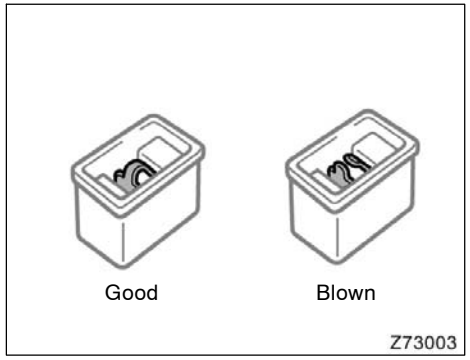

Type C

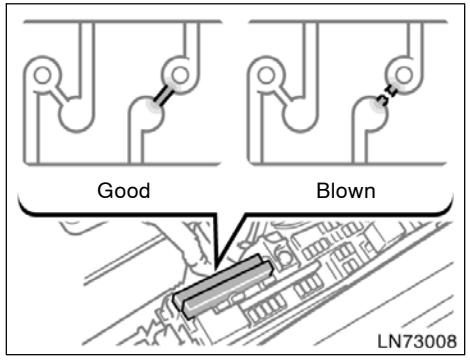

Type B

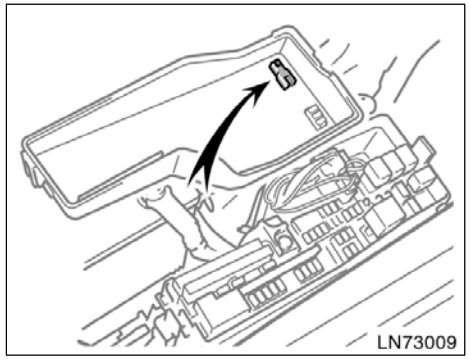

If the headlights or other electrical components do not work, check the fuses. If any of the fuses are blown, they must be replaced.

See “Fuse locations” on page 374 in Section 7–1 for locations of the fuses.

Turn the ignition switch and inoperative component off. Pull the suspected fuse straight out and check it.

Determine which fuse may be causing the problem. The lid of the fuse box shows the name of the circuit for each fuse. See page 412 in Section 8 for the functions controlled by each circuit.

Type B fuses—When any of the fuses are blown, contact your Toyota dealer.

Type A fuses can be pulled out by the pull–out tool. The location of the pull–out tool is shown in the illustration.

If you are not sure whether the fuse has blown, try replacing the suspected fuse with one that you know is good.

If the fuse has blown, push a new fuse into the clip.

Only install a fuse with the amperage rating designated on the fuse box lid.

If you do not have a spare fuse, in an emergency you can pull out the “MIR HTR” or “PWR OUTLET” fuse, which may be dispensable for normal driving, and use it if its amperage rating is the same.

If you cannot use one of the same amperage, use one that is lower, but as close to the rating as possible. If the amperage is lower than that specified, the fuse might blow out again but this does not indicate anything wrong. Be sure to get the correct fuse as soon as possible and return the substitute to its original clip.

It is a good idea to purchase a set of spare fuses and keep them in your vehicle for emergencies.

If the new fuse immediately blows out, there is a problem with the electrical system. Have your Toyota dealer correct it as soon as possible.

CAUTION

Never use a fuse with a higher amperage rating, or any other object, in place of a fuse. This may cause extensive damage and possibly a fire.

Adding washer fluid

If any washer does not work or the low windshield washer fluid level warning light comes on, the washer tank may be empty. Add washer fluid.

You may use plain water as washer fluid. However, in cold areas where temperatures range below the freezing point, use washer fluid containing antifreeze. This product is available at your Toyota dealer and most auto parts stores. Follow the manufacturer’s directions for how much to mix with water.

NOTICE

Do not use engine antifreeze or any other substitute because it may damage your vehicle’s paint.

Replacing light bulbs—

The following illustrations show how to gain access to the bulbs. When replacing a bulb, make sure the ignition switch and light switch are off. Use bulbs with the wattage ratings given in the table.

The high mounted stoplight consists of a number of LEDs. If any of the LEDs burn out, take your vehicle to your Toyota dealer to have the light replaced.

⚠ CAUTION

- **To prevent burning yourself, do not replace the light bulbs while they are hot.**
- **Halogen bulbs have pressurized gas inside and require special handling. They can burst or shatter if scratched or dropped. Hold a bulb only by its plastic or metal case. Do not touch the glass part of a bulb with bare hands.**

NOTICE

Only use a bulb of the listed type.

The inside of the lens of exterior lights such as headlights may temporarily fog up when the lens becomes wet in the rain or in a car wash. This is not a problem because the fogging is caused by the temperature difference between the outside and inside of the lens, just like the windshield fogs up in the rain. However, if there is a large drop of water on the inside of the lens, or if there is water pooled inside the light, contact your Toyota dealer.

Light bulbs	Bulb No.	W	Type
Headlights (high)	9005	60	A
Headlights (low)	—	55	B
Front side marker lights	—	5	C
Front turn signal/parking lights	3457NAK	30/8	D
Rear turn signal lights	—	21	D
Stop/tail and rear side marker lights	7443	21/5	C
Tail lights (type A)	—	5	C
Tail lights (type B)	194	3.8	C
License plate lights	—	5	C
Back–up lights	921	16	C
Front fog lights	—	55	B
Front personal lights	—	5	C

Light bulbs	Bulb No.	W	Type
Rear personal lights	—	8	C
Interior light	—	8	E
Door courtesy lights	168	5	C
Vanity lights	—	8	C
Glove box light	—	1.2	C
Trunk light	—	3.8	C

A: HB3 halogen bulbs
B: H11 halogen bulbs
C: Wedge base bulbs (clear)
D: Wedge base bulbs (amber)
E: Double end bulbs

—Front fog, front turn signal/parking, front side marker, tail and back–up lights, and LED* type high mounted stoplight

If either the left or right front fog, front turn signal/parking, front side marker, tail or back–up lights, or LED* type high mounted stoplight burns out, contact your Toyota dealer.

NOTICE

Do not try to replace the front fog, front turn signal/parking, front side marker, tail or back–up light bulbs by yourself. You may damage the vehicle.

*: Light–emitting Diode

—Headlights

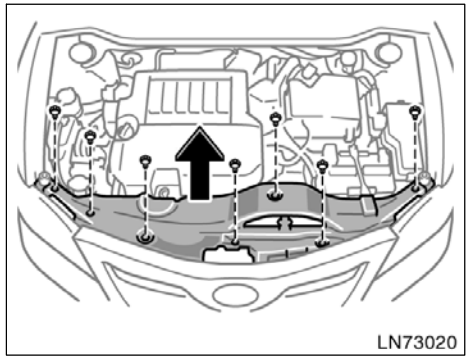

3.5 L V6 (2GR–FE) engine only—

Before replacing the headlight bulbs, remove the cover clips and take off the cover.

Remove and install the cover clip as shown in the following illustrations.

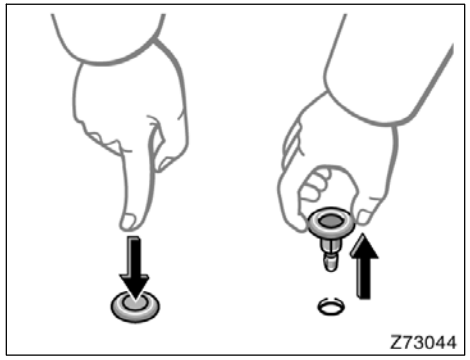

Removing clip

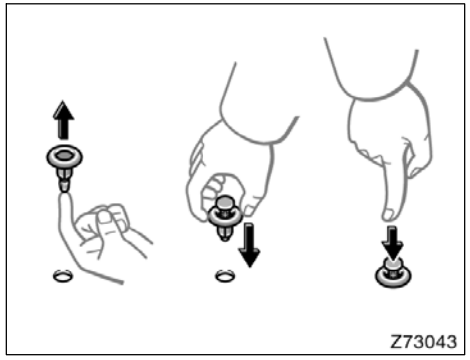

Installing clip

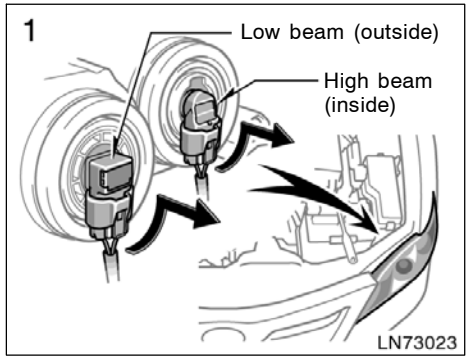

1. **Open the hood. Turn the bulb base counterclockwise to the front of the vehicle as shown.**

The above illustration shows the left–hand headlight.

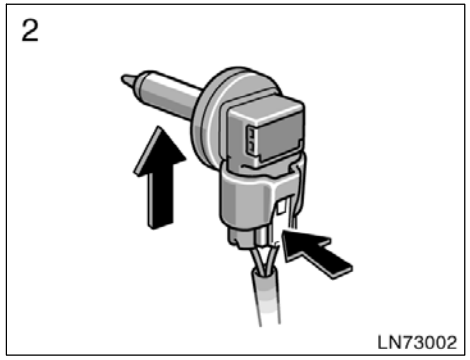

2. **Unplug the connector while depressing the lock release.**

If the connector is tight, wiggle it.

—Rear turn signal, stop/tail and rear side marker lights

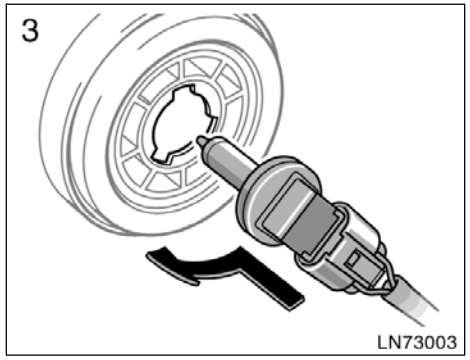

3. Plug in a new bulb into the connector and install it into the mounting hole.

Aiming is not necessary after replacing the bulb. When aiming adjustment is necessary, contact your Toyota dealer.

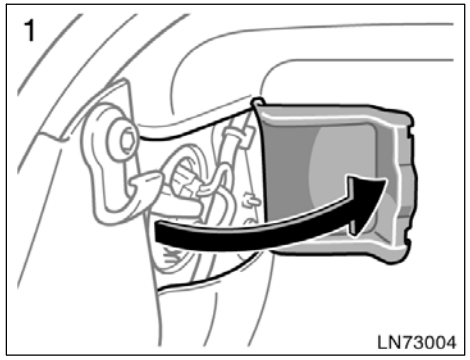

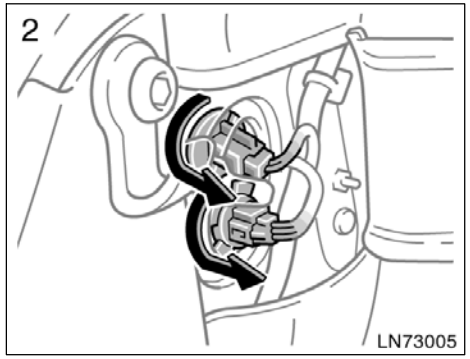

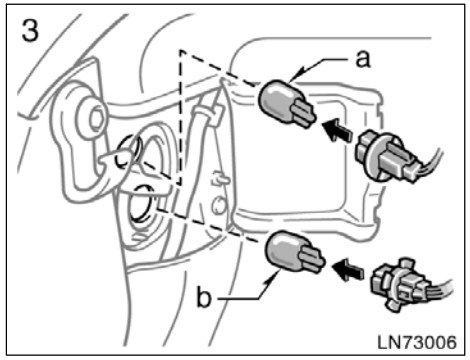

a: Rear turn signal light
b: Stop/tail and rear side marker light

SECTION 8

SPECIFICATIONS

Specifications

Dimensions and weights 406
Engine 406
Fuel 407
Service specifications 407
Tires 411
Fuses 412

Dimensions and weights

Overall length	mm (in.)	4805 (189.2)
Overall width	mm (in.)	1820 (71.7)
Overall height*1	mm (in.)	1465 (57.7)*2 1470 (57.9)*3
Wheelbase	mm (in.)	2775 (109.3)
Front tread	mm (in.)	1575 (62.0)
Rear tread	mm (in.)	1565 (61.6)
Vehicle capacity weight (occupants + luggage)	kg (lb.)	410 (900)
Towing capacity (trailer weight + cargo weight)	kg (lb.)	453 (1000)

*1: Unladen vehicle
*2: With P215/55R17 tires
*3: With P215/60R16 tires

Engine

Model:
2AZ–FE and 2GR–FE

Type:
2AZ–FE engine
4 cylinder in line, 4 cycle, gasoline
2GR–FE engine
6 cylinder V type, 4 cycle, gasoline

Bore and stroke, mm (in.):
2AZ–FE engine
88.5 × 96.0 (3.48 × 3.78)
2GR–FE engine
94.0 × 83.0 (3.70 × 3.27)

Displacement, cm^3 (cu. in.):
2AZ–FE engine 2362 (144.1)
2GR–FE engine 3456 (210.9)

Fuel

Fuel type:
Unleaded gasoline, Octane Rating 87 (Research Octane Number 91) or higher

Fuel tank capacity, L (gal., Imp. gal.):
70 (18.5, 15.4)

Service specifications

ENGINE

Valve clearance (engine cold), mm (in.):

2.4 L 4–cylinder (2AZ–FE) engine

Intake	0.19—0.29 (0.007—0.011)
Exhaust	0.38—0.48 (0.015—0.019)

Spark plug type:

2.4 L 4–cylinder (2AZ–FE) engine

DENSO	SK20R11
NGK	IFR6A11

3.5 L V6 (2GR–FE) engine

DENSO	FK20HR11

Spark plug gap, mm(in.):
1.1 (0.043)

NOTICE

3.5 L V6 (2GR–FE) engine—Use only above spark plugs. Do not adjust gaps for engine performance or smooth driveability.

ENGINE LUBRICATION

Oil capacity (drain and refill), L (qt., Imp. qt.):

2.4 L 4–cylinder (2AZ–FE) engine

With filter	4.3 (4.5, 3.8)
Without filter	4.1 (4.3, 3.6)

3.5 L V6 (2GR–FE) engine

With filter	6.1 (6.4, 5.4)
Without filter	5.7 (6.0, 5.0)

“Toyota Genuine Motor Oil” is used in your Toyota vehicle. Use Toyota approved “Toyota Genuine Motor Oil” or equivalent to satisfy the following grade and viscosity.

Oil grade:
ILSAC multigrade engine oil

Recommended oil viscosity:

2.4 L 4–cylinder (2AZ–FE) engine
SAE 5W–20 or 0W–20

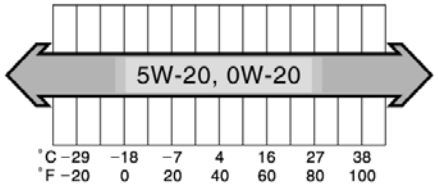

3.5 L V6 (2GR–FE) engine
SAE 5W–30

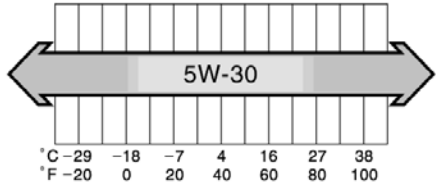

Please contact your Toyota dealer for further details.

COOLING SYSTEM

Total capacity, L (qt., Imp. qt.):

2.4 L 4–cylinder (2AZ–FE) engine
6.2 (6.6, 5.5)

3.5 L V6 (2GR–FE) engine
9.0 (9.5, 7.9)

Coolant type:

“Toyota Super Long Life Coolant” is used in your Toyota vehicle at factory fill. In order to avoid technical problems, only use “Toyota Super Long Life Coolant” or similar high quality ethylene glycol based non–silicate, non–amine, non–nitrite, and non–borate coolant with long–life hybrid organic acid technology. (Coolant with long–life hybrid organic acid technology is a combination of low phosphates and organic acids.)

Do not use plain water alone.

Please contact your Toyota dealer for further details.

BATTERY

Open voltage* at 20°C (68°F):

12.6—12.8 V	Fully charged
12.2—12.4 V	Half charged
11.8—12.0 V	Discharged

*: Voltage that is checked 20 minutes after the key is removed with all the lights turned off

Charging rates:
5 A max.

Note: If replacement is necessary, make sure to do so with a battery that meets the same standard as the original.

CLUTCH

Pedal free play, mm (in.):
5—15 (0.2—0.6)

Fluid type:
SAE J1703 or FMVSS No.116 DOT 3

MANUAL TRANSAXLE

Oil capacity, L (qt., Imp. qt.):
2.5 (2.6, 2.2)

Oil type:
Gear oil API GL–4 or GL–5

Recommended oil viscosity:
SAE 75W–90

AUTOMATIC TRANSAXLE

Fluid capacity (drain and refill), L (qt., Imp. qt.):

2.4 L 4–cylinder (2AZ–FE) engine
3.5 (3.7, 3.1)

3.5 L V6 (2GR–FE) engine
6.57 (6.94, 5.78)*

*: The fluid capacity is the quantity of reference. If replacement is necessary, contact your Toyota dealer.

Fluid type:
Toyota Genuine ATF WS

Change automatic transmission fluid only as necessary.

Generally, it is necessary to change automatic transmission fluid only if your vehicle is driven under one of the Special Operating Conditions listed in your “Scheduled Maintenance Guide” or “Owner’s Manual Supplement”. When changing the automatic transmission fluid, use only “Toyota Genuine ATF WS” (ATF JWS3324 or NWS9638) to aid in assuring optimum transaxle performance.

Notice: Using automatic transmission fluid other than “Toyota Genuine ATF WS” may cause deterioration in shift quality, locking up of your transmission accompanied by vibration, and ultimately damage the automatic transmission of your vehicle.

Please contact your Toyota dealer for further details.

BRAKES

Minimum pedal clearance when depressed with the force of 500 N (51 kgf, 112 lbf) with the engine running, mm (in.):
Manual transmission models
63 (2.5)
Automatic transmission models
61 (2.4)

Pedal free play, mm (in.):
1—6 (0.04—0.24)

Pad wear limit, mm (in.):
1.0 (0.04)

Parking brake

Lever type—
Parking brake adjustment when pulled with the force of 200 N (20 kgf, 44 lbf):
7—9 clicks

Pedal type—
Parking brake adjustment when depressed with the force of 300 N (31 kgf, 67 lbf):
7—10 clicks

Fluid type:
SAE J1703 or FMVSS No.116 DOT 3

STEERING

Wheel free play:
Less than 30 mm (1.2 in.)

Power steering fluid type:
Automatic transmission fluid DEXRON®II or III

Tires

Tire size and cold tire inflation pressure:

Front and rear

kPa (kgf/cm^2 or bar, psi)

Tire size	Front	Rear	Wheel size
P215/60R16 94V	210 (2.1, 30)	210 (2.1, 30)	16 × 6 1/2 J 16 × 6 1/2 JJ
P215/55R17 93V	220 (2.2, 32)	220 (2.2, 32)	17 × 7 J

When driving under the above vehicle conditions at sustained high speeds above 160 km/h (100 mph), in countries where such speeds are permitted by–law, inflate the front and rear tires to 240 kPa (2.4 kgf/cm^2 or bar, 35 psi) provided that it does not exceed the maximum cold tire inflation pressure molded on the tire sidewall.

Spare

kPa (kgf/cm^2 or bar, psi)

Tire size	Front	Rear	Wheel size
P215/60R16 94V	210 (2.1, 30)	210 (2.1, 30)	16 × 6 1/2 J 16 × 6 1/2 JJ
P215/55R17 93V	220 (2.2, 32)	220 (2.2, 32)	17 × 7 J
T155/70D17 110M	420 (4.2, 60)	420 (4.2, 60)	17 × 4T

Wheel nut torque, N·m (kgf·m, ft·lbf):
103 (10.5, 76)

NOTE: For a complete information on tires (e.g. replacing tires or replacing wheels), see “Checking tire inflation pressure” through “Aluminum wheel precautions”, pages 385 through 393, in Section 7–2.

Fuses

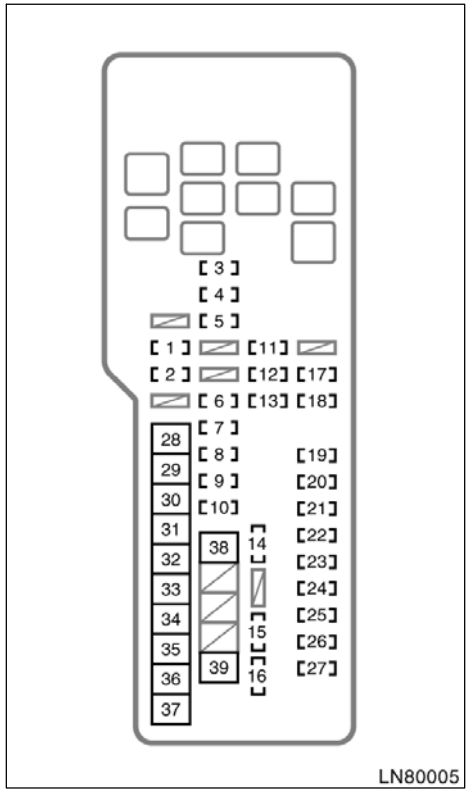

ENGINE COMPARTMENT

1. **RR FOG 10 A:** No circuit
2. **FR DEF 15 A (2.4 L 4–cylinder [2AZ–FE] engine):** No circuit
3. **AM2 7.5 A:** Starting system
4. **ALT–S 7.5 A:** Charging system
5. **MAYDAY/TEL 7.5 A:** No circuit
6. **E–ACM 10 A (3.5 L V6 [2GR–FE] engine):** No circuit
7. **ETCS 10 A:** Electronic throttle control system
8. **HAZ 15 A:** Turn signal lights
9. **IG2 20 A:** Multiport fuel injection system/sequential multiport fuel injection system, starting system, “GAUGE NO.2” and “IGN” fuses
10. **STR LOCK 20 A:** Steering lock system
11. **DOME 10 A:** Gages and meters, vanity lights, trunk light, ignition switch light, door courtesy lights, interior light, personal lights, clock, smart key system
12. **ECU–B NO.1 10 A:** Wireless remote control system, front passenger occupant classification system, main body ECU, vehicle stability control system
13. **RADIO NO.1 15 A:** Audio system, navigation system
14. **DOOR NO.1 25 A:** Main body ECU
15. **AMP 25 A:** Audio system
16. **EFI MAIN 30 A:** Multiport fuel injection system/sequential multiport fuel injection system, electronic throttle control system, “EFI NO.2” and “EFI NO.3” fuses
17. **EFI NO.3 10 A:** Multiport fuel injection system/sequential multiport fuel injection system
18. **EFI NO.2 15 A:** Multiport fuel injection system/sequential multiport fuel injection system
19. **S–HORN 7.5 A:** Horn
20. **A/F 20 A:** Multiport fuel injection system/sequential multiport fuel injection system
21. **MPX–B 10 A:** Gages and meters
22. **EFI NO.1 10 A:** Theft deterrent system, smart key system, multiport fuel injection system/sequential multiport fuel injection system, electronic throttle control system
23. **HORN 10 A:** Horns
24. **H–LP(RL) 15 A:** Right–hand headlight (low beam)
25. **H–LP(LL) 15 A:** Left–hand headlight (low beam)

26. **H–LP(RH) 15 A:** Right–hand headlight (high beam)
27. **H–LP(LH) 15 A:** Left–hand headlight (high beam)
28. **HTR 50 A:** Air conditioning system
29. **ABS NO.1 50 A:** Anti–lock brake system, vehicle stability control system, traction control system, brake assist system
30. **FAN MAIN 50 A (3.5 L V6 [2GR–FE] engine):** Electric cooling fans
31. **ABS NO.2 30 A:** Anti–lock brake system, vehicle stability control system, traction control system, brake assist system
32. **RR DEF 50 A:** Rear window defogger, “MIR HTR” fuse
33. **RR PWR SEAT 30 A:** No circuit
34. **H–LP CLN 30 A:** No circuit
35. **CDS FAN 40 A (2.4 L 4–cylinder [2AZ–FE] engine):** Electric cooling fans
36. **RDI FAN 40 A (2.4 L 4–cylinder [2AZ–FE] engine):** Electric cooling fans
37. **MSB 30 A:** No circuit
38. **ALT 120 A:** “RR FOG”, “FR DEF”, “AM2”, “ALT–S”, “MAYDAY/TEL”, “E–ACM”, “ETCS”, “HAZ”, “IG2”, “STR LOCK”, “DOME”, “ECU–B NO.1”, “RADIO NO.1”, “EFI MAIN”, “AMP”, “DOOR NO.1”, “EFI NO.3”, “EFI NO.2”, “S–HORN”, “A/F”, “MPX–B”, “EFI NO.1”, “HORN”, “H–LP(RL)”, “H–LP(LL)”, “H–LP(RH)”, “H–LP(LH)”, “HTR”, “ABS NO.1”, “FAN MAIN”, “ABS NO.2”, “RR DEF”, “RR PWR SEAT”, “H–LP CLN”, “CDS FAN”, “RDI FAN”, “MSB”, “ALT” and “ST/AM2” fuses
39. **ST/AM2 30 A:** Starting system

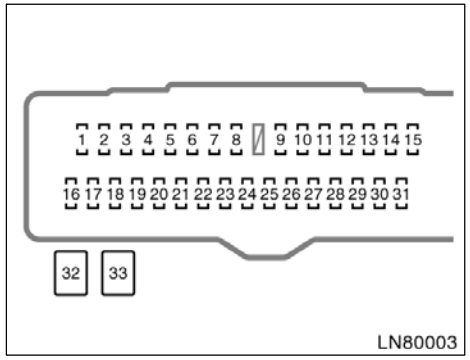

INSTRUMENT PANEL

1. **RR DOOR RH 25 A:** Rear right power window
2. **RR DOOR LH 25 A:** Rear left power window
3. **FUEL OPN 7.5 A:** No circuit
4. **FR FOG 15 A:** Front fog lights
5. **OBD 7.5 A:** On–board diagnosis system
6. **ECU–B NO.2 7.5 A:** No circuit

7. **STOP 10 A:** Stop lights, high mounted stoplight, shift lock control system, multiport fuel injection system/sequential multiport fuel injection system, main body ECU, anti–lock brake system, vehicle stability control system, traction control system, brake assist system, electronic throttle control system
8. **TI&TE 30 A:** No circuit
9. **AM1 7.5 A:** Starting system, multiport fuel injection system/sequential multiport fuel injection system
10. **A/C 7.5 A:** Air conditioning system
11. **PWR 25 A:** Power windows
12. **DOOR NO.2 25 A:** Main body ECU
13. **S/ROOF 30 A:** Electric moon roof
14. **TAIL 15 A:** Front side marker lights, tail lights, rear side marker lights, license plate lights, front turn signal/parking lights
15. **PANEL 7.5 A:** Navigation system, seat heaters, emergency flashers, air conditioning system, audio system, clock, glove box light, instrument panel lights, steering switches
16. **ECU IG NO.1 10 A:** Main body ECU, electric moon roof, tire pressure warning system, electric cooling fans, auto anti–glare inside rear view mirror
17. **ECU IG NO.2 7.5 A:** Anti–lock brake system, vehicle stability control system, traction control system, brake assist system, shift lock control system, automatic transmission, cruise control system
18. **A/C NO.2 10 A:** Air conditioning system, rear window defogger
19. **WASH 10 A:** Windshield wipers and washer
20. **S–HTR 20 A:** Seat heaters
21. **GAUGE NO.1 10 A:** Emergency flashers, back–up lights, charging system
22. **WIP 25 A:** Windshield wipers and washer
23. **H–LP LVL 7.5 A:** No circuit
24. **INJ 15 A:** Multiport fuel injection system/sequential multiport fuel injection system, starting system
25. **IGN 10 A:** Multiport fuel injection system/sequential multiport fuel injection system, theft deterrent system, SRS airbag system, steering lock system, front passenger occupant classification system, smart key system, electronic throttle control system
26. **GAUGE NO.2 7.5 A:** Gages and meters, multi–information display, clock
27. **ECU–ACC 7.5 A:** Clock, main body ECU, shift lock control system, outside rear view mirror, smart key system
28. **CIG 20 A:** Power outlet
29. **PWR OUTLET 20 A:** Power outlet
30. **RADIO NO.2 7.5 A:** Audio system, navigation system
31. **MIR HTR 10 A:** Outside rear view mirror defoggers
32. **POWER 30 A:** Power windows
33. **P/SEAT 30 A:** Power seats

SECTION 9

REPORTING SAFETY DEFECTS FOR U.S. OWNERS

Reporting safety defects for U.S. owners

Reporting safety defects for U.S. owners 416

Reporting safety defects for U.S. owners

If you believe that your vehicle has a defect which could cause a crash or could cause injury or death, you should immediately inform the National Highway Traffic Safety Administration (NHTSA) in addition to notifying Toyota Motor Sales, U.S.A., Inc. (Toll–free: 1–800–331–4331).

If NHTSA receives similar complaints, it may open an investigation, and if it finds that a safety defect exists in a group of vehicles, it may order a recall and remedy campaign. However, NHTSA cannot become involved in individual problems between you, your dealer, or Toyota Motor Sales, U.S.A., Inc.

To contact NHTSA, you may call the Vehicle Safety Hotline toll–free at 1–888–327–4236 (TTY: 1–800–424–9153); go to *http://www.safercar.gov*; or write to: Administrator, NHTSA, 400 Seventh Street, SW., Washington, DC 20590. You can also obtain other information about motor vehicle safety from *http://www.safercar.gov*.

QU¿8

Quick index

- If a service reminder indicator or warning buzzer comes on 146
- If your vehicle will not start 336
- If your engine stalls while driving 341
- If your vehicle overheats 342
- If you have a flat tire 343
- If your vehicle needs to be towed 353
- Tips for driving during break–in period 286
- How to start the engine 316
- General maintenance 367
- Complete index ..... NO TAG

Gas station information

Fuel type:
UNLEADED gasoline, Octane Rating 87 (Research Octane Number 91) or higher.

See page 286 for detailed information.

Fuel tank capacity:
70 L (18.5 gal., 15.4 Imp. gal.)

Engine oil:
ILSAC multigrade engine oil is recommended.

See page 381 for detailed information.

Tire information: See pages 385 through 393.

Tire inflation pressure: See page 411.

Publication No. OM33748U
Part No. 01999-33748
Printed in Japan 01–0611–00 I
¿¿¿ (¿¿U)

You should know as much about the quality and importance of proper maintenance of your new vehicle as the people who built it.

The Toyota authorized Repair Manual tells you how to maintain your vehicle and enables you to correctly perform your own maintenance.

The best way to keep your new vehicle in top running order is to maintain it properly from the moment you drive it off the showroom floor.

The Toyota authorized Repair Manual is packed with literally everything you need to know to perform your own maintenance in virtually every area of your new vehicle.

Maintenance procedures for the engine, chassis, body, electrical system, and more, are clearly explained and illustrated.

Periodic maintenance and tune–up

Periodic maintenance and tune–up helps to prevent small problems from growing into larger ones later on. The repair manual outlines exactly what maintenance is required and clearly explains how to do the work yourself step–by–step.

Areas covered include such things as spark plug replacement, valve clearance adjustment and engine oil and filter replacement.

Where to obtain the Repair Manual

The repair manual for CAMRY may be purchased from any Toyota dealer or the Material Distribution Center. To purchase the repair manual, please contact your Toyota dealer or call the Material Distribution Center toll–free at 1–800–622–2033.