Foreword

Welcome to the growing group of value–conscious people who drive Toyotas. We are proud of the advanced engineering and quality construction of each vehicle we build.

This Owner's Manual explains the operation of your new Toyota. Please read it thoroughly and have all the occupants follow the instructions carefully. Doing so will help you enjoy many years of safe and trouble–free motoring. For important information about this manual and your Toyota, read the following pages carefully.

When it comes to service, remember that your Toyota dealer knows your vehicle best and is interested in your complete satisfaction. He will provide quality maintenance and any other assistance you may require.

If there is not a Toyota dealer near you, or you need emergency assistance for any reason, please call the following number:

• **U.S. OWNERS:**	Toyota Customer Assistance Center	**Toll–free:1–800–331–4331**
• **CANADIAN OWNERS:**	Toyota Canada Customer Interaction Centre	**Toll–free:1–888–TOYOTA–8 (1–888–869–6828)**

Please leave this Owner's Manual in this vehicle at the time of resale. The next owner will need this information also.

All information and specifications in this manual are current at the time of printing. However, because of Toyota's policy of continual product improvement, we reserve the right to make changes at any time without notice.

Please note that this manual applies to all models and explains all equipment, including options. Therefore, you may find some explanations for equipment not installed on your vehicle.

TOYOTA MOTOR CORPORATION

© 2001 TOYOTA MOTOR CORPORATION

All rights reserved. This material may not be reproduced or copied, in whole or in part, without the written permission of Toyota Motor Corporation.

Important information about this manual

Safety and vehicle damage warnings

Throughout this manual, you will see safety and vehicle damage warnings. You must follow these warnings carefully to avoid possible injury or damage.

The types of warnings, what they look like, and how they are used in this manual are explained as follows:

⚠ CAUTION

This is a warning against something which may cause injury to people if the warning is ignored. You are informed about what you must or must not do in order to avoid or reduce the risk to yourself and other people.

NOTICE

This is a warning against something which may cause damage to the vehicle or its equipment if the warning is ignored. You are informed about what you must or must not do in order to avoid or reduce the risk of damage to your Prius and its equipment.

Safety symbol

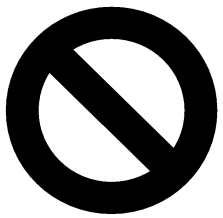

00060

When you see the safety symbol shown above, it means: “Do not...”; “Do not do this”; or “Do not let this happen”.

Important information about your Toyota

New vehicle warranty

Your new vehicle is covered by the following Toyota limited warranties:

- New vehicle warranty
- Emission control systems warranty
- Others

For further information, please refer to the “Owner’s Warranty Information Booklet” or “Owner’s Manual Supplement”.

Your responsibility for maintenance

It is the owner’s responsibility to make sure the specified maintenance is performed. Section 7 gives details of these maintenance requirements. Also included in Section 7 is general maintenance. For scheduled maintenance information, please refer to the “Scheduled Maintenance Guide” or “Owner’s Manual Supplement”.

Accessories, spare parts and modification of your Toyota

A wide variety of non–genuine spare parts and accessories for Toyota vehicles are currently available in the market. Using these spare parts and accessories which are not genuine Toyota products may adversely affect the safety of your vehicle, even though these parts may be approved by certain authorities in your country. Toyota therefore cannot accept any liability or guarantee spare parts and accessories which are not genuine Toyota products, nor for replacement or installation involving such parts.

This vehicle should not be modified with non–genuine Toyota products. Modification with non–genuine Toyota products could affect its performance, safety or durability, and may even violate governmental regulations. In addition, damage or performance problems resulting from the modification may not be covered under warranty.

Spark ignition system of your Toyota

The spark ignition system in your Toyota meets all requirements of the Canadian Interference–Causing Equipment Standard.

Installation of a mobile two–way radio system

As the installation of a mobile two–way radio system in your vehicle could affect electronic systems such as multiport fuel injection system / sequential multiport fuel injection system, cruise control system, anti–lock brake system, SRS airbag system, seat belt pretensioner system and Toyota hybrid system, be sure to check with your Toyota dealer for precautionary measures or special instructions regarding installation.

Scrapping of your Toyota

The SRS airbag and seat belt pretensioner devices in your Toyota contain explosive chemicals. If the vehicle is scrapped with the airbags and pretensioners left as they are, this may cause an accident such as fire. Be sure to have the systems of the SRS airbag and seat belt pretensioner removed and disposed of by the qualified service shop or by your Toyota dealer before you dispose of your vehicle.

⚠ CAUTION

When your vehicle or battery needs to be disposed of, be sure to consult your Toyota dealer. Hybrid vehicle batteries must be collected through Toyota dealers. If your vehicle is disposed of without dismantling, someone could receive an electric shock by touching the high voltage parts of the hybrid vehicle battery. If the battery is not disposed of properly, its contents can cause death or serious injury.

Hybrid vehicle battery

Hybrid vehicle battery has a limited service life. Call your Toyota dealer for information concerning recycling or disposal of hybrid vehicle battery and your vehicle.

⚠ CAUTION

Precautions for use of hybrid vehicle

The vehicle has both high voltage DC and AC systems as well as a 12–volt system. DC and AC high voltage are both very dangerous and can cause death or serious injury, severe burns and electric shock.

- **In order to avoid personal injuries, do not touch the high voltage cables (orange colored) and their connectors.**
- **Follow the caution labels attached to the high voltage parts.**
- **Do not remove or replace the high voltage parts such as the inverter unit (located in the engine compartment), hybrid vehicle battery (located between rear seat and trunk), etc.**
- **Do not touch the service plug located in the left side trim of the trunk without hybrid system technical training. (See "Precautions for use" on page 12 in Section 1–2.) This component is provided to disable the high voltage system in case of servicing at a Toyota dealer.**

⚠ CAUTION

If an accident occurs

- **Pull your Toyota off the road, put the selector lever in "P" and remove the ignition key.**
- **In order to avoid personal injuries, do not touch any high voltage wirings and their connectors, and high voltage parts (inverter unit, hybrid vehicle battery, etc.).**
- **If some exposed electric wirings are protruding inside or outside of your Toyota, an electric shock may occur. Never touch the electric wirings.**
- **If fluid leaks or gets in some parts of the vehicle, never touch it because it may be electrolyte (strong alkali) from the hybrid vehicle battery. If it gets into your skin or eyes, wash off immediately with a large amount of water, if possible, boric acid solution, and get immediate medical attention in order to help avoid serious injury.**
- **If a vehicle fire occurs, extinguish it using a fire extinguisher for the exclusive use on electric fires. Or, use a large amount of water to prevent flammable gas from being generated from the batteries.**

- **When your Toyota needs to be towed, do it with the front wheels raised. For details on towing, see "If your vehicle needs to be towed" on page 180 in Section 5.**

⚠ CAUTION

High Voltage

Your vehicle is equipped with cables connected to parts of the vehicle subject to high voltage (about 300 V). There are some other parts which reach high temperatures when you are driving. Never touch battery cables (wrapped in orange–colored harnesses) and their connector since high voltages are applied and they are dangerous. Caution labels are applied to these parts to identify them. Carefully observe the instructions on these caution labels.

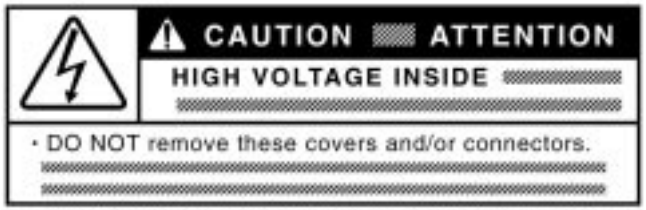

Quick index

- If a service reminder indicator or warning buzzer comes on 91
- If your vehicle will not start 168
- If your vehicle overheats 172
- If you have a flat tire 173
- If your vehicle needs to be towed 180
- Tips for driving during break-in period 146
- How to start the hybrid system 162
- General maintenance 195
- Complete index ..... NO TAG

Gas station information

Fuel type:

UNLEADED gasoline, Octane Rating 87 (Research Octane Number 91) or higher.

See page 146 for detailed information.

Fuel tank capacity:

45 L (11.9 gal., 9.9 Imp. gal.)
See page 146 for detailed information.

Engine oil:

API grade SJ, ”Energy–Conserving” or ILSAC multigrade engine oil is recommended.

See page 209 for detailed information.

Automatic transmission fluid:

Automatic transmission fluid Type T–IV or equivalent

Tire information: See pages 214 through 219.

Tire pressure: See page 237.

SECTION 1– 1

FEATURES ON NEW TOYOTA VEHICLE

Overview of instruments and controls

Instrument panel overviewww 2
Instrument cluster and multi–information display overview 4
Indicator symbols on the instrument panel and multi–information display 5

Instrument panel overview

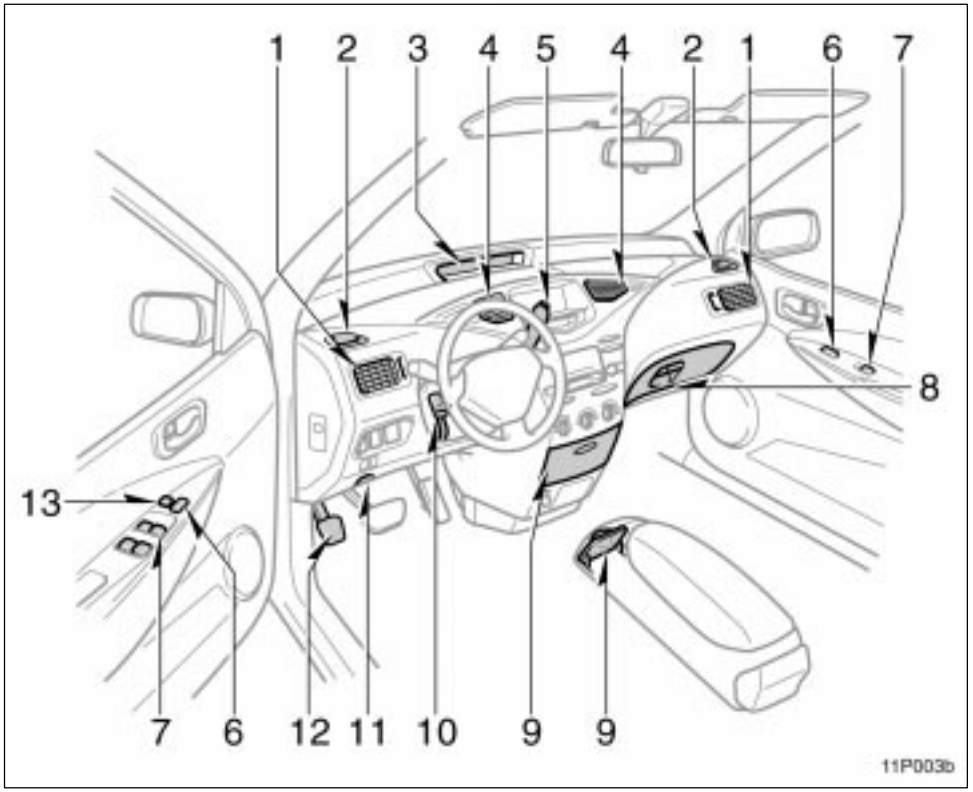

1. Side vents
2. Side defroster outlets
3. Instrument cluster
4. Center vents
5. Running mode selector lever
6. Power door lock switches
7. Power window switches
8. Glove box
9. Auxiliary boxes
10. Tilt steering lock release lever
11. Hood lock release lever
12. Parking brake pedal
13. Window lock switch

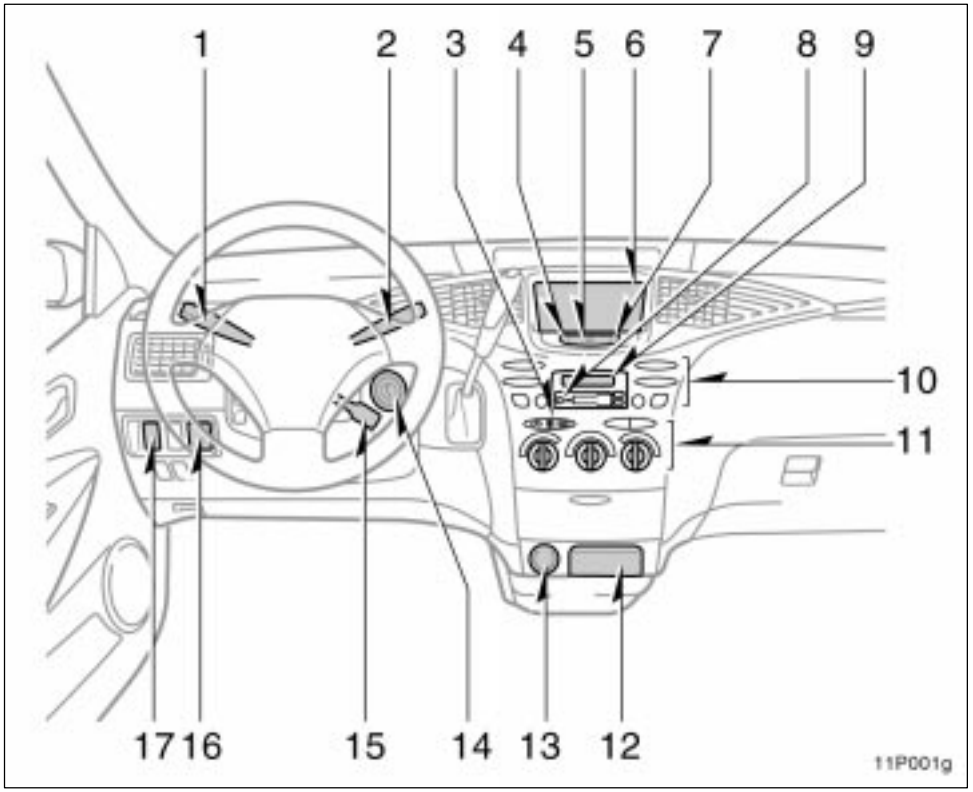

1. Headlight and turn signal switch
2. Wiper and washer switch
3. Rear window defogger switch
4. Trip meter reset button
5. Emergency flasher switch
6. Multi–information display
7. Switching km/h MPH button
8. Security indicator light
9. Clock
10. Car audio
11. Air conditioning controls
12. Auxiliary box
13. Power outlet
14. Ignition switch
15. Cruise control switch
16. Power rear view mirror control switch
17. Instrument panel light control dial

Instrument cluster and multi–information display overview

1. Service reminder indicators and indicator lights
2. Speedometer
3. Fuel gauge
4. Odometer and trip meter
5. Outside temperature display

Indicator symbols on the instrument panel and Multi–information display

BRAKE or	Brake system warning light*1
	Seat belt reminder light*1
PASSENGER	Front passenger's seat belt reminder light*1
	Discharge warning light*1
E	Low fuel level indicator light*1
	Low coolant temperature indicator light (in blue)*1 High coolant temperature warning light (in red)*1
CHECK	Malfunction indicator lamp*1

	Low engine oil pressure warning light*1
	Master warning light*1
ABS or ABS	Anti–lock brake system warning light*1
	Open door warning light*1
	SRS warning light*1
	Turn signal indicator lights
	Headlight high beam indicator light
	Headlight indicator light

	Tail light indicator light
CRUISE	Cruise control indicator light*3
P R N D B	Running mode position indicator light
READY	Driving ready light
	Output control warning light*1
MAIN	Hybrid vehicle battery warning light*2
P S	Power steering warning light*2
	Hybrid system warning light*2

*1: For details, see ”Service reminder indicators and warning buzzers— —Instrument cluster” on page 91 in Section 2–4.

*2: For details, see “Service reminder indicators and warning buzzers— —Multi–information display” on page 97 in Section 2–4.

*3: If this light flashes, see ”Cruise control” on page 107 in Section 2–5.

SECTION 1– 2

FEATURES ON NEW TOYOTA VEHICLE

Toyota hybrid system

Toyota hybrid system 8
Toyota hybrid system operating conditionn 8
Starting your vehicle 11
For efficient use of your vehicle 11
Precautions for use 12

Toyota hybrid system

Toyota hybrid system combines the gasoline engine and the electric motor power to improve the fuel economy largely and minimize the emissions as well as to provide higher power performance than the ordinary gasoline–powered vehicles.

Depending on the driving condition, the vehicle runs on the best combination of;

- **Gasoline engine power**
- **Electric motor power generated by the gasoline engine**
- **Electric motor power of the hybrid vehicle battery**

Furthermore, the energy is effectively used in the following ways:

- When stopping the vehicle, the gasoline engine is automatically stopped.
- When decreasing the speed by applying the brakes, electricity converted from the turning force of the wheels is stored in the hybrid vehicle battery. (This is called regenerative brake.)

Since the battery is charged by the gasoline engine as needed, it does not require charging from the outside like an electric vehicle.

In this way, greatly improved fuel economy and reduced emissions are attained.

If you do not use the vehicle for a long time, the hybrid vehicle battery will discharge and the battery condition is liable to decline.

Toyota hybrid system operating condition

Basic operations are described below. Besides, Toyota hybrid system performs various controls depending on the operating condition, such as at the time of hybrid system starting, at the time of charging should be required, at the time of the air conditioning is in use, etc.

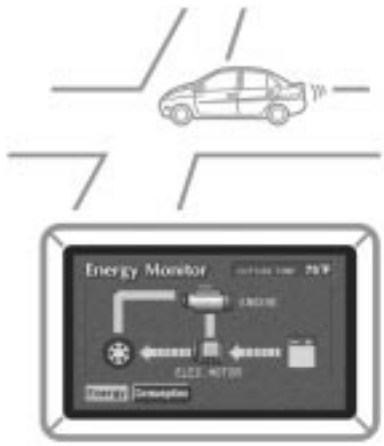

Electric power
in use

12P016a

When starting or backing up, etc., the gasoline engine efficiency worsens, so the vehicle runs on electric power from hybrid vehicle battery.

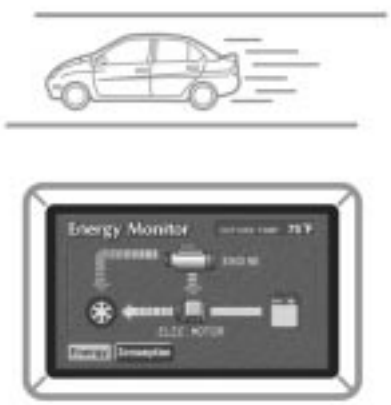

Gasoline power
in use

12P017a

During normal driving, the vehicle runs mainly on gasoline power. However, the electric motor, using electric power generated by the gasoline engine, makes up for any deficiency of gasoline power.

The vehicle controls the optimum ratio of the gasoline and electric power to help save energy more effectively.

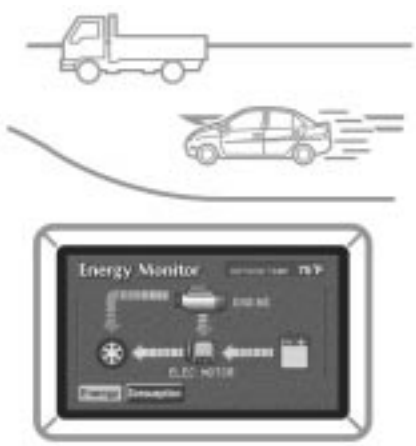

Electric and gasoline
power in use

12P018a

When driving at full throttle, electric power is further applied from the hybrid vehicle battery. Vehicle performance improves.

Storing electric power

12P019a

When decreasing speed or applying the brakes, the turning force of the wheels makes the electric motor operate as a generator and additional electricity is stored in the hybrid vehicle battery (regenerative brake).

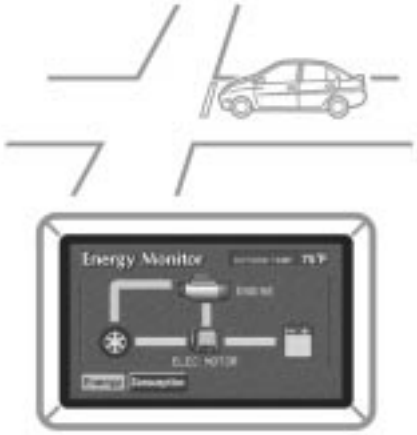

Not in use

12P020a

When stopping, the gasoline engine automatically shuts off.

12P030

Charging hybrid vehicle battery

When the hybrid vehicle battery power is insufficient, the gasoline engine charges the hybrid vehicle battery. The system always supplies electricity at a constant level.

Starting your vehicle

Turn the ignition key from “ON” to “START” with the running mode selector lever in “P” position only. When the “READY” light flashes and stays on and a beep sounds after a few seconds, the hybrid system starts. (If the ambient temperature is low such as during winter conditions, it may take time until the “READY” light is on.) Being different from ordinary vehicles, you cannot start your vehicle with the running mode selector lever in “N” position. (For details, see “How to start the hybrid system—” on page 162 in Section 4.)

For efficient use of your vehicle

Drive your vehicle with a smooth acceleration and deceleration.

- When driving, energy is effectively recovered through the regenerative brake as the vehicle decelerates. However, for more efficient use, do not accelerate or decelerate your vehicle more than necessary.
- By avoiding abrupt acceleration and deceleration, the remaining capacity of the hybrid vehicle battery can be preserved and it makes it possible to run the vehicle utilizing the gasoline engine and the electric power from the hybrid vehicle battery.
- The remaining capacity of the hybrid vehicle battery can be confirmed on the energy monitor screen of the multi–information display. See “Information” on 113 page in Section 2–6 for details. As the way in which you drive may decrease the remaining capacity of the hybrid vehicle battery and reduce fuel economy, drive your vehicle without abrupt acceleration or deceleration.

Use the “A/C” mode (with the “A/C” button only on) when you use the air conditioning.

- As the gasoline engine starts and stops automatically in this mode, economical driving with less emissions is possible.
- In the “MAX” mode (with the “A/C” button and “MAX” button on), the gasoline engine is frequently used. Use this mode only when you need to operate the air conditioning fully such as when you should dehumidify or when you are under a burning sun.

When parking, be sure to put the running mode selector lever in “P” position. While driving, use “D” position.

- With the selector lever in “N” position, the gasoline engine operates but electricity cannot be generated. The constant electrical power remaining in the hybrid vehicle battery becomes insufficient and the battery will be discharged.

- The hybrid system automatically controls the level of electrical power remaining in the hybrid vehicle battery. With the selector lever in a position other than “N”, electricity is generated and charging occurs when the level of electrical power in the hybrid vehicle battery decreases. It is unnecessary to charge the hybrid vehicle battery from outside.

INFORMATION:

The gasoline engine starts and stops automatically. (It stops during a low load driving, deceleration or when the vehicle stopped.)

If the “READY” light remains on, you can start your vehicle using the electric motor even with the gasoline engine stopped.

The gasoline engine may not stop automatically in the following conditions:

- ***During under gasoline engine warm–up***
- ***During hybrid vehicle battery charging***
- ***When the air conditioning is used in the “MAX” mode, the gasoline engine is frequently used.***

If the output control warning light ( ) comes on in the instrument cluster, the hybrid vehicle battery temperature is low or high, or the hybrid vehicle battery capacity is decreased with the selector lever at “R” during driving. As it does not indicate the failure of the system, you can continue driving but avoid hard acceleration because the power is insufficient (which is caused by the battery power deterioration).

Precautions for use

The vehicle runs in combination with the gasoline and electric power. Pay special attention to the following items.

Be careful of a high voltage and high temperature.

Your vehicle is equipped with the orange colored cables connected to the hybrid vehicle battery which contain a high voltage (about 300 V) and to other high voltage parts.

⚠ CAUTION

Do not touch or come in contact with orange cables or battery terminals. Electric shock may cause serious injury or death. Read all caution labels.

A electric motor, coolant radiator and some other parts reach high temperature when you are driving. Caution labels are applied to these parts. Carefully observe the instructions on these caution labels.

⚠ CAUTION

Never remove or disassemble the high voltage parts, high voltage cables (orange color) and their connectors. It may cause death or serious injury.

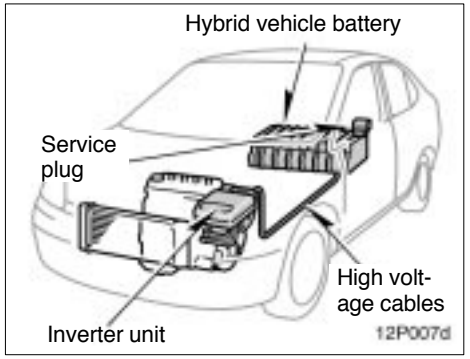

Do not touch the service plug.

The service plug is installed in the left side trim of the trunk. It is provided to shut out high voltage current of the hybrid vehicle battery when the vehicle is in need of repairs at a Toyota dealer.

⚠ CAUTION

- **The shaded parts in the illustration are subjected to a high voltage.**
- **Inappropriate handling may cause an electric shock resulting in serious injury or death. Never touch any item in shaded area.**

Keep your hybrid vehicle's driving characteristics in mind.

- As the vehicle runs with both the gasoline engine and electric motor, you may hear a motor sound coming from the engine compartment.
- When the ignition switch is turned to on or off, you may hear a sound coming from the hybrid vehicle battery in the trunk. However, this does not indicate any trouble.
- If the "READY" light is on, you can start even with the gasoline engine stopped.
- When the hybrid vehicle battery temperature is low or high, or the hybrid vehicle battery capacity is decreased with the selector lever at "R" during driving, the output control warning light comes on and the output might be limited for longer battery charge life.
- If the output control warning light is on, drive your vehicle without hard acceleration. The output power will be limited particularly when backing up.

- When you put the running mode selector lever in “B” position and release your foot from the accelerator pedal, engine braking will be applied. However, during the high speed driving you may feel that deceleration by engine braking is less than that of ordinary vehicle.

Drive your vehicle without hard acceleration if the output control warning light ( ) is on.

The hybrid vehicle battery temperature is low or high, or the hybrid vehicle battery capacity is decreased with the selector lever at “R” during driving. If this occurs, the output control warning light comes on. If the output control warning light is on, the hybrid system output is limited. Drive your vehicle without hard acceleration.

Vehicle performance might be reduced significantly especially when backing up.

Be sure to put the running mode selector lever in “P” position when parking.

With the selector lever in “N” position, the hybrid vehicle battery assembly is not charged, even if the gasoline engine is operating. You cannot run your vehicle if the selector lever is left in “N” position for a long time because the hybrid vehicle battery assembly will be discharged.

When you leave your vehicle, apply the parking brake with the running mode selector lever in “P” position and be sure to remove the key and lock all the doors.

When you leave the the ignition key in the “ACC” or “ON” position if the hybrid system is not operating, the hybrid system may not start because the auxiliary battery will be discharged.

⚠ CAUTION

- **When you leave your vehicle, be sure to shut off the hybrid system.**
- **Be sure to put the running mode selector lever in “P” position because the vehicle can start with the “READY” light on and the engine stopped (no engine sound and vibration). When the “READY” light is on, if you leave your vehicle with the running mode selector lever in a position other than “P” and “N”, the vehicle will creep and start abruptly with the accelerator pedal being depressed by mistake. It may cause death or serious injury.**

If the multi–information display shows a message, the master warning light (⚠) comes on in the instrument cluster. Read the message and follow the instruction.

- When you leave your vehicle, or stop or park for a while, put the selector lever in “P”.
- Charging is necessary. With the selector lever in “N” position, charging will not be applied. The electric generator operates in “P”, “D” or “B” position. If you continue driving, put the selector lever in “D” or “B” position and depress the accelerator pedal. Do not leave it in “N” position. When driving in traffic jam, run in “D” position.

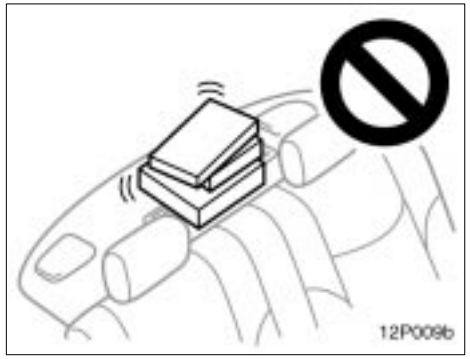

Do not put the luggage on the package tray behind the rear seatback.

- An air vent is provided on the package tray behind the rear seatback to cool the hybrid vehicle battery. If this vent is covered with something, the hybrid vehicle battery will overheat resulting in a reduction of the output performance of the hybrid system.
- Do not apply water or put foreign objects over the air vent. Otherwise, it may affect the hybrid vehicle battery adversely and cause damage.
- You may hear a cooling fan noise from the air vent.

For vehicle repairs or maintenance, be sure to consult your Toyota dealer.

If your vehicle is beyond repair because of accident or something, be sure to consult your Toyota dealer.

As sealed Nickel–Metal hydride batteries are used, be sure to consult your Toyota dealer when disposing of your vehicle.

⚠ CAUTION

If you are involved in an accident, follow these precautions.

- **Move the vehicle to a safe place and perform the followings to reduce the risk of high voltage electricity leakage.**
  - **Depress the brake pedal and put the selector lever in "P" position.**
  - **Apply the parking brake.**
  - **Turn the ignition switch to "LOCK" and remove the key.**

- **If your vehicle has experienced major damage, you may get an electric shock. To prevent this, never touch the high voltage parts (hybrid vehicle battery assembly, etc.) or cables (orange color) connecting these parts. If some exposed electric wiring is protruding inside or outside of the vehicle, an electric shock may also occur. Never touch them.**
- **If the fluid leaks or gets in some part of the vehicle, never touch it because it may be electrolyte (strong alkali) from the hybrid vehicle battery. If it gets on your skin or eyes, wash off immediately with a large amount of water, if possible, with boric acid solution, and get immediate medical attention in order to help avoid serious injury.**
- **If a vehicle fire occurs, extinguish it using a fire extinguisher for the exclusive use on electric fires. As a small amount of water may be dangerous, use a large amount of water, for example from a fire hydrant, or wait for a fire–fighting team arrival.**

- **When your vehicle needs to be towed, do it with the front wheels or all four wheels raised. If the front wheels are on the ground when towing, the electric motor may continue to generate electricity which could cause leakage of electricity and a fire depending on the degree of damage. See "If your vehicle needs to be towed" on page 180 in Section 5.**

SECTION 2– 1

OPERATION OF INSTRUMENTS AND CONTROLS

Keys and Doors

Keys 18
Hybrid vehicle immobiliser system 20
Side doors 22
Power windows 28
Trunk lid 31
Hood 32
Theft deterrent system 34
Fuel tank cap 35

Keys

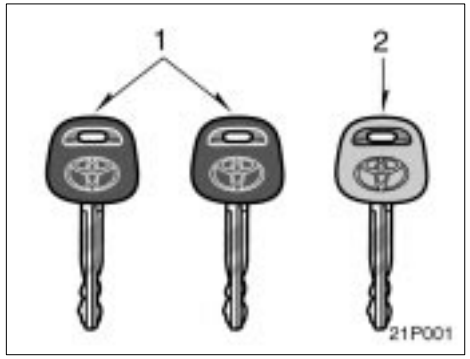

Your vehicle is supplied with two kinds of keys.

1. Master key (black)—This key works in every lock. Your Toyota dealer will need it to make you a new key with built–in transponder chip.
2. Sub key (gray)—This key will not work in the trunk.

A transponder chip for the hybrid vehicle immobiliser system has been filled in the head of the master and sub keys. These chips are required for the system to function correctly, so be careful not to lose these keys. If you make your own duplicate key, you will not be able to cancel the system or start the hybrid system.

To protect items locked in the trunk when someone else parks your vehicle for you (such as an attendant or valet), leave the sub key with them.

Since the doors and trunk can be locked without a key, you should always carry a spare master key in case you accidentally lock your keys inside the vehicle.

NOTICE

When using a key containing a transponder chip, observe the following precautions:

- ***When starting the hybrid system, do not use the key with a key ring resting on the key grip and do not press the key ring against the key grip. Doing so may prevent the hybrid system from starting.***

◆ *When starting the hybrid system, do not use the key in proximity with other transponder keys (including keys of other vehicles) and do not press other key plates against the key grip. Doing so may prevent the hybrid system from starting or, may cause the hybrid system to stop soon after it starts. If this happens, remove the key once and then insert it again after taking off other transponder keys (including keys of other vehicles) from the ring or while gripping or covering them with your hand to start the hybrid system.*

◆ *Do not bend the key grip.*

◆ *Do not cover the key grip with any material that cuts off electromagnetic waves.*

◆ *Do not knock the key hard against other objects.*

◆ *Do not leave the key exposed to high temperatures for a long period, such as on the dashboard or hood under direct sunlight.*

◆ *Do not put the key in water or wash it in an ultrasonic washer.*

◆ *Do not use the key with electromagnetic materials.*

Hybrid vehicle immobiliser system

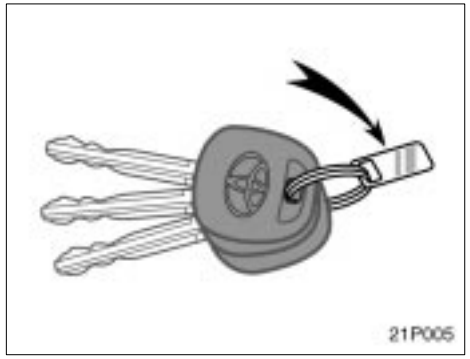

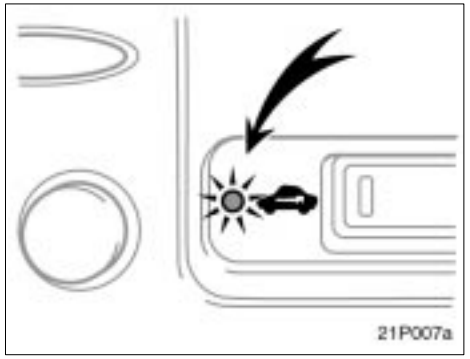

KEY NUMBER PLATE

Your key number is shown on the plate. Keep the plate in a safe place such as your wallet, not in the vehicle.

If you should lose your keys or if you need additional keys, duplicates can be made by a Toyota dealer using the key number.

We recommend that you write down the key number and keep it in a safe place.

The hybrid vehicle immobiliser system is a theft prevention system. When you insert the key in the ignition switch, the transponder chip in the key's head transmits an electronic code to the vehicle. The hybrid system will start, only when the electronic code in the chip corresponds to the registered ID code for the vehicle.

The system is automatically set when the key is removed from the ignition switch. The indicator light will start flashing to show the system is set.

If either of the following indicator conditions occurs, contact your Toyota dealer.

- The indicator light stays on except when the theft deterrent system is setting or activating. (See "Theft deterrent system" on page 34 in this section.)
- The indicator light does not start flashing when the key is removed from the ignition switch.
- The indicator light flashes unsteady.

Inserting the registered key in the ignition switch automatically cancels the system, which enables the hybrid system to start. The indicator light will go off.

For your Toyota dealer to make you a new key with built–in transponder chip, your dealer will need your key number and master key. However, there is a limit to the number of additional keys your Toyota dealer can make for you.

If you make your own duplicate key, you will not be able to cancel the system or start the hybrid system.

NOTICE

Do not modify, remove or disassemble the hybrid vehicle immobiliser system. If any unauthorized changes or modifications are made, the proper operation of the system cannot be guaranteed.

For vehicles sold in U.S.A.

FCC ID: MOZ RI–9BTY–1
MADE IN JAPAN

This device complies with Part 15 of the FCC Rules. Operation is subject to the following two conditions:

(1) This device may not cause harmful interference, and (2) this device must accept any interference received, including interference that may cause undesired operation.

CAUTION

Changes or modifications not expressly approved by the party responsible for compliance could void the user's authority to operate the equipment.

For vehicles sold in Canada

This device complies with RSS–210 of industry Canada. Operation is subject to the following two conditions:

(1) This device may not cause interference, and (2) this device must accept any interference, including interference that may cause undesired operation of the device.

Side doors—

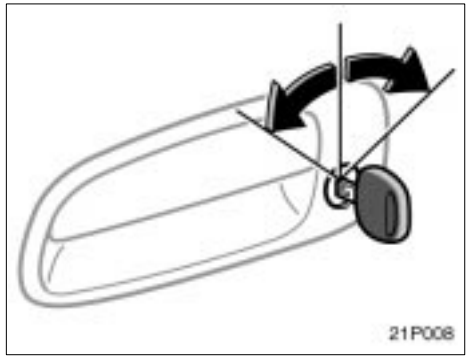

LOCKING AND UNLOCKING WITH KEY

Insert the key into the keyhole and turn it.

To lock: Turn the key forward.
To unlock: Turn the key backward.

All the doors lock and unlock simultaneously with either front door. In the driver's door lock, turning the key once will unlock the driver's door and twice in succession will unlock all the doors simultaneously.

The driver's window can be opened and closed from outside the vehicle using a key. For details, see "Power windows" on page 28 in this section.

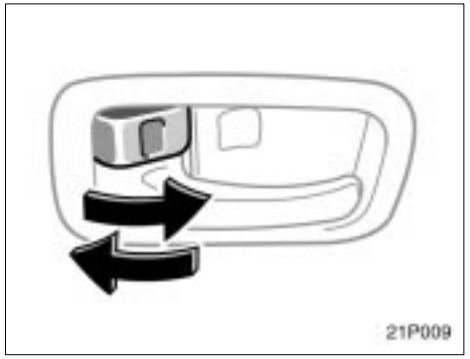

LOCKING AND UNLOCKING WITH INSIDE LOCK KNOB

Move the lock knob.

To lock: Push the knob forward.
To unlock: Pull the knob backward.

The driver's door can be opened by pulling the inside door handle even if the lock knob is depressed.

Closing the door with the lock knob in the lock position will also lock the door. Be careful not to lock your keys in the vehicle.

The door cannot be locked if you leave the key in the ignition switch.

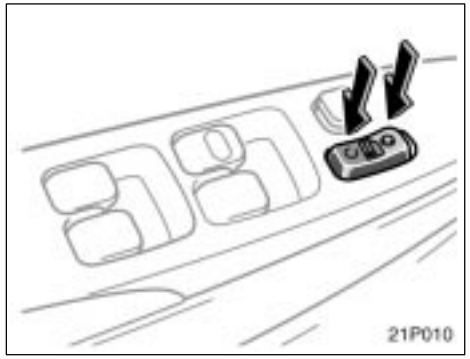

Driver's side

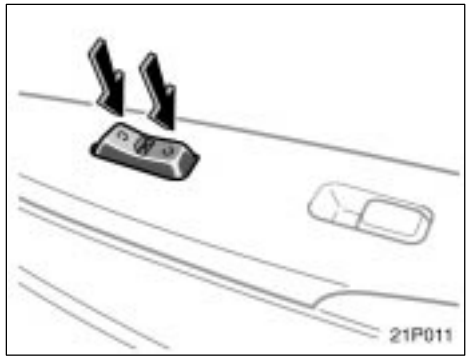

Passenger's side

LOCKING AND UNLOCKING WITH POWER DOOR LOCK SWITCH

Push the switch.

To lock: Push the switch on the front side. To unlock: Push the switch on the rear side.

All the doors lock or unlock simultaneously.

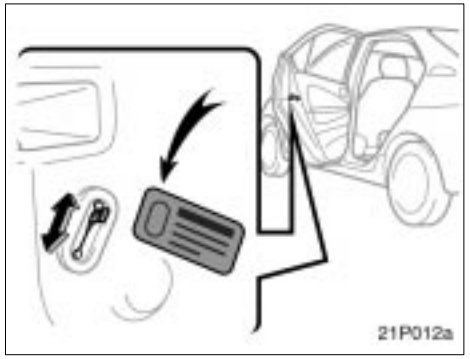

REAR DOOR CHILD–PROTECTORS

Move the lock lever to the "LOCK" position as shown on the label.

This feature allows you to lock a rear door so it can be opened from the outside only, not from inside. We recommend using this feature whenever small children are in the vehicle.

⚠ CAUTION

Before driving, be sure that the doors are closed and locked, especially when small children are in the vehicle. Along with the proper use of seat belts, locking the doors helps prevent the driver and passengers from being thrown out from the vehicle during an accident. It also helps prevent the doors from being opened unintentionally.

—Wireless remote control

Locking operation

Unlocking operation

The wireless remote control system is designed to lock or unlock both doors, or activate the theft deterrent system from a distance within approximately 1 m (3 ft.) of the vehicle.

LOCKING AND UNLOCKING THE DOORS

To lock and unlock all the doors, push the switches of the transmitter slowly and securely.

To lock: Push the “LOCK” switch. All the doors are locked simultaneously. At this time the parking lights, side marker lights, license plate lights and tail lights will flash once.

Check to see that the doors are securely locked.

If either door is not securely closed, locking cannot be performed by the “LOCK” switch.

To unlock: Push the “UNLOCK” switch once to unlock the only driver’s door. Pushing the switch twice within 3 seconds unlocks all the doors simultaneously. Each time the “UNLOCK” switch is pushed, the parking lights, side marker lights, license plate lights and tail lights will flash twice.

When the “UNLOCK” switch is pressed the interior light comes on. The lights remains on for about 15 seconds unless either door is opened then and closed. (For further information, see “Interior lights” on page 84 in Section 2–3.)

You have 30 seconds to open a door after using the wireless remote unlock feature. If a door is not opened by then, all the doors will be automatically locked again.

If the “LOCK” or “UNLOCK” switch is kept pressed in, the locking or unlocking operation is not repeated. Release the button and then push again.

“PANIC” SWITCH

Pushing the “PANIC” switch blows the horn intermittently and flashes the headlights and tail lights.

The “PANIC” switch is used to deter vehicle theft when you witness anyone attempting to break into or damage your vehicle.

The alarm will have for one minute. To stop alarm midway, push the “PANIC” or “UNLOCK” switch once again, unlock any door with the key or transmitter, or turn the ignition key from the “LOCK” to “ON” position.

The “PANIC” mode does not work when the ignition key is in the “ON” position.

WIRELESS REMOTE CONTROL TRANSMITTER

The wireless remote control transmitter is an electronic component. Observe the following instructions in order not to cause damage to the transmitter.

- Do not leave the transmitter on places where the temperature becomes high such as on the dashboard.
- Do not disassemble it.
- Avoid knocking it hard against other objects or dropping it.
- Avoid putting it in water.

You can use up to 4 wireless remote control transmitters for the same vehicle. Contact your Toyota dealer for detailed information.

If the wireless remote control transmitter does not actuate the doors or alarm, or operate from a normal distance.

- Check for closeness to a radio transmitter such as a radio station or an airport which can interfere with normal operation of the transmitter.
- The batteries may have been consumed. Check the battery in the transmitter. To replace the battery, see “REPLACING TRANSMITTER BATTERY” below.

If you lose your transmitter, contact your Toyota dealer as soon as possible to avoid the possibility of theft, or an accident. (See “If you lose your wireless remote control transmitter” on page 183 in Section 5.)

For vehicles sold in U.S.A.

This device complies with Part 15 of the FCC Rules. Operation is subject to the following two conditions:

(1) This device may not cause harmful interference, and (2) this device must accept any interference received, including interference that may cause undesired operation.

NOTICE:

This equipment has been tested and found to comply with the limits for a Class B digital device, pursuant to Part 15 of the FCC Rules. These limits are designed to provide reasonable protection against harmful interference in a residential installation. This equipment generates, uses and can radiate radio frequency energy and, if not installed and used in accordance with the instructions, may cause harmful interference to radio communications. However, there is no guarantee that interference will not occur in a particular installation. If this equipment does cause harmful interference to radio or television reception, which can be determined by turning the equipment off and on, the user is encouraged to try to correct the interference by one or more of the following measures:

- Reorient or relocate the receiving antenna.
- Increase the separation between the equipment and receiver.
- Connect the equipment into an outlet on a circuit different from that to which the receiver is connected.
- Consult the dealer or an experienced radio/TV technician for help.

FCC WARNING:

Changes or modifications not expressly approved by the party responsible for compliance could void the user’s authority to operate the equipment.

For vehicles sold in Canada

Operation is subject to the following two conditions: (1) this device may not cause interference, and (2) this device must accept any interference, including interference that may cause undesired operation of this device.

REPLACING TRANSMITTER BATTERY

For replacement, use CR2016 lithium battery or equivalent.

⚠ CAUTION

Special care should be taken that small children do not swallow the removed transmitter battery or components.

NOTICE

- ***During replacing the transmitter battery, do not push the "LOCK" and "UNLOCK" switches many times.***
- ***When replacing the transmitter battery, be careful not to lose the components.***
- ***Replace only with the same or equivalent type recommended by a Toyota dealer.***
- ***Dispose of used batteries according to the local laws.***

Replace the transmitter battery by the following procedures.

1. Using a coin or equivalent, open the transmitter case.

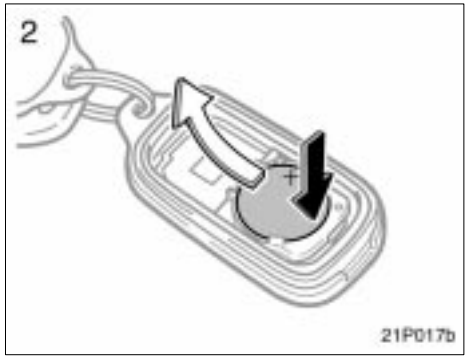

2. Remove the discharged transmitter battery.

NOTICE

Do not bend the terminals.

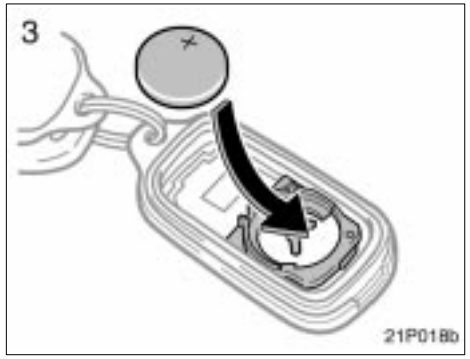

3. Put a new transmitter battery with positive (+) side up.

Close the transmitter case securely.

NOTICE

- ***Make sure the positive side and negative side of the transmitter battery should be faced correctly.***
- ***Do not replace the battery with wet hands. Water may cause unexpected rust.***
- ***Do not touch or move any components inside the transmitter, or it may interfere with proper operation.***
- ***Be careful not to bend the electrode of the transmitter battery insertion and that dust or oils do not adhere to the transmitter case.***
- ***Close the transmitter case securely.***

After replacing battery, check that the transmitter operates properly. If the transmitter still does not operate properly, contact your Toyota dealer.

Power windows

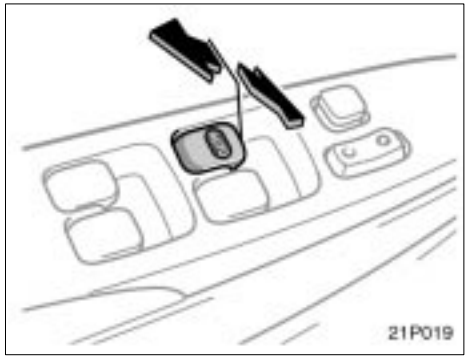

The windows can be operated with the switch on each door.

The power windows work when the ignition switch is in the “ON” position.

Key off operation: If both front doors are closed, they work for 45 seconds even after the ignition switch is turned off. They stop working when either front door is opened.

OPERATING THE DRIVER’S WINDOW

Use the switch on the driver’s door.

Normal operation: The window moves as long as you hold the switch.

To open: Lightly push down the switch.
To close: Lightly pull up the switch.

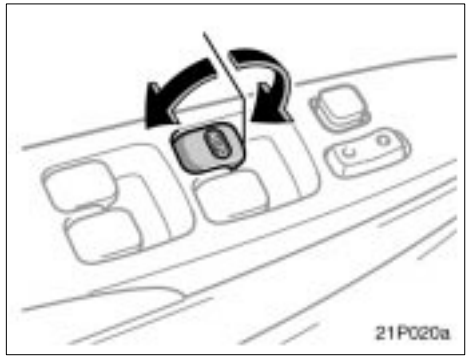

Automatic operation: Push the switch completely down or pull it completely up, and then release it. The window will fully open or close. To stop the window partway, lightly move the switch in the opposite direction and then release it.

Jam protection function: During automatic closing operation or key off closing operation, the window stops and opens half–way if something gets caught between the window and window frame.

If the window receives a strong impact, this function may work even if nothing is caught.

⚠ CAUTION

- **Never try jamming any part of your body to make the jam protection function work intentionally.**
- **The jam protection function may not work if something gets caught just before the window is fully closed.**

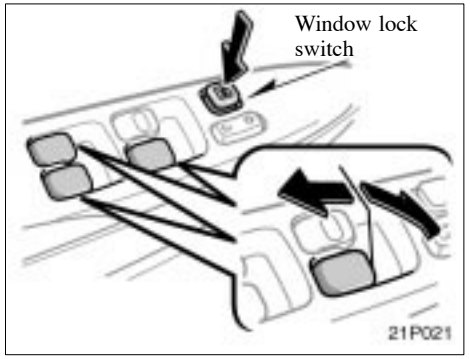

OPERATING THE PASSENGERS' WINDOWS

Use the switch on each passenger's door or the switches on the driver's door that control each passengers' window.

The window moves as long as you hold the switch.

To open: Push down the switch.
To close: Pull up the switch.

If you push in the window lock switch on the driver's door, the passengers' windows cannot be operated.

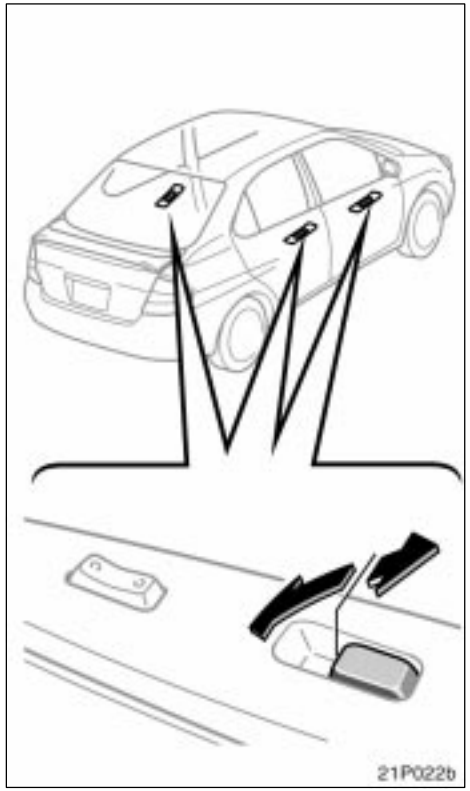

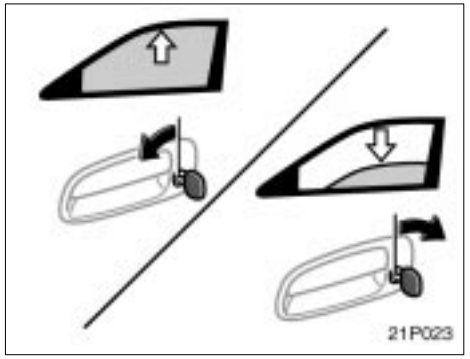

OPERATING THE DRIVER'S WINDOW FROM OUTSIDE THE VEHICLE

The driver's window can be raised or lowered using an ignition key.

Insert the ignition key into the key hole.

To close the window: Turn the key in the locking direction and hold it.

After the door is locked, the window begins to close. To stop in the middle, return the key.

To open the window: Turn the key in the unlocking direction and hold it.

After the door is unlocked, the window begins to open. To stop in the middle, return the key.

⚠ CAUTION

To avoid serious personal injury, you must do the following.

- **Always make sure the head, hands and other parts of the body of all occupants are kept completely inside the vehicle before you close the power windows. If someone's neck, head or hands gets caught in a closing window, it could result in a serious injury. When anyone closes the power windows, be sure that they operate the windows safely.**
- **When small children are in the vehicle, never let them use the power window switches without supervision. Use the window lock switch to prevent them from making unexpected use of the switches.**
- **Never leave small children alone in the vehicle, especially with the ignition key still inserted. They could use the power window switches and get trapped in a window. Unattended children can become involved in serious accidents.**

Trunk lid—

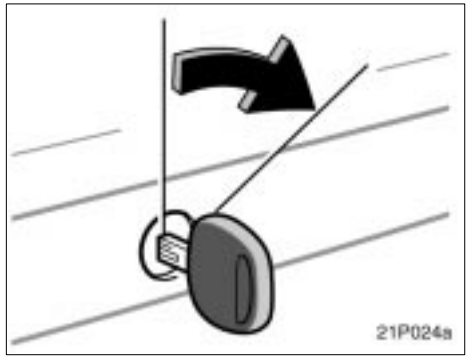

To open the trunk lid from the outside, insert the key and turn it clockwise.

See "Luggage stowage precautions" on page 156 in Section 3 for precautions to observe in loading luggage.

To close the trunk lid, lower it and press down on it. After closing the trunk lid, try pulling it up to make sure it is securely closed.

⚠ CAUTION

Keep the trunk lid closed while driving. This not only keeps the luggage from being thrown out, but also prevents exhaust gases from entering the vehicle.

- **Always lock the trunk lid and all doors, and keep away the vehicle keys out of children's reaches.**
- **Never leave children unattended in the vehicle. Unsupervised children may lock themselves in the vehicle or trunk and suffer serious injuries or death.**

—Lock release lever

To open the trunk lid from the driver's seat, pull up on the lock release lever.

—Lock release lever cancelling system

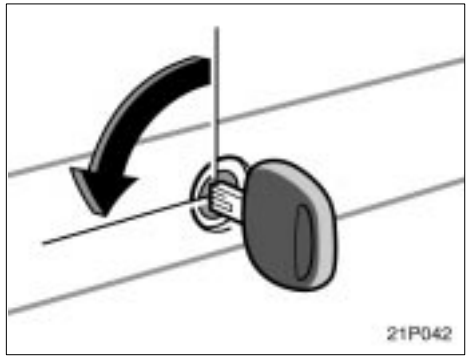

After closing the trunk lid, insert the master key and turn it counterclockwise to deactivate the lock release lever.

After closing the trunk lid, try pulling it up to make sure it is securely locked.

—Internal trunk release handle

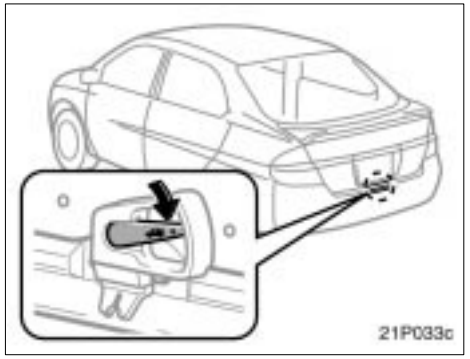

If a person is locked in the trunk, he or she can pull down the phosphorescent handle on the inside of trunk lid in case of emergency to open the trunk lid.

The phosphorescent (glow–in–the–dark) handle will continue to glow for a time after the trunk lid is closed. Exposing the handle to stronger light will cause it to glow longer.

Hood

To open the hood:

1. **Pull the hood lock release lever. The hood will spring up slightly.**

⚠ CAUTION

Before driving, be sure that the hood is closed and securely locked. Otherwise, the hood may open unexpectedly while driving and an accident may occur.

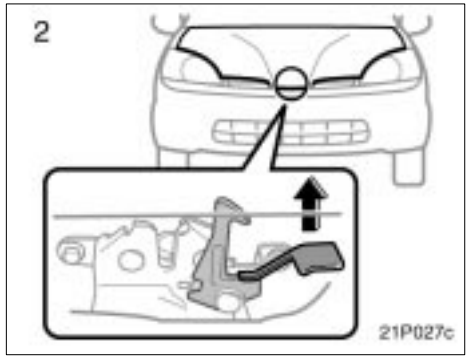

2. **In front of the vehicle, pull up the auxiliary catch lever and lift the hood.**

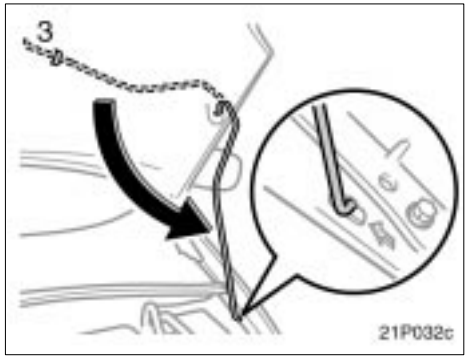

3. **Hold the hood open by inserting the support rod into the slot.**

Before closing the hood, check to see that you have not forgotten any tools, rags, etc. and return the support rod to its clip—this prevents rattles. Then lower the hood and make sure it locks into place. If necessary, press down gently on the front edge to lock it.

⚠ CAUTION

After inserting the support rod into the slot, make sure the rod supports the hood securely from falling down on to your head or body.

NOTICE

Be sure to return the support rod to its clip before closing the hood. Closing the hood with the support rod inserted into the slot could cause the hood to bend.

Theft deterrent system

To deter the vehicle theft, the system is designed to give an alarm if any of the doors, trunk or hood is forcibly unlocked or the battery terminal is disconnected and then reconnected when the vehicle is locked.

The alarm blows the horn intermittently and flashes the headlights and tail lights.

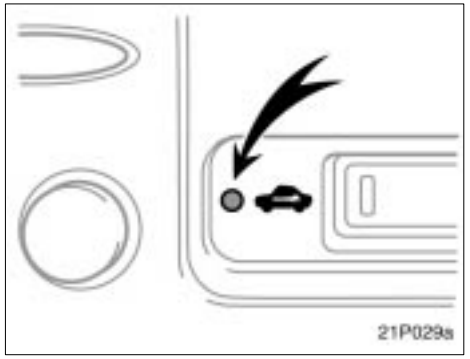

SETTING THE SYSTEM

1. Turn the ignition key to the ”LOCK” position and remove it.

The indicator light will start flashing when the key is removed from the ignition switch. (See ”Hybrid vehicle immobiliser system” on page 20 for details.)

2. Have all passengers get out of the vehicle.
3. Close and lock all the doors, trunk and hood.

The indicator light will come on when all the doors, trunk and hood are closed and locked.

The system will automatically be set after 30 seconds. When the system is set, the indicator light will start flashing again.

4. After making sure the indicator light starts flashing, you may leave the vehicle.

Never leave anyone in the vehicle when you set the system, because unlocking from the inside will activate the system.

WHEN THE SYSTEM IS SET

Activating the system

The system will give the alarm under the following conditions:

- If any of the doors is unlocked or if the trunk or hood is forcibly opened without the key or wireless remote control transmitter.
- If the battery terminal is disconnected and then reconnected.

The indicator light will come on when the system is activating.

If any of the doors are unlocked without the key or wireless remote control transmitter and the key is not in the ignition switch, all the doors will be automatically locked again.

After 1 minute, the alarm will automatically stop and the indicator light will starts flashing again.

Reactivating the alarm

Once set, the system automatically resets the alarm after the alarm stops.

The alarm will activate again under the same circumstances described in ”Activating the system”.

Stopping the alarm

The alarm will be stopped by the following three ways:

- Turn the ignition key from the ”LOCK” to ”ON” position.
- Unlock any of the doors with the key or wireless remote control transmitter.
- Open the trunk with the key.

CANCELLING THE SYSTEM

The system will be cancelled by the above mentioned three ways.

If the tail lights come on for 2 seconds, the theft deterrent system has been alarmed. Check to see if there is any abnormality on your vehicle.

TESTING THE SYSTEM

1. Open all the windows.
2. Set the system as described above. The doors should be locked with the key or wireless remote control transmitter. Be sure to wait until the indicator light goes off or starts flashing.
3. Unlock any door from the inside. The system should activate the alarm.
4. Stopping the alarm as described above.
5. Repeat this operation for the other doors, trunk and hood. When testing on the trunk, also check that the system is activated when the auxiliary battery terminal is disconnected and then reconnected. When testing on the hood, release the lock with the hood lock release lever and raise the hood.

If the system does not work properly, have it checked by your Toyota dealer.

Fuel tank cap

1. To open the fuel filler door, pull the lever up.

When refueling, turn off the hybrid system.

⚠ CAUTION

- **Do not smoke, cause spark or allow open flames when refueling. The fumes are flammable.**
- **When opening the cap, do not remove the cap quickly. In hot weather, fuel under pressure could cause injury by spraying out the filler neck if the cap is suddenly removed.**
- **Insert the fuel nozzle fully, or fuel may splash out.**

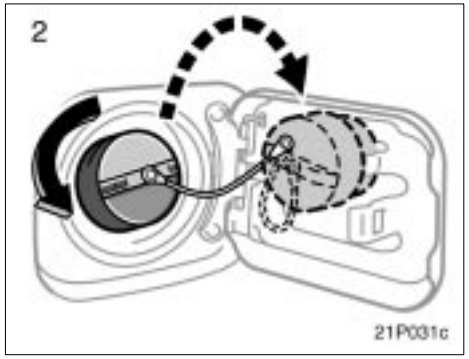

2. **To remove the fuel tank cap, turn the cap slowly counterclockwise, then pause slightly before removing it. After removing the cap, hang it on the cap hanger.**

It is not unusual to hear a slight swoosh when the cap is opened. When installing, turn the cap clockwise till you hear a click.

If the cap is not tightened securely, the malfunction indicator lamp comes on. Make sure the cap is tightened securely.

The indicator lamp goes off after driving several times. If the indicator lamp does not go off, contact your Toyota dealer as soon as possible.

⚠ CAUTION

- **Make sure the cap is tightened securely to prevent fuel spillage in case of an accident.**
- **Use only a genuine Toyota fuel tank cap for replacement. It is designed to regulate fuel tank pressure.**

SECTION 2– 2

OPERATION OF INSTRUMENTS AND CONTROLS

Seats, Seat belts, Steering wheel and mirrors

Seats 38
Front seatss 38
Head restraints 40
Seat belts 40
SRS driver and front passenger airbags 48
SRS side airbags 55
Child restraint 61
Tilt steering wheel 76
Outside rear view mirrors 76
Anti–glare inside rear view mirror 78
Vanity mirror 79

Seats

While the vehicle is being driven, all vehicle occupants should have the seatback upright, sit well back in the seat and properly wear the seat belts provided.

⚠ CAUTION

- **Do not drive the vehicle unless the occupants are properly seated. Do not allow them to sit on top of a folded–down seatback, or in the luggage compartment or cargo area. Persons not properly seated and/or properly restrained by seat belts can be severely injured in the event of emergency braking or a collision.**
- **During driving, do not allow passengers to stand up or move around between seats. Severe injuries can occur in the event of emergency braking or a collision.**

Front seats—

—Front seat precautions (on vehicles with SRS side airbags)

⚠ CAUTION

The SRS side airbags are installed in the driver and front passenger seats. Observe the following precautions.

- **Do not lean against the front door when the vehicle is in use. Otherwise you may be killed or seriously injured when the side airbag inflates with considerable speed and force.**
- **Do not modify or replace the seats or surface of the front seats with the side airbags. Such changes may disable the system or cause the side airbags to inflate, resulting in death or serious injury. Consult your Toyota dealer.**
- **Do not use accessories for the seats which cover the parts where the side airbags should inflate. Such accessories may prevent the side airbags from activating correctly, causing death or serious injury.**

—Seat adjustment precautions

Adjust the driver's seat so that the foot pedals, steering wheel and instrument panel controls are within easy reach of the driver.

⚠ CAUTION

- **Adjustments should not be made while the vehicle is moving, as the seat may unexpectedly move and cause the driver to lose control of the vehicle.**
- **When adjusting the seat, be careful not to hit the seat against a passenger or luggage.**
- **After adjusting the seat position, try sliding it forward and backward to make sure it is locked in position.**
- **After adjusting the seatback, exert body pressure to make sure it is locked in position.**
- **Do not put objects under the seats. The objects may interfere with the seat–lock mechanism or unexpectedly push up the seat position adjusting lever. Otherwise, the seat may suddenly move, causing the driver to lose control of the vehicle.**

—Adjusting front seats

- **While adjusting the seat, do not put your hands under the seat or near the moving parts. Otherwise, you may catch and injure your hands or fingers.**

1. SEAT POSITION ADJUSTING LEVER

Hold the center of the lever and pull it up. Then slide the seat to the desired position with slight body pressure and release the lever.

2. SEATBACK ANGLE ADJUSTING LEVER

Lean forward and pull the lever up. Then lean back to the desired angle and release the lever.

⚠ CAUTION

To reduce the risk of sliding under the lap belt during a collision, avoid reclining the seatback any more than needed. The seat belts provide maximum protection in a frontal or rear collision when the driver and the passenger are sitting up straight and well back in the seats. If you are reclined, the lap belt may slide past your hips and apply restraint forces directly to the abdomen. Therefore, in the event of a frontal collision, the risk of personal injury may increase with increasing recline of the seatback.

Head restraints

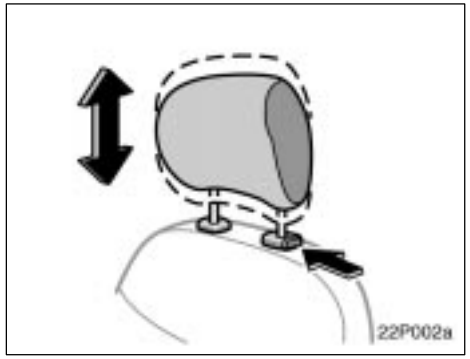

Front

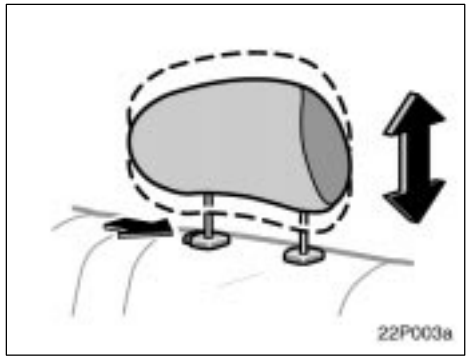

Rear

For your safety and comfort, adjust the head restraint before driving,

To raise: Pull it up.
To lower: Push it down while pressing the lock release button.

The head restraint is most effective when it is close to your head. Therefore, using a cushion on the seatback is not recommended.

⚠ CAUTION

- **Adjust the center of the head restraint so that it is closest to the top of your ears.**
- **After adjusting the head restraint, make sure it is locked in position.**
- **Do not drive with the head restraints removed.**

Seat belts—
—Seat belt precautions

Toyota strongly urges that the driver and passengers in the vehicle be properly restrained at all times with the seat belts provided. Failure to do so could increase the chance of injury and/or the severity of injury in accidents.

Child. Use a child restraint system appropriate for the child until the child becomes large enough to properly wear the vehicle's seat belts. (For details, see "Child restraint—" on page 61 in this section.)

If a child is too large for a child restraint system, the child should sit in the rear seat and must be restrained using the vehicle's seat belt. According to accident statistics, the child is safer when properly restrained in the rear seat than in the front seat.

If a child must sit in the front seat, the seat belts should be worn properly. If an accident occurs and seat belts are not worn properly, the force of the rapid inflation of the airbag may cause death or serious injury to the child.

Do not allow the child to stand up or kneel on either rear or front seats. An unrestrained child could suffer serious injury or death during emergency braking or a collision. Also, do not let the child sit on your lap. It does not provide sufficient restraint.

Pregnant woman. Toyota recommends the use of a seat belt. Ask your doctor for specific recommendations. The lap belt should be worn securely and as low as possible over the hips and not on the waist.

Injured person. Toyota recommends the use of a seat belt. Depending on the injury, first check with your doctor for specific recommendations.

⚠ CAUTION

Persons should ride in their seats properly wearing their seat belts whenever the vehicle is moving. Otherwise, they are much more likely to suffer serious bodily injury or death in the event of sudden braking or a collision.

When using the seat belts, observe the following:

- **Use the belt for only one person at a time. Do not use a single belt for two or more people—even children.**
- **Avoid reclining the seatbacks too much. The seat belts provide maximum protection when the seatbacks are in the upright position. (Refer to the seat adjustment instructions.)**
- **Be careful not to damage the belt webbing or hardware. Take care that they do not get caught or pinched in the seat or doors.**
- **Inspect the belt system periodically. Check for cuts, fraying, and loose parts. Damaged parts should be replaced. Do not disassemble or modify the system.**
- **Keep the belts clean and dry. If they need cleaning, use a mild soap solution or lukewarm water. Never use bleach, dye or abrasive cleaners—they may severely weaken the belts. (See "Cleaning the interior" on page 189 in Section 6.)**
- **Replace the belt assembly (including bolts) if it has been used in a severe impact. The entire assembly should be replaced even if damage is not obvious.**

—Front and rear seat belts

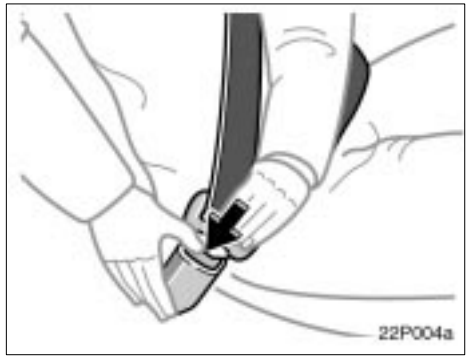

Adjust the seat as needed (Front seats only) and sit up straight and well back in the seat. To fasten your belt, pull it out of the retractor and insert the tab into the buckle.

You will hear a click when the tab locks into the buckle.

The seat belt length automatically adjusts to your size and the seat position.

The retractor will lock the belt during a sudden stop or on impact. It also may lock if you lean forward too quickly. A slow, easy motion will allow the belt to extend, and you can move around freely.

If the seat belt cannot be pulled out of the retractor, firmly pull the belt and release it. You will then be able to smoothly pull the belt out of the retractor.

When a passenger's shoulder belt is completely extended and is then retracted even slightly, the belt is locked in that position and cannot be extended. This feature is used to hold the child restraint system securely. (For details, see "Child restraint—" on page 61 in this Section.) To free the belt again, fully retract the belt and then pull the belt out once more.

⚠ CAUTION

- **After inserting the tab, make sure the tab and buckle are locked and that the belt is not twisted.**
- **Do not insert coins, clips, etc. in the buckle as this may prevent you from properly latching the tab and buckle.**
- **If the seat belt does not function normally, immediately contact your Toyota dealer. Do not use the seat until the seat belt is fixed. It cannot protect an adult occupant or your child from injury.**

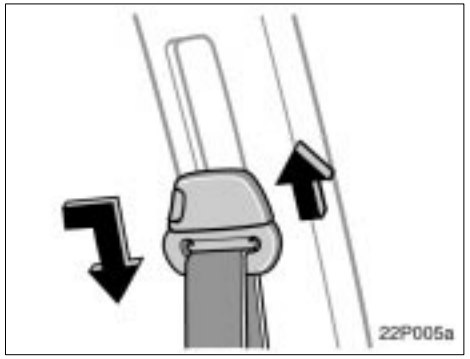

Seat belts with an adjustable shoulder anchor—

Adjust the shoulder anchor position to your size.

To raise: Slide the anchor up.
To lower: Push in the lock release button and slide the anchor down.

After adjustment, make sure the anchor is locked in position.

⚠ CAUTION

Always make sure the shoulder belt is positioned across the center of your shoulder. The belt should be kept away from your neck, but not falling off your shoulder. Failure to do so could reduce the amount of protection in an accident and cause serious injuries in a collision.

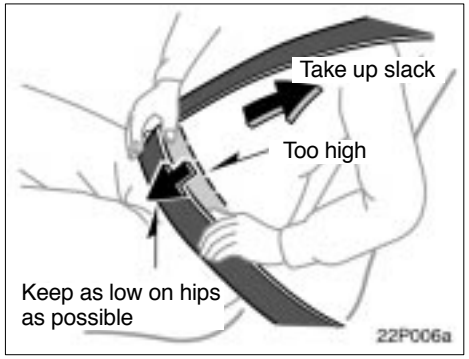

Adjust the position of the lap and shoulder belts.

Position the lap belt as low as possible on your hips—not on your waist, then adjust it to a snug fit by pulling the shoulder portion upward through the latch plate.

⚠ CAUTION

- **Both high–positioned lap belts and loose–fitting belts could cause serious injuries due to sliding under the lap belt during a collision or other unintended result. Keep the lap belt positioned as low on hips as possible.**
- **For your safety, do not place the shoulder belt under your arm.**

To release the belt, press the buckle–release button and allow the belt to retract.

If the belt does not retract smoothly, pull it out and check for kinks or twists. Then make sure it remains untwisted as it retracts.

—Seat belt extender

If your seat belts cannot be fastened securely because they are not long enough, a personalized seat belt extender is available from your Toyota dealer free of charge

Please contact your local Toyota dealer to order the proper required length for the extender. Bring the heaviest coat you expect to wear for proper measurement and selection of length. Additional ordering information is available at your Toyota dealer.

⚠ CAUTION

When using the seat belt extender, observe the following precautions. Failure to follow these instructions could reduce the effectiveness of the seat belt restraint system in case of vehicle accident, increasing the chance of personal injury.

- **Never use the seat belt extender if you can fasten the seat belt without it.**
- **Remember that the extender provided for you may not be safe when used on a different vehicle, for another person, or at a different seating position than the one originally intended.**

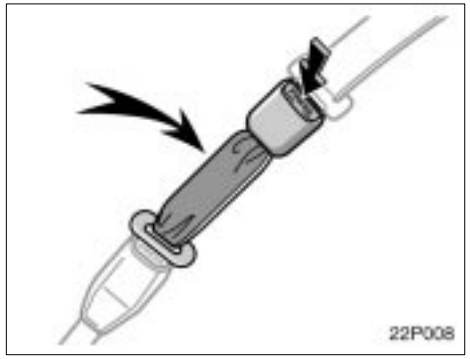

To connect the extender to the seat belt, insert the tab into the seat belt buckle so that the "PRESS" signs on the buckle–release buttons of the extender and the seat belt are both facing outward as shown.

You will hear a click when the tab locks into the buckle.

When releasing the seat belt, press on the buckle–release button on the extender, not on the seat belt. This helps prevent damage to the vehicle interior and extender itself.

When not in use, remove the extender and store in the vehicle for future use.

⚠ CAUTION

- **After inserting the tab, make sure the tab and buckle are locked and that the lap and shoulder portions of the belt is not twisted.**
- **Do not insert coins, clips, etc. in the buckle as this may prevent you from properly latching the tab and buckle.**
- **If the seat belt does not function normally, immediately contact your Toyota dealer. Do not use the seat until the seat belt is fixed. It cannot protect an adult occupant or your child from injury.**

—Front seat belt pretensioners

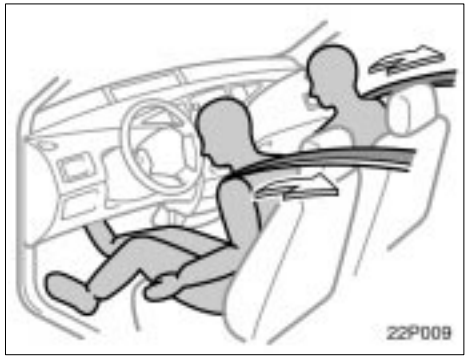

The driver and front passenger's seat belts pretensioners are designed to be activated in response to a severe frontal impact.

When the airbag sensor detects the shock of a severe frontal impact, the front seat belts are quickly drawn back in by the retractor so that the belts snugly restrain the front seat occupants.

The front seat belt pretensioners are activated even with no passenger in the front seat.

Collisions occurring at certain speeds and angles may cause the seat belt pretensioners and SRS airbags not to operate all together.

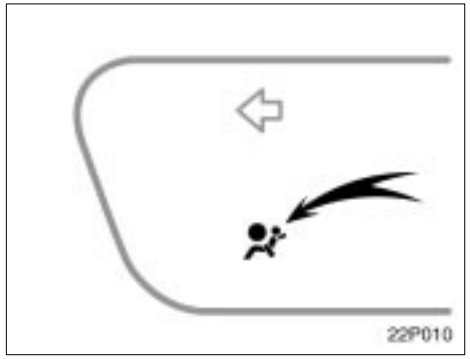

This indicator comes on when the ignition key is turned to the "ACC" or "ON" position. It goes off after about 6 seconds. This means the front seat belt pretensioners are operating properly.

The warning light system monitors the airbag sensor assembly, front airbag sensors, side airbag sensors, front seat belt pretensioner assemblies, warning light, interconnecting wiring and power sources. (For details, see "Service reminder indicators and warning buzzers" on page 91 in Section 2–4.)

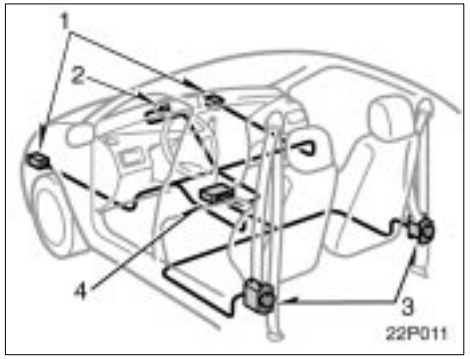

The front seat belt pretensioner system mainly consists of the following components and their locations are shown in the illustration.

1. Front airbag sensors
2. SRS warning light
3. Front seat belt pretensioner assemblies
4. Airbag sensor assembly

The front seat belt pretensioners are controlled by the airbag sensor assembly. The airbag sensor assembly consists of a safing sensor and airbag sensor.

When the front seat belt pretensioners are activated, an operating noise may be heard and a small amount of smoke–like gas may be released. This gas is harmless and does not indicate that a fire is occurring.

Once the front seat belt pretensioners have been activated, the seat belt retractors remain locked.

⚠ CAUTION

Do not modify, remove, strike or open the front seat belt pretensioner assemblies, airbag sensor or surrounding area or wiring. Doing any of these may cause sudden operation of the front seat belt pretensioners or disable the system, which could result in death or serious injury.

Failure to follow these instructions can result in death or serious injuries.

NOTICE

Do not perform any of the following changes without consulting your Toyota dealer. Such changes can interfere with proper operation of the front seat belt pretensioners in some cases.

- ***Installation of electronic devices such as a mobile two–way radio, cassette tape player or compact disc player***
- ***Repairs on or near the front seat belt retractor assemblies***
- ***Modification of the suspension system***
- ***Modification of the front end structure***
- ***Attachment of a grille guard (bull bar, kangaroo bar, etc.), snowplow, winches or any other equipment to the front end***
- ***Repairs made on or near the front fenders, front end structure or console***

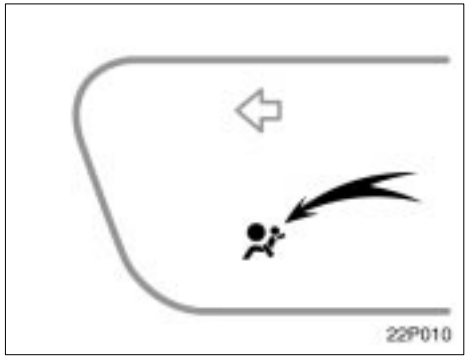

This front seat belt pretensioner system has a service reminder indicator to inform the driver of operating problems. If either of the following conditions occurs, this indicates a malfunction of the airbags or pretensioners. Contact your Toyota dealer as soon as possible to service the vehicle.

- The light does not come on when the ignition key is turned to the “ACC” or “ON” position, or remains on.
- The light comes on or flashes while driving.
- If either front seat belt does not retract or can not be pulled out due to a malfunction or activation of the relevant front seat pretensioner.

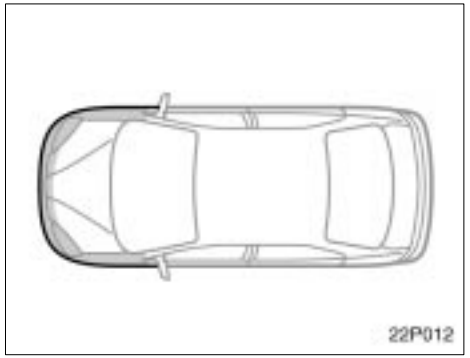

In the following cases, contact your Toyota dealer as soon as possible:

- The front seat belt pretensioner assembly or surrounding area has been damaged.
- The front part of the vehicle (shaded in the illustration) was involved in an accident that was not severe enough to cause the front seat belt pretensioners to operate.
- Either front seat belt pretensioner assembly or surrounding area is scratched, cracked, or otherwise damaged.

SRS driver and front passenger airbags

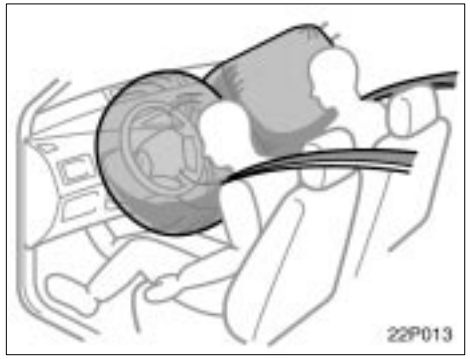

The SRS (Supplemental Restraint System) front airbags are designed to provide further protection for the driver and front passenger in addition to the primary safety protection provided by the seat belts.

In response to a severe frontal impact, the SRS front airbags work together with the seat belts to help reduce injury by inflating. The SRS front airbags help to reduce injuries mainly to the driver's or front passenger's head or chest directly hitting the steering wheel or dashboard. The front passenger airbag is activated even with no passenger in the front seat.

Be sure to wear your seat belt properly.

Your vehicle is equipped with a crash sensing and diagnostic module, which will record the use of the seat belt restraint system by the driver and passenger when the SRS airbags are inflated.

⚠ CAUTION

A driver or front passenger who is too close to the steering wheel or dashboard during airbag deployment can be killed or seriously injured. Toyota strongly recommends that:

- **The driver sit as far back as possible from the steering wheel while still maintaining control of the vehicle.**
- **The front passenger sit as far back as possible from the dashboard.**
- **All vehicle occupants be properly restrained using the available seat belts.**

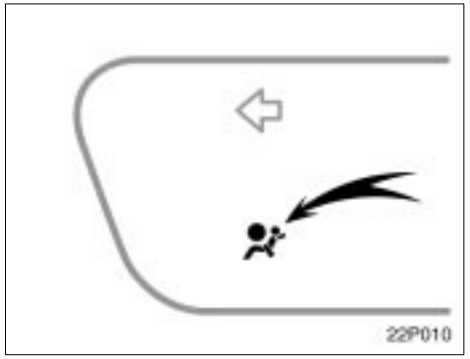

This indicator comes on when the ignition key is turned to the "ACC" or "ON" position. It goes off after about 6 seconds. This means the SRS front airbags are operating properly.

The warning light system monitors the airbag sensor assembly, front airbag sensors, side airbag sensors, front seat belt pretensioner assemblies, warning light, interconnecting wiring and power sources. (For details, see "Service reminder indicators and warning buzzers" on page 91 in Section 2–4.)

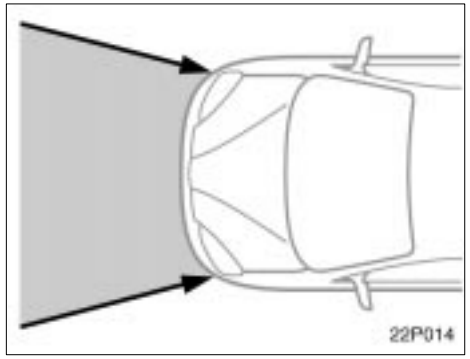

The SRS front airbag system is designed to activate in response to a severe frontal impact within the shaded area between the arrows in the illustration.

The SRS front airbags will deploy if the severity of the impact is above the designed threshold level, comparable to an approximate 25 km/h (15 mph) collision when impacting straight into a fixed barrier that does not move or deform.

If the severity of the impact is below the above threshold level, the SRS front airbags may not deploy.

However, this threshold velocity will be considerably higher if the vehicle strikes an object, such as a parked vehicle or sign pole, which can move or deform on impact, or if it is involved in an underride collision (e.g. a collision in which the nose of the vehicle “underrides”, or goes under, the bed of a truck, etc.).

It is possible that in some collisions at the lower zone of airbag sensor detection and activation, the SRS airbags and seat belt pretensioners will not operate all together.

For the safety of all occupants, always wear your seat belts properly.

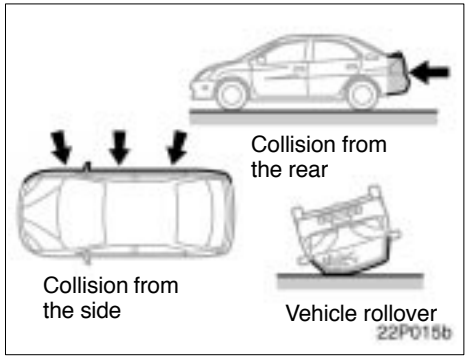

The SRS front airbags are not designed to inflate if the vehicle is involved in a side or rear collision, if it rolls over, or if it is involved in a low–speed frontal collision.

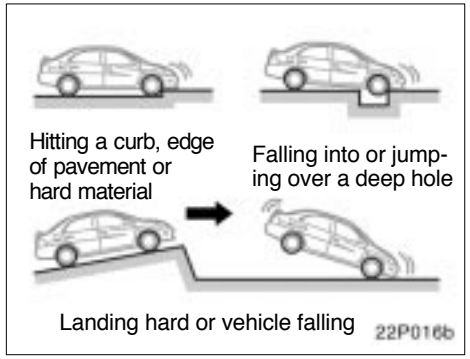

The SRS front airbags may deploy if a serious impact occurs to the underside of your vehicle. Some examples are shown in the illustration.

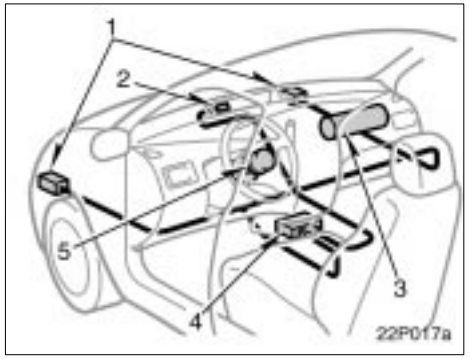

The SRS airbag system consists mainly of the following components and their locations are shown in the illustration.

1. Front airbag sensors
2. SRS warning light
3. Airbag module for front passenger (airbag and inflator)
4. Airbag sensor assembly
5. Airbag module for driver (airbag and inflator)

The airbag sensor assembly consists of a safing sensor and airbag sensor.

In a severe frontal impact, the sensors detect deceleration and the system triggers the airbag inflators. At this time a chemical reaction in the inflators quickly fills the airbags with non–toxic gas to help restrain the forward motion of the occupants.

When the airbags inflate, they produce a fairly loud noise and release some smoke and residue along with non–toxic gas. This does not indicate a fire. This gas is normally harmless; however, for those who have delicate skin, it may cause a minor skin irritation. Be sure to wash off any residue as soon as possible to prevent any potential skin irritation.

Deployment of the airbags happens in a fraction of a second, so the airbags must inflate with considerable force. While the system is designed to reduce serious injuries, it may also cause minor burns or abrasions and swelling.

Parts of the airbag module (steering wheel hub, dashboard) may be hot for several minutes, but the airbags themselves will not be hot. The airbags are designed to inflate only once.

A crash severe enough to inflate the airbags may break the windshield as the vehicle buckles. In vehicles with a passenger airbag the windshield may also be damaged by absorbing some of the force of the inflating airbag.

⚠ CAUTION

- **The SRS airbag system is designed only as a supplement to the primary protection of the driver side and front passenger side seat belt systems. The front seat occupants can be killed or seriously injured by the inflating airbags if they do not wear the available seat belts properly. During sudden braking just before a collision, an unrestrained driver or front passenger can move forward into direct contact with or close proximity to the airbag which may then deploy during the collision. To ensure maximum protection in an accident, the driver and all passengers in the vehicle must wear their seat belts properly. Wearing a seat belt during an accident reduces the chances of death or serious injury or being thrown out of the vehicle. For instructions and precautions concerning the seat belt system, see "Seat belts—" on page 40 in this section.**

- **Improperly seated and/or restrained infants and children can be killed or seriously injured by the deploying front airbags. An infant or child who is too small to use a seat belt should be properly secured using a child restraint system. Toyota strongly recommends that all infants and children be placed in the rear seat of the vehicle and properly restrained. The rear seat is the safest for infants and children. For instructions concerning the installation of a child restraint system, see "Child restraint—" on page 61 in this section.**

- **Never put a rear–facing child restraint system on the front passenger seat because the force of the rapid inflation of the front passenger airbag can cause death or serious injury to the child.**

- **A forward–facing child restraint system should be allowed to be put on the front seat only when it is unavoidable. Always move the seat as far back as possible, because the force of the deploying front airbag could cause death or serious injury to the child.**
- **On vehicles with side airbags, do not allow the child to lean against the front door or around the front door even if the child is seated in the child restraint system. It is dangerous if the side airbag inflates, because the impact could cause death or serious injury to the child.**

- **For instructions concerning the installation of a child restraint system, see “Child restraint—” on page 61 in this section.**

- **Do not sit on the edge of the seat or lean over the dashboard when the vehicle is in use, since the front airbags inflate with considerable speed and force. Otherwise, you may be killed or seriously injured. Sit up straight and well back in the seat, and always use your seat belt properly.**

- **Do not allow a child to stand up or to kneel on the front passenger seat, since the front airbag inflates with considerable speed and force. Otherwise, the child may be killed or seriously injured.**
- **Do not hold a child on your lap or in your arms. Use a child restraint system in the rear seat. For instructions concerning the installation of a child restraint system, see "Child restraint—" on page 61 in this section.**

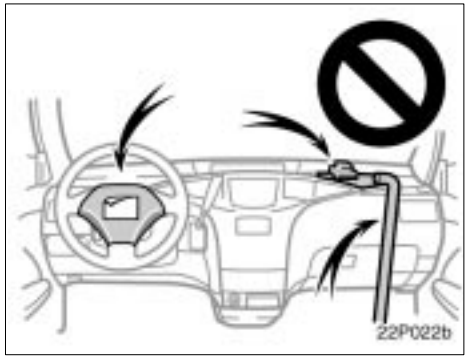

- **Do not put objects or your pets on or in front of the dashboard or steering wheel pad that houses the front airbag system. They might restrict inflation or cause death or serious injury as they are projected rearward by the force of deploying airbags. Likewise, the driver and front passenger should not hold objects in their arms or on their knees.**

- **Do not modify or remove any wiring. Do not modify, remove, strike or open any components, such as the steering wheel pad, steering wheel, column cover, front passenger airbag cover, front passenger airbag or airbag sensor assembly. Doing any of these may cause sudden SRS front airbag inflation or disable the system, which could result in death or serious injury.**

Failure to follow these instructions can result in death or serious injury.

NOTICE

Do not perform any of the following changes without consulting your Toyota dealer. Such changes can interfere with proper operation of the SRS front airbag system in some cases.

- ***Installation of electronic devices such as a mobile two–way radio, cassette tape player or compact disc player***
- ***Modification of the suspension system***
- ***Modification of the front end structure***
- ***Attachment of a grille guard (bull bar, kangaroo bar, etc.), snowplow, winches or any other equipment to the front end***
- ***Repairs made on or near the front fenders, front end structure, console, steering column, steering wheel or dashboard near the front passenger airbag***

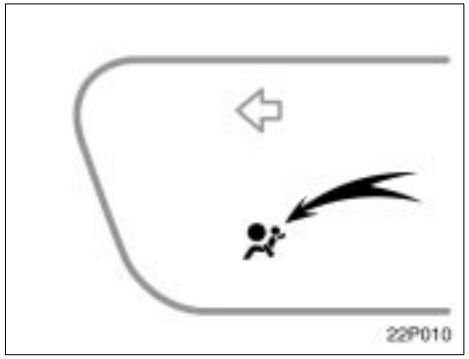

This SRS front airbag system has a service reminder indicator to inform the driver of operating problems. If either of the following conditions occurs, this indicates a malfunction of the airbags. Contact your Toyota dealer as soon as possible to service the vehicle.

- The light does not come on when the ignition key is turned to the “ACC” or “ON” position, or the light remains on.
- The light comes on while driving.

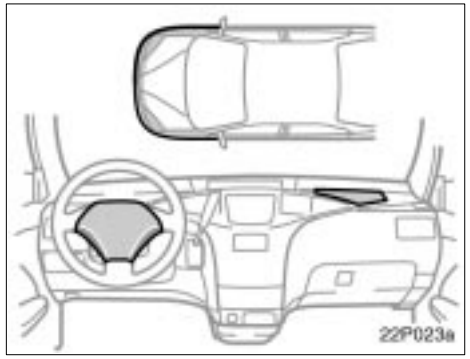

In the following cases, contact your Toyota dealer as soon as possible:

- The SRS front airbags have been inflated.
- The front of the vehicle (shaded in the illustration) was involved in an accident that was not severe enough to cause the SRS front airbags to inflate.
- The pad section of the steering wheel or front passenger airbag cover (shaded in the illustration) is scratched, cracked, or otherwise damaged.

NOTICE
Do not disconnect the battery cables before contacting your Toyota dealer.

SRS side airbags

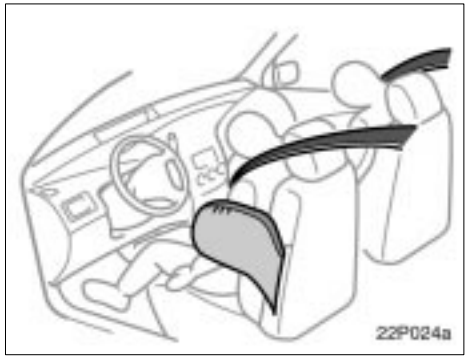

The SRS (Supplemental Restraint System) side airbags are designed to provide further protection for the driver and front passenger in addition to the primary safety protection provided by the seat belts.

In response to a severe side impact, the SRS side airbags work together with the seat belts to help reduce injury by inflating. The SRS side airbags help to reduce injuries mainly to the driver's or front passenger's chest. The SRS side airbag on the passenger seat is activated even with no passenger in the front seat.

Be sure to wear your seat belt properly.

Your vehicle is equipped with a crash sensing and diagnostic module, which will record the use of the seat belt restraint system by the driver and passenger when the SRS side airbags are inflated.

⚠ CAUTION

SRS side airbags inflate with considerable force. To avoid potential death or serious injury when they inflate, the driver and front passenger must:

- **Wear their seat belts properly.**
- **Remain properly seated with their back upright and against the seat at all times.**

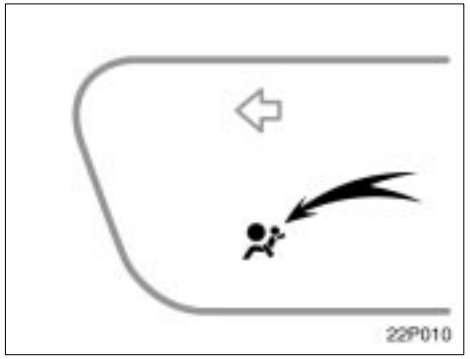

This indicator comes on when the ignition key is turned to the "ACC" or "ON" position. It goes off after about 6 seconds. This means the SRS side airbags are operating properly.

The warning light system monitors the airbag sensor assembly, front airbag sensors, side airbag sensors, front seat belt pretensioner assemblies, warning light, interconnecting wiring and power sources. (For details, see "Service reminder indicators and warning buzzers" on page 91 in Section 2–4.)

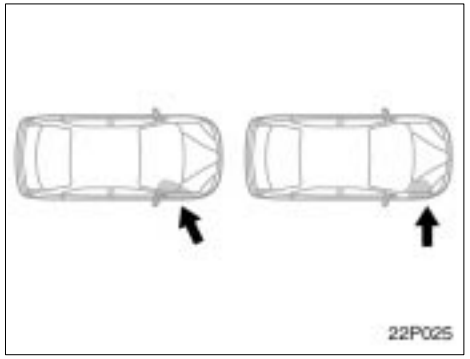

The SRS side airbag system may not inflate if the vehicle is subjected to a collision from the side at certain angles, or a collision to the side of the vehicle body other than the passenger compartment as shown in the illustration.

The SRS side airbags are designed to inflate when the passenger compartment area suffers a severe impact from the side.

For the safety of all occupants, always wear your seat belts properly.

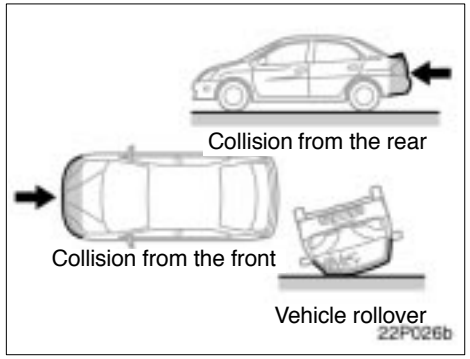

The SRS side airbags are not designed to inflate if the vehicle is involved in a front or rear collision, if it rolls over, or if it is involved in a low–speed side collision.

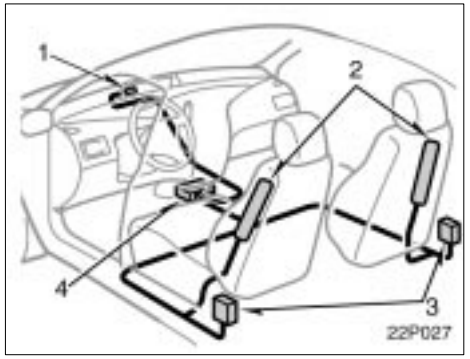

The SRS side airbag system consists mainly of the following components, and their locations are shown in the illustration.

1. SRS warning light
2. Side airbag modules (airbag and inflator)
3. Side airbag sensors
4. Airbag sensor assembly

The SRS side airbag system is controlled by the airbag sensor assembly. The airbag sensor assembly consists of a safing sensor and airbag sensor.

In a severe side impact, the side airbag sensor triggers the side airbag inflators. Then a chemical reaction in the inflators quickly fills the airbags with non–toxic gas to help restrain the lateral motion of the occupants.

When the airbags inflate, they produce a fairly loud noise and release some smoke and residue along with non–toxic gas. This does not indicate a fire. This gas is normally harmless; however, for those who have delicate skin, it may cause a minor skin irritation. Be sure to wash off any residue as soon as possible to prevent any potential skin irritation.

Deployment of the airbags happen in a fraction of a second, so the airbags must inflate with considerable force. While the system is designed to reduce serious injuries, it may also cause minor burns or abrasions and swelling.

Front seats may be hot for several minutes, but the airbags themselves will not be hot. The airbags are designed to inflate only once.

⚠ CAUTION

- The SRS side airbag system is designed only as a supplement to the primary protection of the driver side and front passenger side seat belt systems. To ensure maximum protection in an accident, the driver and all passengers in the vehicle must wear their seat belts properly. Wearing a seat belt properly during an accident reduces the chances of death or serious injury or being thrown out of the vehicle. For instructions and precautions concerning the seat belt system, see "Seat belts" on page 40 in this section.

- Improperly seated and/or restrained infants and children can be killed or seriously injured by the deploying airbags. An infant or child who is too small to use a seat belt should be properly secured using a child restraint system. Toyota strongly recommends that all infants and children be placed in the rear seat of the vehicle and properly restrained. The rear seat is the safest for infants and children. For instructions concerning the installation of a child restraint system, see "Child restraint" on page 61 in this section.
- Do not allow a child to lean his/her head or any part of his/her body against the front door or the area of the seat from which the side airbag deploys even if he/she is seated in the child restraint system. It is dangerous if the side airbag inflates, and the impact could cause death or serious injury to the child. For instructions concerning the installation of a child restraint system, see "Child restraint" on page 61 in this section.

- Do not lean against the front door when the vehicle is in use, since the side airbag inflates with considerable speed and force. Otherwise, you may be killed or seriously injured.
- Sit up straight and well back in the seat, distributing your weight evenly in the seat. Do not apply excessive weight to the outer side of the front seats on vehicles with side airbags.

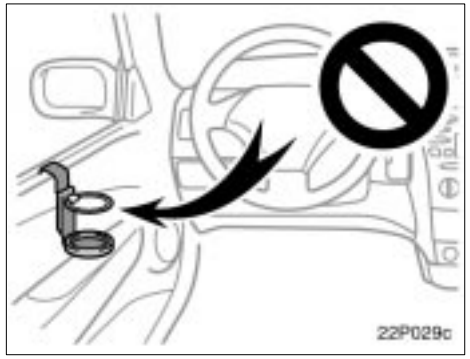

- **Do not attach a cup holder or any other device or object on or around the door. When the side airbag inflates, the cup holder or any other device or object will be thrown with great force or the side airbag may not activate correctly, resulting in death or serious injury. Likewise, the driver and front passenger should not hold objects in their arms or on their knees.**

- **Do not use accessories for the seats which cover the parts where the side airbags inflate. Such accessories may prevent the side airbags from activating correctly, causing death or serious injury.**
- **Do not modify or replace the seats or upholstery of front seats with the side airbags. Such changes may disable the system or cause the side airbags to inflate accidentally, resulting in death or serious injury.**

Failure to follow these instructions can result in death or serious injury. Consult your Toyota dealer about any repairs and modifications.

NOTICE

Do not perform any of the following changes without consulting your Toyota dealer. Such changes can interfere with proper operation of the SRS side airbag system in some cases.

- ***Installation of electronic devices such as a mobile two–way radio, cassette tape player or compact disc player***
- ***Modification of the suspension system***
- ***Modification of the side structure of the passenger compartment***
- ***Repairs made on or near the console or front seat***

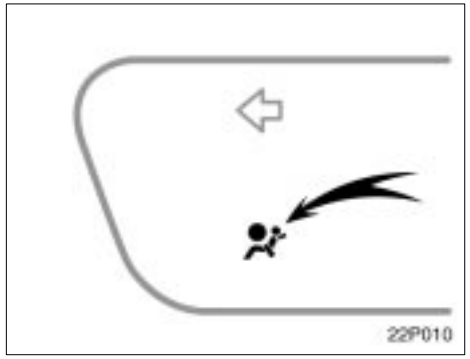

This SRS side airbag system has a service reminder indicator to inform the driver of operating problems. If either of the following conditions occurs, this indicates a malfunction of the airbags. Contact your Toyota dealer as soon as possible to service the vehicle.

- The light does not come on when the ignition key is turned to the “ACC” or “ON” position, or the light remains on.
- The light comes on or flashes while driving.

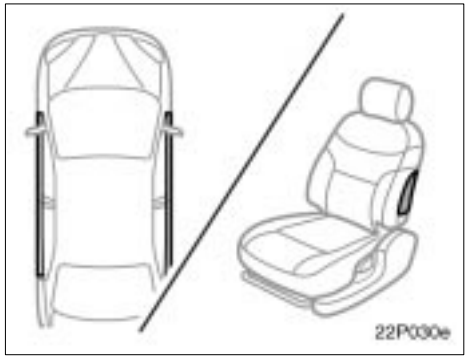

In the following cases, contact your Toyota dealer as soon as possible:

- The SRS side airbags have been inflated.
- The portion of the doors (shaded in the illustration) were involved in an accident that was not severe enough to cause the SRS side airbags to inflate.
- The surface of the seats with the side airbag (shaded in the illustration) is scratched, cracked, or otherwise damaged.

NOTICE
Do not disconnect the battery cables before contacting your Toyota dealer.

Child restraint—
—Child restraint precautions

Toyota strongly urges the use of child restraint systems for children small enough to use them.

The laws of all 50 states in the U.S.A. and Canada now require the use of a child restraint system.

Your vehicle conforms to SAEJ1819.

If a child is too large for a child restraint system, the child should sit in the rear seat and must be restrained using the vehicle's seat belt. See "Seat belts–" on page 40 for details.

⚠ CAUTION

- **For effective protection in automobile accidents and sudden stops, a child must be properly restrained, using a seat belt or child restraint system depending on the age and size of the child. Holding a child in your arms is not a substitute for a child restraint system. In an accident, the child can be crushed against the windshield, or between you and the vehicle's interior.**

- **Toyota strongly urges use of a proper child restraint system which conforms to the size of the child, and is put on the rear seat. According to accident statistics, the child is safer when properly restrained in the rear seat than in the front seat.**
- **Never put a rear–facing child restraint system on the front seat. In the event of an accident, the force of the rapid inflation of the airbag can cause death or serious injury if a rear–facing child restraint system is put on the front seat.**
- **Unless it is unavoidable, do not put a child restraint system on the front seat.**

- **A forward–facing child restraint system should be allowed to put on the front seat only when it is unavoidable. Always move the seat as far back as possible, because the force of the deploying airbag could cause death or serious injury to the child.**
- **On vehicles with side airbags, do not allow the child to lean against the front door or around the front door even if the child is seated in the child restraint system. It is dangerous if the side airbag inflates, and the impact could cause death or serious injury to the child.**
- **Make sure you have complied with all installation instructions provided by the child restraint manufacturer and that the system is properly secured.**

—Child restraint system

A child restraint system for a small child or baby must itself be properly restrained on the seat with the lap portion of the lap/shoulder belt. You must carefully consult the manufacturer's instructions which accompany child restraint system.

To provide proper restraint, use a child restraint system following the manufacturer's instructions about the appropriate age and size of the child for the child restraint system.

Install the child restraint system correctly following the instructions provided by its manufacturer. General directions are also provided under the following instructions.

The child restraint system should be installed on the rear seat. According to accident statistics, the child is safer when properly restrained in the rear seat than in the front seat.

⚠ CAUTION

- **Never put a rear–facing child restraint system on the front seat. In the event of an accident, the force of the rapid inflation of the airbag can cause death or serious injury if a rear–facing child restraint system is put on the front seat.**
- **Unless it is unavoidable, do not put a child restraint system on the front seat.**
- **A forward–facing child restraint system should be allowed to put on the front seat only when it is unavoidable. Always move the seat as far back as possible, because the force of the deploying airbag could cause death or serious injury to the child.**
- **On vehicles with side airbag, do not allow the child to lean against the front door or around the front door even if the child is seated in the child restraint system. It is dangerous if the side airbag inflates, and the impact could cause death or serious injury to the child.**
- **After installing the child restraint system, make sure it is secured in place following the manufacturer's instructions. If it is not restrained securely, it may cause death or serious injury to the child in the event of a sudden stop or accident.**

When not using the child restraint system, keep it secured with the seat belt or place it in the trunk or somewhere other than in the passenger compartment. This will prevent it from injuring passengers in the event of a sudden stop or accident.

For instructions about how to use the anchor bracket, see "—Using a top strap" on page 72 in this section.

—Types of child restraint system

Child restraint systems are classified into the following 3 types depending on the child's age and size.

(A) Infant seat
(B) Convertible seat
(C) Booster seat

Install the child restraint system following the instructions provided by its manufacturer.

Child restraint lower anchorages approved for your vehicle may also be used. See "—Installation with child restraint lower anchorages" on page 74 in this section.

(A) Infant seat

(C) Booster seat

(B) Convertible seat

—Installation with 3–point type seat belt

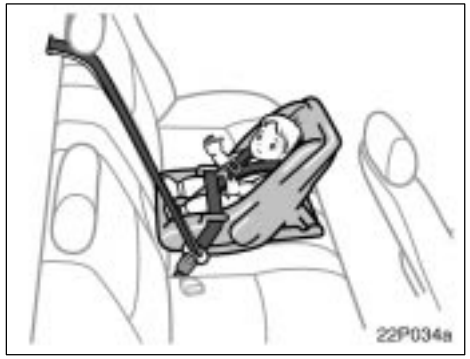

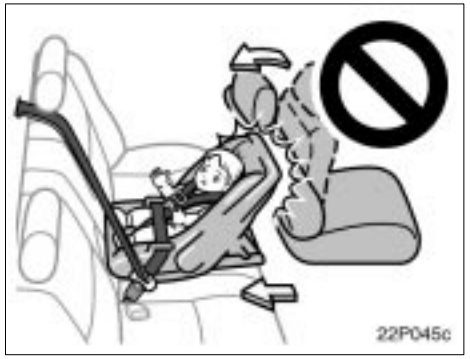

(A) INFANT SEAT INSTALLATION

An infant seat is used in rear–facing position only.

⚠ CAUTION

- **Never put a rear–facing child restraint system on the front passenger seat because the force of the rapid inflation of the front passenger airbag can cause death or serious injury to the child.**

- **Do not put a rear–facing child restraint system on the rear seat if it interferes with the lock mechanism of the front seats. This can cause death or serious injury to the child and front passenger in case of sudden braking or a collision.**
- **If the driver's seat position does not allow sufficient space for safe installation, install the child restraint system on the rear left seat.**

1. Run the lap and shoulder belt through or around the baby seat following the instructions provided by its manufacturer and insert the tab into the buckle taking care not to twist the belt. Keep the lap portion of the belt tight.

⚠ CAUTION

- **After inserting the tab, make sure the tab and buckle are locked and that the lap and shoulder portions of the belt are not twisted.**
- **Do not insert coins, clips, etc. in the buckle as this may prevent you from properly latching the tab and buckle.**
- **If the seat belt does not function normally, it cannot protect your child from injury. Contact your Toyota dealer immediately. Do not use the child restraint system until the seat belt is fixed.**

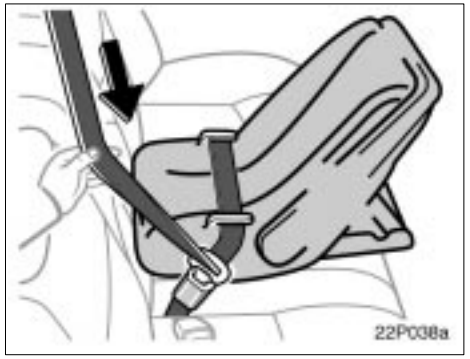

2. Fully extend the shoulder belt to put it in the lock mode. When the belt is then retracted even slightly, it cannot be extended.

To hold the infant seat securely, make sure the belt is in the lock mode before letting the belt retract.

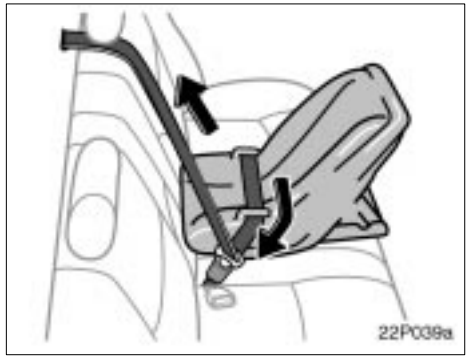

3. While pressing the infant seat firmly against the seat cushion and seatback, let the shoulder belt retract as far as it will go to hold the infant seat securely.

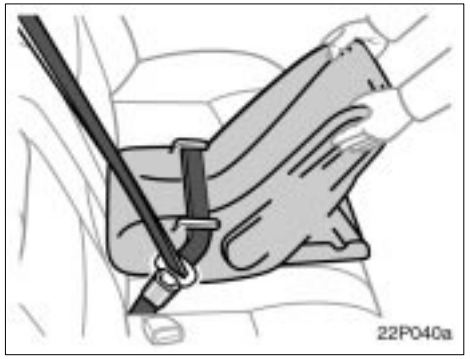

⚠ CAUTION

Push and pull the child restraint system in different directions to be sure it is secure. Follow all the installation instructions provided by its manufacturer.

4. To remove the baby seat, press the buckle–release button and allow the belt to retract completely. The belt will move freely again and be ready to work for an adult or older child passenger.

(B) CONVERTIBLE SEAT INSTALLATION

A convertible seat is used in forward–facing or rear–facing position depending on the child's age and size. When installing, follow the manufacturer's instruction about the applicable child's age and size as well as directions for installing the child restraint system.

⚠ CAUTION

- **Never put a rear–facing child restraint system on the front passenger seat because the force of the rapid inflation of the front passenger airbag can cause death or serious injury to the child.**

- **A forward–facing child restraint system should be allowed to be put on the front seat only when it is unavoidable. Always move the seat as far back as possible, because the force of the deploying airbag could cause death or serious injury to the child.**
- **On vehicles with side airbags, do not allow the child to lean against the front door or around the front door even if the child is seated in the child restraint system. It is dangerous if the side airbag inflates, and the impact could cause death or serious injury to the child.**

⚠ CAUTION

- **Do not put a rear–facing child restraint system on the rear seat if it interferes with the lock mechanism of the front seats. This can cause death or serious injury to the child and front passenger in case of sudden braking or a collision.**
- **If the driver's seat position does not allow sufficient space for safe installation, install the child restraint system on the rear left seat.**

1. Run the lap and shoulder belt through or around the convertible seat following the instructions provided by its manufacturer and insert the tab into the buckle taking care not to twist the belt. Keep the lap portion of the belt tight.

⚠ CAUTION

- **After inserting the tab, make sure the tab and buckle are locked and that the lap and shoulder portions of the belt are not twisted.**
- **Do not insert coins, clips, etc. in the buckle as this may prevent you from properly latching the tab and buckle.**
- **If the seat belt does not function normally, it cannot protect your child from injury. Contact your Toyota dealer immediately. Do not use the child restraint system until the seat belt is fixed.**

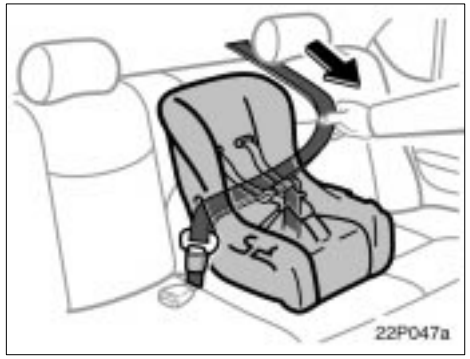

2. Fully extend the shoulder belt to put it in the lock mode. When the belt is then retracted even slightly, it cannot be extended.

To hold the convertible seat securely, make sure the belt is in the lock mode before letting the belt retract.

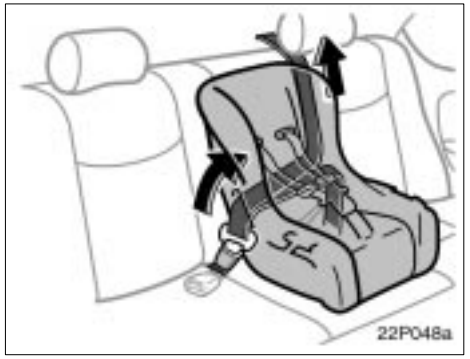

3. While pressing the convertible seat firmly against the seat cushion and seatback, let the shoulder belt retract as far as it will go to hold the convertible seat securely.

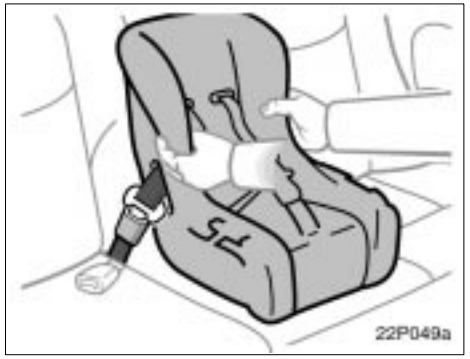

⚠ CAUTION

Push and pull the child restraint system in different directions to be sure it is secure. Follow all the installation instructions provided by its manufacturer.

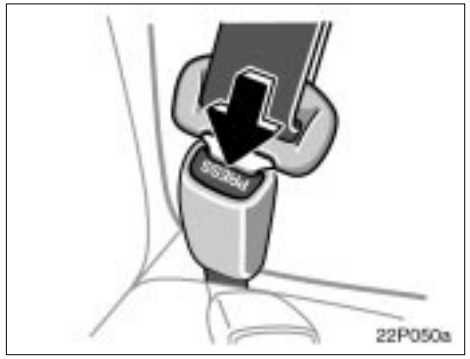

4. To remove the convertible seat, press the buckle–release button and allow the belt to retract completely. The belt will move freely again and be ready to work for an adult or older child passenger.

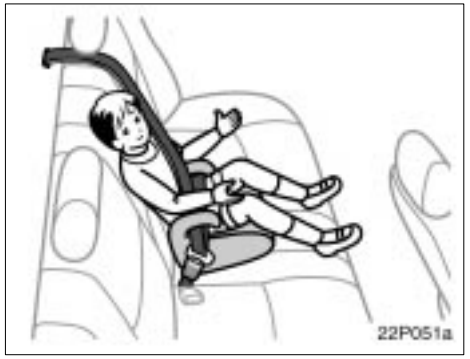

(C) BOOSTER SEAT INSTALLATION

A booster seat is used in forward–facing position only.

⚠ CAUTION

- **A forward–facing child restraint system should be allowed to be put on the front seat only when it is unavoidable. Always move the seat as far back as possible, because the force of the deploying airbag could cause death or serious injury to the child.**
- **On vehicles with side airbags, do not allow the child to lean against the front door or around the front door even if the child is seated in the child restraint system. It is dangerous if the side airbag inflates, and the impact could cause death or serious injury to the child.**

1. Sit the child on a booster seat. Run the lap and shoulder belt through or around the booster seat and child following the instructions provided by its manufacturer and insert the tab into the buckle taking care not to twist the belt.

Make sure the shoulder belt is correctly across the child's shoulder and that the lap belt is positioned as low as possible on child's hips. See "Seat belts—" on page 40 for details.

⚠ CAUTION

- **Always make sure the shoulder belt is positioned across the center of child's shoulder. The belt should be kept away from child's neck, but not falling off child's shoulder. Failure to do so could reduce the amount of protection in an accident and cause serious injuries in a collision.**
- **Both high–positioned lap belts and loose–fitting belts could cause serious injuries due to sliding under the lap belt during a collision or other unintended result. Keep the lap belt positioned as low on a child's hips as possible.**
- **For child's safety, do not place the shoulder belt under child's arm.**
- **After inserting the tab, make sure the tab and buckle are locked and that the lap and shoulder portions of the belt are not twisted.**
- **Do not insert coins, clips, etc. in the buckle as this may prevent your child from properly latching the tab and buckle.**

- **If the seat belt does not function normally, it cannot protect your child from injury. Contact your Toyota dealer immediately. Do not use the child restraint system until the seat belt is fixed.**

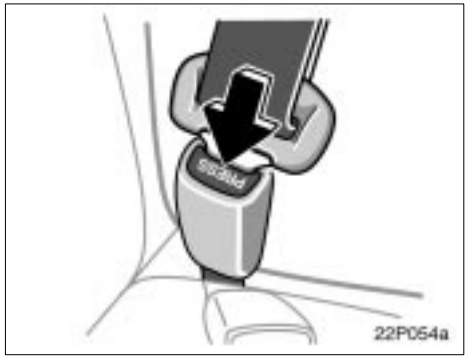

2. To remove the child restraint system, press the buckle–release button and allow the belt to retract.

—Using a top strap

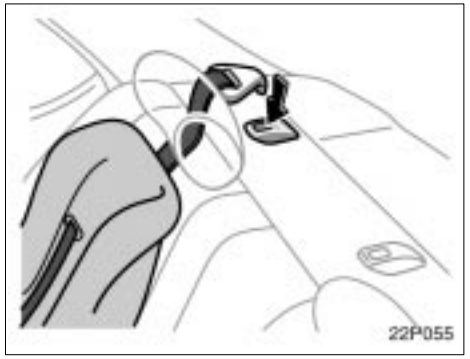

Follow the procedure below for a child restraint system that requires the use of a top strap.

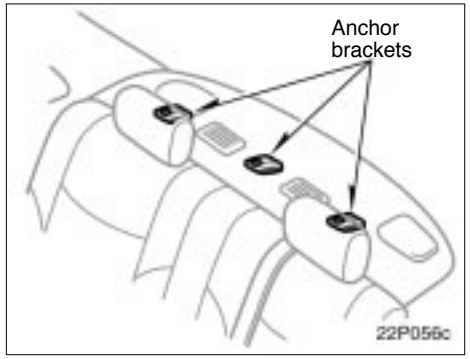

Use the anchor bracket on the package tray behind the rear seat to attach the top strap.

Anchor brackets are installed for each rear seating position.

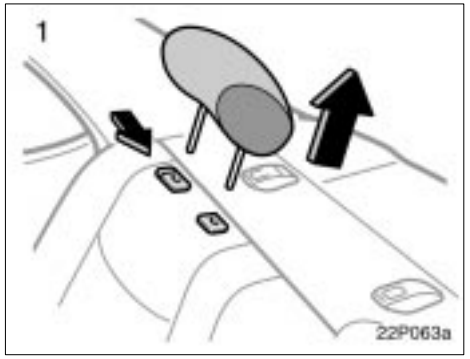

TO USE THE ANCHOR BRACKET:

1. **Outside anchor brackets only— Remove the head restraint.**

2. **Fix the child restraint system with the seat belt.**

   Latch the hook onto the anchor bracket and tighten the top strap.

For instructions to install the child restraint system, see “Child restraint—” on page 61 in this section.

⚠ CAUTION

Make sure the top strap is securely latched, and check that the child restraint system is secure by pushing and pulling it in different directions.

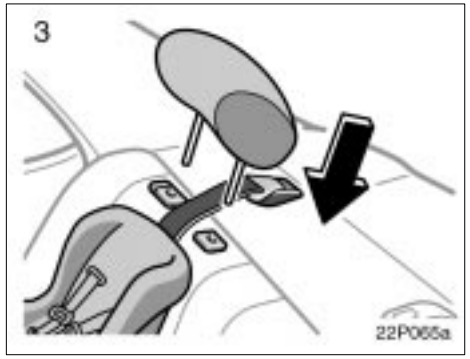

3. Outside anchor brackets only— Replace the head restraint.

—Installation with child restraint lower anchorages

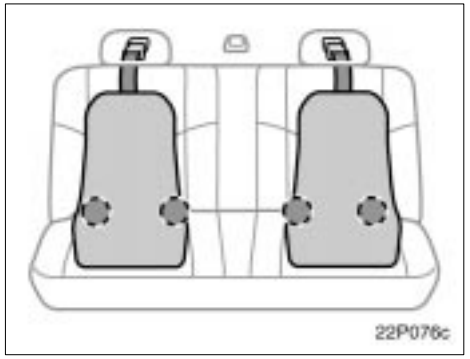

The lower anchorages for the child restraint system interfaced with the FMVSS225 specification are installed in the rear seat.

The anchorages are installed in the clearance between the seat cushion and seatback of both outside rear seats.

Child restraint system interfaced with the FMVSS225 specification can be fixed with these anchorages. In this case, it is not necessary to fix the child restraint system with a seat belt on the vehicle.

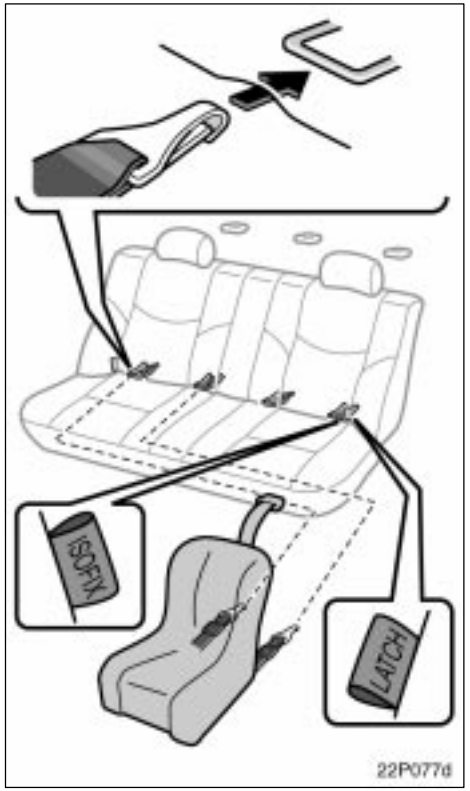

Type A

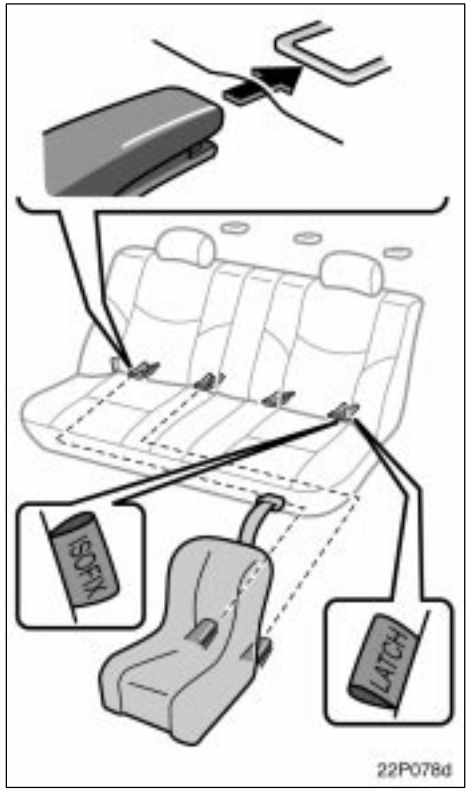

Type B

CHILD RESTRAINT SYSTEM INSTALLATION

Type A—

1. **Widen the clearance between the seat cushion and seatback a little and confirm the position of the lower anchorages below the tag in the seatback.**
2. **Latch the hooks of lower straps onto the anchorages and tighten the lower straps.**

Type B—

1. **Widen the clearance between the seat cushion and seatback a little and confirm the position of the lower anchorages below the tag in the seatback.**
2. **Latch the buckles onto the anchorages**

If your child restraint system has a top strap, it should be anchored. (For the installation of the top strap, see "—Using a top strap" on page 72 in this section.)

For the installation details, refer to the instruction manual equipped with each product.

⚠ CAUTION

- **When using the lower anchorages for the child restraint system, be sure that there are no irregular objects around the anchorages or that the seat belt is not caught.**
- **Push and pull the child restraint system in different directions to be sure it is secure. Follow all the installation instructions provided by its manufacturer.**
- **Do not put a child restraint system on the rear seat if it interferes with the lock mechanism of the front seats. This can cause death or severe injury to the child and front passenger in case of sudden braking or a collision.**

Tilt steering wheel

To change the steering wheel angle, hold the steering wheel, push down the lock release lever, tilt the steering wheel to the desired angle and push the lever up to lock the steering wheel in position.

⚠ CAUTION

- **Do not adjust the steering wheel while the vehicle is moving. Doing so may cause the driver to mishandle the vehicle and an accident may occur resulting in death or serious injuries.**
- **After adjusting the steering wheel, try moving it up and down to make sure it is locked in position.**

Outside rear view mirrors—

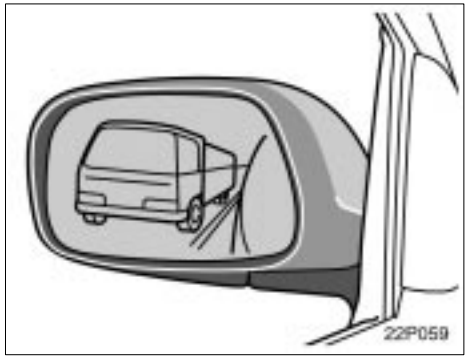

Adjust the mirror so that you can just see the side of your vehicle in the mirror.

Be careful when judging the size or distance of any object seen in the outside rear view mirror on the passenger's side. It is a convex mirror with a curved surface. Any object seen in a convex mirror will look smaller and farther away than when seen in a flat mirror.

⚠ CAUTION

Do not adjust the mirror while the vehicle is moving. Doing so may cause the driver to mishandle the vehicle and an accident may occur resulting in death or serious injuries.

—Power rear view mirror control

To adjust a mirror, use the switches.

1. Master switch—To select the mirror to be adjusted
   Push the switch at “L” (left) or “R” (right).
2. Control switch—To move the mirror
   Push the switch in the desired direction.

The mirrors can be adjusted when the key is in the “ACC” or “ON” position.

NOTICE

If ice should jam the mirror, do not operate the control or scrape the mirror face. Use a spray de–icer to free the mirror.

—Folding rear view mirrors

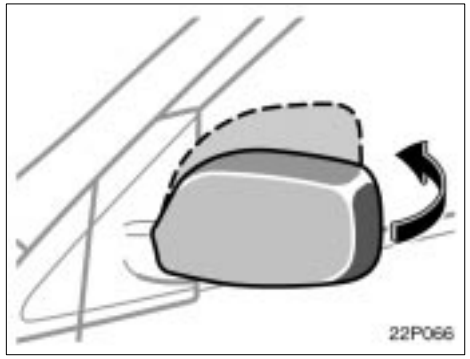

The rear view mirrors can be folded backward for parking in restricted areas.

To fold the rear view mirror, push backward.

⚠ CAUTION

Do not drive with the mirrors folded backward. Both the driver and passenger side rear view mirrors must be extended and properly adjusted before driving.

Anti–glare inside rear view mirror

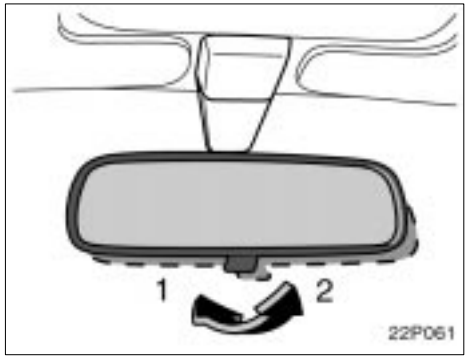

Adjust the mirror so that you can just see the rear of your vehicle in the mirror.

To reduce glare from headlights of the vehicle behind you during night driving, operate the lever on the lower edge of the mirror.

Daylight driving—Lever at position 1

The reflection in the mirror has greater clarity at this position.

Night driving—Lever at position 2

Remember that by reducing glare you also lose some rear view clarity.

⚠ CAUTION

Do not adjust the mirror while the vehicle is moving. Doing so may cause the driver to mishandle the vehicle and an accident may occur resulting in death or serious injuries.

Vanity mirror

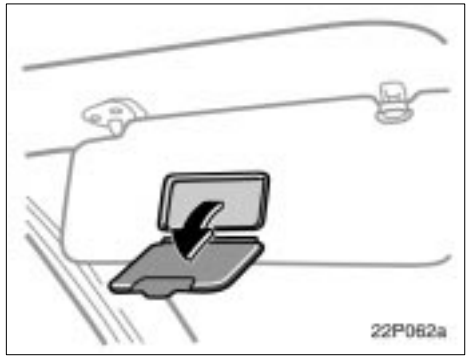

To use the vanity mirror, swing down the sun visor and open the cover.

SECTION 2– 3

OPERATION OF INSTRUMENTS AND CONTROLS

Lights, Wipers and Defogger

Headlights and turn signals 82
Emergency flasherss 83
Instrument panel light control 84
Interior light 84
Personal light 85
Windshield wipers and washer 85
Rear window defogger 86

Headlights and turn signals

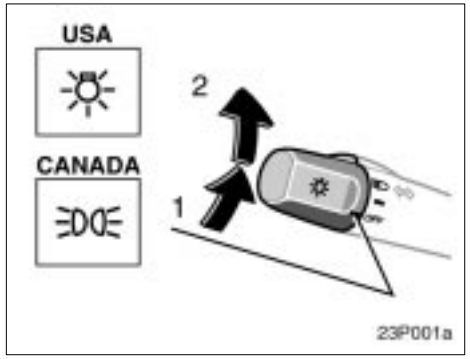

HEADLIGHTS

To turn on the following lights: Twist the headlight/turn signal lever knob.

Position 1—Parking, tail, license plate, side marker and instrument panel lights

Position 2—Headlights and all of the above

Vehicles sold in U.S.A.: When the headlights are on, the headlight indicator lights up in the instrument cluster.

Vehicles sold in Canada: When the tail lights are on, the tail light indicator lights up in the instrument cluster.

The lights automatically turn off when the driver's door is opened with the ignition turned off. To turn them on again, turn the key to the "ON" position or actuate the headlight switch. If you are going to park for over one week, make sure the headlight switch is off.

When the headlight switch is turned to the first or second clickstop, the brightness of the instrument cluster will be reduced slightly unless the instrument panel light control dial is turned fully on.

NOTICE
To prevent the battery from being discharged, do not leave the lights on longer than necessary when the hybrid system is not running.

Daytime running light system

The headlights turn on at reduced intensity when the parking brake is released with the hybrid system started, even with the light switch in the "OFF" position. They will not go off until the ignition switch is turned off.

To turn on the other exterior lights and instrument panel lights, twist the knob to the position 1.

Twist the knob to the position 2 to turn the headlights to full intensity for driving at night.

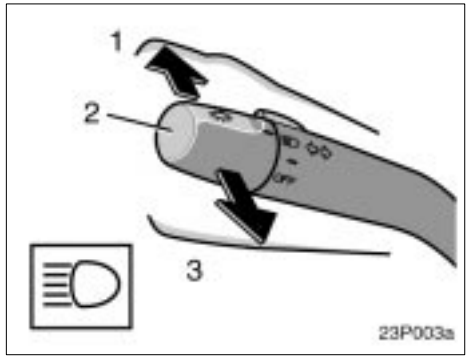

High–Low beams—For high beams, turn the headlights on and push the lever away from you (position 1). Pull the lever toward you (position 2) for low beams.

The headlight high beam indicator light (blue light) on the instrument panel will tell you that the high beams are on.

Flashing the high beam headlights (position 3)—Pull the lever all the way back. The high beam headlights turn off when you release the lever.

You can flash the high beam headlights even with the knob turned to “OFF”.

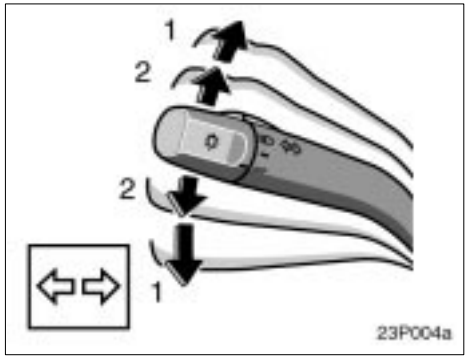

TURN SIGNALS

To signal a turn, push the headlight/turn signal lever up or down to position 1.

The key must be in the “ON” position.

The lever automatically returns after you make a turn, but you may have to return it by hand after you change lanes.

To signal a lane change, move the lever up or down to the pressure point (position 2) and hold it.

If the turn signal indicator lights (green lights) on the instrument panel flash faster than normal, a front or rear turn signal bulb is burned out. See “Replacing light bulbs—” on page 225 in Section 8–3.

Emergency flashers

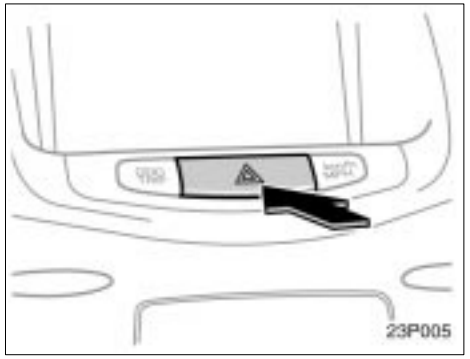

To turn on the emergency flashers, push the switch.

All the turn signal lights will flash. To turn them off, push the switch once again.

Turn on the emergency flashers to warn other drivers if your vehicle must be stopped where it might be a traffic hazard.

Always pull as far off the road as possible.

The turn signal light switch will not work when the emergency flashers are operating.

NOTICE
To prevent the battery from being discharged, do not leave the switch on longer than necessary when the hybrid system is not running.

Instrument panel light control

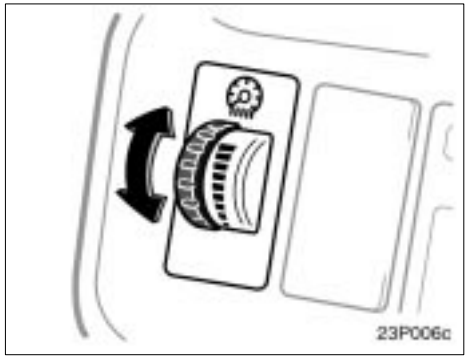

To adjust the brightness of the instrument panel lights, turn the dial.

When the headlight switch is turned to the first or second clickstop, the brightness of the instrument cluster will be reduced slightly unless the instrument panel light control dial is turned fully on.

Interior light

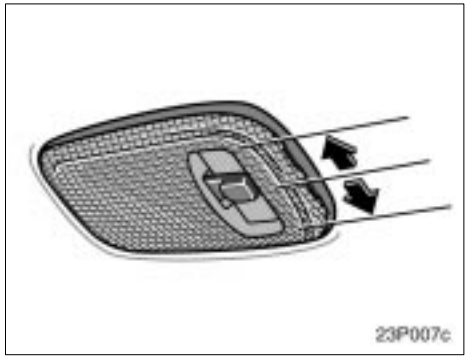

To turn on the interior light, slide the switch.

The interior light switch has the following positions:

”ON”—Keeps the light on all the time.

”OFF”—Turns the light off.

”DOOR”—Turns the light on when any of the door is opened. The light remains on for 15 seconds when all the doors are closed.

ILLUMINATED ENTRY SYSTEM

With the switch in “DOOR” position, the light comes on when either door is opened. After all the doors are closed, the light remains on for about 15 seconds and then fades out.

However, in the following cases, the light goes off immediately.

- All the doors are closed when the ignition key is in “ACC” or “ON” position.
- All the doors are closed and locked.

When all the doors are unlocked with a key or wireless remote control simultaneously, the light comes on for about 15 seconds and then fade out, even if the door is not opened.

Personal light

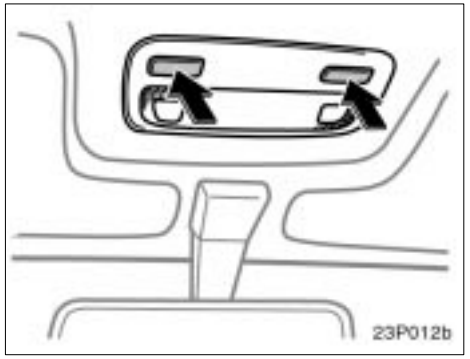

To turn on the personal light, push the switch. To turn it off, push the switch again.

Windshield wipers and washer

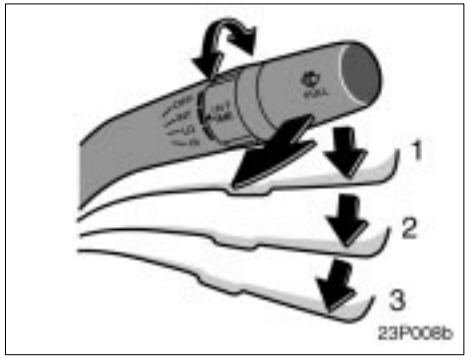

To turn on the windshield wipers, move the lever to the desired setting.

The key must be in the “ON” position.

Lever position	Speed setting
Position 1	Intermittent
Position 2	Slow
Position 3	Fast

The “INT TIME” band lets you adjust the wiping time interval when the wiper lever is in the intermittent position (position 1). Twist the band upward to increase the time between sweeps, and downward to decrease it.

To squirt washer fluid, pull the lever toward you and release it.

If the windshield wipers are off, they will operate a couple of times after the washer squirts.

For instructions on adding washer fluid, see “Adding washer fluid” on page 225 in Section 8–3.

In freezing weather, warm the windshield with the defroster before using the washer. This will help prevent the washer fluid from freezing on your windshield, which can block your vision.

NOTICE
Do not operate the wipers if the windshield is dry. It may scratch the glass.

Rear window defogger

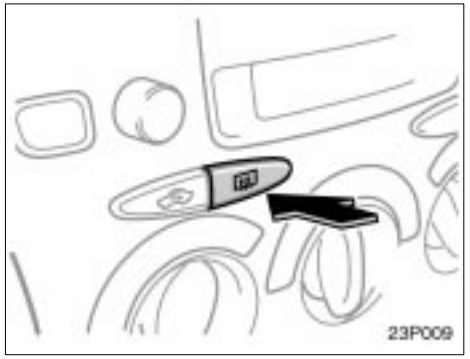

To defog or defrost the rear window, push the switch.

The key must be in the “ON” position.

The thin heater wires on the inside of the rear window will quickly clear the surface. An indicator light will illuminate to indicate the defogger is operating.

Push the switch once again to turn the defogger off.

The system will automatically shut off after the defogger has operated about 15 minutes.

Make sure you turn the defogger off when the window is clear. Leaving the defogger on for a long time could cause the auxiliary battery to discharge. The defogger is not designed for drying rain water or for melting snow.

NOTICE
When cleaning the inside of the rear window, be careful not to scratch or damage the heater wires or connectors.

SECTION 2– 4

OPERATION OF INSTRUMENTS AND CONTROLS

Gauges, Meters and Service reminder indicators

Fuel gauge 88
Coolant temperature indicator and warning lightt 89
Odometer and two trip meters 90
Switching km/h MPH button 91
Service reminder indicators and warning buzzers 91

Fuel gauge

The gauge works when the ignition switch is on and indicates the approximate quantity of fuel remaining in the tank.

Nearly full–Indicator at “F”
Nearly empty–Indicator at “E”

It is a good idea to keep the tank over 1/4 full.

When you refuel on the slope, the indicator may not show the correct level.

When you refuel less than about 11.4 L (3.0 gal., 2.5 Imp. gal.), the fuel indicator may not change.

After the auxiliary battery is reconnected, one segment will flash for a while.

Depending on the ambient temperature, the fuel quantity is less than 45 L (11.9 gal., 9.9 Imp. gal.) even at “F”. However, this does not affect the fuel consumption and the remaining fuel ratio indicated on the gauge. (For details, see “Fuel” on page 146 in Section 3.)

Low fuel level indicator light

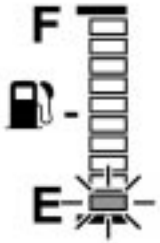

If the fuel level approaches “E” or the low fuel level indicator light blinks, fill the fuel tank as soon as possible.

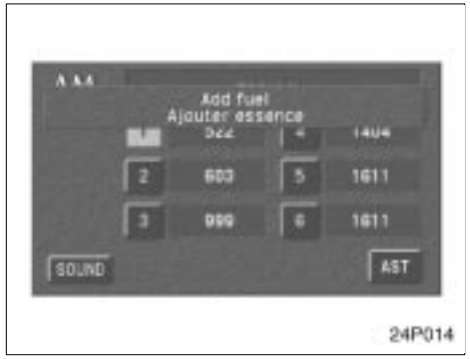

At the first blinking of the light, the master warning light in the instrument cluster comes on and the message appears on the multi–information display to remind the driver to fill fuel.

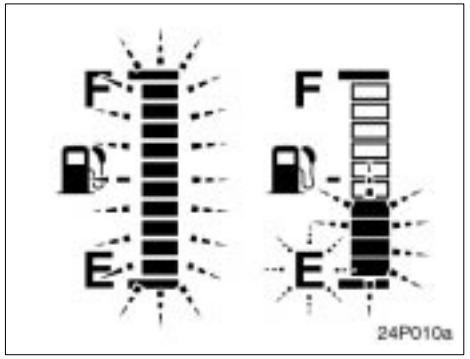

The fuel system malfunctions in the following cases, so contact your Toyota dealer.

- **All the segments blink.**
- **The "E" mark and the segments indicating remaining fuel blink.**

Coolant temperature indicator and warning lights

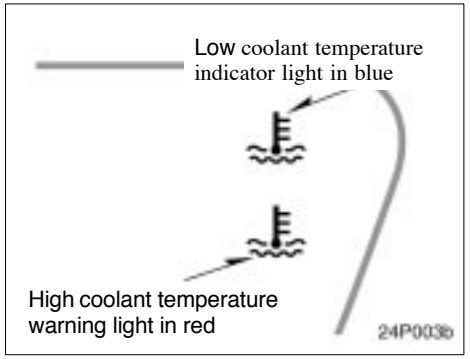

The indicator and warning lights indicate the coolant temperature when the ignition switch is on. The hybrid system operating temperature will vary with changes in weather and hybrid system load.

The red high coolant temperature warning light will come on when the ignition key is turned to the "ON" position. After a few seconds, the light will go off.

If your coolant temperature is cool with the ignition switch on, the blue low coolant temperature indicator light comes on. If it keeps lighting on with the hybrid system fully warmed, contact your Toyota dealer as soon as possible to service the vehicle.

If the red high coolant temperature warning light comes on, your hybrid system is too hot. If your vehicle overheats, stop your vehicle and allow the hybrid system to cool.

Your vehicle may overheat during severe operating conditions, such as:

- Driving up a long hill on a hot day.
- Reducing speed or stopping after high speed driving.

NOTICE

- ***Do not remove the thermostat in the cooling system as this may cause the hybrid system to overheat. The thermostat is designed to control the flow of coolant to keep the temperature of the hybrid system within the specified operating range.***
- ***Do not continue driving with an overheated hybrid system. See "If your vehicle overheats" on page 172 in Section 5.***

Odometer and two trip meters

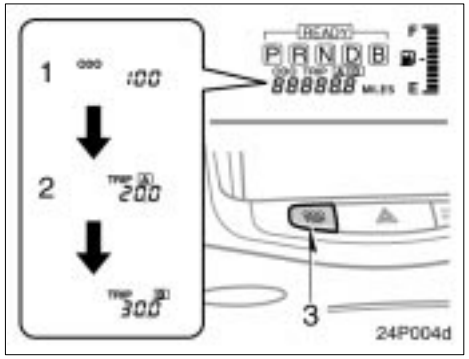

This meter displays the odometer and two trip meters.

1. Odometer—Shows the total distance the vehicle has been driven.
2. Two trip meters—Show two different distances independently driven since the last time each trip meter was set to zero.

   You can use one trip meter to calculate the fuel economy and the other to measure the distance on each trip. All trip meter data is cancelled if the electrical power source is disconnected.
3. Trip meter reset button—Resets the two trip meters to zero, and also change the meter display.

To change the meter display, quickly push and release the button. The meter display changes in the order from the odometer to trip meter A to trip meter B, then back to the odometer each time you push.

To reset the trip meter A to zero, display the meter A reading, then push and hold the button until the meter is set to zero. The same process can be applied for resetting the trip meter B.

Switching km/h MPH button

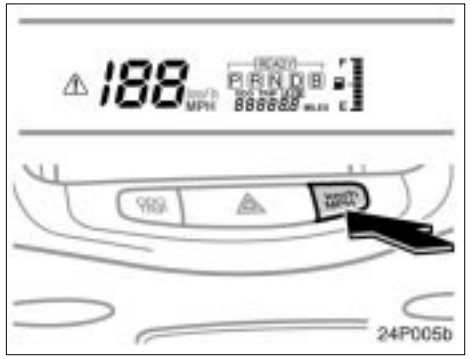

You can switch the display between km/h and MPH by pressing the button.

Service reminder indicators and warning buzzers— —Instrument cluster

If the indicator or buzzer comes on ...	Do this.
(a) BRAKE or (Indicator and buzzer)	If parking brake is off, stop immediately and contact Toyota dealer.
(b) (Indicator and buzzer)	Fasten driver's seat belts.
(c) PASSENGER	Fasten front passenger's seat belt.
(d)	Take vehicle to Toyota dealer.
(e) CHECK	Take vehicle to Toyota dealer.

If the indicator or buzzer comes on ...	Do this.
(f)	See multi–information display.
(g)	Drive without hard acceleration.
(h)	Stop and check.
(i) ABS or	Take vehicle to Toyota dealer. If brake system warning light is also on, stop immediately and contact Toyota dealer.
(j)	Take vehicle to Toyota dealer immediately.

If the indicator or buzzer comes on ...		Do this.
(k)		Close all doors.
(l)		Fill up tank.
(m)		Stop and check.
	(in red)	
(n)	Key reminder buzzer	Remove key.
(o)	Shift position reminder buzzer	Put the selector lever . in “P” position.

(a) Brake System Warning Light and Buzzer

This light comes on in the following cases when the ignition key is in the “ON” position.

- **When the parking brake is applied...**

This light comes on for a few seconds when the ignition key is turned to the “ON” position even after the parking brake is released.

- **When the brake fluid level is low...**

CAUTION

It is dangerous to continue driving normally when the brake fluid level is low.

- **When the regenerative brake system is fails...**
- **When the hydraulic brake booster fails...**

If the hydraulic booster causes a problem resulting in poor braking performance, the warning light comes on and buzzer sounds continuously.

Have your vehicle checked at your Toyota dealer in the following cases:

- The light does not come on even if the parking brake is applied when the ignition key is in the “ON” position.
- The light does not come on even if the ignition key is turned on with the parking brake released.

A warning light turning on briefly during operation does not indicate a problem.

CAUTION

If any of the following conditions occurs, immediately stop your vehicle at a safe place and contact your Toyota dealer.

- **The light does not turn off even after the parking brake is released while the hybrid system is running.**
- **The warning buzzer comes on together with the warning light.**

In either case, this can indicate that the brakes may not work properly and your stopping distance will become longer. Depress the brake pedal firmly and bring the vehicle to an immediate stop.

- **The brake system warning light remains on together with the "ABS" warning light.**

In this case, not only the anti–lock brake system will fail but also the vehicle will become extremely unstable during braking.

Any of the following conditions may occur, but do not indicate the malfunction:

- The light may stay on for about 60 seconds after the ignition key is turned to the "ON" position. It is normal if it turns off after a while.
- Depressing the brake pedal repeatedly may turn on the warning light and buzzer. It is normal if the light turns off and the buzzer stops sounding after a few seconds.
- You may hear a small sound in the engine compartment after the hybrid system is started or the brake pedal is depressed repeatedly. This is a pump pulsating sound of the brake system, and it is not a malfunction.

(b) Driver's Seat Belt Reminder Light and Buzzer

This light and buzzer remind you to buckle up the driver's seat belt.

Once the ignition key is turned to "ON" or "START", the reminder light flashes and the buzzer sounds if the driver's seat belt is not fastened. Unless the driver fastens the belt, the light keeps on flashing and the buzzer sounds 4 to 8 seconds.

(c) Front Passenger's Seat Belt Reminder Light

This light reminds you to buckle up the front passenger's seat belt.

Once the ignition key is turned to "ON" or "START", the reminder light flashes if a passenger sits in the front passenger seat and does not fasten the seat belt. Unless the front passenger fastens the belt, the light stays flashing.

If luggage load is placed on the front passenger seat, depending on its weight and how it is placed on the seat, built–in sensors in the seat cushion may detect the pressure, causing the reminder light to come on.

(d) Discharge Warning Light

This light warns that the auxiliary battery is being discharged.

If it comes on while you are driving, there is a problem somewhere in the charging system.

The hybrid system will continue to operate, however, until the auxiliary battery is discharged. Turn off the air conditioning, blower, radio, etc., and drive directly to the nearest Toyota dealer or repair shop.

(e) Malfunction Indicator Lamp

This lamp comes on when the ignition key is turned to the "ON" position and goes off after the engine starts. This means that the warning light system is operating properly.

If the lamp remains on or the lamp comes on while driving, first check the following:

- Empty fuel tank

  If the fuel tank is empty, refuel immediately.

This case is a temporary malfunction. The malfunction indicator lamp will go off after taking several driving trips.

If the lamp will not go off even after several trips, contact your Toyota dealer as soon as possible.

- There is a problem somewhere in the hybrid system or warning light system itself.

Contact your Toyota dealer as soon as possible to service the vehicle.

Emissions inspection and maintenance (I/M) programs

Your vehicle may not pass a state emission inspection if the malfunction indicator lamp remains on. Contact your Toyota dealer to check your vehicle's emission control system and OBD (On–Board Diagnostics) system before taking your vehicle for the inspection.

For details, see "Emissions inspection and maintenance (I/M) programs" on page 198 in Section 7.

(f) Master Warning Light ( )

If the master warning light comes on, the warning light for the faulty system is highlighted or the message such as "When you park your car, make sure you shift to Park P." and "The batteries will not charge if the shifter is in N" appears on the multi–information display. (See "Service reminder indicators and warning buzzers——Multi–information display" on page 97 in this section or "Precautions for use" on page 12 in Section 1–2 or "Fuel gauge" on page 88 in Section 2–4 for instructions.)

(g) Output Control Warning Light ( )

This light comes on when the ignition switch is on. It goes off when the electric motor is ready to run.

The warning light comes on when the hybrid vehicle battery temperature is low or high, or the hybrid vehicle battery capacity is decreased with the selector lever at "R" during driving. If the light comes on, the power will be limited. Drive your vehicle without hard acceleration.

(h) Low Engine Oil Pressure Warning Light

This light warns that the engine oil pressure is too low.

If it flickers or stays on while you are driving, pull off the road to a safe place and stop the engine immediately. Call a Toyota dealer or qualified repair shop for assistance.

The light may occasionally flicker when the engine is idling or it may come on briefly after a hard stop. There is no cause for concern if it then goes out when the engine is accelerated slightly.

The light may come on when the oil level is extremely low. It is not designed to indicate low oil level, and the oil level must be checked using the level dipstick.

NOTICE

Do not drive the vehicle with the warning light on—even for one block. It may ruin the engine.

(i) "ABS" Warning Light

The light comes on when the ignition key is turned to the "ON" position. If the anti–lock brake system works properly, the light turns off after a few seconds. Thereafter if the system malfunctions, the light comes on again.

When the "ABS" warning light is on (and the brake system warning light is off), the anti–lock brake system does not operate, but the brake system still operates conventionally.

When the "ABS" warning light is on (and the brake system warning light is off), the anti–lock brake system does not operate so that the wheels could lock up during a sudden braking or braking on slippery road surfaces.

If either of the following conditions occurs, this indicates a malfunction somewhere in the parts monitored by the warning light system. Contact your Toyota dealer as soon as possible so service the vehicle.

- The light does not come on when the ignition key is turned to the "ON" position, or remains on.
- The light comes on while you are driving.

A warning light turning on briefly during operation does not indicate a problem.

⚠ CAUTION

If the "ABS" warning light remains on together with the brake system warning light, immediately stop your vehicle at a safe place and contact your Toyota dealer.

In this case, not only the anti–lock brake system will fail but also the vehicle will become extremely unstable during braking.

Either of the following conditions may occur, but does not indicate the malfunction:

- The light may stay on for about 60 seconds after the ignition key is turned to the "ON" position. It is normal if it turns off after a while.
- Depressing the brake pedal repeatedly may turn on the light. It is normal if it turns off after a few seconds.

(j) SRS Warning Light

This light will come on when the ignition key is turned to the "ACC" or "ON" position. After about 6 seconds, the light will go off. This means the system of the airbag and front seat belt pretensioners are operating properly.

The warning light system monitors the airbag sensor assembly, front airbag sensors, side airbag sensors, front seat belt pretensioner assemblies, warning light, interconnecting wiring and power sources.

If either of the following conditions occurs, this indicates a malfunction somewhere in the parts monitored by the warning light system. Contact your Toyota dealer as soon as possible to service the vehicle.

- The light does not come on when the ignition key is turn to the "ACC" or "ON" position or remains on.
- The light comes on or flashes while driving.

(k) Open Door Warning Light

This light remains on until all the doors are completely closed.

(l) Low Fuel Level Indicator Light

This light blinks when the fuel level in the tank becomes nearly empty. Fill up the tank as soon as possible.

At the first blinking of the light, the message appears on the display to remind the driver to fill fuel.

Contact your Toyota dealer in the following cases:

- **All the segments blink.**
- **The "E" mark and the segments indicating remaining fuel blink.**

(m) High Coolant Temperature Warning Light

The light operates to warn that the hybrid system is almost overheating.

The light will come on when the ignition key is turned to the "ON" position. After a few seconds, the light will go off.

If it comes on while you are driving, stop the vehicle and check your hybrid system. For detailed instructions, see "If your vehicle overheats" on page 172 in Section 5.

NOTICE

Continued driving with the light on could result in the overheating of hybrid system.

(n) Key Reminder Buzzer

This buzzer reminds you to remove the key when you open the driver's door with the ignition key in the "ACC" or "LOCK" position.

(o) Shift position reminder buzzer

This buzzer will sound if the driver's door is opened in the following conditions:

- The hybrid system is on.
- The parking brake is applied.
- The selector lever is in a position other than "P".

CHECKING SERVICE REMINDER INDICATORS (except the low fuel level indicator light)

1. Apply the parking brake.
2. Open one of the doors.
   The open door warning light should come on.
3. Close the door.
   The open door warning light should go off.
4. Turn the ignition key to "ACC".
   The SRS warning light should come on. It goes off after about 6 seconds.
5. Turn the ignition key to "START". At this time, all the bulbs are checked in self–diagnosis mode.
   All the service reminder indicators except the open door warning light and SRS warning light should come on. The "ABS" warning light goes off after a few seconds.

There may be the case that the “ABS” warning light stays on for about 60 seconds after the ignition key is turned to the “ON” position. It is normal if it goes out after a while.

If any service reminder indicator or warning buzzer does not function as described above, have it checked by your Toyota dealer as soon as possible.

—Multi–information display

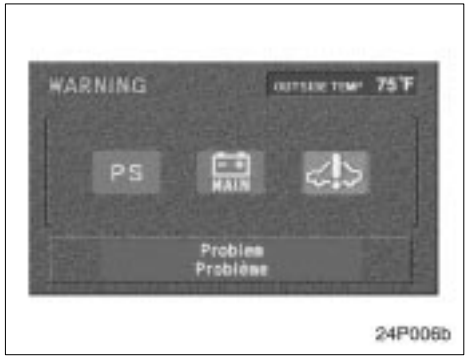

If an error occurs in the system, the warning display screen appears.

The warning light for the faulty system blinks for about 5 seconds and remains on until the cause of an error is removed.

When you push other mode switch, the screen changes.

For details on the warning display and how to remedy the system, see the description on the following pages.

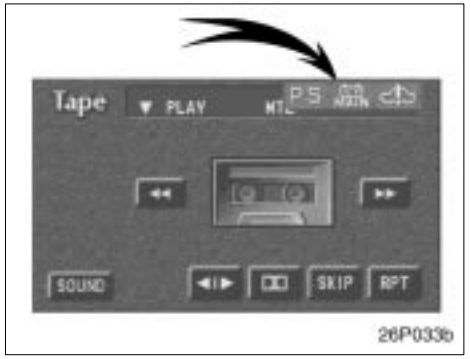

When you change the warning display screen to other, the small warning icon is shown at the upper right of the screen.

If the indicator comes on ...		Do this.
(a)	PS	Take vehicle to Toyota dealer.
(b)	MAIN	Stop and check.
(c)		Take vehicle to Toyota dealer.

(a) Power Steering System Warning Light

This light comes on when the power steering control system fails.

If the vehicle starts moving on the decline before the ignition is turned on, turning the ignition switch to “ON” will light up this light. At this time, you may feel the steering wheel heavy.

If this occurs, stop your vehicle completely, turn the ignition switch to “ACC” or “LOCK” and start the hybrid system again.

CAUTION

If this light comes on, take your vehicle to the Toyota dealer as soon as possible. In this case, you may feel the heavy steering wheel maneuvering. Drive your vehicle while gripping the steering wheel firmly.

(b) Hybrid Vehicle Battery Warning Light

This light comes on in the following cases.

a. The hybrid vehicle battery voltage drops with the running mode selector lever left in “N” position.

The system works properly if you put the running mode selector lever to “P” position and the light goes off.

b. The fuel tank is completely empty. (See “Fuel gauge” in this section for instructions.)

c. The hybrid vehicle battery is discharged.

If this light comes on with the “READY” light on in case of c., stop your vehicle in a safe place and contact your Toyota dealer.

(c) Hybrid System Warning Light ( )

This light comes on if there is a problem in the electric motor, inverter unit, hybrid vehicle battery, etc.

If this light is on, stop your vehicle in a safe place immediately and contact your Toyota dealer.

Even if the hybrid system warning light comes on, you could increase the speed a little temporarily by depressing the accelerator pedal. Immediately pull up your vehicle at a safe place and contact your Toyota dealer.

SECTION 2– 5

OPERATION OF INSTRUMENTS AND CONTROLS

Ignition switch, Transmission and Parking brake

Ignition switch with steering lock 102
Hybrid transaxlee 103
Parking brake 106
Cruise controls 107

Ignition switch with steering lock

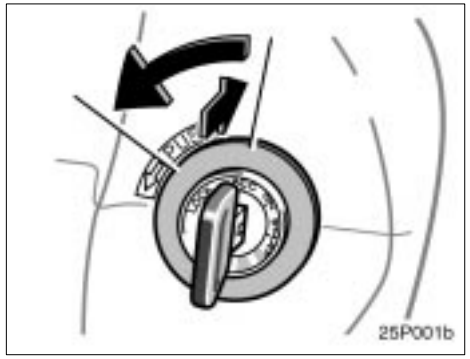

"START"—The hybrid system is ready to operate.

Turn the key to the "START" position and hold the ignition switch at this position for about a few seconds until the "READY" light comes on and a beep sounds. (If the ambient temperature is low such as during winter conditions, it may take time until the "READY" light is on." The key will return to the "ON" position when released.

Being different from ordinary vehicles, you cannot start your vehicle with the running mode selector lever in "N" position.

"ON"—The hybrid system starts to run when the accelerator pedal is depressed with the "READY" light and all accessories on.

This is the normal driving position.

"ACC"—Accessories such as the radio operate, but the hybrid system is off.

If you leave your key in the "ACC" position for a while, put the running mode selector lever in "P" position.

If you leave the key in the "ACC" or "LOCK" position and open the driver's door, a buzzer will remind you to remove the key.

"LOCK"—The hybrid system is off and the steering wheel is locked. The key can be removed only at this position.

You must push in the key to turn it from "ACC" to the "LOCK" position. The selector lever must be put in the "P" position before pushing the key.

Vehicles with hybrid vehicle immobiliser system–Once you remove the key, the hybrid vehicle immobiliser system is automatically set. (See "Hybrid vehicle immobiliser system" on page 20 in Section 2–1.)

When starting the hybrid system, the key may seem stuck at the "LOCK" position. To free it, first be sure the key is pushed all the way in, and then rock the steering wheel slightly while turning the key gently.

NOTICE
Do not leave the key in the "ACC" or "ON" position for a long time when the hybrid system is off. The auxiliary battery will discharge.

Hybrid transaxle

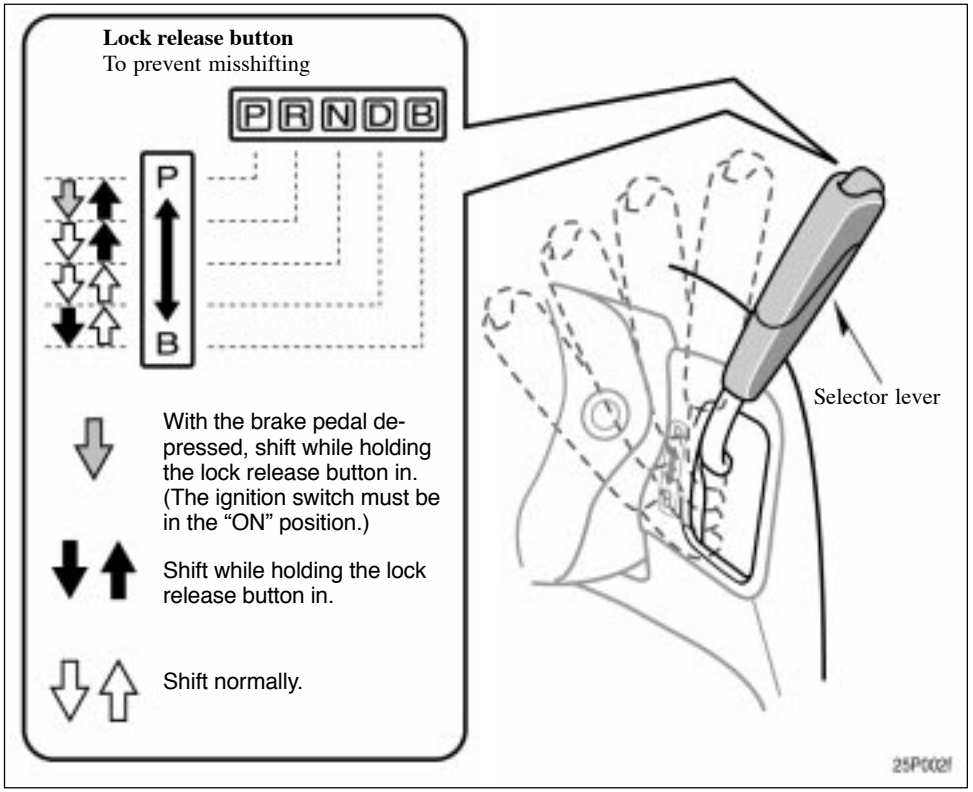

Your hybrid transaxle has a shift lock system to minimize the possibility of incorrect operation. This means you can only shift out of "P" position when the brake pedal is depressed (with the ignition switch in "ON" position and the lock release button depressed).

(a) Selector lever

The shift position is also displayed on the instrument cluster.

P: Parking, hybrid system starting and key removal position

R: Reverse position

N: Neutral position

D: Normal driving position

B: Engine braking position

When the cruise control is being used even if you shift the selector lever to "B" position, engine braking will not be applied because the cruise control is not cancelled. For ways to decrease the vehicle speed, see "Cruise control" on page 107.

(b) Normal driving

1. Start the hybrid system as instructed in ”How to start the hybrid system” on page 162 in Section 4. The transmission must be in ”P”.
2. With your foot holding down the brake pedal, shift the selector lever to ”D”.

⚠ CAUTION

Never put your foot on the accelerator pedal while shifting.

3. Release the parking brake and brake pedal. Depress the accelerator pedal slowly for smooth starting.

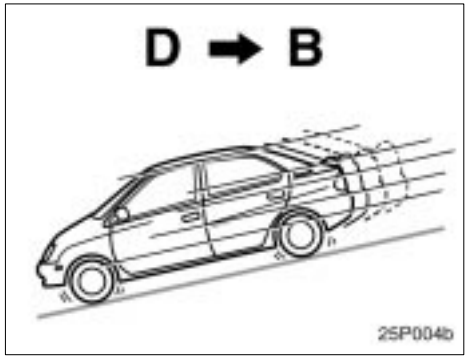

(c) Using engine braking

To use engine braking, shift the selector lever to “B” position.

During high speed driving, you may feel that deceleration by engine braking is smaller than that of ordinary vehicle.

Do not continue normal driving with the selector lever in “B” position for a long time. This may cause decreased fuel economy. To prevent this, use “D” position for normal driving.

⚠ CAUTION

Be careful when downshifting on a slippery surface. Abrupt shifting could cause the vehicle to spin or skid.

(d) Backing up

1. Bring the vehicle to a complete stop.
2. With the brake pedal held down with your foot, shift the selector lever to the “R” position.

NOTICE

Never shift into reverse while the vehicle is moving.

(e) Parking

1. Bring the vehicle to a complete stop.
2. With the brake pedal pressed down, fully depress the parking brake pedal to apply the parking brake securely.
3. With the brake pedal pressed down, shift the selector lever to the “P” position.

If the driver's door is opened when the the "READY" light is on and the the selector lever is at a position other than "P" with the parking brake applied, you will hear beeps to warn you to shift the selector lever to the "P" position.

⚠ CAUTION

While the vehicle is moving, never attempt to move the running mode selector lever into "P" position under any circumstances. Serious mechanical damage and loss of vehicle control may result.

NOTICE

Be sure to put the selector lever in "P" position when parking. With the selector lever in "N" position, the hybrid vehicle battery will not be charged even the gasoline engine operates. You cannot start your vehicle if the selector lever is left in "N" position for a long time because the hybrid vehicle battery will discharge.

(f) Vehicle driving characteristics

Creeping

In order to hold the vehicle properly on an incline and for better accelerator pedal operation at starting, vehicle is designed like an ordinary automatic transmission vehicle which tends to move without depressing the accelerator pedal with the selector lever in a position other than "P" or "N".

With the selector lever in a position other than "P" or "N", depress the brake pedal firmly even when stopped and apply the parking brake as required.

When moving in a restricted area or during traffic jam, it is an effective way to control the speed using only the brake pedal operation without depressing the accelerator pedal.

Regenerative brake

When the accelerator pedal is released or the brake pedal is depressed, the electric motor acts as a generator and converts kinetic energy to electric energy to provide deceleration and recover the electric energy to charge the hybrid vehicle battery.

At this time, the electric motor running noise becomes larger.

The operation is the same as an ordinary gasoline powered vehicle.

You may experience the following conditions while braking. As they do not indicate the malfunction, perform braking as usual:

- When you turn the ignition switch to "ON" with the brake pedal depressed, you may feel a little push from the brake pedal.
- When you turn the ignition switch to "ACC" or "LOCK" from "ON", the brake pedal may move a little.

Hybrid driving

This vehicle runs in combination with the gasoline engine and electric motor.

If the “READY” light is on, you can start your vehicle even with the gasoline engine stopped.

When the hybrid vehicle battery temperature is low or high, or the hybrid vehicle battery capacity is decreased with the running mode selector lever at “R” during driving, the output control warning light is on and the output power may be limited.

If the output control warning light is on, drive your vehicle without hard acceleration. The output power will be limited particularly when backing up.

(g) If you cannot shift lever out of “P” position

If you cannot shift the selector lever from the “P” position even though the brake pedal is depressed, use the shift lock override button. For instructions, see “If you cannot shift running mode selector lever” on page 182 in Section 5.

Parking brake

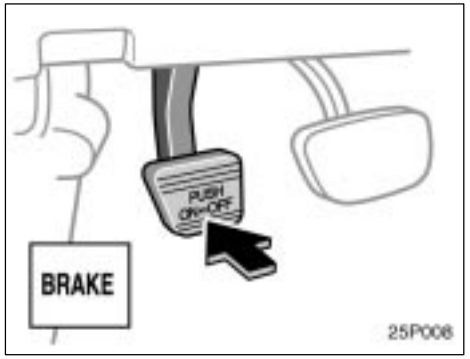

Vehicles sold in U.S.A.

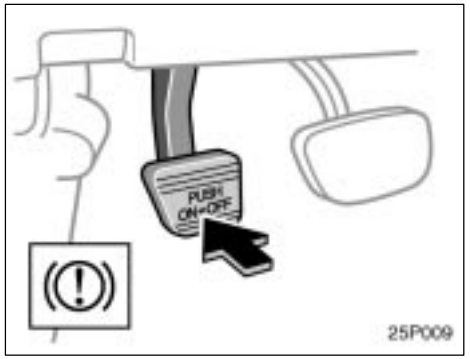

Vehicles sold in Canada

When parking, firmly apply the parking brake to avoid inadvertent creeping.

To set: Fully depress the parking brake pedal. For better holding power, first depress the brake pedal and hold it while setting the parking brake.

To release: Depress the parking brake pedal while depressing the brake pedal.

To remind you that the parking brake is set, the parking brake reminder light in the instrument panel remains on until you release the parking brake.

⚠ CAUTION

- **Driving with the parking brake engaged can reduce braking power.**
- **Before driving, be sure the parking brake is fully released and the parking brake reminder light is off.**

Cruise control

The cruise control allows you to cruise the vehicle at a desired speed over 40 km/h (25 mph) even with your foot off the accelerator pedal.

Your cruising speed can be maintained up or down grades within the limits of hybrid system performance, although a slight speed change may occur when driving up or down the grades. On steeper hills, a greater speed change will occur so it is better to drive without the cruise control.

⚠ CAUTION

- **To help maintain maximum control of your vehicle, do not use the cruise control when driving in heavy or varying traffic, or on slippery (rainy, icy or snow–covered) or winding roads.**
- **Avoid vehicle speed increases when driving downhill. If the vehicle speed is too fast in relation to the cruise control set speed, cancel the cruise control then shift the selector lever to "B" position to use engine braking to slow down.**

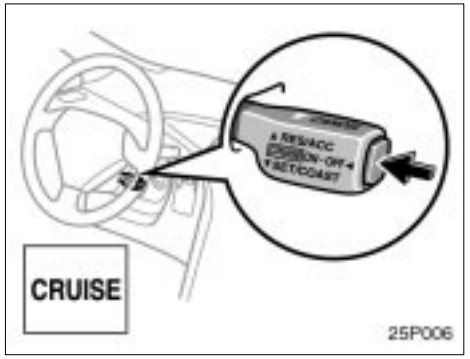

TURNING ON THE SYSTEM

To operate the cruise control, push the "CRUISE ON·OFF" switch. This turns the system on. The indicator light in the instrument panel shows that you can now set the vehicle at a desired cruising speed. Another push on the switch will turn the system completely off.

⚠ CAUTION

To avoid accidental cruise control engagement, keep the "CRUISE ON·OFF" switch off when not using the cruise control.

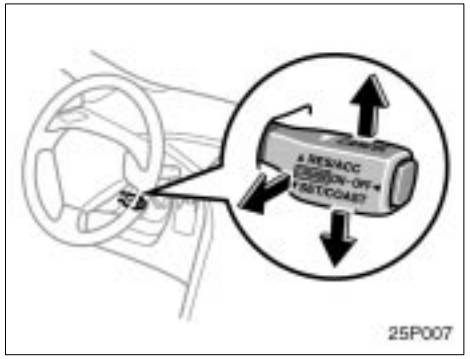

SETTING AT A DESIRED SPEED

The transmission must be in "D" or "B" before you set the cruise control speed.

Bring your vehicle to the desired speed, push the lever down in the "SET/COAST" direction and release it. This sets the vehicle at that speed.

If the speed is not satisfactory, tap the lever up for a faster speed, or tap it down for a slower speed. Each tap changes the set speed by 1.6 km/h (1.0 mph). You can now take your foot off the accelerator pedal.

If you need acceleration—for example, when passing—depress the accelerator pedal enough for the vehicle to exceed the set speed. When you release it, the vehicle will return to the speed set prior to the acceleration.

CANCELLING THE PRESET SPEED

You can cancel the preset speed by:

a. Pulling the control lever in the ”CANCEL” direction and releasing it.

b. Depressing the brake pedal.

If the vehicle speed falls below about 40 km/h (25 mph), the preset speed will automatically cancel out.

If the vehicle speed drops 16 km/h (10 mph) below the preset speed, the preset speed will also automatically cancel out.

If the preset speed automatically cancels out other than for the above cases, have your vehicle checked by your Toyota dealer at the earliest opportunity.

RESETTING TO A FASTER SPEED

Push the lever up in the ”RES/ACC” direction and hold it. Release the lever when the desired speed is attained. While the lever is held up, the vehicle will gradually gain speed.

However, a faster way to reset is to accelerate the vehicle and then push the control lever down in the ”SET/COAST” direction.

RESETTING TO A SLOWER SPEED

Push the lever down in the ”SET/COAST” direction and hold it. Release the lever when the desired speed is attained. While the lever is held down, the vehicle speed will gradually decrease.

However, a faster way to reset is to depress the brake pedal and then push the control lever down in the ”SET/COAST” direction.

RESUMING THE PRESET SPEED

If the preset speed is cancelled by pulling the control lever or by depressing the brake pedal, pushing the lever up in the ”RES/ACC” direction will restore the speed set prior to cancellation.

However, once the vehicle speed falls below about 40 km/h (25 mph), the preset speed will not be resumed.

CRUISE CONTROL FAILURE WARNING

If the ”CRUISE” indicator light in the instrument cluster flashes when using the cruise control, press the ”CRUISE ON·OFF” button to turn the system off and then press it again to turn it on.

If any of the following conditions then occurs, there is some trouble in the cruise control system.

- The indicator light does not come on.
- The indicator light flashes again.
- The indicator light goes out after it comes on.

If this is the case, contact your Toyota dealer and have your vehicle inspected.

SECTION 2– 6

OPERATION OF INSTRUMENTS AND CONTROLS

Multi–information display

Reference 110
Before using the multi–information displayy 111
Switch operation 111
Functions 112
Information 113
Adjustment 115
Outside temperature display 116

Reference

1. Multi–information display
   (See page 111 for details.)
2. “DISPLAY” button
   The display adjustment screen is shown.
   (See page 115 for details.)
3. “INFO” button
   The information menu screen is shown.
   (See page 113 for details.)
4. “AUDIO” button
   The audio operation screen is shown.
   (See page 118 for details.)

The “MAP”, “DEST” and “MENU” switches are provided for the exclusive use of Navigation System. On vehicles without Navigation System, those switches do not work even if pushed.

Before using the multi–information display

26P049

Operate the multi–information display with the ignition switch on.

When the ignition switch is turned to “ON”, the initial “TOYOTA” screen appears and the system begins operating.

After a few seconds, the previous mode display will appear.

If the electrical power source has been disconnected from the multi–information display, the display will be automatically set to the initial mode.

⚠ CAUTION

Do not adjust the display while the vehicle is moving. Be sure to adjust the display only when the vehicle is stopped.

Switch operation

This system operates mainly by the switches on the screen. To protect the screen, lightly touch switches on the screen with your finger. When you touch a switch on the screen or on the bezel, a beep sounds.

- If the system does not respond to a touch of a switch, move your finger away from the screen and then touch it again.
- You cannot operate dimmed switches.
- Wipe off fingerprints on the surface of the display using a glass cleaning cloth.

Functions

26P027b

1. Trip information and Screen transition

Fuel consumption and energy monitor on the hybrid system are shown. For details, see page 113.

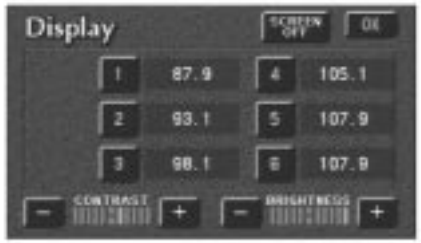

26P026a

2. Adjustment

The contrast and brightness on the screen are adjusted. For details, see page 115.

24P007a

3. Audio

The radio and cassette tape operations are available. For details, see page 118.

Information

24P006b

4. Warning display

The warning symbol for the faulty system is highlighted. For details, see page 97.

26P009a

Push the "INFO" button to display the "Information Menu" screen.

26P027b

Trip information: The energy monitor and fuel consumption screen are selected.

Screen transition: The screen transition screen is shown.

—Trip information

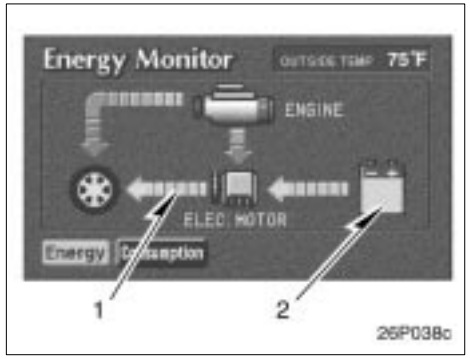

Energy monitor screen

Touch the “Energy” switch. Vehicle driving condition, hybrid system operating condition and energy recovery condition are shown.

1. Indicates the flow of energy by orange arrows. While the energy is recovered, the arrows change the pointing direction and turn green.
2. Indicates the remaining capacity of the hybrid vehicle battery.

The screen display updates every 2 seconds, so it may not coincide with the actual status.

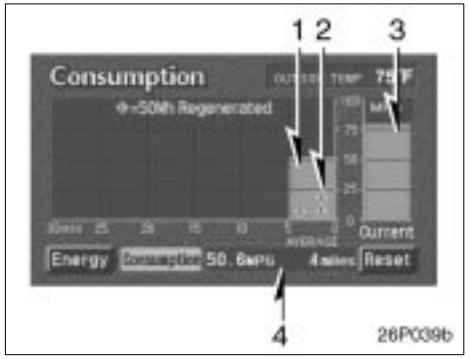

Fuel consumption screen

Touch the “Consumption” switch. Average fuel consumption, momentary fuel consumption and recovered energy are shown.

1. Indicates the past momentary fuel consumption every 5 minutes.
2. Indicates the energy recovered for 5 minutes with symbols. One symbol refers to 50 Wh or the energy by which a 50 W bulb illuminates for an hour. Up to 4 symbols will be shown.
3. Indicates the current momentary fuel consumption.
4. Indicates the average fuel consumption after being reset. To reset, touch the “Reset” switch.

—Screen transition

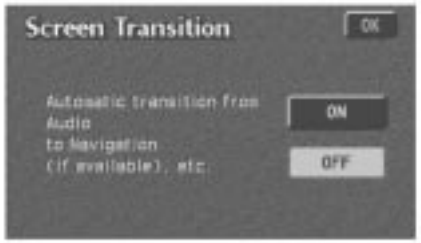

26P030a

The function returning to the previous screen from the audio screen is selectable. Select "ON" or "OFF" and then touch "OK".

ON: The previous screen automatically returns from the audio screen 20 seconds after the end of audio operation.

OFF: The audio screen remains on.

Adjustment

26P024

Push the "DISPLAY" button to display the "Display" screen.

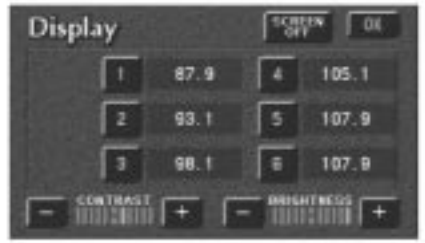

26P026a

Contrast and brightness adjustment

CONTRAST "+":
Strengthens the contrast of the screen.

CONTRAST "–":
Weakens the contrast of the screen.

BRIGHTNESS "+": Brightens the screen.

BRIGHTNESS "–": Darkens the screen.

The screen turns off when you push the "SCREEN OFF". To turn the display screen back on, push any bezel switch such as "INFO", etc. The selected screen appears.

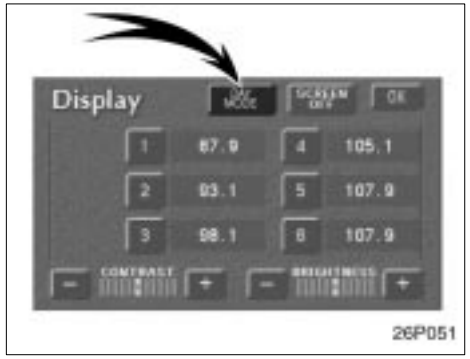

Depending on the position of the headlight switch, the screen changes to the day mode or night mode.

To display the screen in the day mode even with the headlight switch on, touch “DAY MODE” on the adjustment screen for brightness and contrast control.

However, if the switching km/h MPH button is on, mode switching cannot be done. It remains in the day mode. In this case, “DAY MODE” is not shown on the screen.

If the screen is set in the day mode with the headlight switch turned to on, this condition is memorized in the system even with the hybrid system turned off.

Outside temperature display

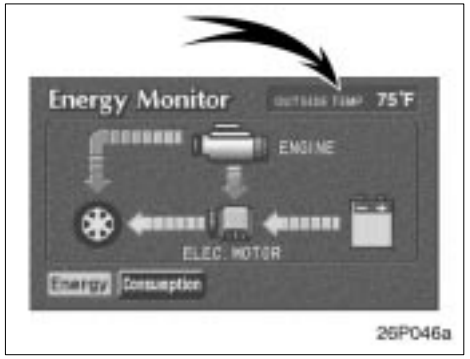

The outside temperature is shown ranging from –30°C (–22°F) up to 50°C (122°F) at the upper right of the energy consumption or energy monitor screen.

If the warning light symbol is shown in that position, the outside temperature is not displayed until the cause of the system failure is eliminated.

SECTION 2– 7

OPERATION OF INSTRUMENTS AND CONTROLS

Car audio system

Reference 118
Using your audio systemm 119
Radio operation 120
Cassette tape player operation 126
Car audio system operating hints 129

Reference

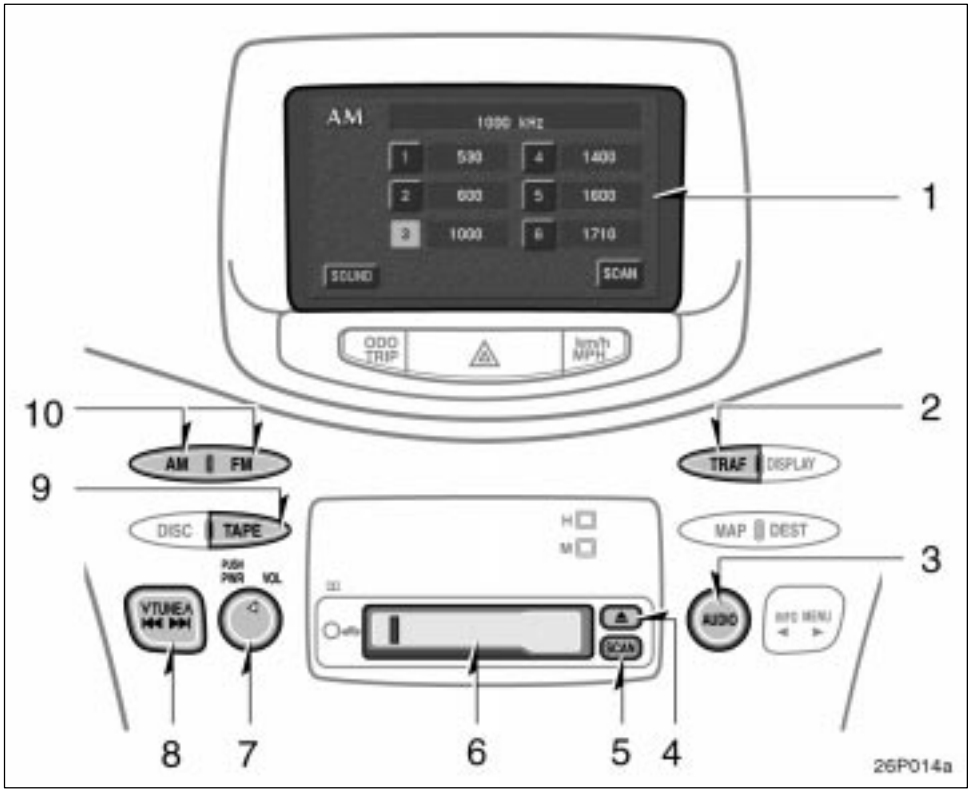

1. Multi–information display screen
   (See page 119 for details.)
2. Traffic announcement function
   (See page 123 for details.)
3. Audio operation screen display button
   (See page 119 for details.)
4. Stopping and ejecting a cassette tape
   (See page 126 for details.)
5. Scan tuning
   (See page 122 for details.)
6. Cassette tape slot
   (See page 126 for details.)
7. Turning the system on and adjusting the volume
   (See page 119 for details.)
8. Radio mode: Frequency tuning (See page 122 for details.)
   Tape mode: Direct access to a desired program (See page 128 for details.)
9. Tape mode button
   (See page 126 for details.)
10. Radio function button
    (See page 120 for details.)

Use the “DISC” switch in case you have a compact disc automatic changer installed at Toyota dealer.

Using your audio system— —Some basics

This section describes some of the basic features on Toyota audio systems. Some information may not pertain to your system.

Your audio system works when the ignition key is in the “ACC” or “ON” position.

TURNING THE SYSTEM ON AND OFF

Push “PWR” to turn the audio system on and off.

Push “AUDIO” to display switches for audio system.

Push “AM”, “FM” or “TAPE” to turn on that function without pushing “PWR”.

You can turn on each player by inserting a cassette tape.

You can turn off each player by ejecting the cassette tape. If the audio system was previously off, then the entire audio system will be turned off when you eject the cassette tape. If another function was previously playing, it will come on again.

SWITCHING BETWEEN FUNCTIONS

Push “AM”, “FM” or “TAPE” if the system is already on but you want to switch from one function to another.

VOLUME CONTROL

To adjust the volume, turn the “VOL”.

YOUR RADIO ANTENNA

To remove an antenna on the roof, carefully turn it counterclockwise.

NOTICE
To prevent damage to the antenna, make sure to remove it before driving your Toyota through an automatic car wash.

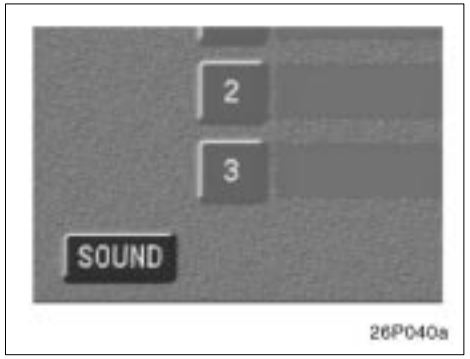

AUDIO CONTROL

This function adjusts the tone or balance.

Touching the “SOUND” switch on the screen displays the sound adjustment screen.

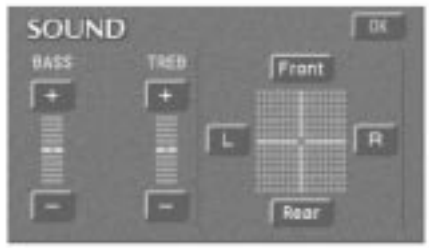

BASS "+" or "–": Adjusts low–pitched tone.

TREB "+" or "–": Adjusts high–pitched tone.

"Front" or "Rear": Adjusts sound balance between the front and rear speakers.

"L" or "R": Adjusts sound balance between the left and right speakers.

"OK": The previous screen returns.

YOUR CASSETTE PLAYER

When you insert a cassette, the exposed tape should be to the right.

NOTICE
Do not oil any part of the player and do not insert anything other than cassette tapes into the slot, or the tape player may be damaged.

Radio operation

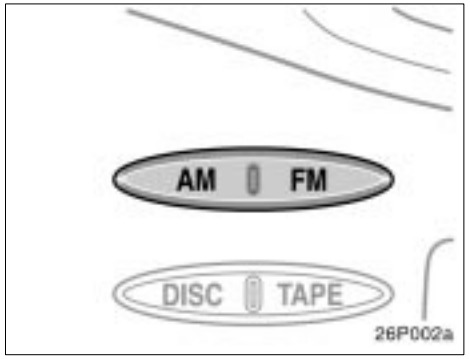

(a) Listening to the radio

Push the "AM/FM" button on either side.

Push the "∨TUNE∧" button on either side to step up the station band or to step down.

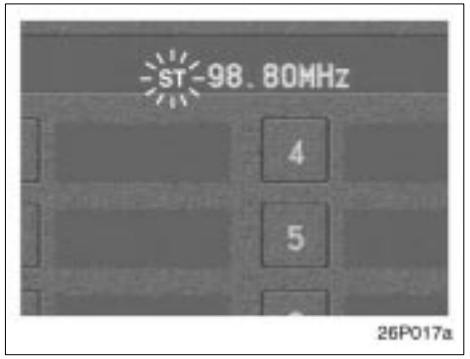

Your radio automatically changes to stereo reception when a stereo broadcast is received. "ST" appears on the display. If the signal becomes weak, the radio reduces the amount of channel separation to prevent the weak signal from creating noise. If the signal becomes extremely weak, the radio switches from stereo to mono reception. In this case, "ST" disappears from the display.

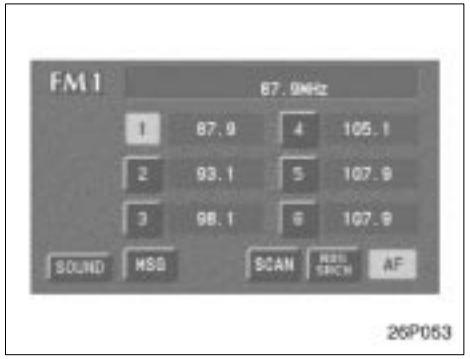

(b) Presetting a station

1. **Tune in the desired station.**
2. **Touch one of the station selector switches (1–6) and hold it until a beep is heard. This sets the station to the switch and the frequency appears at the right of the switch.**

Each switch can store one FM1, FM2 and AM station. To change the preset station to a different one, follow the same procedure.

The preset station memory is cancelled when the power source is interrupted by battery disconnection or a blown fuse.

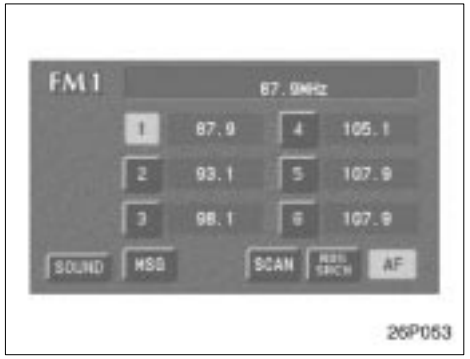

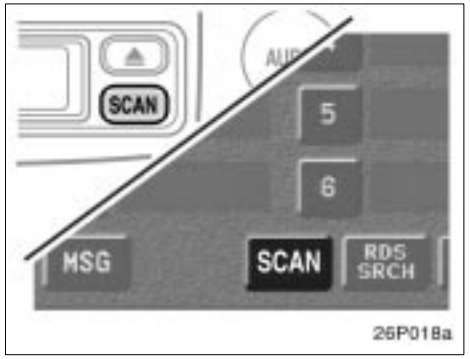

(c) Selecting a station

Tune in the desired station using one of the following methods.

Preset tuning: Touch the switch (1–6) for the station you want. The switch is highlighted in green. The station frequency appears on the display.

Manual tuning: Push the "VTUNEΛ" button on either side briefly. Each time you push the same side, the radio will step up or down to another frequency.

Seek tuning: Push the "VTUNEΛ" button on either side and hold it until you hear a beep. The radio will begin seeking up or down for a station of the nearest frequency and will stop on reception. Each time you push the same side, the stations will be searched out one after another.

Scan tuning: Push the "SCAN" button or touch the "SCAN" switch briefly. "SCAN" appears on the display. The radio will find the next station up or down the band, stay there for a few seconds, and then scan again. To select a station, push the "SCAN" button or touch the "SCAN" switch a second time.

Preset scan tuning: Push the “SCAN” button or touch the “SCAN” switch and hold it until you hear a beep. “P.SCAN” appears on the display. The radio will tune in the next preset station up or down the band, stay there for a few seconds, and then move to the next preset station. To select a station, push the “SCAN” button or touch the “SCAN” switch a second time.

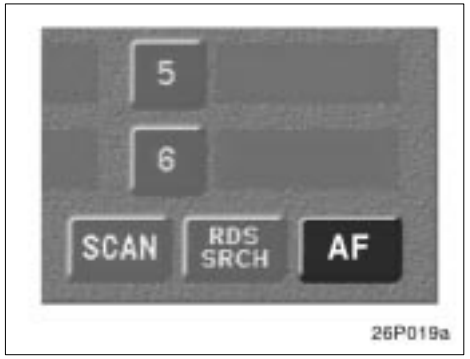

(d) RDS (Radio Data System)

AF (Alternative Frequency) function: A station providing good reception is automatically selected if current reception worsens.

This functions switches over to the broadcasting station providing good reception within the same RDS network and is convenient for following the appropriate stations.

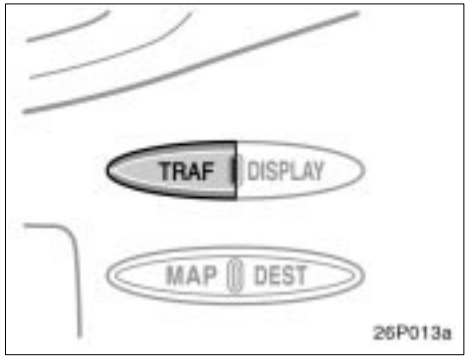

TRAF (Traffic) function: A station that regularly broadcasts traffic information is automatically located and broadcasts when the program starts.

When you push the “TRAF” button, “TRAF SEEK” appears on the display and the radio will start seeking any traffic program station.

If no traffic program station is found, “NOTHING” appears and the display returns to the previous mode.

If a traffic program station is found, the name for traffic program station is displayed for a while until a traffic announcement is received. On reception of “TRAF” is displayed and a traffic announcement program starts broadcasting.

After the traffic announcement program is over, “TRAF” display turns off and the display returns to the previous mode.

(e) PTY (Program type)

When you touch “RDS SRCH” during FM reception, “RDS SEARCH” appears and the radio starts to search RDS stations.

If any RDS stations cannot be found, “NO RDS Stations Found” appears and the previous mode returns.

If RDS stations are found, the stations are read and preset by program type. The FM TYPE mode screen displays the “** RDS Stations Found” (** indicates the number of stations which are found) and then RDS stations appear in the order of frequency.

If in one program type, more than 6 stations are found, the 6 stations are preset in the order of the lower frequency.

Each time you push the “ ” or “ ” switch, the program type changes as in the following:

- ROCK
- EASY LIS (Easy listening)
- CLS/JAZZ (Classical music and jazz)
- R&B (Rhythm and Blues)
- INFORM (Information)
- RELIGION
- MISC.
- ALERT (Emergency message)

26P041a

(f) Emergency broadcast

If an emergency broadcast is received during reception of other than AM broadcasting, “ALERT” appears and an emergency broadcast will start.

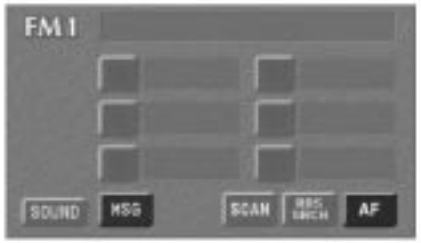

26P042a

(g) Radio text message

If “MSG” appears during FM reception, touching the “MSG” switch displays the message display screen which indicates the text message from the RDS station.

26P043a

If a new message is received with the first text message on the display, “MSG” appears on the corner of the screen again. When you touch “LATEST MESSAGE”, the new message appears.

The RDS audio system can store three messages consisting of 64 characters. To store a message in memory, touch the “STORE” switch until you hear a beep.

If 3 messages are already stored in memory, the oldest message will be overwritten by the new message.

To recall a radio text message, touch the “RECALL” switch. Each time you touch the switch, the display returns to the previous mode.

When you touch “OK”, the available message will be displayed beginning with the newest one.

Cassette tape player operation

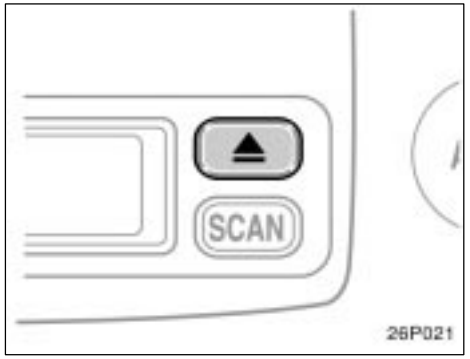

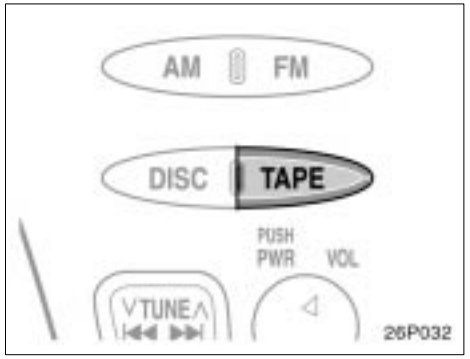

(a) Playing a cassette tape

The player will automatically start when you insert a cassette tape. At this time, “Tape” appears on the display.

If a metal or chrome equivalent cassette tape is put in the cassette player, the player will automatically recognize it and “MTL” appears on the display.

To eject the cassette tape, push the “⏏” button.

Auto–reverse feature: After the cassette player reaches the end of a tape, it automatically reverses and begins to play the other side, regardless of whether the cassette was playing or fast forwarding.

If a cassette is already in the slot, push the “DISC/TAPE” button on the “TAPE” side.

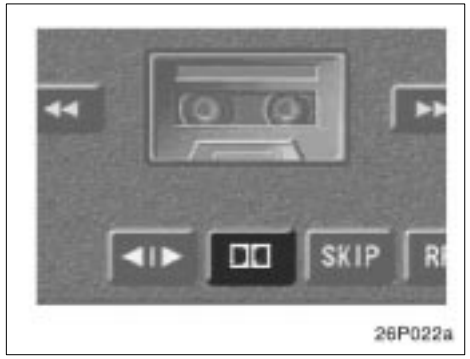

Dolby® Noise Reduction* feature: If you are listening to a tape that was recorded with Dolby® B Noise Reduction, touch the switch marked with the double–D symbol. The "DD" switch will be highlighted in green. Touch the switch again to turn off Dolby® B NR.

The Dolby NR mode reduces tape noise by about 10 dB. For best sound reproduction, play your tapes with this switch on or off according to the mode used for recording the tape.

*: Dolby noise reduction manufactured under license from Dolby Laboratories Licensing Corporation. "DOLBY" and the double D symbol DD are trademarks of Dolby Laboratories Licensing Corporation.

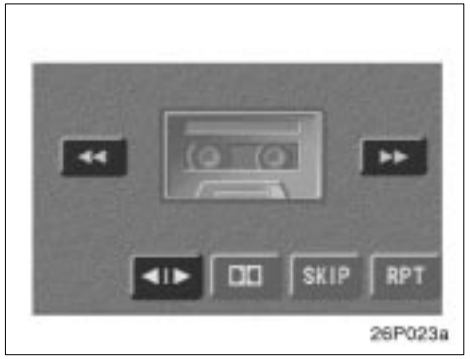

(b) Manual program selection

Reverse switch: You can reverse the tape by touching the "◀I▶" switch at the same time. The display will show the opposite direction after reversing the tape. Also if the tape reaches the end of one side, it is automatically reversed to the other side.

Fast forward and Rewind switches: You can fast forward or fast rewind by touching the "◀◀" or "▶▶" switch.

To stop the tape while it is fast forwarding, touch "▶▶"; to stop the tape while it is rewinding, touch "◀◀".

If a tape rewinds completely, the cassette player will stop and then play the same side. If a tape fast forwards completely, the cassette player will play the other side of the tape using the auto–reverse feature.

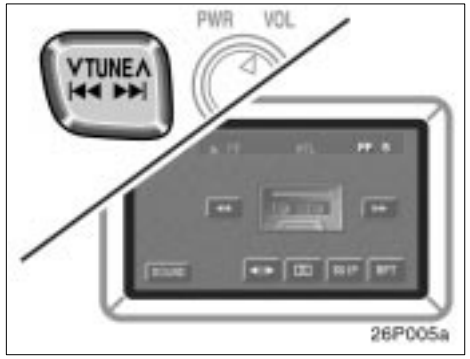

(c) Start of a track

You can skip forward or skip rewind by pushing the "VTUNEΛ" button on either side. You like to choose within previous 9 tracks and next 9 tracks being played. Press the start of track button as many as you like to skip (3 times if you like to skip to the third track).

(d) Other cassette tape player functions

"RPT" switch: Use it for automatic repeat of the track you are currently listening to.

Touch the switch while the track is playing. When the track is finished, the player will automatically go back to the beginning of the track and play the track again. To cancel it, touch the switch once again.

There must be at least 3 seconds of blank space between tracks in order for the repeat feature to work correctly.

"SKIP" switch: Use it for fast forward past long stretches of blank tape. This is especially useful at the end of cassettes.

Touch the "SKIP" switch. The letters light up on the "SKIP" switch. The cassette player will keep track of how much blank space it plays. After it plays on the blank portion for about 15 seconds, it will automatically fast forward to the next track and play.

Touch the switch a second time to turn off the skip feature.

Car audio system operating hints

NOTICE

To ensure correct audio system operations:

- ***Be careful not to spill beverages over the audio system.***
- ***Do not put anything other than a cassette tape into the cassette tape slot.***
- ***The use of a cellular phone inside or near the vehicle may cause a noise from the speakers of the audio system which you are listening to. However, this does not indicate a malfunction.***

RADIO RECEPTION

FM broadcasts have a range of about 40 km or 25 miles. When driving away from a station, you may have to fine–tune your radio and turn up the volume as the station gets weaker. Because FM uses a line–of–sight signal, tall buildings or hills may sometimes block reception. These are all normal characteristics of FM reception and do not indicate any problem with the radio itself.

CARING FOR YOUR CASSETTE PLAYER AND TAPES

For the best performance for your cassette player and tapes:

Clean the tape head and other parts regularly.

- A dirty tape head or tape path can decrease sound quality and tangle your cassette tapes. The easiest way to clean them is by using a cleaning tape. (A wet type is recommended.)

Use high–quality cassettes:

- Low–quality cassette tapes can cause many problems, including poor sound, inconsistent playing speed, and constant auto–reversing. They can also get stuck or tangled in the cassette player.
- Do not use a cassette if it has been damaged or tangled or if its label is peeling off.
- Do not leave a cassette in the player if you are not listening to it, especially if it is hot outside.
- Store cassettes in their cases and out of direct sunlight.
- Avoid using cassettes with a total playing time longer than 100 minutes (50 minutes per side). The tape used in these cassettes is thin and could get stuck or tangled in the cassette player.

SECTION 2– 8

OPERATION OF INSTRUMENTS AND CONTROLS

Air conditioning system

Controls 132
Air flow selector settingss 136
Operating tips 136
Instrument panel vents 138

Controls

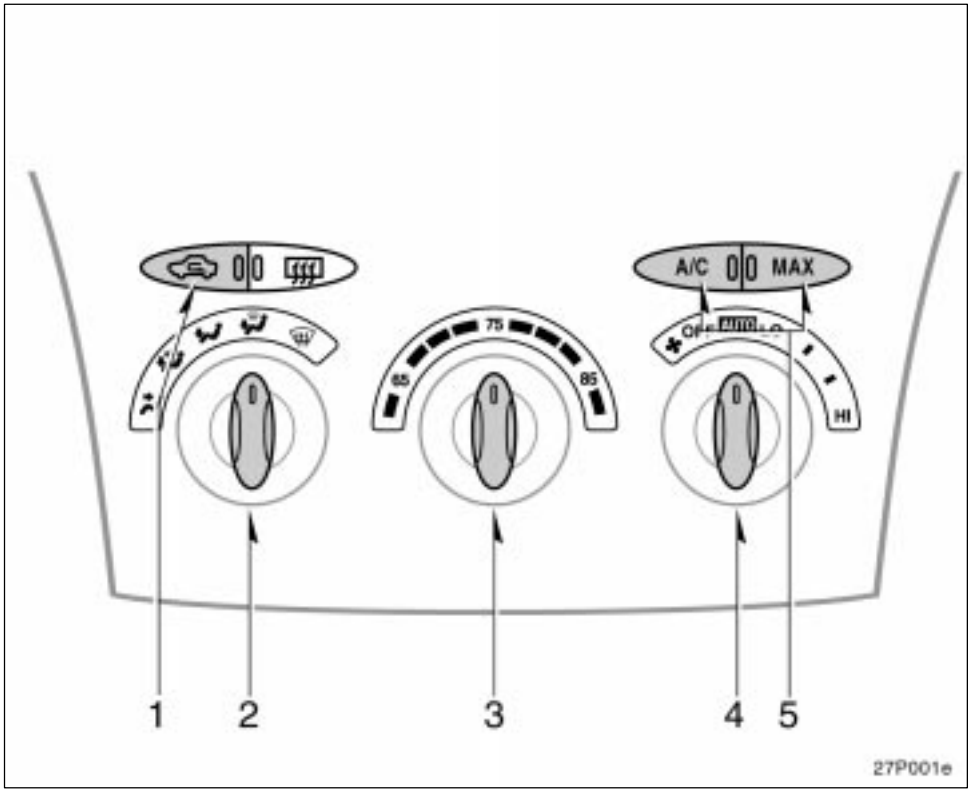

1. Air intake selector
2. Air flow selector
3. Temperature selector
4. Fan speed selector
5. Air conditioning on–off buttons

“AUTO” position (for fan speed)

For automatic operation of the air conditioning, turn the fan speed selector knob to “AUTO” position.

In the automatic operation mode, the air conditioning selects the most suitable fan speed according to the temperature.

You may use manual controls if you want to select your own settings.

Fan speed selector

Turn the knob to adjust the fan speed—to the right to increase, to the left to decrease.

In automatic operation, you do not have to adjust the fan speed unless you desire another fan speed mode.

Temperature selector

Turn the knob to adjust the temperature to the right to warm and then to the left to cool.

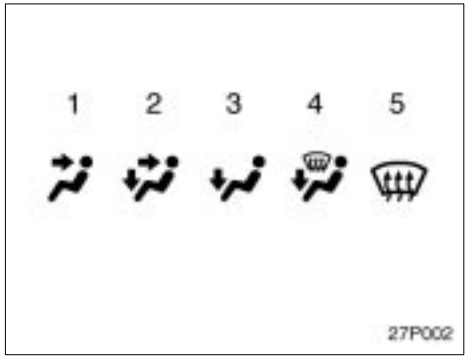

Air flow selector

Turn the knob to select the vents used for air flow.

1. **Panel—**Air flows mainly from the instrument panel vents.
2. **Bi–level—**Air flows from both the floor vents and the instrument panel vents.
3. **Floor—**Air flows mainly from the floor vents.
4. **Floor/Windshield—**Air flows mainly from the floor vents and windshield vents.

   This position allows the air intake to select FRESH automatically. This is to clean up the front view more quickly.

   If you want to return the setting to RECIRCULATE mode, press the air intake selector button once again.

   Press the “A/C” and “MAX” button for dehumidified heating or cooling. This setting clears the front view more quickly.
5. **Windshield—**Air flows mainly from the windshield vents.

   Turning the air flow selector to the windshield position turns on the defogging function with the purpose of clearing the front view.

   This position allows the air intake to select FRESH automatically. This is to clean up the front view more quickly.

   If you want to return the setting to RECIRCULATE mode, press the air intake selector button once again.

For details about air flow selector settings, see “Air flow selector settings” on page 136.

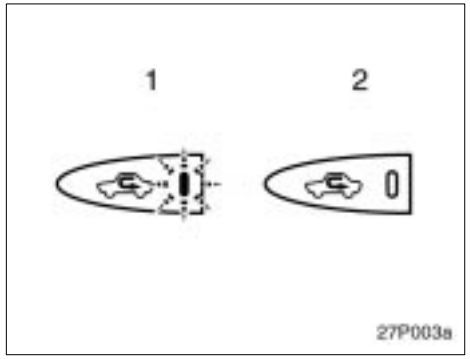

Air intake selector

Press the button to select the air source.

1. **Recirculate—**Recirculates the air inside the vehicle.
2. **Fresh—**Draws outside air into the system.

The air intake selector button is used to switch the air intake FRESH mode that draws outside air into the system and RECIRCULATED mode that recirculates the air inside vehicle.

To turn the air source to RECIRCULATED mode, press the button. The indicator will come on. To turn the air source to FRESH mode, press the button again. The indicator will go off.

To prevent fogging up of the windshield, the air intake mode may change automatically to FRESH depending on the condition of the air conditioning system.

2–way air intake control

To improve fuel economy, "Fresh" mode control changes when the air intake selector is set in "Fresh" mode on the following conditions:

- When the maximum heating is needed with the air flow in "Floor" or "Floor/Windshield", fresh air flows in the upper compartment, while air is recirculated in the lower compartment.
- When cooling is needed, both fresh and recirculate modes turns on.

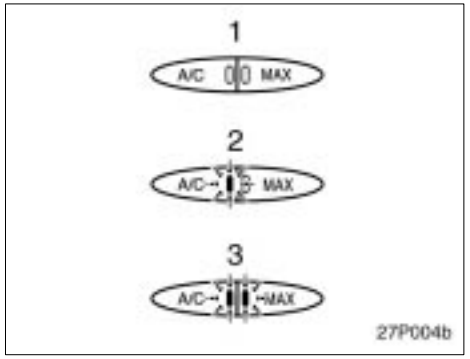

Air conditioning on–off buttons

To turn on the air conditioning, push the "A/C" button.

1. Turning off the air conditioning

Push the "A/C" button to turn off the air conditioning.

2. Economical and environment–friendly cooling

Usually use the air conditioning with the "A/C" button on. If you push the button again, the air conditioning turns off.

3. Powerful cooling and dehumidifying

If the air conditioning does not work well with the “A/C” button on, push the “MAX” button. To cancel the “MAX” mode, push the “MAX” button again. To turn off the air conditioning, push the “A/C” button.

With the “MAX” button on, the gasoline engine is frequently used.

The air conditioning may not turn on with the selector lever in “N” position because the gasoline engine cannot start.

If the “A/C” button indicator flashes, there is a problem in the air conditioning system and the air conditioning automatically shuts off. If this happens, take your vehicle to your Toyota dealer for service.

For economical and environment–friendly use

Usually, use the air conditioning with the “A/C” button on (economical and environment–friendly cooling).

In this mode the gasoline engine starts and stops automatically and good fuel economy driving is achieved.

To use the air conditioning in economical and environment–friendly way, we recommend the following setting:

1. Lower the setting temperature if you feel a little hot with the “A/C” button on.
2. If you feel still hot with the “A/C” button on, push the “MAX” button also. After the compartment cools, turn off the “MAX” mode only.

Air flow selector settings

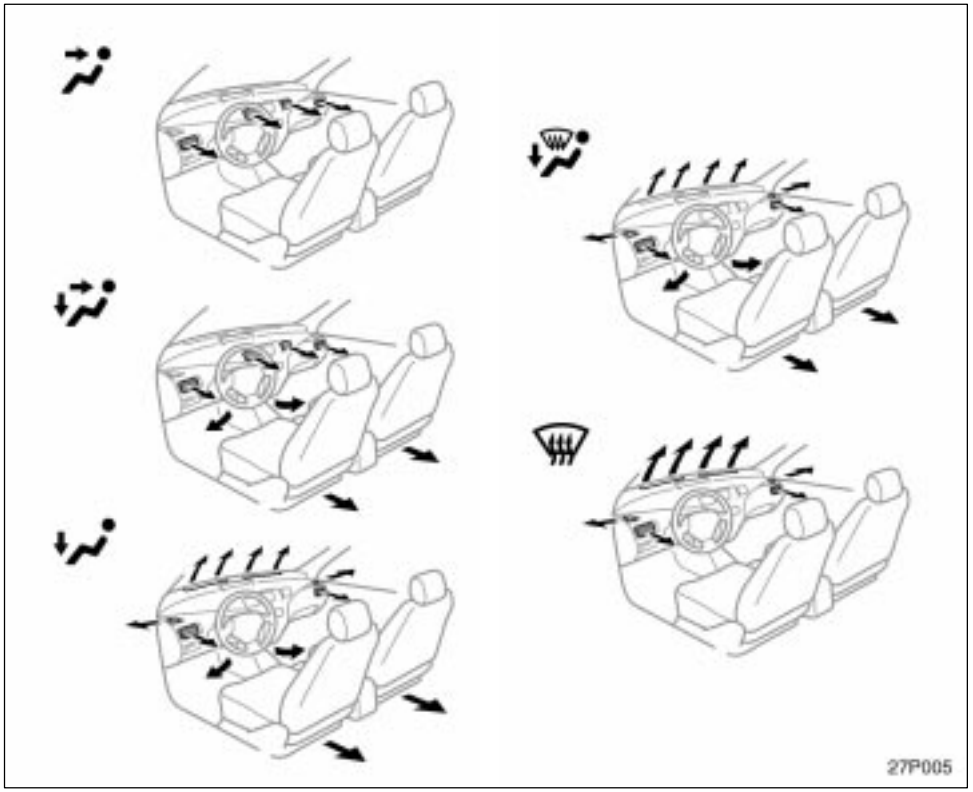

Operating tips

- To cool off your Toyota after it has been parked in the hot sun, drive with the windows open for a few minutes. This vents the hot air, allowing the air conditioning to cool the interior more quickly.
- Make sure the air intake grilles in front of the windshield are not blocked (by leaves or snow, for example).
- On humid days, do not blow cold air on the windshield. The windshield could fog up because of the difference in air temperature on the inside and outside of the windshield.
- Keep the area under the front seats clear to allow air to circulate throughout the vehicle.
- On cold days, set the fan speed to high for a minute to help clear the intake ducts of snow or moisture. This can reduce the amount of fogging on the windows.
- When driving on dusty roads, close all windows. If dust thrown up by the vehicle is still drawn into the vehicle after closing the windows, it is recommended that the air intake selector be set to FRESH and the fan speed selector to any setting except “OFF”.

- If following another vehicle on a dusty road, or driving in windy and dusty conditions, it is recommended that the air intake selector be temporarily set to RECIRCULATE, which will close off the outside passage and prevent outside air and dust from entering the vehicle interior.

Heating

For best results, set controls to:

Fan speed—"AUTO"
Temperature—To the desired temperature
Air intake—FRESH (outside air)
Air flow—FLOOR
Air conditioning—OFF

- For quick heating, select recirculated air for a few minutes. To keep the windows from fogging, select fresh after the vehicle interior has been warmed.
- Press the "MAX" button on for dehumidified heating.
- Choose "Floor/Windshield" air flow to heat the vehicle interior while defrosting or defogging the windshield.

Air conditioning

For best results, set controls to:

Fan speed—"AUTO"
Temperature—To the desired temperature
Air intake—FRESH (outside air)
Air flow—PANEL
Air conditioning—"A/C" ON

- For quick cooling, move the air intake selector to recirculate for a few minutes.

Ventilation

For best results, set controls to:

Fan speed— "AUTO"
Temperature—To the desired temperature
Air intake—FRESH (outside air)
Air flow—PANEL
Air conditioning—OFF

Defogging

The inside of the windshield

For best results, set controls to:

Fan speed—"AUTO"
Temperature—Towards high temperature to heat;
low temperature to cool
Air intake—FRESH (outside air)
Air flow—WINDSHIELD
Air conditioning—"MAX" ON

Turning the air flow selector to the windshield position turns on the defogging function with the purpose of clearing the front view.

When turning the air flow selector to windshield or floor/windshield position, the air intake selects FRESH automatically. This is to clean up the front view more quickly.

If you want to return the setting to RECIRCULATE mode, press the air intake selector button once again.

- On humid days, do not blow cold air on the windshield—the difference between the outside and inside temperatures could make the fogging worse.

Defrosting

The outside of the windshield

For best results, set controls to:

Fan speed— "AUTO"
Temperature—Towards high temperature
Air intake—FRESH (outside air)
Air flow—WINDSHIELD
Air conditioning—OFF

Turning the air flow selector to the windshield position turns on the defogging function with the purpose of clearing the front view.

When turning the air flow selector to windshield or floor/windshield position, the air intake selects FRESH automatically. This is to clean up the front view more quickly.

If you want to return the setting to RECIRCULATE mode, press the air intake selector button once again.

- To heat the vehicle interior while defrosting the windshield, choose "Floor/Windshield" air flow.

Instrument panel vents

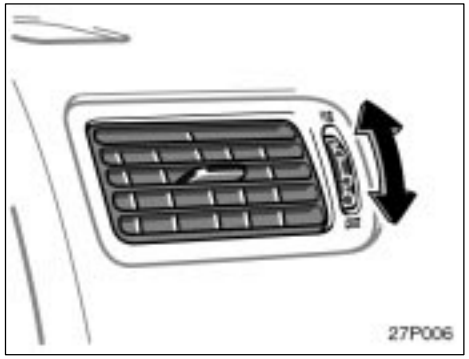

Side vents

If air flow control is not satisfactory, check the instrument panel vents. The instrument panel vents may be opened or closed as shown.

SECTION 2– 9

OPERATION OF INSTRUMENTS AND CONTROLS

Other equipment

Clock 140
Power outlett 140
Rear console box 141
Glove box 141
Auxiliary boxes 141
Cup holders 142
Floor mat 143

Clock

The digital clock indicates the time.

The key must be in the “ACC” or “ON” position.

To set the hour: Push the “H” button.
To reset the minutes: Push the “M” button.

If the electrical power source has been disconnected from the clock, the time display will automatically be set to 1:00 (one o’clock).

When the instrument panel lights are turned on, the brightness of the time indicator will be reduced.

Power outlet

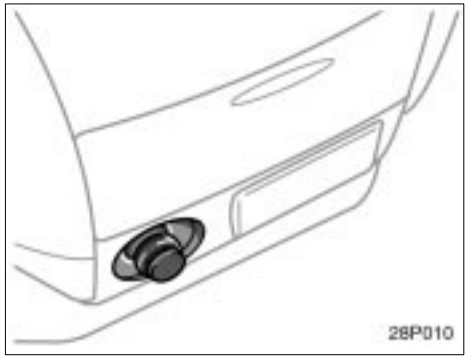

The power outlet is designed for power supply for car accessories.

The key must be in the “ACC” or “ON” position for the power outlet to be used.

NOTICE

- ***To prevent the fuse from being blown, do not use the electricity over the total vehicle capacity of 12V/120W.***
- ***To prevent the battery from being discharged, do not use the power outlet longer than necessary when the hybrid system is not operating.***

- ***Close the power outlet lid when the power outlet is not in use. Inserting a foreign object other than the appropriate plug that fits the outlet, or allowing any liquid into the outlet may cause electrical failure or short circuits.***

Rear console box

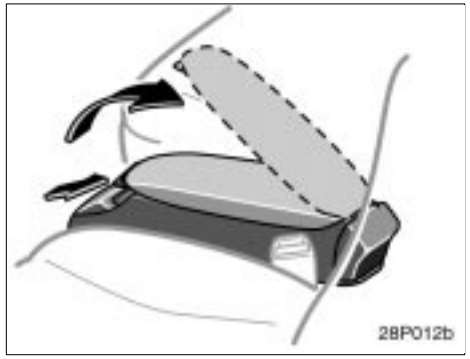

To use the rear console box, open as shown in the illustration.

Glove box

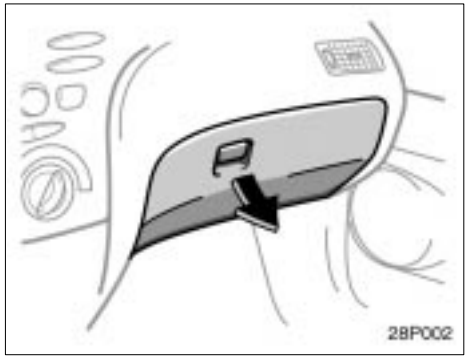

To open the glove box, pull the lever.

⚠ CAUTION

To reduce the chance of injury in case of an accident or a sudden stop, always keep the glove box door closed while driving.

Auxiliary boxes

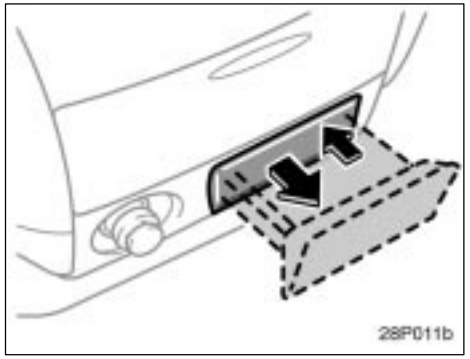

On the instrument panel

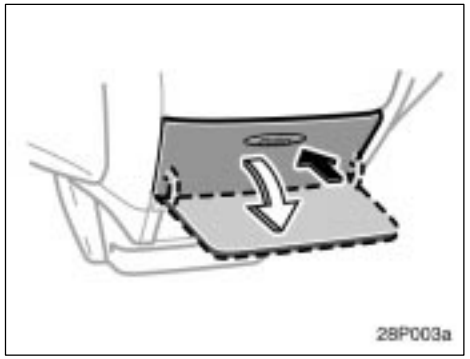

On the instrument panel

Cup holders

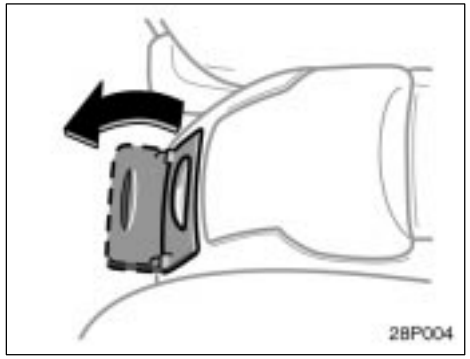

On the front side of console box

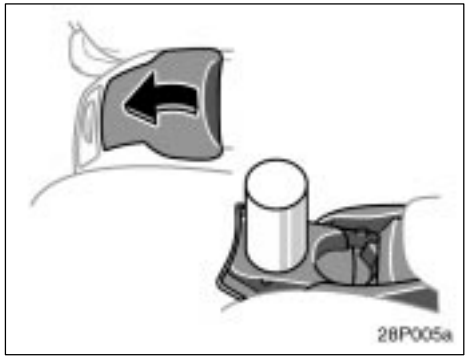

Front

To use the box, open the lid.

⚠ CAUTION

To reduce the chance of injury in case of an accident or a sudden stop, always keep the auxiliary box closed while driving.

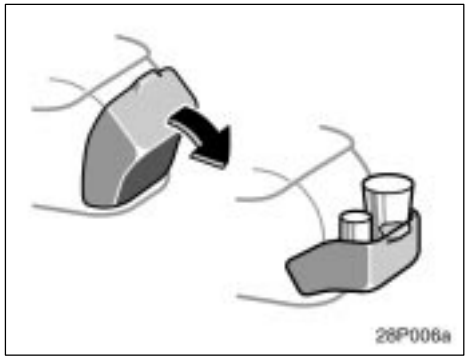

Rear

The cup holder is designed for holding cups or drink–cans securely.

To use the cup holder, open the lid.

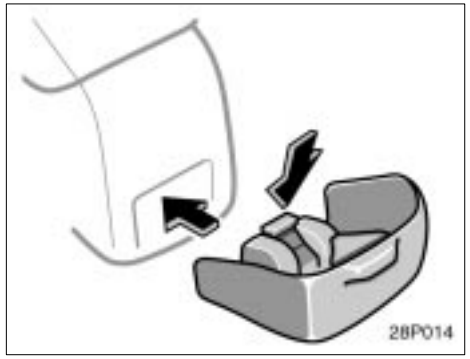

Rear cup holder only:

If you put a heavy cup on the holder, the holder may come off from the hook. If removed, push on the hook and secure the holder.

⚠ CAUTION

- **Do not place anything else other than cups or drink–cans on the cup holder, as such items may be thrown about in the compartment and possibly injure people in the vehicle during sudden braking or in an accident.**
- **To reduce the chance of injury in case of an accident or a sudden stop while driving, keep the cup holder closed when not in use.**

Floor mat

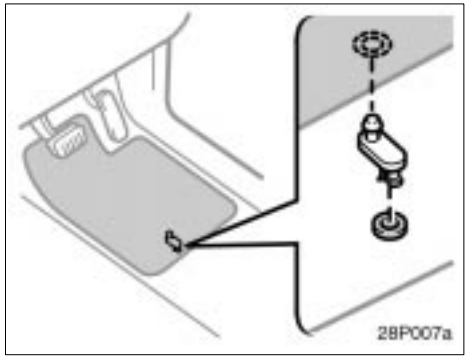

Use a floor mat of the correct size.

If the floor carpet and floor mat have a hole, then it is designed for use with a locking clip. Fix the floor mat with locking clip into the hole in the floor carpet.

⚠ CAUTION

Make sure the floor mat is properly placed on the floor carpet. If the floor mat slips and interferes with the movement of the pedals during driving, it may cause an accident.

SECTION 3

INFORMATION BEFORE DRIVING YOUR TOYOTA

Break–in period 146
Fuel 146
Fuel pump shut–off systemm 148
Operation in foreign countries 148
Three–way catalytic converter Toyota HC adsorber and catalyst system 149
Engine exhaust cautions 150
Facts about engine oil consumption 151
Iridium–tipped spark plugs 152
Brake system 152
Brake pad wear limit indicators 156
Luggage stowage precautions 156
Your Toyota's identification 157
Theft prevention labels 158
Suspension and chassis 158
Type of tires 158

Break–in period

Drive gently and avoid high speeds.

Your vehicle does not need an elaborate break–in. But following a few simple tips for the first 1000 km (600 miles) can add to the future economy and long life of your vehicle:

- Do not drive over 100 km/h (62 mph).
- Avoid full–throttle starts.
- Try to avoid hard stops during the first 300 km (200 miles).

Fuel

FUEL TYPE

Your vehicle must use only unleaded gasoline.

To help prevent gas station mixups, your Toyota has a smaller fuel tank opening. The special nozzle on pumps with unleaded fuel will fit it, but the larger standard nozzle on pumps with leaded gas will not.

At a minimum, the gasoline you use should meet the specifications of ASTM D4814 in the U.S.A. and CGSB 3.5–M93 in Canada.

NOTICE
Do not use leaded gasoline. Use of leaded gasoline will cause the three–way catalytic converter to lose its effectiveness and the emission control system to function improperly. Also, this can increase maintenance costs.

OCTANE RATING

Select unleaded gasoline with an Octane Rating of 87 (Research Octane Number 91) or higher.

Use of unleaded fuel with an octane number or rating lower than stated above will cause persistent heavy knocking. If severe, this will lead to engine damage.

If your engine knocks ...

If you detect heavy knocking even when using the recommended fuel, or if you hear steady knocking while holding a steady speed on level roads, consult your Toyota dealer.

However, now and then, you may notice light knocking for a short time while accelerating or driving up hills. This is no cause for concern.

GASOLINE CONTAINING DETERGENT ADDITIVES

Toyota recommends the use of gasoline that contains detergent additives to avoid build–up of engine deposits.

However, all gasoline sold in the U.S. contains detergent additives to keep clean and/or clean intake systems.

QUALITY GASOLINE

Automotive manufacturers in the U.S., Europe and Japan have developed a specification for quality fuel named World–Wide Fuel Charter (WWFC) that is expected to be applied world wide. The WWFC consists of three categories that depend on required emission levels. In the U.S., category 3 has been adopted. The WWFC improves air quality by providing for better emissions in vehicle fleets, and customer satisfaction through better vehicle performance.

CLEANER BURNING GASOLINE

Cleaner burning gasoline, including reformulated gasoline that contains oxygenates such as ethanol or MTBE is available in many areas.

Toyota recommends the use of cleaner burning gasoline and appropriately blended reformulated gasoline. These types of gasoline provide excellent vehicle performance, reduce vehicle emissions, and improve air quality.

OXYGENATES IN GASOLINE

Toyota allows the use of oxygenate blended gasoline where the oxygenate content is up to 10% ethanol or 15% MTBE. If you use gasohol in your Toyota, be sure that it has an octane rating no lower than 87.

Toyota does not recommend the use of gasoline containing methanol.

GASOLINE CONTAINING MMT

Some gasoline contain an octane enhancing additive called MMT (Methylcyclopentadienyl Manganese Tricarbonyl).

Toyota does not recommend the use of gasoline that contains MMT. If fuel containing MMT is used, your emission control system may be adversely affected. The Malfunction Indicator Lamp on the instrument cluster may come on. If this happens, contact your Toyota dealer for service.

GASOLINE QUALITY

In a very few cases, you may experience driveability problems caused by the particular gasoline that you are using. If you continue to have unacceptable driveability, try changing gasoline brands. If this does not rectify your problem, then consult your Toyota dealer.

NOTICE

- ***Do not use gasohol other than stated above. It will cause fuel system damage or vehicle performance problems.***
- ***If drivability problems are encountered (poor hot starting, vaporizing, engine knock, etc.), discontinue its use.***
- ***Take care not to spill gasohol during refueling. Gasohol may cause paint damage.***

FUEL TANK CAPACITY

45 L (11.9 gal., 9.9 Imp. gal.)

The given fuel tank capacity is measured on EPA/CARB ORVR testing condition which is approved for nominal capacity measurement condition.

The fuel tank capacity is decreased at low ambient temperature. (decreased by about 5 L (1.3 gal., 1.1 Imp. gal.) at –10°C (14°F).)

Fuel pump shut–off system

The fuel pump shut off system stops supplying fuel to the engine to minimize the risk of fuel leakage when the engine stalls or an airbag inflates upon collision. To restart the hybrid system after the fuel pump shut off system activates, turn the ignition switch to “ACC” or “LOCK” once and start it.

⚠ CAUTION

Inspect the ground under the vehicle before restarting the hybrid system. If you find that liquid has leaked onto the ground, the fuel system has been damaged and it is in need of repair. In this case, do not restart the hybrid system.

Operation in foreign countries

If you plan to drive your Toyota in another country...

First, comply with the vehicle registration laws.

Second, confirm the availability of the correct fuel (unleaded and minimum octane number).

Three–way catalytic converter Toyota HC adsorber and catalyst system

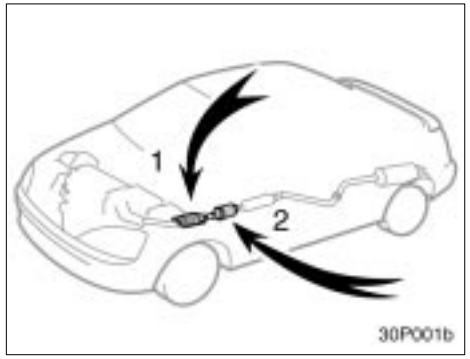

1. **Three–way catalytic converter**
2. **Toyota HC adsorber and catalyst system**

The three–way catalytic converter and Toyota HC adsorber and catalyst system are emission control devices installed in the exhaust system.

Its purpose is to reduce pollutants in the exhaust gas.

⚠ CAUTION

- **Keep people and combustible materials away from the exhaust pipe while the engine is running. The exhaust gas is very hot.**
- **Do not drive, idle or park your vehicle over anything that might burn easily such as grass, leaves, paper or rags.**

NOTICE

A large amount of unburned gases flowing into the three–way catalytic converter and Toyota HC adsorber and catalyst system may cause it to overheat and create a fire hazard. To prevent this and other damage, observe the following precautions:

- ***Use only unleaded gasoline.***
- ***Do not drive with an extremely low fuel level; running out of fuel could cause the engine to misfire, creating an excessive load on the three–way catalytic converter and Toyota HC adsorber and catalyst system.***
- ***Do not turn off the ignition while the vehicle is moving.***
- ***Keep your engine in good running order. Malfunctions in the engine electrical system, electronic ignition system/distributor ignition system or fuel system could cause an extremely high temperature of three–way catalytic converter and Toyota HC adsorber and catalyst system.***

- *If the engine becomes difficult to start or stalls frequently, take your vehicle in for a check–up as soon as possible. Remember, your Toyota dealer knows your vehicle and its three–way catalytic converter and Toyota HC adsorber and catalyst system best.*
- *To ensure that the three–way catalytic converter and Toyota HC adsorber and catalyst system and the entire emission control system operate properly, your vehicle must receive the periodic inspections required by the Toyota Maintenance Schedule. For scheduled maintenance information, refer to the "Scheduled Maintenance Guide" or "Owner's Manual Supplement".*
- *Do not apply coating agent such as for anti–rust under–coating to the exhaust pipe (especially to the actuator to valve).*

Engine exhaust cautions

⚠ CAUTION

- **Avoid inhaling the engine exhaust. It contains carbon monoxide, which is a colorless and odorless gas. It can cause unconsciousness or even death.**
- **Make sure the exhaust system has no holes or loose connections. The system should be checked from time to time. If you hit something, or notice a change in the sound of the exhaust, have the system checked immediately.**
- **Do not run the hybrid system in a garage or enclosed area except for the time needed to drive the vehicle in or out. The exhaust gases cannot escape, making this a particularly dangerous situation.**
- **Do not remain for a long time in a parked vehicle with the hybrid system running. If it is unavoidable, however, do so only in an unconfined area and adjust the heating or cooling system to force outside air into the vehicle.**
- **Keep the trunk lid closed while driving. An open or unsealed trunk lid may cause exhaust gases to be drawn into the vehicle.**
- **To allow proper operation of your vehicle's ventilation system, keep the inlet grilles in front of the windshield clear of snow, leaves, or other obstructions.**
- **If you smell exhaust fumes in the vehicle, drive with the windows open and the trunk lid closed. Have the cause immediately located and corrected.**

Facts about engine oil consumption

FUNCTIONS OF ENGINE OIL

Engine oil has the primary functions of lubricating and cooling the inside of the engine, and plays a major role in maintaining the engine in proper working order.

ENGINE OIL CONSUMPTION

It is normal that an engine should consume some engine oil during normal engine operation. The causes of oil consumption in a normal engine are as follows.

- Oil is used to lubricate pistons, piston rings and cylinders. A thin film of oil is left on the cylinder wall when a piston moves downwards in the cylinder. High negative pressure generated when the vehicle is decelerating sucks some of this oil into the combustion chamber. This oil as well as some part of the oil film left on the cylinder wall is burned by the high temperature combustion gases during the combustion process.
- Oil is also used to lubricate the stems of the intake valves. Some of this oil is sucked into the combustion chamber together with the intake air and is burned along with the fuel. High temperature exhaust gases also burn the oil used to lubricate the exhaust valve stems.

The amount of engine oil consumed depends on the viscosity of the oil, the quality of the oil and the conditions the vehicle is driven under.

More oil is consumed by high–speed driving and frequent acceleration and deceleration.

A new engine consumes more oil, since its pistons, piston rings and cylinder walls have not become conditioned.

When judging the amount of oil consumption, note that the oil may become diluted and make it difficult to judge the true level accurately.

As an example, if a vehicle is used for repeated short trips, and consumes a normal amount of oil, the dipstick may not show any drop in the oil level at all, even after 1000 km (600 miles) or more. This is because the oil is gradually becoming diluted with fuel or moisture, making it appear that the oil level has not changed.

The diluting ingredients evaporate out when the vehicle is then driven at high speeds, as on an expressway, making it appear that oil is excessively consumed after driving at high speeds.

IMPORTANCE OF ENGINE OIL LEVEL CHECK

One of the most important points in proper vehicle maintenance is to keep the engine oil at the optimum level so that oil function will not be impaired. Therefore, it is essential that the oil level be checked regularly. Toyota recommends that the oil level be checked every time you refuel the vehicle.

NOTICE
Failure to check the oil level regularly could lead to serious engine trouble due to insufficient oil.

For detailed information on oil level check, see “Checking the engine oil level” on page 208 in Section 8–2.

Iridium–tipped spark plugs

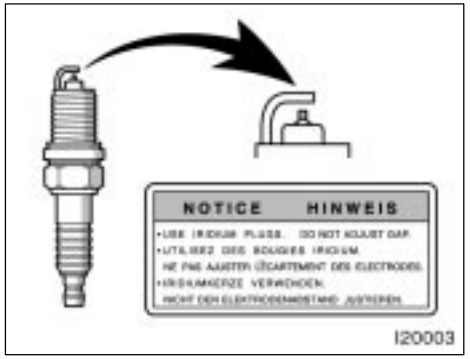

Your engine is fitted with iridium–tipped spark plugs.

NOTICE
Use only iridium–tipped spark plugs and do not adjust gaps for your engine performance and smooth drivability.

Brake system

REGENERATIVE BRAKE

When the brake is applied, the electric motor used as a generator converts kinetic energy into electric energy.

The regenerative brake works in the following operations.

1. When the accelerator pedal is released, the reduced speed equal to engine braking in a gasoline–fueled vehicle is obtained in accordance with the running mode position of the selector lever.
2. When the brake pedal is depressed with the selector lever in “D” or “B”, the regenerative brake works.

HYDRAULIC BRAKE

This brake system has 2 independent hydraulic circuits. If either circuit should fail, the other will still work. However, the pedal will be harder to press, and your stopping distance will be longer. Also, the brake system warning light may come on.

⚠ CAUTION

Do not drive your vehicle with only a single brake system. Have your brakes fixed immediately.

BRAKE BOOSTER

The brake booster uses brake fluid pressurized by the pump to power–assist the brakes. If the brake booster fails during driving, the brake system warning light comes on and buzzer sounds continuously. In this case, the brakes may not work properly. If they do not work well, depress the brake pedal firmly. If the brake system warning light comes on, immediately stop your vehicle and contact your Toyota dealer.

The brake system warning light may stay on for about 60 seconds after the ignition key is turned to the "ON" position. It is normal if the light turns off after a while.

Depressing the brake pedal repeatedly may turn on the brake system warning light and buzzer. It is normal if the light turns off and the buzzer stops sounding after a few seconds.

You may hear a small sound in the engine compartment after the hybrid system is started or the brake pedal is depressed repeatedly. This is a pump pulsating sound of the brake system, and it is not a malfunction.

⚠ CAUTION

- **Do not pump the brake pedal if the hybrid system is not operating. Each push on the pedal uses up your reserved brake fluid pressure.**
- **Even if the power assist is completely lost, the brakes will still work. But you will have to push the pedal hard, much harder than normal. And your braking distance will be longer.**

ANTI–LOCK BRAKE SYSTEM

The anti–lock brake system is designed to automatically help prevent lock–up of the wheels during a sudden braking or braking on slippery road surfaces. This assists in providing directional stability and steering performance of the vehicle under these circumstances.

Effective way to press the ABS brake pedal: When the anti–lock brake system function is in action, you may feel the brake pedal pulsating and hear a noise. In this situation, to let the anti–lock brake system work for you, just hold the brake pedal down more firmly. Do not pump the brake in a panic stop. This will result in reduced braking performance.

The anti–lock brake system becomes operative after the vehicle has accelerated to a speed in excess of approximately 10 km/h (6 mph). It stops operating when the vehicle decelerates to a speed below approximately 5 km/h (3 mph).

Depressing the brake pedal on slippery road surfaces such as on the manhole cover, the steel plate under the construction, joints in the bridge, etc. on a rainy day tends to activate the anti–lock brake system.

You may hear a click or motor sound in the engine compartment for a few seconds when the engine is started or just after the vehicle is started. This means that the anti–lock brake system is in the self check mode, and does not indicate a malfunction.

When the anti–lock brake system is activated, the following conditions may occur. They do not indicate a malfunction of the system:

- You may hear the anti–lock brake system operating and feel the brake pedal pulsating and the vibrations of the vehicle body and steering wheel. You may also hear the motor sound in the engine compartment even after the vehicle is stopped.
- At the end of the anti–lock brake system activation, the brake pedal may move a little forward.

⚠ CAUTION

Do not overestimate the anti–lock brake system: Although the anti–lock brake system assists in providing vehicle control, it is still important to drive with all due care and maintain a moderate speed and safe distance from the vehicle in front of you, because there are limits to the vehicle stability and effectiveness of steering wheel operation even with the anti–lock brake system on.

If tires grip performance exceeds its capability, or if hydroplaning occurs during high speed driving in the rain, the anti–lock brake system does not provide vehicle control.

Anti–lock brake system is not designed to shorten the stopping distance: Always drive at the moderate speed and maintain a safe distance from the vehicle in front of you. Compared with vehicles without an anti–lock brake system, your vehicle may require a longer stopping distance in the following cases:

- **Driving on rough, gravel or snow–covered roads.**
- **Driving with tire chains installed.**
- **Driving over the steps such as the joints on the road.**
- **Driving on roads where the road surface is pitted or has other differences in surface height.**

Install all 4 tires of specified size at appropriate pressure: The anti–lock brake system detects vehicle speeds using the speed sensors for respective wheels' turning speeds. The use of tires other than specified may fail to detect the accurate turning speed, resulting in a longer stopping distance.

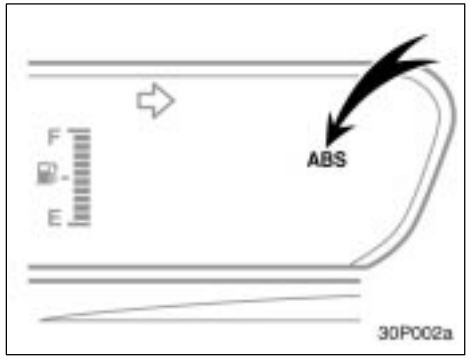

Vehicle sold in U.S.A.

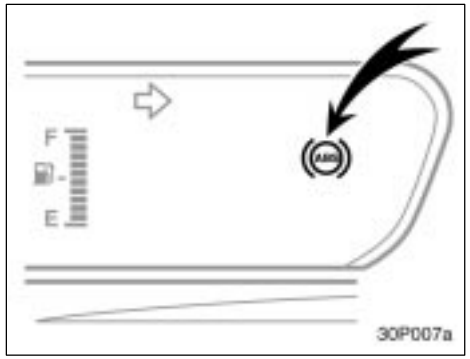

Vehicle sold in Canada

"ABS" warning light

The light comes on when the ignition key is turned to the "ON" position. If the anti–lock brake system works properly, the light turns off after a few seconds. Thereafter, if the system malfunctions, the light comes on again.

When the "ABS" warning light is on (and the brake system warning light is off), the anti–lock brake system does not operate, but the brake system still operates conventionally.

When the "ABS" warning light is on (and the brake system warning light is off), the anti–lock brake system does not operate so that the wheels could lock up during a sudden braking or braking on slippery road surfaces.

If either of the following conditions occurs, this indicates a malfunction somewhere in the parts monitored by the warning light system. Contact your Toyota dealer as soon as possible to service the vehicle.

- The light does not come on when the ignition key is turned to the "ON" position, or remains on.
- The light comes on while you are driving.

A warning light turning on briefly during operation does not indicate a problem.

⚠ CAUTION

If the "ABS" warning light remains on together with the brake system warning light, immediately stop your vehicle at a safe place and contact your Toyota dealer.

In this case, not only the anti–lock brake system will fail but also the vehicle will become extremely unstable during braking.

Either of the following conditions may occur, but does not indicate the malfunction:

- The light may stay on for about 60 seconds after the ignition key is turned to the "ON" position. It is normal if it turns off after a while.
- Depressing the brake pedal repeatedly may turn on the light. It is normal if it turns off after a few seconds.

Brake pad wear limit indicators

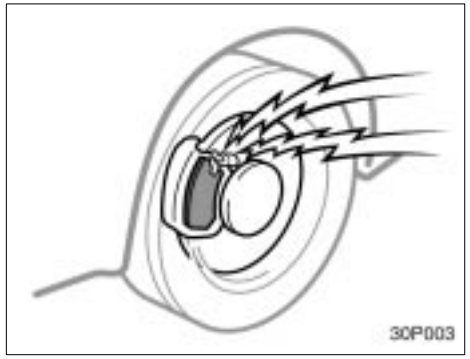

The brake pad wear limit indicators on your disc brakes give a warning noise when the brake pads are worn to where replacement is required.

If you hear a squealing or scraping noise while driving, have the brake pads checked and replaced by your Toyota dealer as soon as possible. Expensive rotor damage can result if the pads are not replaced when necessary.

Luggage stowage precautions

When stowing luggage or cargo in the vehicle, observe the following:

- Put luggage or cargo in the trunk when at all possible. Be sure all items are secured in place.
- Be careful to keep the vehicle balanced. Locating the weight as far forward as possible helps maintain balance.
- For better fuel economy, do not carry unneeded weight.

⚠ CAUTION

- **Do not place anything on the package tray behind the rear seatback or luggage cover. Such items may be thrown about and possibly injure people in the vehicle during sudden braking or an accident.**
- **Do not drive with objects left on top of the instrument panel. They may interfere with the driver's field of view. Or they may move during sharp vehicle acceleration or turning, and impair the driver's control of the vehicle. In an accident they may injure the vehicle occupants.**

NOTICE

Do not load the vehicle beyond the vehicle capacity weight given in Section 9.

Your Toyota's identification— —Vehicle identification number

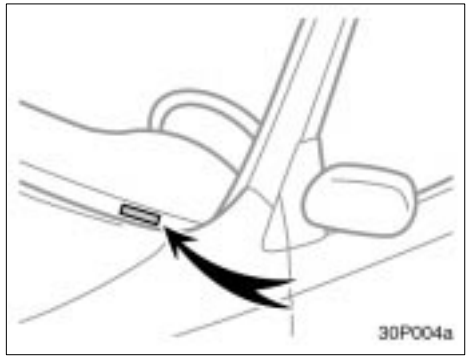

The vehicle identification number (VIN) is the legal identifier for your vehicle. This number is on the left top of the instrument panel, and can be seen through the windshield from outside.

This is the primary identification number for your Toyota. It is used in registering the ownership of your vehicle.

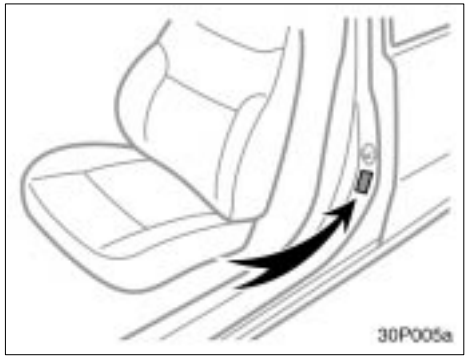

The vehicle identification number (VIN) is also on the Certification Label.

—Engine and motor number

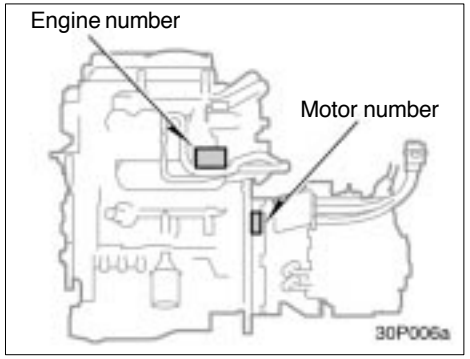

The engine and motor number plates are installed on the engine and trans-axle case as shown.

Theft prevention labels

Your new vehicle carries theft prevention labels which are approximately 56 mm (2.20 in.) by 16 mm (0.63 in.).

The purpose of these labels is to reduce the incidence of vehicle thefts by facilitating the tracing and recovery of parts from stolen vehicles. The label is designed so that once it is applied to a surface, any attempt to remove it will result in destroying the integrity of the label. Transferring these labels intact from one part to another, will be impossible.

NOTICE

You should not attempt to remove the theft prevention labels as it may violate certain state or federal laws.

Suspension and chassis

⚠ CAUTION

Do not modify the suspension/chassis with lift kits, spacers, springs, etc. It can cause dangerous handling characteristics, resulting in loss of control.

Types of tires

Determine what kind of tires your vehicle is originally equipped with.

1. All season tires

All season tires are designed to provide better traction in snow and to be adequate for driving in most winter conditions, as well as for use all year round.

All season tires, however, do not have adequate traction performance compared with snow tires in heavy or loose snow. Also, all season tires fall short in acceleration and handling performance compared with summer tires in highway driving.

2. Summer tires

Summer tires are high–speed capability tires best suited to highway driving under dry conditions.

Since summer tires do not have the same traction performance as snow tires, summer tires are inadequate for driving on snow–covered or icy roads. For driving on snow–covered or icy roads, we recommend using snow tires. If installing snow tires, be sure to replace all four tires.

⚠ CAUTION

- **Do not mix summer and all season tires on your vehicle as this can cause dangerous handling characteristics, resulting in loss of control.**
- **Do not use tire other than the manufacturer's designated tires, and never mix tires or wheels of the sizes different from the originally equipped tires and wheels.**

SECTION 4

STARTING AND DRIVING

Before starting the hybrid system 162
How to start the hybrid system 162
Tips for driving in various conditionss 163
Winter driving tips 164
Dinghy towing 165
Trailer towing 165
How to save fuel and make your vehicle last longer, too 166

Before starting the hybrid system

1. Check the area around the vehicle before entering it.
2. Adjust seat position, seatback angle, head restraint height and steering wheel angle.
3. Adjust the inside and outside rear view mirrors.
4. Lock all doors.
5. Fasten seat belts.

When you get in the vehicle, check whether the "READY" light is on or not.

⚠ CAUTION

Your vehicle does not produce any noise or vibration when the vehicle is ready to start with the "READY" light on. Be careful not to start the vehicle abruptly by depressing the accelerator pedal inadvertently.

How to start the hybrid system— (a) Before starting the hybrid system

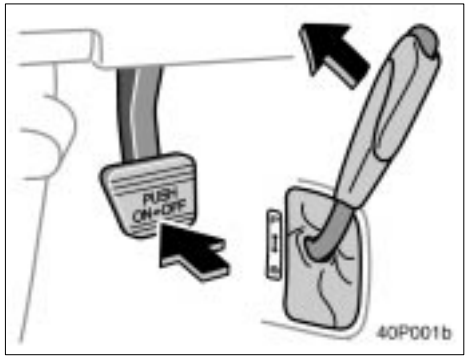

1. Apply the parking brake firmly.
2. Turn off unnecessary lights and accessories.
3. Put the running mode selector lever in "P".
4. Depress the brake pedal and hold it to the floor until driving off.

(b) Turning on the hybrid system

Before starting the hybrid system, be sure to follow the instructions in "(a) Before starting the hybrid system".

Normal starting procedure

Turn and hold the ignition switch to "START" with the brake pedal depressed. The "READY" light starts blinking. After a few seconds, the blinking "READY" light remains on and a beep sounds. (If the ambient temperature is low, such as during winter driving conditions, it may take time until the "READY" light is on.) Then release your hand from the ignition switch.

When the ignition switch is turned to on or off, you may hear a sound coming from the hybrid vehicle battery in the trunk. However, this does not indicate any trouble.

NOTICE

The "READY" light does not come on when the selector lever is put in a position other than "P". Depress the brake pedal and put the selector lever in "P" and turn the ignition switch to "START" again.

If there is a problem somewhere in the hybrid system, the hybrid system malfunction warning light will come on in place of the "READY" light. If this happens, contact Toyota dealer.

NOTICE

When you start the hybrid system at a lowered outside temperature, it may take longer before the blinking "READY" light changes to stay on.

Tips for driving in various conditions

- Always slow down in gusty crosswinds. This will allow you much better control.
- Drive slowly onto curbs and, if possible, at a right angle. Avoid driving onto high, sharp–edged objects and other road hazards. Failure to do so can lead to severe tire damage resulting in tire bursts.
  Drive slowly when passing over bumps or travelling on a bumpy road. Otherwise, the impact could cause severe damage to the tires and/or wheels.
- When parking on a hill, turn the front wheels until they touch the curb so that the vehicle will not roll. Apply the parking brake, and put the selector lever into "P". If necessary, block the wheels.
- Washing your vehicle or driving through deep water may get the brakes wet. To see whether they are wet, check that there is no traffic near you, and then press the pedal lightly. If you do not feel a normal braking force, the brakes are probably wet. To dry them, drive the vehicle cautiously while lightly pressing the brake pedal with the parking brake pulled. If they still do not work safely, pull to the side of the road and call a Toyota dealer for assistance.

⚠ CAUTION

- **Before driving off, make sure the parking brake is fully released and that the parking brake reminder light is off.**
- **Do not leave your vehicle unattended with the "READY" light on.**
- **Do not rest your foot on the brake pedal while driving. It can cause dangerous overheating, needless wear, and poor fuel economy.**
- **To drive down a long or steep hill, reduce your speed and downshift. Remember, if you ride the brakes excessively, they may overheat and not work properly.**
- **Be careful when accelerating or braking on a slippery surface. Sudden acceleration or engine braking, could cause the vehicle to spin or skid.**

- **Do not drive in excess of the speed limit. Even if the legal speed limit permits it, do not drive over 140 km/h (85 mph) unless your vehicle has high–speed capability tires. Driving over 140 km/h (85 mph) may result in tire failure, loss of control and possible injury. Be sure to consult a tire dealer to determine whether the tires on your vehicle are high–speed capability tires or not before driving at such speeds.**
- **Do not continue normal driving when the brakes are wet. If they are wet, your vehicle will require a longer stopping distance, and it may pull to one side when the brakes are applied. Also, the parking brake will not hold the vehicle securely.**

Winter driving tips

Make sure you have a proper freeze protection of coolant.

Your coolant must contain ethylene–glycol type coolant for a proper corrosion protection of aluminum components. Use "TOYOTA Long Life Coolant" or equivalent.

See 210 page in Section 8–2 for details about coolant type selection.

NOTICE
Do not use alcohol type antifreeze or plain water alone.

When it is extremely cold, we recommend to use 60% solution for your Toyota, to provide protection down to about –50°C (–58°F). Do not use more than 70% solution for better coolant performance.

Check the condition of the auxiliary battery and cables.

Cold temperatures reduce the capacity of any auxiliary battery, so it must be in top shape to provide enough power for winter starting. Section 8–3 tells you how to visually inspect the auxiliary battery. Your Toyota dealer will be pleased to check the level of charge.

Make sure the engine oil viscosity is suitable for the cold weather.

See 209 page in Section 8–2 for recommended viscosity. Leaving a heavy summer oil in your vehicle during winter months may cause harder starting. If you are not sure about which oil to use, call your Toyota dealer—he will be pleased to help.

Keep the door locks from freezing.

Squirt lock de–icer or glycerine into the locks to keep them from freezing.

Use a washer fluid containing an anti–freeze solution.

This product is available at your Toyota dealer and most auto parts stores. Follow the manufacturer's directions for how much to mix with water.

NOTICE
Do not use engine antifreeze or any other substitute as washer fluid because it may damage your vehicle's paint.

Do not use your parking brake when there is a possibility it could freeze.

When parking, put the selector lever into “P” and block the rear wheels. Do not use the parking brake, or snow or water accumulated in and around the parking brake mechanism may freeze, making it hard to release.

Keep ice and snow from accumulating under the fenders.

Ice and snow built up under your fenders can make steering difficult. During bad winter driving, stop and check under the fenders occasionally.

Depending on where you are driving, we recommend you carry some emergency equipment.

Some of the things you might put in the vehicle are tire chains, window scraper, bag of sand or salt, flares, small shovel, jumper cables, etc.

Dinghy towing

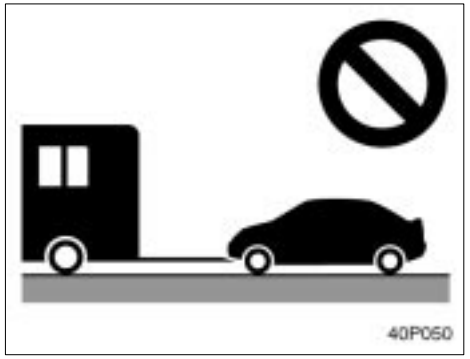

Your vehicle is not designed to be dinghy towed (with four wheels on the ground) behind a motorhome.

NOTICE
Do not tow your vehicle with four wheels on the ground. This may cause serious damage to your vehicle.

Trailer towing

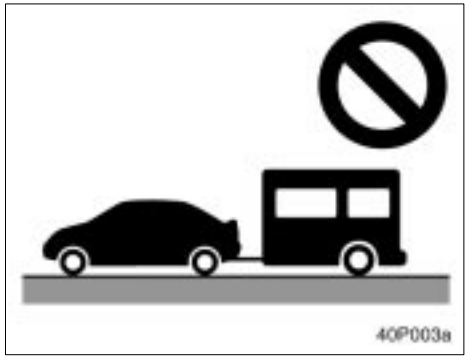

Toyota does not recommend towing a trailer with your Toyota. It is not designed for trailer towing.

How to save fuel and make your vehicle last longer, too

Improving fuel economy is easy–just take it easy. It will help make your vehicle last longer, too. Here are some specific tips on how to save money on both fuel and repairs:

- **Keep your tires inflated at the correct pressure.** Underinflation causes tire wear and wastes fuel. See page 214 in Section 8–2 for instructions.
- **Do not carry unneeded weight in your vehicle.** Excess weight puts a heavier load on the engine, causing greater fuel consumption.
- **Accelerate slowly and smoothly.** Avoid jackrabbit starts.
- **Avoid continuous speeding up and slowing down.** Stop–and–go driving wastes power.
- **Avoid unnecessary stopping and braking.** Maintain a steady pace. Try to time the traffic signals so you only need to stop as little as possible or take advantage of through streets to avoid traffic lights. Keep a proper distance from other vehicles to avoid sudden braking. This will also reduce wear on your brakes.
- **Avoid heavy traffic or traffic jams whenever possible.**
- **Do not rest your foot on brake pedal.** This causes premature wear, overheating and poor fuel economy.
- **Maintain a moderate speed on highways.** The faster you drive, the greater the fuel consumption. By reducing your speed, you will cut down on fuel consumption.
- **Keep the front wheels in proper alignment.** Avoid hitting the curb and slow down on rough roads. Improper alignment not only causes faster tire wear but also puts an extra load on the engine, which, in turn, wastes fuel.
- **Keep the bottom of your vehicle free from mud, etc.** This not only lessens weight but also helps prevent corrosion.
- **Keep your vehicle tuned–up and in top shape**. A dirty air cleaner, improper valve clearance, dirty plugs, dirty oil and grease, brakes not adjusted, etc. all lower engine performance and contribute to poor fuel economy. For longer life of all parts and lower operating costs, keep all maintenance work on schedule, and if you often drive under severe conditions, see that your vehicle receives more frequent maintenance.

⚠ CAUTION

Never turn off the hybrid system to coast down hills. Your power steering and brake booster will not function without the hybrid system running. Also, the emission control system operates properly only when the hybrid system is running.

SECTION 5

IN CASE OF AN EMERGENCY

If your vehicle will not start 168
If your hybrid system stalls while driving 172
If your vehicle overheatss 172
If you have a flat tire 173
If your vehicle needs to be towed 180
If you cannot shift running mode selector lever 182
If you lose your keys 183
If you lose your wireless remote control transmitter 183

If your vehicle will not start—
(a) Simple checks

Before making these checks, make sure you have followed the correct starting procedure given in ”How to start the hybrid system” on page 162 in Section 4 and that you have sufficient fuel. Also check whether the other keys will start the hybrid system. If they work, your key may be broken. Have the key checked at your Toyota dealer. If none of your keys work, the hybrid vehicle immobiliser system is possibly broken. Call your Toyota dealer. (See ”Keys” on page 18 in Section 2–1.)

If the instrument cluster dims or the instrument cluster display turns off with the ignition switch on—

1. Check that the auxiliary battery terminals are tight and clean.
2. If the auxiliary battery terminals are O.K., the auxiliary battery is discharged. You may try jump starting. See “(b) Jump starting” for further instructions.

NOTICE
Hybrid vehicles cannot be push–started.

If the instrument cluster is shown in appropriate brightness with the ignition switch turned to on—

The hybrid vehicle system is suspected to be faulty. Contact your Toyota dealer.

(b) Jump starting

If the auxiliary battery is discharged, the hybrid system can be started by jump starting. Depending on the the vehicle condition, the engine may not start.

To avoid serious personal injury and damage to your vehicle which might result from battery explosion, acid burns, electrical burns, or damaged electronic components, these instructions must be followed precisely.

If you are unsure about how to follow this procedure, we strongly recommend that you seek the help of a competent qualified technician or towing service.

⚠ CAUTION

- **Auxiliary battery and booster battery contain sulfuric acid which is poisonous and corrosive. Wear protective safety glasses when jump starting, and avoid spilling acid on your skin, clothing, or vehicle.**
- **If you should accidentally get acid on yourself or in your eyes, remove any contaminated clothing and flush the affected area with water for immediately. Then get immediate medical attention. If possible, continue to apply water with a sponge or cloth while en route to the medical office.**
- **The gas normally produced by a battery will explode if a flame or spark is brought near. Use only standardized jumper cables and do not smoke or light a match while jump starting.**
- **Warning: Battery posts, terminals and related accessories contain lead and lead compounds, chemicals known to the State of California to cause cancer and reproductive harm. Wash hands after handling.**

NOTICE

The battery used for boosting must be 12 V. Do not jump start unless you are sure that the booster battery is correct.

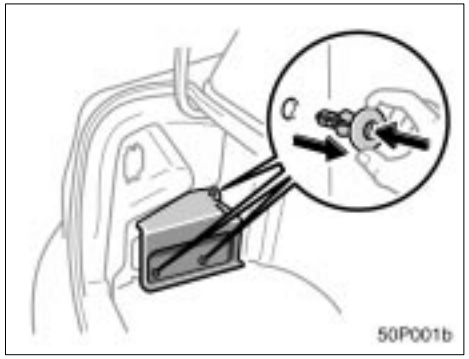

JUMP STARTING PROCEDURE

1. Put the selector lever in “P” and apply the parking brake.
2. Turn off the headlight switch and interior light.
3. Turn the ignition switch to “LOCK” and remove the key from the ignition switch.
4. Open the trunk and remove the 3 clips at the left side of the trunk by pushing the center with a screwdriver. Remove the auxiliary battery cover.

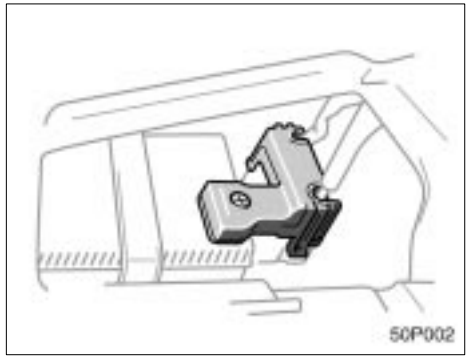

5. Remove the positive terminal cover of the auxiliary battery.
6. If the booster battery is installed in another vehicle, make sure the vehicles are not touching. Turn off all unnecessary lights and accessories.
7. If required, remove all the vent plugs from the booster batteries. Lay a cloth over the open vents on the batteries. (This helps reduce the explosion hazard, personal injuries and burns.)
8. If the engine in the vehicle with the booster battery is not running, start it and let it run for a few minutes. During jump starting, run the engine at about 2000 rpm with the accelerator pedal lightly depressed.

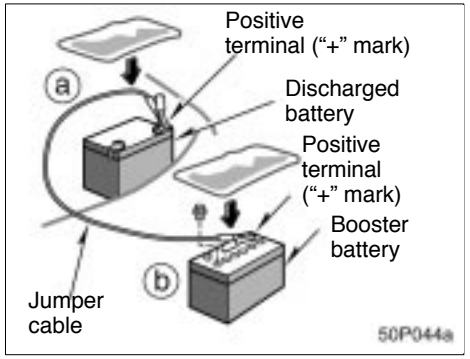

9. Connect the jumper cables in the order a, b, c, d.
   a. Connect the clamp of the positive (red) jumper cable to the positive (+) terminal on the discharged battery.
   b. Connect the clamp at the other end of the positive (red) jumper cable to the positive (+) terminal on the booster battery.

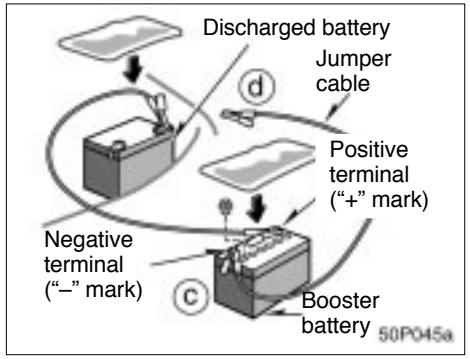

c. Connect the clamp of the negative (black) jumper cable to the negative (–) terminal on the booster battery.

d. Connect the clamp at the other end of the negative (black) jumper cable to a solid, stationary, unpainted, metallic point of the vehicle with the discharged battery.

The recommended connecting point is shown in the following illustrations:

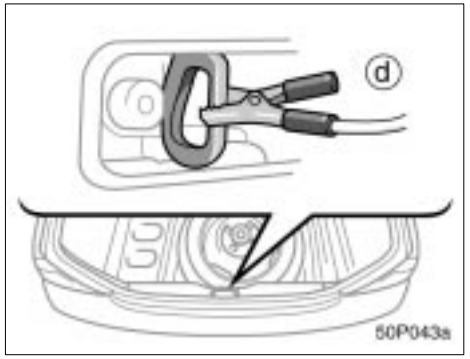

Connecting point

⚠ CAUTION

When making the connections, to avoid serious injury, do not lean over the battery or accidentally let the jumper cables or clamps touch anything except the correct battery terminals or the ground.

10. Start the hybrid system. Make sure the "READY" light is on. If the hybrid vehicle battery warning light comes on in the multi–information display, the hybrid vehicle battery is also discharged. Contact your Toyota dealer.
11. Carefully disconnect the cables in the exact reverse order: the negative cable and then the positive cable.
12. Carefully dispose of the battery cover cloths—they may now contain sulfuric acid.
13. If removed, replace all the battery vent plugs.

If the cause of your auxiliary battery discharging is not apparent (for example, lights left on), you should have it checked.

If your hybrid system stalls while driving

If your hybrid system stalls while driving...

1. Reduce your speed gradually, keeping a straight line. Move cautiously off the road to a safe place.
2. Turn on your emergency flashers.
3. Turn the ignition switch to ”OFF” position, and try starting the hybrid system again.

If the hybrid system will not start, see “If your vehicle will not start” on page 168.

CAUTION

If the hybrid system is not operating, the power assist for the brakes and steering will not work so steering and braking will be much harder than usual.

If your vehicle overheats

If your high coolant temperature warning light comes on, if you experience a loss of power, or if you hear a loud knocking or pinging noise, the hybrid system has probably overheated. You should follow this procedure...

1. Pull safely off the road, stop the vehicle and turn on your emergency flashers. Put the transmission in “P” and apply the parking brake. Turn off the air conditioning if it is being used.
2. If coolant or steam is boiling out of the radiator or reservoir, stop the hybrid system. Wait until the steam subsides before opening the hood. If there is no coolant boiling over or steam, leave the hybrid system running and make sure the electric cooling fan is operating. If it is not, turn the ignition off.

CAUTION

To help avoid personal injury, keep the hood closed until there is no steam. Escaping steam or coolant is a sign of very high pressure.

3. Look for obvious coolant leaks from the radiator, hoses, and under the vehicle. However, note that water draining from the air conditioning is normal if it has been used.

CAUTION

When the hybrid system is running, keep hands and clothing away from the moving fan and engine drive belts.

4. If the coolant is leaking, stop the hybrid system immediately. Call a Toyota dealer for assistance.
5. If there are no obvious leaks, check the coolant reservoir. If it is dry, add coolant to the reservoir while the hybrid system is running. Fill it about half full.

CAUTION

Do not attempt to remove the radiator cap when the hybrid system and radiator are hot. Serious injury could result from scalding hot fluid and steam blown out under pressure.

6. After the coolant temperature has cooled to normal, again check the coolant level in the reservoir. If necessary, bring it up to half full again. Serious coolant loss indicates a leak in the system. You should have it checked as soon as possible at your Toyota dealer.

If you have a flat tire—

1. Reduce your speed gradually, keeping a straight line. Move cautiously off the road to a safe place well away from the traffic. Avoid stopping on the center divider of a highway. Park on a level spot with firm ground.
2. Stop the hybrid system and turn on your emergency flashers.
3. Firmly set the parking brake and put the transmission in “P”.
4. Have everyone get out of the vehicle on the side away from traffic.
5. Read the following instructions thoroughly.

⚠ CAUTION

When jacking, be sure to observe the following to reduce the possibility of personal injury:

- **Follow jacking instructions.**
- **Do not put any part of your body under a vehicle supported by a jack. Personal injury may occur.**
- **Do not start or run the hybrid system while your vehicle is supported by the jack.**
- **Stop the vehicle at a level firm ground, firmly set the parking brake and put the transmission in “P”. Block the wheel diagonally opposite to the one being changed if necessary.**
- **Make sure to set the jack properly in the jack point. Raising the vehicle with jack improperly positioned will damage the vehicle or may allow the vehicle to fall off the jack and cause personal injury.**
- **Never get under the vehicle when the vehicle is supported by the jack alone.**
- **Use the jack only for lifting your vehicle during wheel changing.**
- **Do not raise the vehicle with someone in the vehicle.**
- **When raising the vehicle, do not put an object on or under the jack.**
- **Raise the vehicle only high enough to remove and change the tire.**

NOTICE

Do not continue driving with a deflated tire. Driving even a short distance can damage a tire and wheel beyond repair.

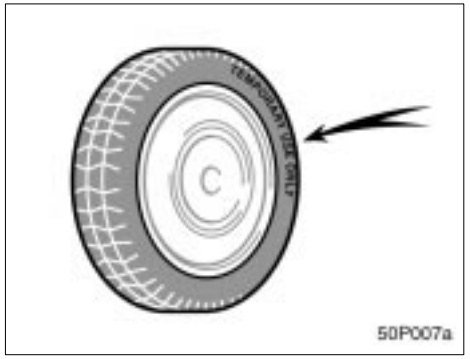

Compact spare tire

The compact spare tire is designed for temporary emergency use only.

The compact spare tire is identified by the distinctive wheel design and color and special wording “TEMPORARY USE ONLY” molded into the side wall of the tire.

The standard tire should be repaired and replaced as soon as possible.

The compact spare tire saves space in your luggage compartment, and its lighter weight helps to improve fuel economy and permits easier installation in case of a flat tire.

The compact spare tire can be used many times, if necessary. It has tread life of up to 4800 km (3000 miles) depending on road conditions and your driving habits. When tread wear indicators appear on the tire, replace the tire.

See also the tire section on page 215 in Section 8–2 for details on the tread wear indicators and other service information.

⚠ CAUTION

- **The compact spare tire was designed especially for your Toyota. Do not use it on any other vehicle.**
- **Do not use more than one compact spare tire at the same time.**
- **Do not exceed 80 km/h (50 mph) when driving with the compact spare tire.**
- **Avoid sudden acceleration, sudden deceleration and sharp turns with the compact spare tire.**

—Required tools and spare tire

NOTICE
Your ground clearance is reduced when the compact spare tire is installed so avoid driving over obstacles and drive slowly on rough, unpaved roads and speed bumps. Also, do not attempt to go through an automatic car wash as the vehicle may get caught, resulting in damage.

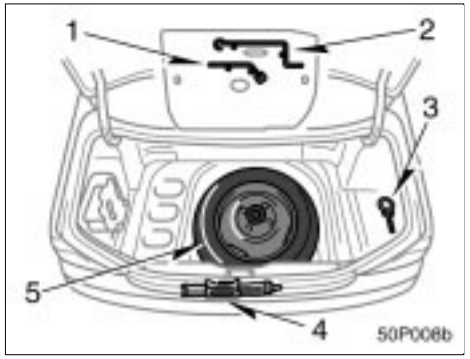

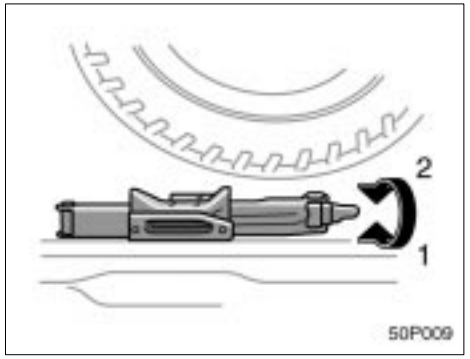

1. **Get the required tools and spare tire.**
   1 Wheel nut wrench
   2 Jack handle
   3 Towing eyelet (For emergency towing)
   4 Jack
   5 Spare tire

To prepare yourself for an emergency, you should familiarize yourself with the use of the jack, each of the tools and their storage locations.

Turn the jack joint by hand.

To remove: Turn the joint in direction 1 until the jack is free.

To store: Turn the joint in direction 2 until the jack is firmly secured to prevent it flying forward during a collision or sudden braking.

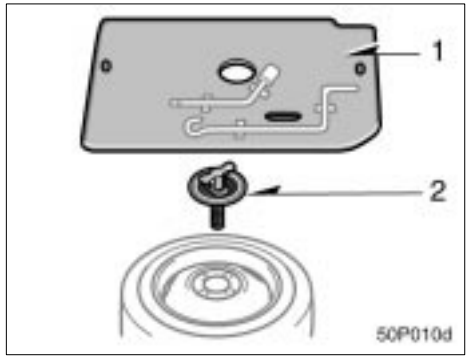

To remove the spare tire:

1. Raise the luggage compartment floor.
2. Loosen the bolt with spacer and remove it.

Then take the spare tire out of the vehicle.

When storing the spare tire, put it in place with the outer side of the wheel facing up. Then secure the tire by repeating the above removal steps in reverse order to prevent it from flying forward during a collision or sudden braking.

—Blocking the wheel

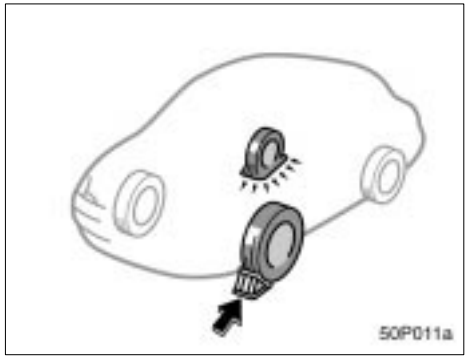

2. Block the wheel diagonally opposite the flat tire to keep the vehicle from rolling when it is jacked up.

When chocking the wheel, place a wheel block from the front for the front wheels or from the rear for the rear wheels.

—Loosening wheel nuts

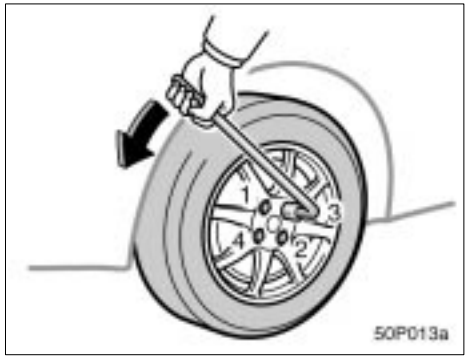

3. Loosen all the wheel nuts.

Always loosen the wheel nuts before raising the vehicle.

Turn the wheel nuts counterclockwise to loosen them. To get maximum leverage, fit the wrench to the nut so that the handle is on the right side, as shown above. Grab the wrench near the end of the handle and pull up on the handle. Be careful that the wrench does not slip off the nut.

Do not remove the nuts yet—just unscrew them about one–half turn.

—Positioning the jack

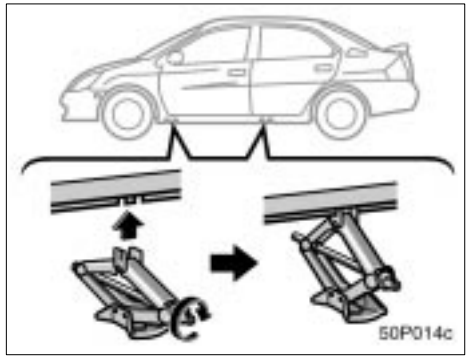

4. Position the jack at the jack points as shown.

Make sure the jack is positioned on a level and solid place.

—Raising your vehicle

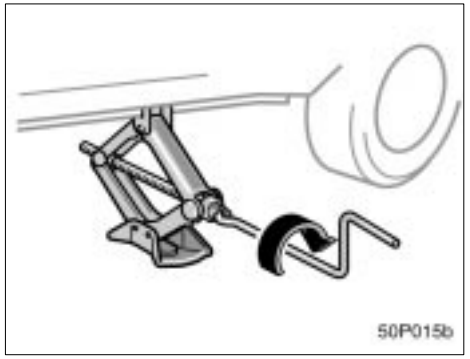

5. After making sure no one is in the vehicle, raise it high enough so that the spare tire can be installed.

Remember you will need more ground clearance when putting on the spare tire than when removing the flat tire.

To raise the vehicle, insert the jack handle into the jack (it is a loose fit) and turn it clockwise. As the jack touches the vehicle and begins to lift, double–check that it is properly positioned.

⚠ CAUTION

Never get under the vehicle when the vehicle is supported by the jack alone.

—Changing wheels

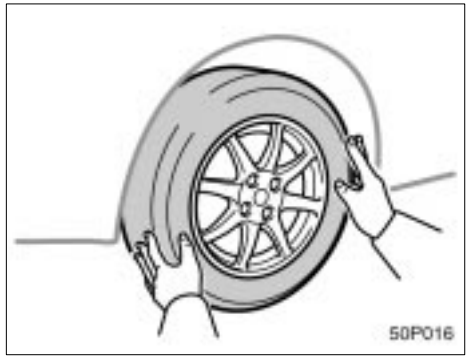

6. Remove the wheel nuts and change tires.

Lift the flat tire straight off and put it aside.

Roll the spare wheel into position and align the holes in the wheel with the bolts. Then lift up the wheel and get at least the top bolt started through its hole. Wiggle the tire and press it back over the other bolts.

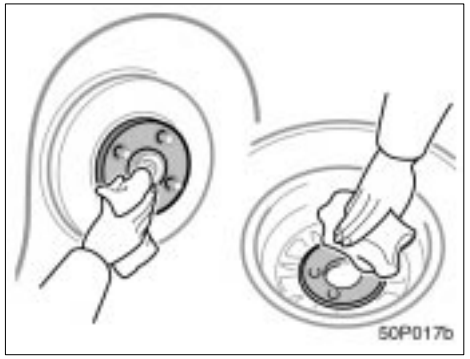

Before putting on wheels, remove any corrosion on the mounting surfaces with a wire brush or such. Installation of wheels without good metal–to–metal contact at the mounting surface can cause wheel nuts to loosen and eventually cause a wheel to come off while driving. Therefore after the first 1600 km (1000 miles), check to see that the wheel nuts are tight.

—Reinstalling wheel nuts

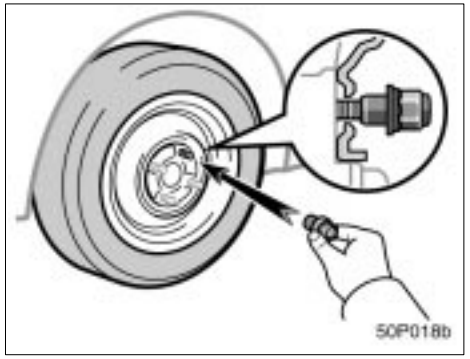

7. Reinstall all the wheel nuts finger tight.

Reinstall the wheel nuts (tapered end inward) and tighten them as much as you can by hand. Press back on the tire and see if you can tighten them more.

—Lowering your vehicle

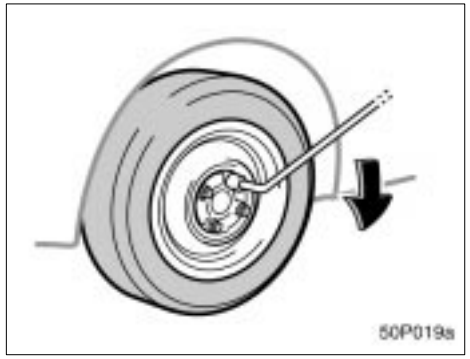

8. Lower the vehicle completely and tighten the wheel nuts.

Turn the jack handle counterclockwise to lower the vehicle.

Use only the wheel nut wrench to tighten the nuts. Do not use other tools or any additional leverage other than your hands, such as a hammer, pipe or your foot. Make sure the wrench is securely engaged over the nut.

Tighten each nut a little at a time in the order shown. Repeat the process until all the nuts are tight.

⚠ CAUTION

When lowering the vehicle, make sure all portions of your body and all other persons around will not be injured as the vehicle is lowered to the ground.

—After changing wheels

9. Check the air pressure of the replaced tire.

Adjust the air pressure to the specification designated on page 237 in Section 9. If the pressure is lower than specified, drive slowly to the nearest Toyota dealer and fill to the correct pressure.

Do not forget to reinstall the tire inflation valve cap as dirt and moisture could get into the valve core and possibly cause air leakage. If the cap is missing, have a new one put on as soon as possible.

10. Restow all the tools, jack and flat tire securely.

As soon as possible after changing wheels, tighten the wheel nuts to the torque specified on page 237 in Section 9 with a torque wrench. Have a technician repair the flat tire and replace the spare tire with it.

⚠ CAUTION

Before driving, make sure all the tools, jack and flat tire are securely in place in their storage location to reduce the possibility of personal injury during a collision or sudden braking.

If your vehicle needs to be towed—

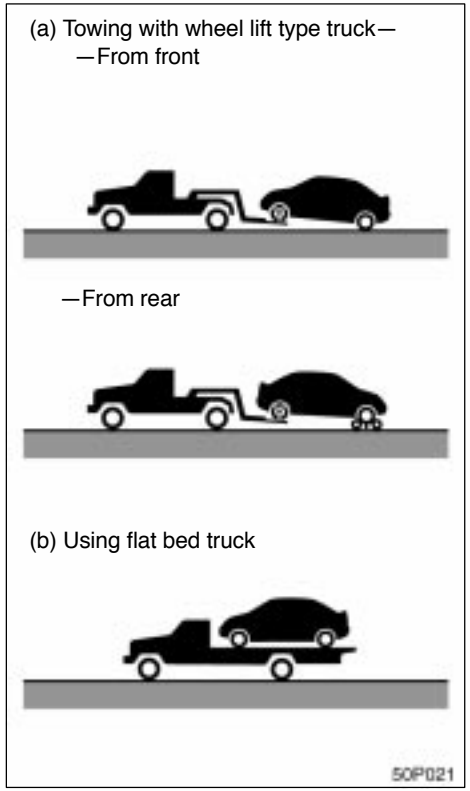

If towing is necessary, we recommend you to have it done by your Toyota dealer or a commercial tow truck service. In consultation with them, have your vehicle towed using either (a) or (b).

Only when you cannot receive a towing service from a Toyota dealer or commercial tow truck service, tow your vehicle carefully in accordance with the instructions given in "—Emergency towing" on page 181 in this Section.

Proper equipment will help ensure that your vehicle is not damaged while being towed. Commercial operators are generally aware of the state/provincial and local laws pertaining to towing.

Your vehicle can be damaged if it is towed incorrectly. Although most operators know the correct procedure, it is possible to make a mistake. To avoid damage to your vehicle, make sure the following precautions are observed. If necessary, show this page to the tow truck driver.

TOWING PRECAUTIONS:

Use a safety chain system for all towing, and abide by the state/provincial and local laws. The wheels and axle on the ground must be in good condition. If they are damaged, use a towing dolly.

(a) Towing with wheel lift type truck

From front—Release the parking brake.

NOTICE
When lifting wheels, take care to ensure adequate ground clearance for towing at the opposite end of the raised vehicle. Otherwise, the underbody of the towed vehicle will be damaged during towing.

From rear—Use a towing dolly under the front wheels.

NOTICE
Never tow a vehicle from the rear with the front wheels on the ground, as this may cause serious damage to the transmission.

(b) Using flat bed truck

—Emergency towing

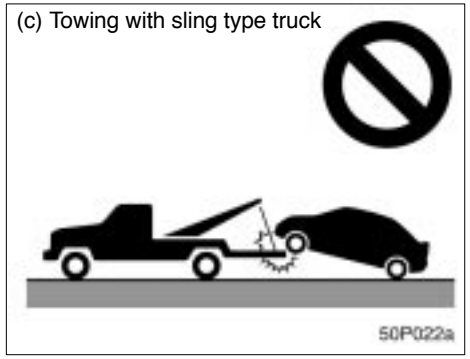

(c) Towing with sling type truck

NOTICE
Do not tow with sling type truck, either from the front or rear. This may cause body damage.

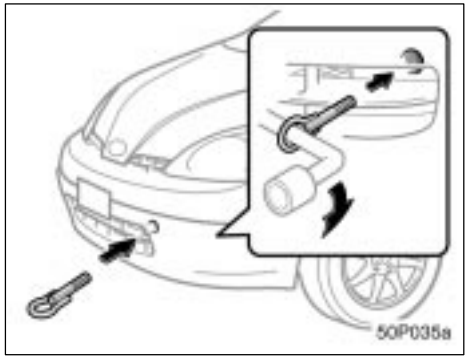

Front

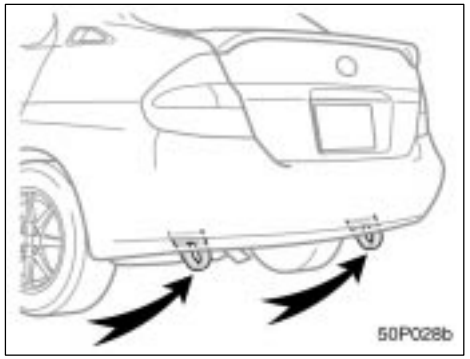

Rear

If towing is necessary, we recommend you to have it done by your Toyota dealer or a commercial tow truck service.

If towing service is not available in an emergency, your vehicle may be temporarily towed by a cable or chain secured to emergency towing eyelet inside of front bumper. Use extreme caution when towing vehicles.

The front towing eyelet is provided in the trunk. (For the front towing eyelet storage location, see "—Required tools and spare tire" on page 175.)

NOTICE
Only use specified towing eyelet; otherwise your vehicle may be damaged.

A driver must be in the vehicle to steer it and operate the brakes.

Towing in this manner may be done only on hard–surfaced roads for a short distance and at low speeds. Also, the wheels, axles, drive train, steering and brakes must all be in good condition.

⚠ CAUTION

- **Use extreme caution when towing vehicles. Avoid sudden starts or erratic driving maneuvers which would place excessive stress on the emergency towing eyelet and towing cable or chain. The eyelet and towing cable or chain may break and cause serious injury or damage.**
- **In case of installing the front eyelet on the vehicle, be sure to tighten in the front eyelet securely. If the tightening is loose, it may come off when towing and result in death or serious injury to the passenger in the front vehicle or damage to that vehicle.**

NOTICE

Use only a cable or chain specifically intended for use in towing vehicles. Securely fasten the cable or chain to the towing eyelet provided.

Before towing, release the parking brake and put the selector lever in “N”. The key must be in “ACC” (hybrid system off) or “ON” (hybrid system on).

⚠ CAUTION

If the hybrid system is not running, the power assist for the brakes and steering will not work so steering and braking will be much harder than usual.

If you cannot shift running mode selector lever

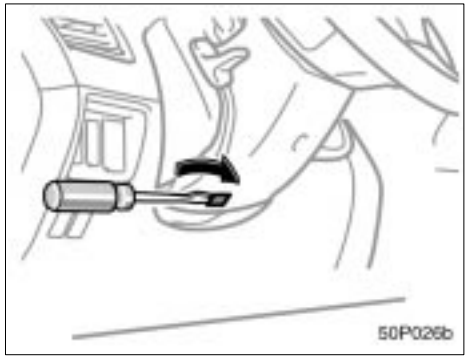

If you cannot shift the selector lever out of “P” position to other positions even though the brake pedal is depressed, use the shift lock override button as follows:

1. **Turn the ignition key to “LOCK” position. Make sure the parking brake is applied.**
2. **Pry up the cover with a flat–bladed screwdriver or equivalent.**

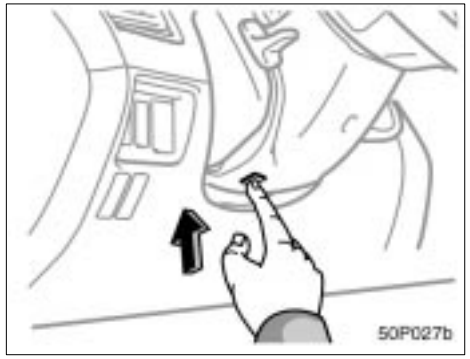

3. **Insert your finger into the hole to push down the shift lock override button. You can shift out of "P" position only while pushing the button.**
4. **Shift into "N" position.**
5. **Insert the cover.**
6. **Start the hybrid system. For your safety, keep the brake pedal depressed.**

Be sure to have the system checked by your Toyota dealer as soon as possible.

If you lose your keys

You can purchase a new key at your Toyota dealer if you can give them the key number and master key.

Even if you lose only one key, contact your Toyota dealer to make a new key. If you lose all your master keys, you cannot make new keys; the whole hybrid vehicle immobiliser system must be replaced.

See the suggestion given in "Keys" on page 18 in Section 2–1.

If your keys are locked in the vehicle and you cannot get a duplicate, many Toyota dealers can still open the door for you, using their special tools. If you must break a window to get in, we suggest breaking the smallest side window because it is the least expensive to replace. Be extremely cautious to avoid cuts from the glass.

If you lose your wireless remote control transmitter

You can purchase a new wireless remote control transmitter at your Toyota dealer.

Have the registered identification numbers of your transmitters deleted from your vehicle by your Toyota dealer as soon as possible to avoid the possibility of theft or an accident. Then, have the identification number of your new transmitter registered. At the same time, you must bring all of the remaining transmitters to have them registered again as well.

You can use the wireless remote control system with the new transmitter. Contact your Toyota dealer for detailed information.

SECTION 6

CORROSION PREVENTION AND APPEARANCE CARE

Protecting your Toyota from corrosion 186
Washing and waxing your Toyota 187
Cleaning the interiorr 189

Protecting your Toyota from corrosion

Toyota, through its diligent research, design and use of the most advanced technology available, has done its part to help prevent corrosion and has provided you with the finest quality vehicle construction. Now, it is up to you. Proper care of your Toyota can help ensure long–term corrosion prevention.

The most common causes of corrosion to your vehicle are:

- The accumulation of road salt, dirt and moisture in hard–to–reach areas under the vehicle.
- Chipping of paint, or undercoating caused by minor accidents or by stones and gravel.

Care is especially important if you live in particular areas or operate your vehicle under certain environmental conditions:

- Road salt or dust control chemicals will accelerate corrosion, as will the presence of salt in the air near the sea–coast or in areas of industrial pollution.
- High humidity accelerates corrosion especially when temperatures range just above the freezing point.
- Wetness or dampness to certain parts of your vehicle for an extended period of time, may cause corrosion even though other parts of the vehicle may be dry.
- High ambient temperatures can cause corrosion to those components of the vehicle which are prevented from quick–drying due to lack of proper ventilation.

The above signifies the necessity to keep your vehicle, particularly the underside, as clean as possible and to repair any damage to paint or protective coatings as soon as possible.

To help prevent corrosion on your Toyota, follow these guidelines:

Wash your vehicle frequently. It is, of course, necessary to keep your vehicle clean by regular washing, but to prevent corrosion, the following points should be observed:

- If you drive on salted roads in the winter or if you live near the ocean, you should hose off the undercarriage at least once a month to minimize corrosion.
- Pay particular attention to the vehicle's underside and wheel housings as it is difficult to see all the mud and dirt. It will do more harm than good to simply wet the mud and debris without removing them. The lower edge of doors, rocker panels and frame members have drain holes which should not be allowed to clog with dirt as trapped water in these areas can cause corrosion.
- Wash the underside of the vehicle thoroughly when winter is over.

See "Washing and waxing your Toyota" for more tips.

Check the condition of your vehicle's paint and trim. If you find any chips or scratches in the paint, touch them up immediately to prevent corrosion from starting. If the chips or scratches have gone through the bare metal, have a qualified body shop make the repair.

Check the interior of your vehicle. Water and dirt can accumulate under the floor mats and could cause corrosion. Occasionally check under the mats to make sure the area is dry. Be particularly careful when transporting chemicals, cleansers, fertilizers, salt, etc.; these should be transported in proper containers. If a spill or leak should occur, immediately clean and dry the area.

Keep your vehicle in a well ventilated garage or a roofed place. Do not park your vehicle in a damp, poorly ventilated garage. If you wash your vehicle in the garage, or if you drive it in covered with water or snow, your garage may be so damp it will cause corrosion. Even if your garage is heated, a wet vehicle can corrode if the ventilation is poor.

Washing and waxing your Toyota

Your Toyota is a hybrid vehicle. Pay particular attention when washing your Toyota.

NOTICE

Before washing your Toyota, be sure to observe the following in order to avoid the risk of damage to your vehicle.

- ***Do not bring the tip of the nozzle of the highly–pressurized car wash closer to the air vent on your Toyota. If water enters, the hybrid vehicle battery assembly might be damaged.***
- ***Do not splash water on the electric components in the engine compartment. This may cause the malfunction of the electric components.***

Washing your Toyota

Keep your vehicle clean by regular washing.

The following cases may cause weakness to the paint or corrosion to the body and parts. Wash your vehicle as soon as possible.

- When driving in a coastal area
- When driving on a road sprinkled with antifreeze
- When having coal tar, tree sap, bird droppings and carcass of an insect
- When driving in the areas where there are a lot of smoke, soot, dust, iron dust and chemical substance
- When the vehicle becomes remarkably dirty with dust and mud

Hand–washing your Toyota

Work in the shade and wait until the vehicle body is not hot to the touch.

⚠ CAUTION

When cleaning under floor or chassis, be careful not to injure your hands.

1. Rinse off loose dirt with a hose. Remove any mud or road salt from the underside of the vehicle or in the wheel wells.
2. Wash with a mild car–wash soap, mixed according to the manufacturer's instructions. Use a soft cotton mitt and keep it wet by dipping it frequently into the wash water. Do not rub hard—let the soap and water remove the dirt.

Plastic wheel ornaments: The plastic wheel ornaments are damaged easily by organic substances. If any organic substances splashes an ornament, be sure to wash it off with water and check if the ornament is damaged.

⚠ CAUTION

Do not attach the heavily damaged plastic wheel ornament. It may fly off the wheel and cause accidents while the vehicle is moving.

Aluminum wheels: Use only a mild soap or neutral detergent.

Plastic bumpers: Wash carefully. Do not scrub with abrasive cleaners. The bumper faces are soft.

Road tar: Remove with turpentine or cleaners that are marked safe for painted surfaces.

NOTICE

Do not use organic substances (gasoline kerosene, benzine or strong solvents) which may be toxic or cause damage.

3. Rinse thoroughly—dried soap can cause streaking. In hot weather you may need to rinse each section right after you wash it.
4. To prevent water spots, dry the vehicle using a clean soft cotton towel. Do not rub or press hard—you might scratch the paint.

Automatic car wash

Your vehicle may be washed in an automatic car wash, but remember that the paint can be scratched by some type of brushes, unfiltered washing water, or the washing process itself. Scratching reduces paint durability and gloss, especially on darker colors. The manager of the car wash should be able to advise you whether the process is safe for the paint on your vehicle.

NOTICE

To prevent damage to the antenna, make sure to remove it before driving your Toyota through an automatic car wash.

Waxing your Toyota

Polishing and waxing is recommended to maintain the original beauty of your Toyota's finish.

Once a month or if the vehicle surface does not repel water well, apply wax.

1. Always wash and dry the vehicle before you begin waxing, even if you are using a combined cleaner and wax.
2. Use a good quality polish and wax. If the finish has become extremely weathered, use a car–cleaning polish, followed by a separate wax. Carefully follow the manufacturer's instructions and precautions. Be sure to polish and wax the chrome trim as well as the paint.
3. Wax the vehicle again when water does not bead but remains on the surface in large patches.

NOTICE

Always remove the plastic bumpers if your vehicle is re–painted and placed in a high heat paint waxing booth. High temperatures could damage the bumpers.

Cleaning the interior

⚠ CAUTION

- **Do not wash the vehicle floor with water, or allow water to get onto the floor when cleaning the vehicle interior or exterior. Water may get into audio components or other electrical components above or under the floor carpet (or mat) and cause fire or malfunction; and it may cause body corrosion.**
- **Vehicles with side airbags:**
  Be careful not to splash water or spill liquid on the floor. This may prevent the side airbags from activating correctly, resulting in serious injury.

Vinyl interior

The vinyl upholstery may be easily cleaned with a mild soap or detergent and water.

First vacuum over the upholstery to remove loose dirt. Then, using a sponge or soft cloth, apply the soap solution to the vinyl. After allowing it to soak in for a few minutes to loosen the dirt, remove the dirt and wipe off the soap with a clean damp cloth. If all the dirt do not come off, repeat the procedure. Commercial foaming–type vinyl cleaners are also available which work well. Follow the manufacturer's instructions.

NOTICE
Do not use solvent, thinner, gasoline or window cleaner on the interior.

Carpets

Use a good foam–type shampoo to clean the carpets.

Begin by vacuuming thoroughly to remove as much dirt as possible. Several types of foam cleaners are available; some are in aerosol cans and others are powers or liquids which you mix with water to produce a foam. To shampoo the carpets, use a sponge or brush to apply the foam. Rub in overlapping circles.

Do not apply water—the best results are obtained by keeping the carpet as dry as possible. Read the shampoo instructions and follow them closely.

Seat belts

The seat belts may be cleaned with mild soap and water or with lukewarm water.

Use a cloth or sponge. As you are cleaning, check the belts for excessive wear, fraying, or cuts.

NOTICE
◆ ***Do not use dye or bleach on the belts–it may weaken them.*** ◆ ***Do not use the belts until they become dry.***

Windows

The windows may be cleaned with any household window cleaner.

NOTICE
When cleaning the inside of the windows, be careful not to scratch or damage the heater wires on the rear window.

Air conditioning control panel, car audio, instrument panel, console panel, and switches

Use a soft damp cloth for cleaning.

Soak a clean soft cloth in water or lukewarm water then lightly wipe off dirt.

NOTICE

- ***Do not use organic substances (solvents, kerosene, alcohol, gasoline, etc.) or alkaline or acidic solutions. These chemicals can cause discoloring, staining or peeling of the surface.***
- ***If you use cleaners or polishing agents, make sure their ingredients do not include the substances mentioned above.***
- ***If you use a liquid car freshener, do not apply the liquid onto the vehicle's interior surfaces. It may contain the ingredients mentioned above. Immediately clean any spill using the method mentioned above.***

Leather interior

The leather upholstery may be cleaned with neutral detergent for wool.

Remove dirt using a soft cloth dampened with 5% solution of neutral detergent for wool. Then thoroughly wipe off all traces of detergent with a clean damp cloth.

After cleaning or whenever any part of the leather gets wet, dry with a soft clean cloth. Allow the leather to dry in a ventilated shaded area.

NOTICE

- ***If a stain should fail to come out with a neutral detergent, apply a cleaner that does not contain an organic solvent.***
- ***Never use organic substances such as benzine, alcohol or gasoline, or alkaline or acid solutions for cleaning the leather as these could cause discoloring.***
- ***Use of a nylon brush or synthetic fiber cloth, etc. may scratch the fine grained surface of the leather.***
- ***Mildew may develop on soiled leather upholstery. Be especially careful to avoid oil spots. Try to keep your upholstery always clean.***
- ***Long exposure to direct sunlight may cause the leather surface to harden and shrink. Keep your vehicle in a shaded area, especially in the summer.***
- ***The interior of your vehicle is apt to heat up on hot summer days, so avoid placing on the upholstery items made of vinyl or plastic or containing wax as these tend to stick to leather when warm.***
- ***Improper cleaning of the leather upholstery could result in discoloration or staining.***

If you have any questions about the cleaning of your Toyota, your local Toyota dealer will be pleased to answer them.

SECTION 7

VEHICLE MAINTENANCE AND CARE

Maintenance requirements 194
General maintenance 195
Does your vehicle need repairing?? 197
Emissions inspection and maintenance (I/M) programs 198

For scheduled maintenance information, please refer to the "Scheduled Maintenance Guide" or "Owner's Manual Supplement".

Maintenance requirements

Your Toyota vehicle has been designed for fewer maintenance requirements with longer service intervals to save both your time and money. However, each regular maintenance, as well as day–to–day care, is more important than ever before to ensure smooth, trouble–free, safe, and economical driving.

It is the owner's responsibility to make sure the specified maintenance, including general maintenance service, is performed. Note that both the new vehicle and emission control system warranties specify that proper maintenance and care must be performed. See "Owner's Warranty Information Booklet" or "Owner's Manual Supplement" for complete warranty information.

General maintenance

General maintenance items are those day–to–day care practices that are important to your vehicle for proper operation. It is the owner's responsibility to ensure that the general maintenance items are performed regularly.

These checks or inspections can be done either by yourself or a qualified technician, or if you prefer, your Toyota dealer will be pleased to do them at a nominal cost.

Scheduled maintenance

The scheduled maintenance items listed in the "Scheduled Maintenance Guide" or "Owner's Manual Supplement" are those required to be serviced at regular intervals.

For details of your maintenance schedule, read the "Scheduled Maintenance Guide" or "Owner's Manual Supplement".

It is recommended that only genuine Toyota parts be used for maintenance or for the repair of the emission control system.

The owner may elect to use non–Toyota supplied parts for replacement purposes without invalidating the emission control system warranty. However, use of replacement parts which are not of equivalent quality may impair the effectiveness of the emission control systems.

You may also elect to have maintenance, replacement, or repair of the emission control devices and system performed by any automotive repair establishment or individual without invalidating this warranty. See "Owner's Warranty Information Booklet" or "Owner's Manual Supplement" for complete warranty information.

Where to go for service?

Toyota technicians are well–trained specialists and are kept up to date with the latest service information through technical bulletins, service tips, and in–dealership training programs. They learn to work on Toyotas before they work on your vehicle, rather than while they are working on it.

You can be confident that your Toyota dealer's service department performs the best job to meet the maintenance requirements on your vehicle–reliably and economically.

Your copy of the repair order is proof that all required maintenance has been performed for warranty coverage. And if any problems should arise with your vehicle while under warranty, your Toyota dealer will promptly take care of it. Again, be sure to keep a copy of the repair order for any service performed on your Toyota.

What about do–it–yourself maintenance?

Many of the maintenance items are easy to do yourself if you have a little mechanical ability and a few basic automotive tools. Simple instructions for how to perform them are presented in Section 8.

If you are a skilled do–it–yourself mechanic, the Toyota service manuals are recommended. Please be aware that do–it–yourself maintenance can affect your warranty coverage. See ”Owner’s Warranty Information Booklet” or ”Owner’s Manual Supplement” for the details.

General maintenance

Listed below are the general maintenance items that should be performed as frequently as specified. In addition to checking the items listed, if you notice any unusual noise, smell or vibration, you should investigate the cause or take your vehicle to your Toyota dealer or a qualified service shop immediately. It is recommended that any problem you notice be brought to the attention of your dealer or the qualified service shop for their advice.

⚠ CAUTION

Make these checks only where adequate ventilation can be obtained if you run the engine.

OUTSIDE THE VEHICLE

Items listed below should be performed from time to time, unless otherwise specified.

Tire pressure
Check the pressure with a gauge every two weeks, or at least once a month. See page 214 in Section 8–2 for additional information.

Tire surface and wheel nuts
Check the tires carefully for cuts, damage or excessive wear. See Section 8–2 for additional information. When checking the tires, make sure no nuts are missing, and check the nuts for looseness. Tighten them if necessary.

Tire rotation
Rotate the tires according to the maintenance schedule. (For scheduled maintenance information, please refer to the “Scheduled Maintenance Guide” or “Owner’s Manual Supplement”.) See page 216 in Section 8–2 for additional information.

Fluid leaks
Check underneath for leaking fuel, oil, water or other fluid after the vehicle has been parked for a while. If you smell fuel fumes or notice any leak, have the cause found and corrected immediately.

Doors and engine hood
Check that all doors and trunk operate smoothly and all latches lock securely. Make sure the engine hood secondary latch secures the hood from opening when the primary latch is released.

INSIDE THE VEHICLE

Items listed below should be checked regularly, e.g. while performing periodic services, cleaning the vehicle, etc.

Lights
Make sure the headlights, stop lights, tail lights, turn signal lights, and other lights are all working. Check headlight aim.

Service reminder indicators and warning buzzers
Check that all service reminder indicators and warning buzzers function properly.

Steering wheel
Be alert for changes in steering condition, such as hard steering or strange noise.

Seats
Check that all front seat controls such as seat adjusters, seatback recliner, etc. operate smoothly and that all latches lock securely in any position. Check that the head restraint move up and down smoothly and that the locks hold securely in any latched position. For folding–down rear seatbacks, check that the latches lock securely.

Seat belts
Check that the seat belt system such as buckles, retractors and anchors operate properly and smoothly. Make sure the belt webbing is not cut, frayed, worn or damaged.

Accelerator pedal
Check the pedal for smooth operation and uneven pedal effort or catching.

Brake pedal
Check the pedal for smooth operation and that the pedal has the proper clearance. Check the brake booster function.

Brakes
At a safe place, check that the brakes do not pull to one side when applied.

Parking brake
Check that the pedal has the proper travel and that, on a safe incline, your vehicle is held securely with only the parking brake applied.

Hybrid transaxle ”Park” mechanism
Check the lock release button of the selector lever for proper and smooth operation. On a safe incline, check that your vehicle is held securely with the selector lever in ”P” position and all brakes released.

IN THE ENGINE COMPARTMENT

Items listed below should be checked from time to time, e.g. each time when refueling.

Washer fluid
Make sure there is sufficient fluid in the tank. See page 225 in Section 8–3 for additional information.

Coolant level
Make sure the coolant level is between the ”FULL” and ”LOW” lines on the see–through reservoir when the hybrid system is cold. See page 210 in Section 8–2 for additional information.

Radiator, condenser and hoses
Check that the front of the radiator and condenser are clean and not blocked with leaves, dirt, or insects. See page 211 in Section 8–2 for additional information.

Engine oil level
Check the level on the dipstick with the engine turned off and the vehicle parked on a level spot. See page 208 in Section 8–2 for additional information.

Exhaust system
If you notice any change in the sound of the exhaust or smell exhaust fumes, have the cause located and corrected immediately. (See "Engine exhaust cautions" on page 150 in Section 3.)

Does your vehicle need repairing?

Be on the alert for changes in performance, sounds, and visual tip–offs that indicate service is needed. Some important clues are as follows:

- Engine missing, stumbling, or pinging
- Appreciable loss of power
- Strange engine noises
- A fluid leak under the vehicle (however, water dripping from the air conditioning after use is normal.)
- Change in exhaust sound (This may indicate a dangerous carbon monoxide leak. Drive with the windows open and have the exhaust system checked immediately.)
- Flat–looking tire; excessive tire squeal when cornering; uneven tire wear
- Vehicle pulls to one side when driving straight on a level road
- Strange noises related to suspension movement
- Loss of brake effectiveness; spongy feeling brake pedal; pedal almost touches floor; vehicle pulls to one side when braking
- Coolant temperature continually higher than normal

If you notice any of these clues, take your vehicle to your Toyota dealer as soon as possible. It probably needs adjustment or repair.

⚠ CAUTION

Do not continue driving with the vehicle unchecked. It could result in serious vehicle damage and possibly personal injury.

Emission inspection and maintenance (I/M) programs

Some states have vehicle emission inspection programs which include OBD (On–Board Diagnostics) checks.

The OBD system monitors the operation of the emission control system. When the OBD system determines that a problem exists somewhere in the emission control system, the malfunction indicator lamp comes on. In this case, your vehicle may not pass the I/M test and need to be repaired. Contact your Toyota dealer to service the vehicle.

Even if the malfunction indicator lamp does not come on, your vehicle may not pass the I/M test as readiness codes have not been set in the OBD system.

Readiness codes are automatically set during ordinary driving. However, when the battery is disconnected or run down, the codes are erased. Also, depending on your driving habits, the codes may not be completely set.

Also, if the malfunction indicator lamp had come on recently due to temporary malfunction such as a loose fuel tank cap, your vehicle may not pass the I/M test.

The malfunction indicator lamp will go off after taking several driving trips, but the error code in the OBD system will not be cleared unless about 40 trips or more are taken.

If your vehicle does not pass the I/M test and the malfunction indicator lamp does not come on, contact your Toyota dealer to prepare the vehicle for re–testing.

SECTION 8– 1

DO–IT–YOURSELF MAINTENANCE

Introduction

Engine compartment overview 200
Fuse locations 201
Do–it–yourself service precautions 202
Positioning the jack 204
Parts and tools 205

Engine compartment overview

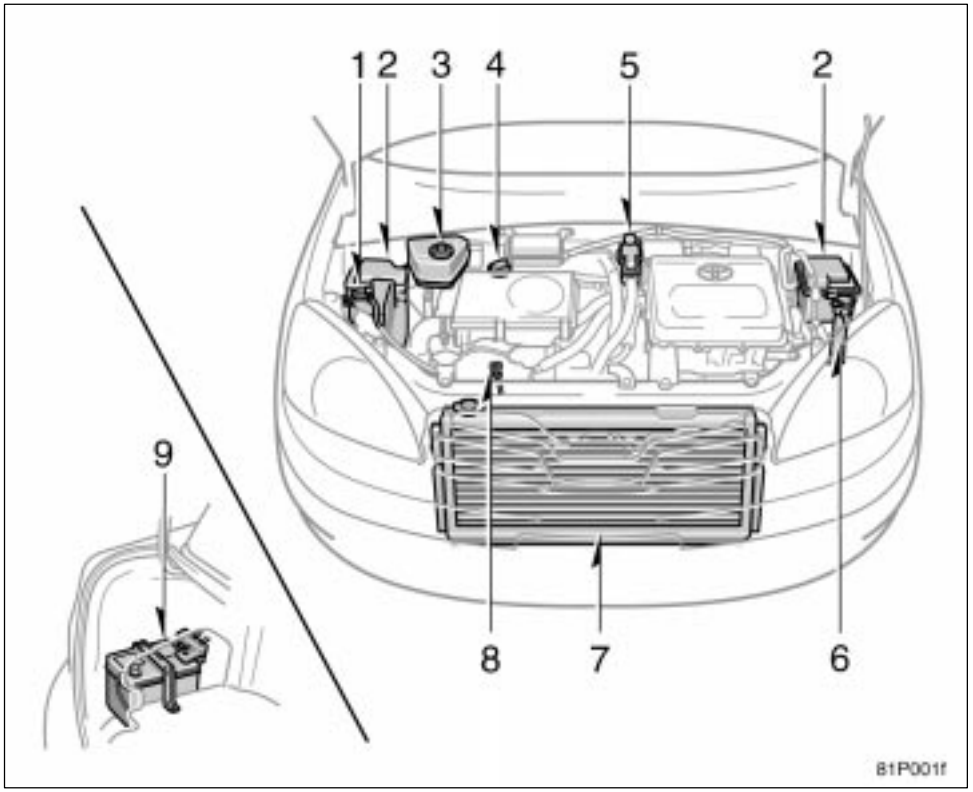

1. Engine coolant reservoir
2. Fuse blocks
3. Brake fluid reservoir
4. Engine oil filler cap
5. Inverter reservoir tank
6. Windshield washer fluid tank
7. Radiator and condenser
8. Engine oil level dipstick
9. Auxiliary battery

Fuse locations

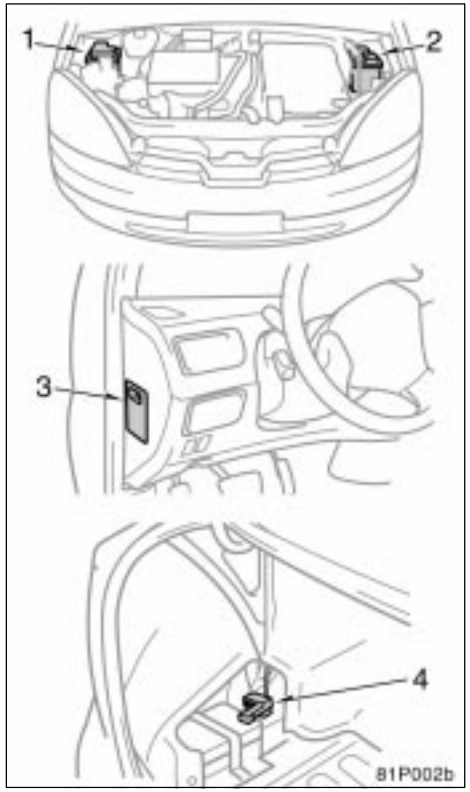

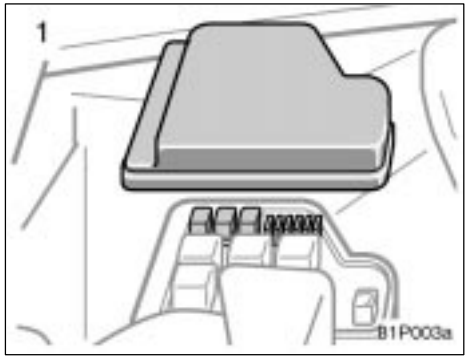

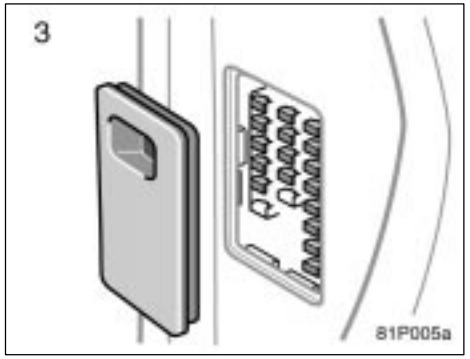

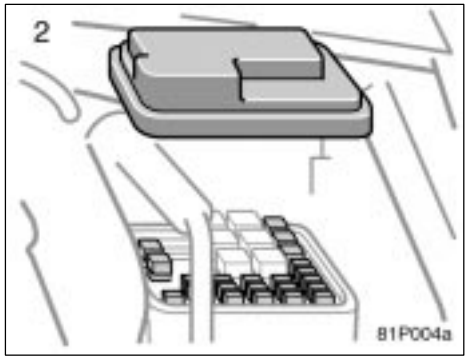

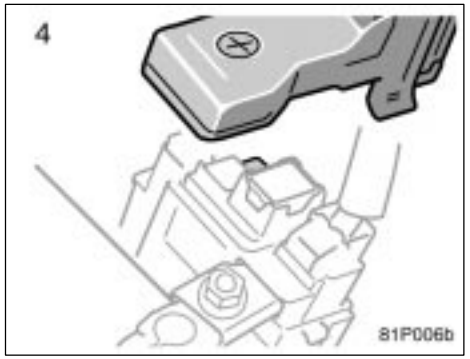

Do–it–yourself service precautions

If you perform maintenance by yourself, be sure to follow the correct procedure given in this Section.

You should be aware that improper or incomplete servicing may result in operating problems.

Performing do–it–yourself maintenance during the warranty period may affect your warranty coverage. Read the separate Toyota Warranty statement for details and suggestions.

This Section gives instructions only for those items that are relatively easy for an owner to perform. As explained in Section 7, there are still a number of items that must be done by a qualified technician with special tools.

For information on tools and parts for do–it–yourself maintenance, see "Parts and tools" on page 205 in this Section.

Utmost care should be taken when working on your vehicle to prevent accidental injury. Here are a few precautions that you should be especially careful to observe:

⚠ CAUTION

- **When the hybrid system is on, keep hands, clothing, and tools away from the moving fan and engine drive belts. (Removing rings, watches, and ties is advisable.)**
- **Right after driving, the engine compartment—the engine, radiator, exhaust manifold and spark plug boots, etc.—will be hot. So be careful not to touch them. Oil, fluids and spark plugs may also be hot.**
- **If the hybrid system is hot, do not remove the radiator cap or loosen the drain plugs to prevent burning yourself.**
- **Do not smoke, cause sparks or allow open flames around fuel or the batteries. Their fumes are flammable.**
- **When the hybrid system is operating with the "READY" light on, the engine is automatically started in some case. When you inspect the engine compartment, be sure to turn the ignition switch to "OFF" position.**
- **Do not get under your vehicle with just the body jack supporting it. Always use automotive jack stands or other solid supports.**
- **Be sure that the ignition is off if you work near the electric cooling fans or radiator grille. With the ignition on, the electric cooling fans will automatically start to run if the engine coolant temperature is high and/or the air conditioning is on.**
- **Use eye protection whenever you work on or under your vehicle where you may be exposed to flying or falling material, fluid spray, etc.**
- **Be extremely cautious when working on the batteries. It contains poisonous and corrosive sulfuric acid or strong alkali.**
- **Warning: Battery posts, terminals and related accessories contain lead and lead compounds, chemicals known to the State of California to cause cancer and reproductive harm. Wash hands after handling.**

- **Used engine oil contains potentially harmful contaminants which may cause skin disorders such as inflammation or skin cancer, so care should be taken to avoid prolonged and repeated contact with it. To remove used engine oil from your skin, wash thoroughly with soap and water.**
- **Do not leave used oil within the reach of children.**
- **Dispose of used oil and filter only in a safe and acceptable manner. Do not dispose of used oil and filter in household trash, in sewers or onto the ground. Call your dealer for information concerning recycling or disposal.**
- **Take care when filling the brake fluid reservoir because brake fluid can harm your eyes and damage painted surfaces. If fluid gets in your eyes, flush your eyes with clean water immediately. If you still feel uncomfortable with your eyes, go to the doctor.**

NOTICE

- ***Remember that batteries and ignition cable carry high currents or voltages. Be careful of accidentally causing a short circuit.***
- ***Add only demineralized or distilled water to fill the radiator. And if you spill some of the coolant, be sure to wash it off with water to prevent it from damaging the parts or paint.***
- ***Do not allow dirt or anything else to fall through the spark plug holes.***
- ***Do not pry the outer electrode of spark plug against the center electrode.***
- ***Use only spark plugs of the specified type. Using other types will cause engine damage, loss of performance or radio noise.***
- ***If you spill the fluid, be sure to wash it off with water to prevent it from damaging the parts or paint.***
- ***Do not drive with the air cleaner filter removed, or excessive engine wear could result. Also backfiring could cause a fire in the engine compartment.***
- ***Be careful not to scratch the glass surface with the wiper frame.***
- ***When closing the hood, check to see that you have not forgotten any tools, rags, etc.***

Positioning the jack

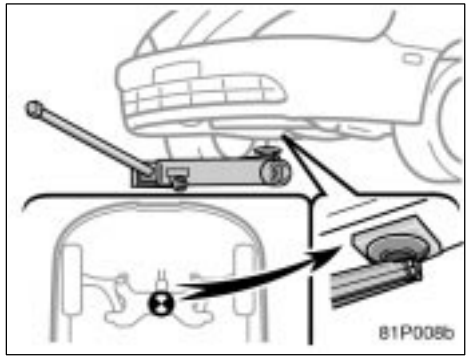

Front

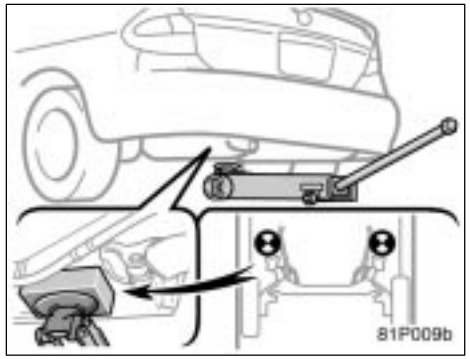

Rear

When jacking up your vehicle with the jack, position the jack correctly as shown in the illustrations.

⚠ CAUTION

When jacking, be sure to observe the following to reduce the possibility of personal injury:

- **Follow jacking instructions.**
- **Do not put any part of your body under the vehicle supported by the jack. Personal injury may occur.**
- **Do not start or run the engine while your vehicle is supported by the jack.**
- **Stop the vehicle on a level firm ground, firmly set the parking brake and put the transmission in "P".**
- **Make sure to set the jack properly in the jack point. Raising the vehicle with jack improperly positioned will damage the vehicle or may allow the vehicle to fall off the jack and cause personal injury.**
- **Never get under the vehicle when the vehicle is supported by the jack alone.**
- **Do not raise the vehicle with someone in the vehicle.**
- **When raising the vehicle, do not put an object on or under the jack.**

NOTICE

Make sure to place the jack correctly, or your vehicle may be damaged.

Parts and tools

Here is a list of parts and tools you will need on performing do–it–yourself maintenance. Remember all Toyota parts are designed in metric sizes, so your tools must be metric.

CHECKING THE ENGINE OIL LEVEL

Parts (if level is low):

- Engine oil API grade SJ "Energy–Conserving", SL "Energy–Conserving" or ILSAC multigrade having viscosity proper for your climate

Tools:

- Rag or paper towel
- Funnel (only for adding oil)

CHECKING THE COOLANT LEVEL

Parts (if level is low):

- "TOYOTA Long Life Coolant" or equivalent
  See page 210 in Section 8–2 for details about coolant type selection.
- Demineralized or distilled water

Tools:

- Funnel (only for adding coolant)

CHECKING BRAKE FLUID

Parts (if level is low):

- SAE J1703 or FMVSS No.116 DOT 3 brake fluid

Tools:

- Rag or paper towel
- Funnel (only for adding fluid)

CHECKING AUXILIARY BATTERY CONDITION

Tools:

- Warm water
- Baking soda
- Grease
- Conventional wrench (for terminal clamp bolts)

CHECKING AND REPLACING FUSES

Parts (if replacement is necessary):

- Fuse with same amperage rating as original

ADDING WASHER FLUID

Parts:

- Water
- Washer fluid containing antifreeze (for winter use)

Tools:

- Funnel

REPLACING LIGHT BULBS

Parts:

- Bulb with same number and wattage rating as original (See charts in "Replacing light bulbs–" on page 225 in Section 8–3.)

Tools:

- Screwdriver

SECTION 8– 2

DO–IT–YOURSELF MAINTENANCE

Engine and Chassis

Checking the engine oil level 208
Checking the coolant level 210
Checking the radiator and condenser 211
Checking brake fluid 211
Checking and replacing the air conditioning filter 212
Checking tire pressure 214
Checking and replacing tires 215
Rotating tires 216
Installing snow tires and chains 217
Replacing wheels 218
Aluminum wheel precautions 219

Checking the engine oil level

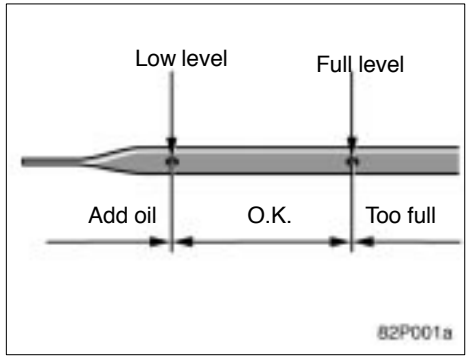

With the hybrid system at operating temperature and turned off, check the oil level on the dipstick.

1. To get a true reading, the vehicle should be on a level spot. After turning off the hybrid system, wait a few minutes for the oil to drain back into the bottom of the engine.
2. Pull out the dipstick, and wipe it clean with a rag.
3. Reinsert the dipstick—push it in as far as it will go, or the reading will not be correct.
4. Pull the dipstick out and look at the oil level on the end.

NOTICE

Make sure to hold a rag under the dipstick, to avoid spilling drops of engine oil when you pull it out.

⚠ CAUTION

Be careful not to touch the hot exhaust manifold.

If the oil level is below or only slightly above the low level, add engine oil of the same type as already in the engine.

Remove the oil filler cap and add engine oil in small quantities at a time, checking the dipstick.

The approximate quantity of oil needed to fill between the low level and the full level on the dipstick is indicated below for reference.

When the level reaches within the correct range, install the filler cap hand–tight.

Oil quantity, L (qt., Imp. qt.):
1.5 (1.6, 1.3)

NOTICE

- ***Be careful not to drop the engine oil on the vehicle components.***
- ***Avoid overfilling, or the hybrid system could be damaged.***
- ***Check the oil level on the dipstick once again after adding the oil.***

ENGINE OIL SELECTION

Use API grade SJ “Energy–Conserving”, SL “Energy–Conserving” or ILSAC multi-grade engine oil.

Recommended viscosity (SAE):

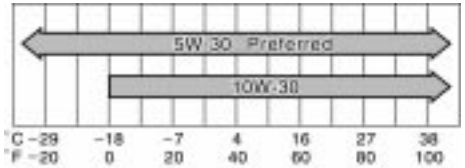

Temperature range anticipated before next oil change

OIL05U

SAE 5W–30 is the best choice for your vehicle, for good fuel economy, and good starting in cold weather.

If you use SAE 10W–30 engine oil in extremely low temperatures, the engine may become difficult to start, so SAE 5W–30 engine oil is recommended.

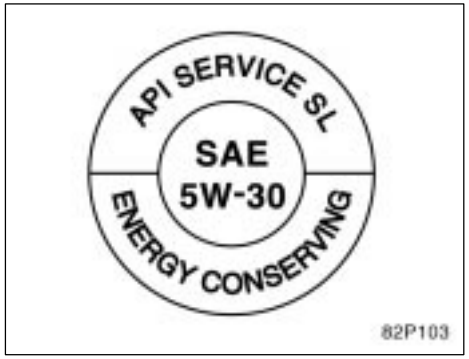

API service symbol

ILSAC certification mark

Oil identification marks

Either or both API registered marks are added to some oil containers to help you select the oil you should use.

The API Service Symbol is located anywhere on the outside of the container.

The top portion of the label shows the oil quality by API (American Petroleum Institute) designations such as SL. The center portion of the label shows the SAE viscosity grade such as SAE 5W–30. “Energy–Conserving” shown in the lower portion, indicates that the oil has fuel–saving capabilities.

The ILSAC (International Lubricant Standardization and Approval Committee) Certification Mark is displayed on the front of the container.

Checking the coolant level

Look at the see–through coolant reservoir when the hybrid system is cold. The coolant level is satisfactory if it is between the "FULL" and "LOW" lines on the reservoir. If the level is low, add ethylene–glycol type coolant for a proper corrosion protection of aluminum components.

The coolant level in the reservoir will vary with hybrid system temperature. However, if the level is on or below the "LOW" line, add coolant. Bring the level up to the "FULL" line.

Always use ethylene–glycol type coolant for a proper corrosion protection of aluminum components. See information in the next column.

If the coolant level drops within a short time after replenishing, there may be a leak in the system. Visually check the radiator, hoses, radiator cap and drain cock and water pump.

If you can find no leak, have your Toyota dealer test the cap pressure and check for leaks in the cooling system.

⚠ CAUTION

To prevent burning yourself, do not remove the radiator cap when the engine is hot.

Coolant type selection

Use of improper coolants may damage your cooling system. Your coolant must contain ethylene–glycol type coolant for a proper corrosion protection of your hybrid system that contains aluminum components. Use "TOYOTA Long Life Coolant" or equivalent.

In addition to preventing freezing and subsequent damage to the hybrid system, this type of coolant will also prevent corrosion. Further supplemental inhibitors or additives are neither needed nor recommended.

Read the coolant container for information on freeze protection. Follow the manufacturer's directions for how much to mix with plain water (preferably demineralized water of distilled water). The total capacity of the cooling system is given on page 236 in Section 9.

We recommend to use 50% solution for your Toyota, to provide protection down to about –35°C (–31°F). When it is extremely cold, to provide protection down to about –50°C (–58°F), 60% solution is recommended. Do not use more than 70% solution for better coolant performance.

NOTICE

Do not use alcohol type antifreeze or plain water alone.

Checking the radiator and condenser

If any of the above parts are extremely dirty or you are not sure of their condition, take your vehicle to Toyota dealer.

⚠ CAUTION

To prevent yourself from burning, be careful not to touch the radiator or condenser when the engine is hot.

NOTICE

To prevent damage to the radiator and condenser, do not perform the work by yourself.

Checking brake fluid

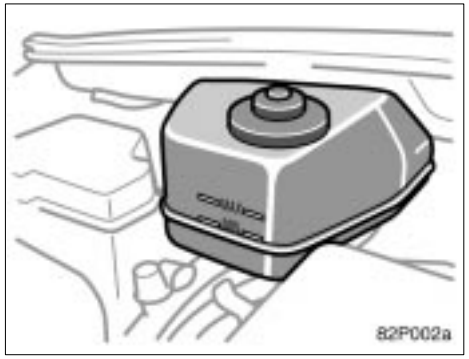

To check the fluid level, simply look at the see–through reservoir. The level should be between the ”MAX” and ”MIN” lines on the reservoir.

It is normal for the brake fluid level to go down slightly as the brake pads wear or when the fluid level in the accumulator is high.

If the reservoir needs frequent refueling, it may indicate a serious mechanical problem.

If the level is low, add SAE J1703 or FMVSS No. 116 DOT 3 brake fluid to the brake reservoir.

Refilling brake fluid:

1. Turn the ignition switch off.
2. Depress the brake pedal more than 40 times.
3. Remove the reservoir cap by hand. Add brake fluid up to the ”MAX” line.

If you do not follow the procedure above, the reservoir may overflow.

Use only newly opened brake fluid. Once opened, brake fluid absorbs moisture from the air, and excess moisture can cause a dangerous loss of braking.

⚠ CAUTION

Take care when filling the reservoir because brake fluid can harm your eyes and damage painted surfaces. If fluid gets in your eyes, flush your eyes with clean water immediately. If you still feel uncomfortable with your eyes, go to the doctor.

NOTICE

If you spill the fluid, be sure to wipe it off to prevent it from damaging the parts or painting.

Checking and replacing the air conditioning filter

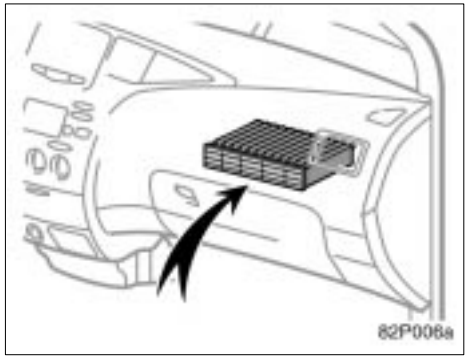

The air conditioning filter may clog after long use. The filter may need to be replaced if the air flow of the air conditioning and heater experiences extreme reductions in operating efficiency, or if the windows become to fog up easily.

The air conditioning filter is set behind the glove box.

To maintain the air conditioning efficiency, inspect and replace the air conditioning filter according to the maintenance schedule.

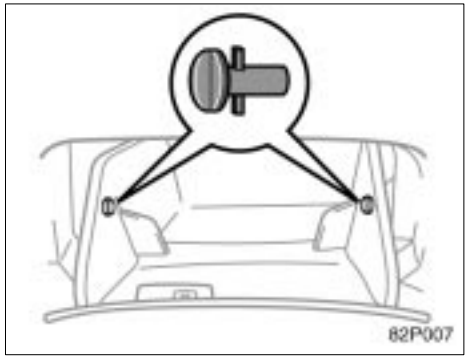

1. **Open the glove box. Turn and pull out 2 pins located on both sides. Pull down the glove box.**

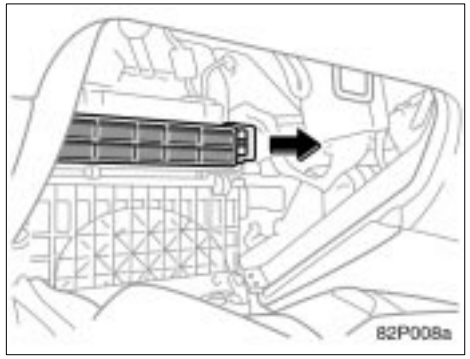

2. **Pull the filter case toward you to take it out.**

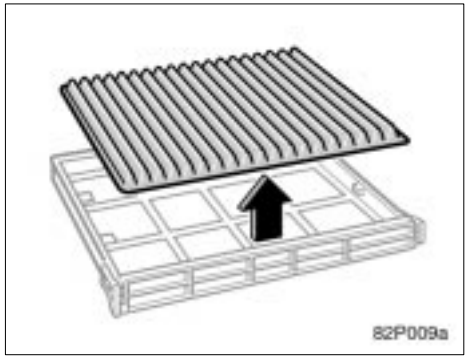

3. **Remove the filter from the filter case and replace it with a new one.**

4. **Install the filter and filter case in the reverse order of removal.**

Set the filter in the filter case correctly.

INFORMATION:

The air filter should be installed properly in position. The use of air conditioning with the air filter removed may cause deteriorated dustproof performance and then affect air conditioning performance.

Checking tire pressure

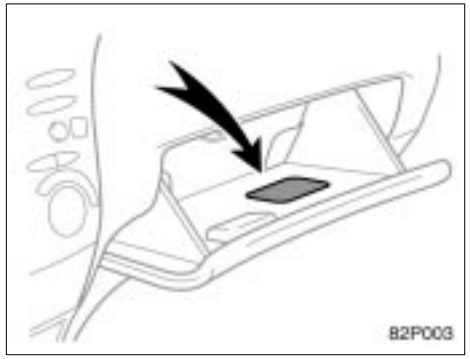

Keep your tire pressures at the proper level.

The recommended cold tire pressures, tire size and the vehicle capacity weight are given on page 237 in Section 9. They are also on the tire pressure label as shown.

You should check the tire pressures every two weeks, or at least once a month. And do not forget the spare!

Incorrect tire pressure can reduce tire life and make your vehicle less safe to drive.

Low tire pressure results in excessive wear, poor handling, reduced fuel economy, and the possibility of blowouts from overheated tires. Also, low tire pressure can cause poor sealing of the tire bead. If the tire pressure is excessively low, there is the possibility of wheel deformation and/or tire separation.

High tire pressure produces a harsh ride, handling problems, excessive wear at the center of the tire tread, and a greater possibility of tire damage from road hazards.

If a tire frequently needs refilling, have it checked by your Toyota dealer.

The following instructions for checking tire pressure should be observed:

- **The pressure should be checked only when the tires are cold.** If your vehicle has been parked for at least 3 hours and has not been driven for more than 1.5 km or 1 mile since, you will get an accurate cold tire pressure reading.
- **Always use a tire pressure gauge.** The appearance of a tire can be misleading. Besides, tire pressures that are even just a few pounds off can degrade ride and handling.
- **Take special care when adding air to the compact spare tire.** The smaller tire size can gain pressure very quickly. Add compressed air in small quantities and check the pressure often until it reaches the specified pressure.
- **Do not bleed or reduce tire pressure after driving.** It is normal for the tire pressure to be higher after driving.
- **Never exceed the vehicle capacity weight.** The passenger and luggage weight should be located so that the vehicle is balanced.
- **Be sure to reinstall the tire inflation valve caps.** Without the valve caps, dirt or moisture could get into the valve core and cause air leakage. If the caps have been lost, have new ones put on as soon as possible.

Checking and replacing tires

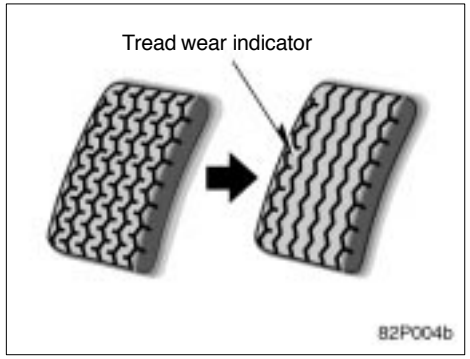

CHECKING YOUR TIRES

Check the tire tread for the tread wear indicators. If the indicators show, replace the tires.

The tires on your Toyota have built–in tread wear indicators to help you know when the tires need replacement. When the tread depth wears to 1.6 mm (0.06 in.) or less, the indicators will appear. If you can see the indicators in two or more adjacent grooves, the tire should be replaced. The lower the tread, the higher the risk of skidding.

The effectiveness of snow tires is lost if the tread wears down below 4 mm (0.16 in.).

Check the tires regularly for damage such as cuts, splits and cracks. If any damage is found, consult with a technician and have the tire repaired or replaced.

Even if the damage does not appear serious, a qualified technician should examine the damage. Objects which have penetrated the tire may have caused internal damage.

Any tires which are over 6 years old must be checked by a qualified technician even if damage is not obvious.

Tires deteriorate with age even if they have never or seldom been used.

This also applies to the spare tire and tires stored for future use.

REPLACING YOUR TIRES

When replacing a tire, use only the same size and construction as originally installed and with the same or greater load capacity.

Using any other size or type of tire may seriously affect handling, ride, speedometer/odometer calibration, ground clearance, and clearance between the body and tires or snow chains.

⚠ CAUTION

- **Do not mix radial, bias belted, or bias–ply tires on your vehicle. It can cause dangerous handling characteristics, resulting in loss of control.**
- **Do not use tires or wheels other than the manufacturer's recommended size.**

NOTICE

Do not use tires of different brands, sizes and constructions. This may damage the drive system.

Toyota recommends all four tires, or at least both front or rear tires be replaced as a set.

See "If you have a flat tire" on page 173 in Section 5 for tire change procedure.

When a tire is replaced, the wheel should always be balanced.

An unbalanced wheel may affect vehicle handling and tire life. Wheels can get out of balance with regular use and should therefore be balanced occasionally.

When replacing a tubeless tire, the air valve should also be replaced with a new one.

Rotating tires

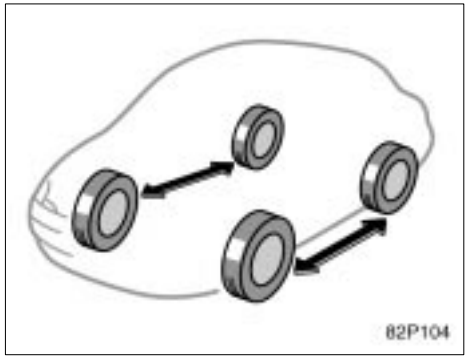

To equalize tire wear and help extend tire life, Toyota recommends that you rotate your tires according to the maintenance schedule. (For scheduled maintenance information, please refer to the "Scheduled Maintenance Guide" or "Owner's Manual Supplement".) However, the most appropriate timing for tire rotation may vary according to your driving habits and road surface conditions.

See "If you have a flat tire" on page 173 in Section 5 for tire change procedure.

When rotating tires, check for uneven wear and damage. Abnormal wear is usually caused by incorrect tire pressure, improper wheel alignment, out–of–balance wheels, or severe braking.

⚠ CAUTION

Do not include a compact spare tire when rotating the tires. It is designed for temporary use only.

Installing snow tires and chains

WHEN TO USE SNOW TIRES OR CHAINS

Snow tires or chains are recommended when driving on snow or ice.

On wet or dry roads, conventional tires provide better traction than snow tires.

SNOW TIRE SELECTION

If you need snow tires, select the same size, construction and load capacity as the original tires on your Toyota.

Do not use tires other than those mentioned above. Do not install studded tires without first checking local regulations for possible restrictions.

SNOW TIRE INSTALLATION

Snow tires should be installed on all wheels.

Installing snow tires on the front wheels only can lead to an excessive difference in road grip capability between the front and rear tires which could cause loss of vehicle control.

When storing removed tires, you should store them in a cool dry place.

Mark the direction of rotation and be sure to install them in the same direction when replacing.

⚠ CAUTION

- **Do not drive with the snow tires incorrectly inflated.**
- **Never drive over 120 km/h (75 mph) with any type of snow tires.**

NOTICE

Do not attempt to use a tire chain on the compact spare tire, as it may result in damage to the vehicles as well as the tire.

TIRE CHAIN SELECTION

Use the tire chains of correct size.

Regulations regarding the use of tire chains vary according to location or type of road, so always check them before installing chains.

CHAIN INSTALLATION

Install the chains on the front tires as tightly as possible. Do not use tire chains on the rear tires. Retighten chains after driving 0.5—1.0 km (1/4—1/2 mile).

When installing chains on your tires, carefully follow the instructions of the chain manufacturer.

If wheel covers are used, they will be scratched by the chain band, so remove the covers before putting on the chains.

⚠ CAUTION

- **Do not exceed 50 km/h (30 mph) or the chain manufacturer's recommended speed limit, whichever is lower.**
- **Drive carefully avoiding bumps, holes, and sharp turns, which may cause the vehicle to bounce.**
- **Avoid sharp turns or locked–wheel braking, as use of chains may adversely affect vehicle handling.**
- **When driving with chains installed, be sure to drive carefully. Slow down before entering the curves to avoid losing control of the vehicle. Otherwise an accident may occur.**

NOTICE

Do not attempt to use a tire chain on the compact spare tire, as it may result in damage to the vehicle as well as the tire.

Replacing wheels

WHEN TO REPLACE YOUR WHEELS

If you have wheel damage such as bending, cracks or heavy corrosion, the wheel should be replaced.

If you fail to replace damaged wheels, the tire may slip off the wheel or cause loss of handling control.

WHEEL SELECTION

When replacing wheels, care should be taken to ensure that the wheels are replaced by ones with the same load capacity, diameter, rim width, and offset.

This must be observed on compact spare tire, too.

Correct replacement wheels are available at your Toyota dealer.

A wheel of a different size or type may adversely affect handling, wheel and bearing life, brake cooling, speedometer/odometer calibration, stopping ability, headlight aim, bumper height, vehicle ground clearance, and tire or snow chain clearance to the body and chassis.

Replacement with used wheels is not recommended as they may have been subjected to rough treatment or high mileage and could fail without warning. Also, bent wheels which have been straightened may have structural damage and therefore should not be used. Never use an inner tube in a leaking wheel which is designed for a tubeless tire.

Aluminum wheel precautions

- When installing aluminum wheels, check that the wheel nuts are tight after driving your vehicle the first 1600 km (1000 miles).
- If you have rotated, repaired, or changed your tires, check that the wheel nuts are still tight after driving 1600 km (1000 miles).
- When using tire chains, be careful not to damage the aluminum wheels.
- Use only the Toyota wheel nuts and wrench designed for your aluminum wheels.
- When balancing your wheels, use only Toyota balance weights or equivalent and a plastic or rubber hammer.
- As with any wheel, periodically check your aluminum wheels for damage. If damaged, replace immediately.

SECTION 8– 3

DO–IT–YOURSELF MAINTENANCE

Electrical components

Checking auxiliary battery condition 222
Auxiliary battery recharging precautionss 223
Checking and replacing fuses 223
Adding washer fluid 225
Replacing light bulbs 225

Checking auxiliary battery condition—
—Precautions

⚠ CAUTION

AUXILIARY BATTERY PRECAUTIONS

When the auxiliary battery must be replaced, use the Prius designated battery.

The auxiliary battery produces flammable and explosive hydrogen gas.

- **Do not cause a spark from the battery with tools.**
- **Do not smoke or light a match near the battery.**

The electrolyte contains poisonous and corrosive sulfuric acid.

- **Avoid contact with eyes, skin or clothes.**
- **Never ingest electrolyte.**
- **Wear protective safety glasses when working near the battery.**
- **Keep children away from the battery.**

EMERGENCY MEASURES

- **If electrolyte gets in your eyes, flush your eyes with clean water and get immediate medical attention. If possible, continue to apply water with a sponge or cloth while en route to the medical office.**
- **If electrolyte gets on your skin, thoroughly wash the contact area. If you feel pain or burn, get medical attention immediately.**
- **If electrolyte gets on your clothes, there is a possibility of its soaking through to your skin, so immediately take off the exposed clothing and follow the procedure above, if necessary.**
- **If you accidentally swallow electrolyte, drink a large quantity of water or milk. Follow with milk of magnesia, beaten raw egg or vegetable oil. Then go immediately for emergency help.**
- **Warning: Battery posts, terminals and related accessories contain lead and lead compounds, chemicals known to the State of California to cause cancer and reproductive harm. Wash hands after handling.**

—Checking auxiliary battery exterior

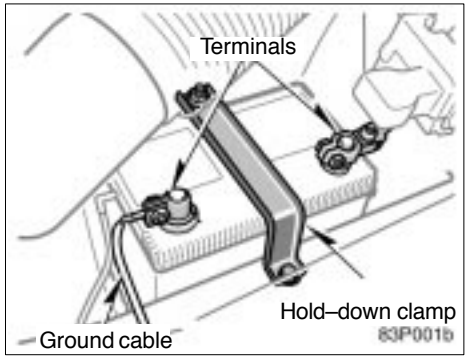

Check the battery for corroded or loose terminal connections, cracks, or loose hold–down clamp.

a. If the battery is corroded, wash it off with a solution of warm water and baking soda. Coat the outside of the terminals with grease to prevent further corrosion.

b. If the terminal connections are loose, tighten their clamp nuts—but do not overtighten.

c. Tighten the hold–down clamp only enough to keep the battery firmly in place. Overtightening may damage the battery case.

NOTICE

- ***Be sure the hybrid system and all accessories are off before performing maintenance.***
- ***When checking the battery, remove the ground cable from the negative terminal ("—" mark) first and reinstall it last.***
- ***Be careful not to cause a short circuit with tools.***
- ***Take care no solution gets into the battery when washing it.***

Auxiliary battery recharging precautions

During recharging, the battery is producing hydrogen gas.

Therefore, before recharging:

1. If recharging with the battery installed on the vehicle, be sure to disconnect the ground cable.
2. Make sure the power switch on the recharger is off when connecting the charger cables to the battery and when disconnecting them.

⚠ CAUTION

- **Always charge the battery in an unconfined area. Do not charge the battery in a garage or closed room where there is not sufficient ventilation.**
- **Only do a slow charge (3.5A or less). Charging at a quicker rate is dangerous. The battery may explode, causing personal injuries.**

NOTICE

Never recharge the battery with the hybrid system on. Also, be sure all accessories are turned off.

Checking and replacing fuses

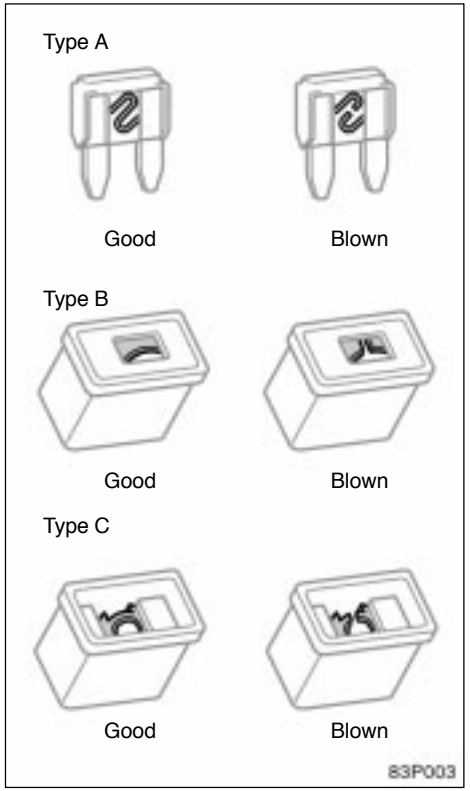

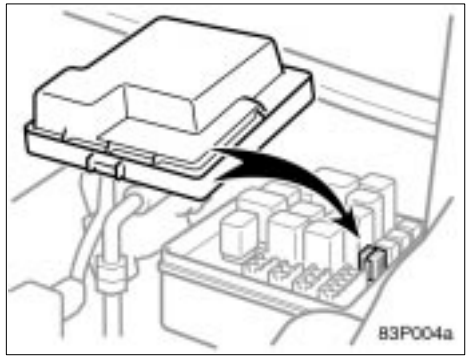

If the headlights or other electrical components do not work, check the fuses. If any of the fuses are blown, they must be replaced.

See “Fuse locations” on page 201 in Section 8–1 for locations of the fuses.

Turn the ignition switch and inoperative component off. Pull a suspected fuse straight out and check it.

Determine which fuse may be causing the problem. The lid of the fuse box shows the name of the circuit for each fuse. See page 237 in Section 9 for the functions controlled by each circuit.

Type A fuses can be pulled out by the pull–out tool. The location of the pull–out tool is shown in the illustration.

If you are not sure whether the fuse has blown, try replacing the suspected fuse with one that you know is good.

If the fuse has blown, push a new fuse into the clip.

Only install a fuse with the amperage rating designated on the fuse box lid.

If you do not have a spare fuse, in an emergency you can pull out the “DOME” or “OBDII” fuse, which may be dispensable for normal driving, and use it if its amperage rating is the same.

If you cannot use one of the same amperage, use one that is lower, but as close as possible to, the rating. If the amperage is lower than that specified, the fuse might blow out again. but this does not indicate anything wrong. Be sure to get the correct fuse as soon as possible and return the substitute to its original clip.

It is a good idea to purchase a set of spare fuses and keep them in your vehicle for emergencies.

If the new fuse immediately blows out, there is a problem with the electrical system. Have your Toyota dealer correct it as soon as possible.

⚠ CAUTION

Never use a fuse with a higher amperage rating, or any other object, in place of a fuse. This may cause extensive damage and possibly a fire.

Adding washer fluid

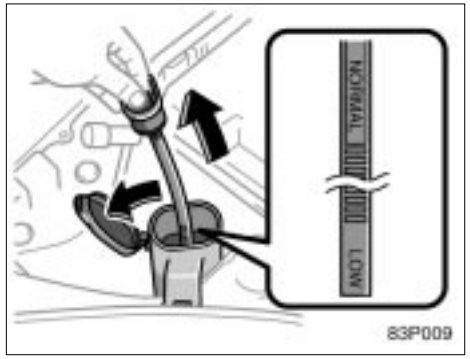

If any washer does not work, the washer tank may be empty. Check the washer fluid level on the level gauge. If the washer fluid level is below "LOW", add washer fluid.

"⇦ FULL" on the side of the washer tank indicates the full level of washer fluid. Do not refill washer fluid over this level.

You may use plain water as washer fluid. However, in cold areas where temperatures range below freezing point, use washer fluid containing antifreeze. This product is available at your Toyota dealer and most auto parts stores. Follow the manufacturer's directions for how much to mix with water.

NOTICE
Do not use engine antifreeze or any other substitute because it may damage your vehicle's paint.

Replacing light bulbs—

The following illustrations show how to gain access to the bulbs. When replacing a bulb, make sure the ignition switch and light switch are off. Use bulbs with the wattage ratings given in the table.

⚠ CAUTION

- **To prevent yourself from burning, do not replace the light bulbs while they are hot.**
- **Halogen bulbs have pressurized gas inside and require special handling. They can burst or shatter if scratched or dropped. Hold a bulb only by its plastic or metal case. Do not touch the glass part of a bulb with bare hands.**

NOTICE
Only use a bulb of the listed type.

The inside of the lens of exterior lights such as headlights may temporarily fog up when the lense becomes wet in the rain or in a car wash. This is not a problem because the fogging is caused by the temperature difference between the outside and inside of the lense, just like the windshield fogged up in the rain. However, if there is a large drop of water on the inside of the lense, or if there is water pooled inside the light, contact your Toyota dealer.

Light bulbs	Bulb No.	W	Type
Headlights	—	60/55	A
Parking lights	947	5	C
Front turn signal lights	—	21	B
Rear turn signal lights	7440	21	C
Stop and tail lights	7443	21/5	C
Back–up lights	921	16	C
License plate lights	—	5	C
High mounted stop-light	9419	5	C
Interior light	—	8	D
Personal light	—	8	B
Trunk light	194	3.8	C

A: HB2 Halogen bulbs

B: Single end bulbs

C: Wedge base bulbs

D: Double end bulbs

—Headlights

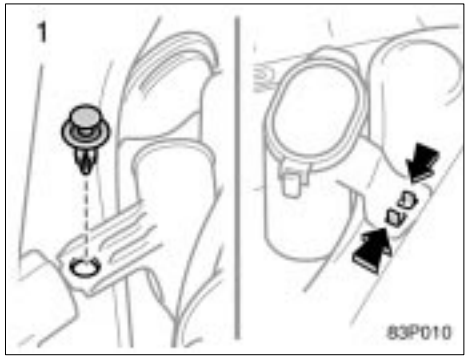

1. **Open the hood.**

   RIGHT–HAND HEADLIGHT: Remove the clip and take out the air cleaner inlet.

   Remove and install the clip as shown in the following illustration.

   LEFT–HAND HEADLIGHT: Remove the upper part of the washer fluid reservoir while pinching the lever.

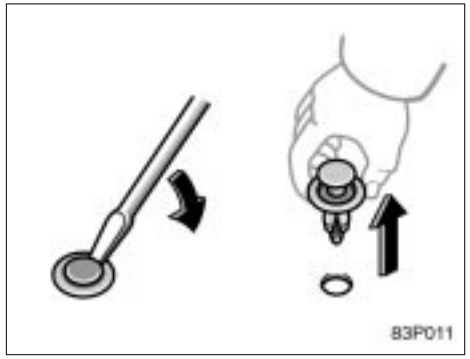

Removing clip

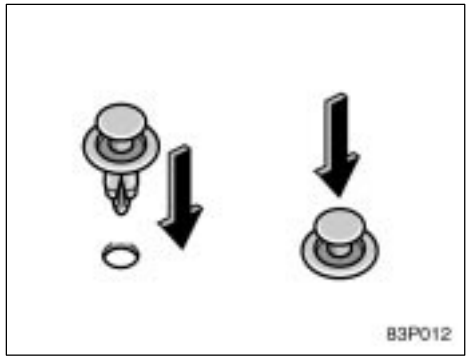

Installing clip

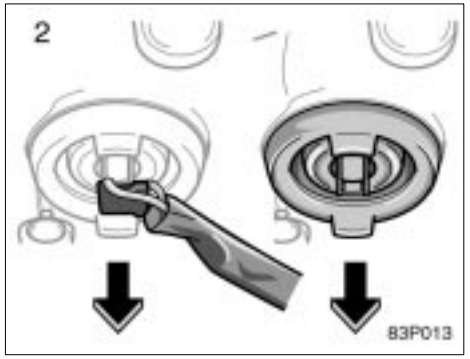

2. Unplug the connector. Remove the rubber cover.

If the connector is tight, wiggle it.

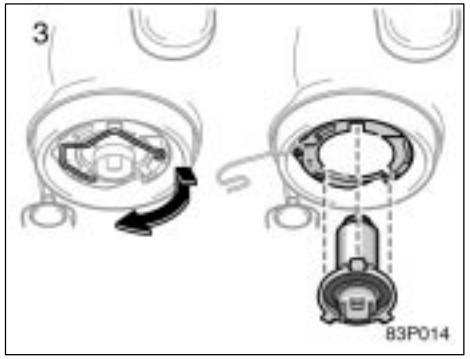

3. Release the bulb retaining spring and remove the bulb along with the socket. Install a new bulb into the socket and return the bulb retaining spring to its original position.

To install a bulb, align the tabs of the bulb with the cutout of the mounting hole.

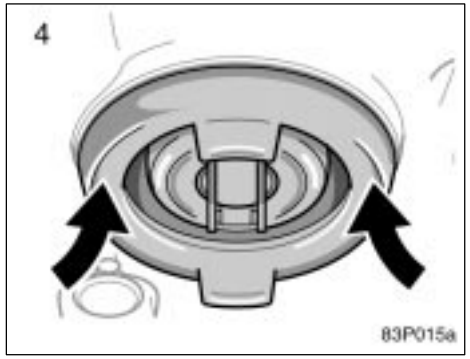

4. Install the rubber cover as shown, and snuggle on the boss. Plug in the connector.

Make sure the rubber cover fits snugly on the connector and the headlight body.

Aiming is not necessary after replacing the bulb. When aiming adjustment is necessary, contact your Toyota dealer.

—Parking lights

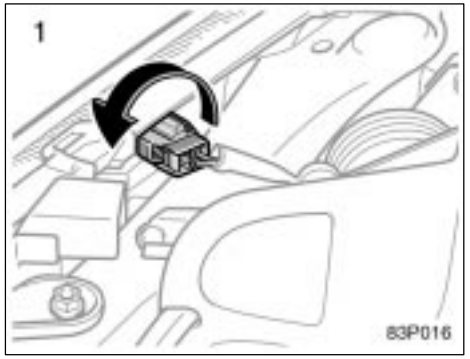

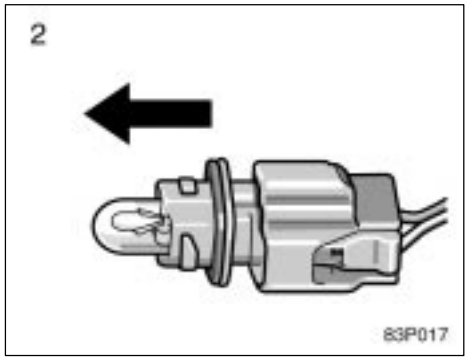

—Front turn signal lights

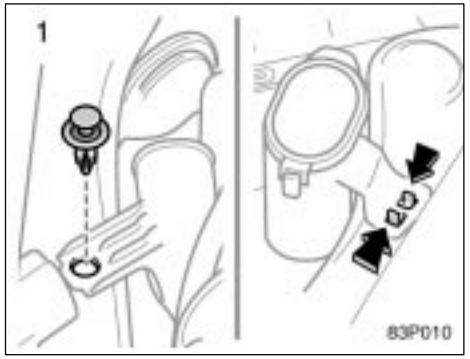

RIGHT–HAND FRONT TURN SIGNAL LIGHT: Remove the clip and take out the air cleaner inlet.

Remove and install the clip as shown in the following illustration.

LEFT–HAND FRONT TURN SIGNAL: Remove the upper part of the washer fluid reservoir while pinching the lever.

—Rear turn signal, stop/tail and back–up lights

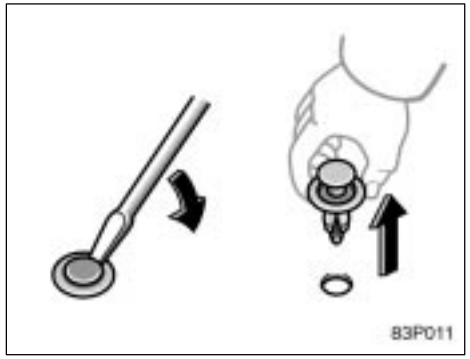

Removing clip

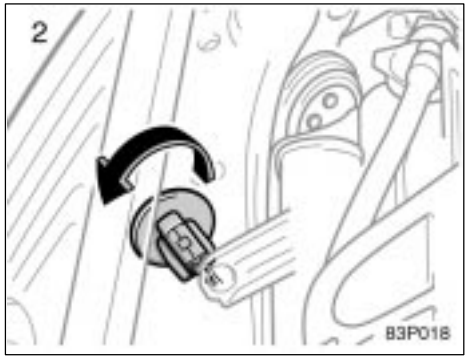

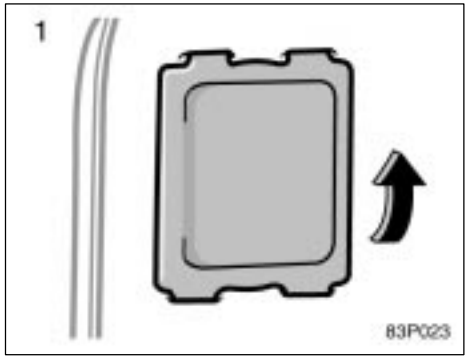

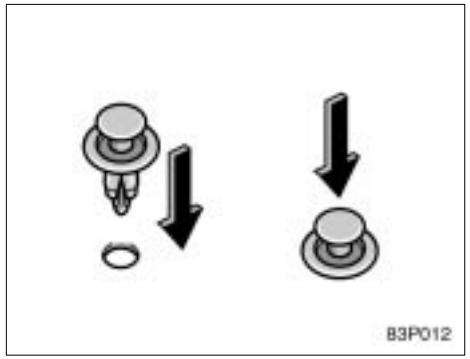

Installing clip

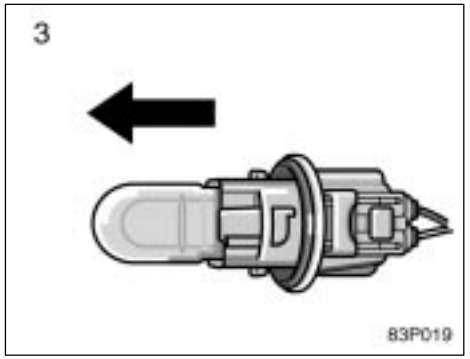

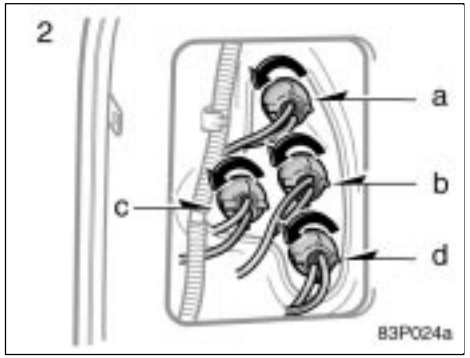

—High mounted stoplight

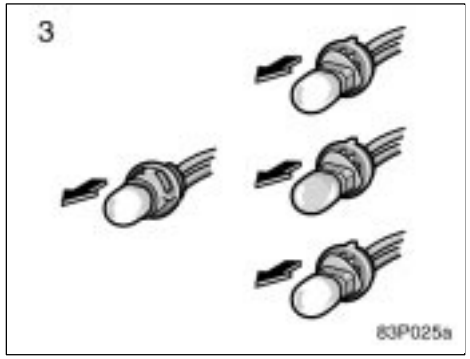

a: Tail light
b: Rear turn signal light
c: Back–up light
d: Stop/tail light

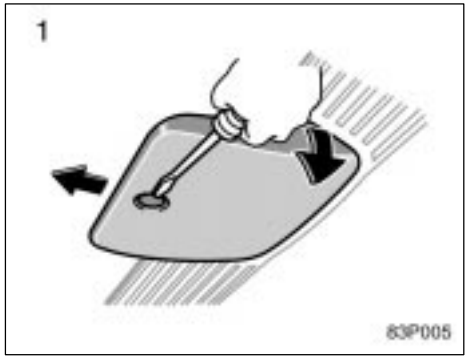

Use a flat–bladed screwdriver.

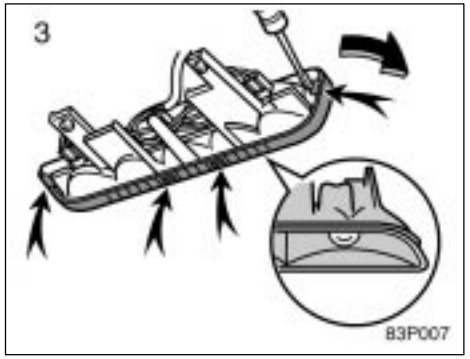

Use a flat–bladed screwdriver.

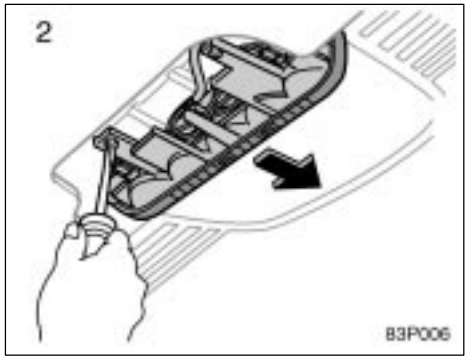

Use a Phillips–head screwdriver.

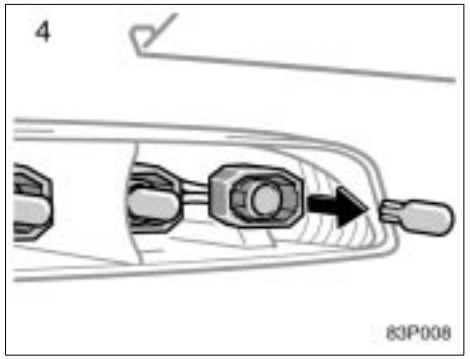

—License plate lights

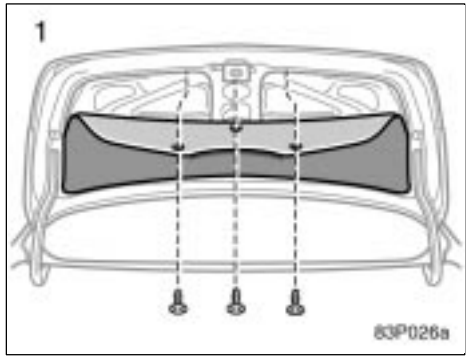

Remove the cover clips.

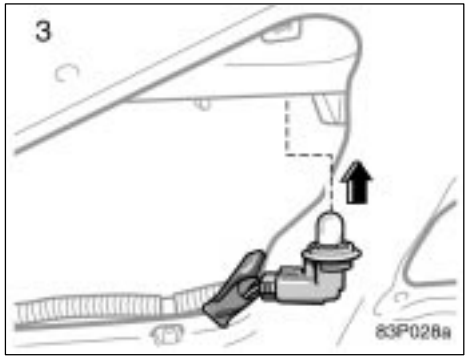

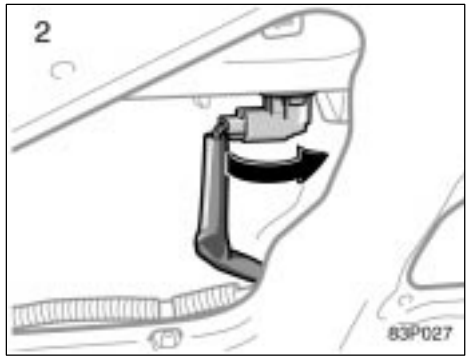

SECTION 9

SPECIFICATIONS

Dimensions and weight 234
Electric motor 234
Enginee 234
Fuel 235
Hybrid vehicle assembly 235
Service specifications 235
Tires 237
Fuses 237

Dimensions and weight

Overall length	mm (in.)	4305	(169.5)
Overall width	mm (in.)	1695	(66.7)
Overall height	mm (in.)	1465	(57.6)*
Wheelbase	mm (in.)	2550	(100.4)
Front tread	mm (in.)	1475	(58.1)
Rear tread	mm (in.)	1480	(58.2)
Vehicle capacity weight (occupants + luggage)	kg (lb.)	363	(800)

*: Unladen vehicle

Electric motor

Type: Permanent magnet motor (water cooling)

Rated output: 20 kW

Maximum output:
33.0/1040 – 5600 kW/rpm

Maximum torque:
350.0/0 – 400 N·m/rpm

Engine

Model: 1NZ–FXE

Type: 4–cylinder in line, 4 cycle, gasoline

Bore and stroke, mm (in.):
75.0 x 84.7 (2.95 x 3.33)

Displacement, cm^3 (cu. in.):
1497 (91.4)

Fuel

Fuel type:
Unleaded gasoline, Octane Rating 87 (Research Octane Number 91) or higher

Fuel tank capacity, L (gal., Imp. gal.):
45 (11.9, 9.9)

Hybrid vehicle battery

Type: Nickel–Metal hydride battery

Voltage: 7.2 V

Capacity: 6.5 Ah (3HR)

Quantity: 38

Overall voltage: 273.6 V

Service specifications

ENGINE

Valve clearance (engine cold), mm (in.):

Intake	0.17—0.23 (0.007—0.009)
Exhaust	0.27—0.33 (0.011—0.013)

Spark plug type:

DENSO	SK16R11
NGK	IFR5A11

Spark plug gap, mm (in.):
1.1 (0.043)

ENGINE LUBRICATION

Oil capacity (drain and refill), L (qt, Imp. qt.):

With filter	3.7 (3.9, 3.3)
Without filter	3.4 (3.6, 3.0)

Oil grade:

API grade SJ “Energy–Conserving”, SL “Energy–Conserving” or ILSAC multigrade engine oil is recommended.

Recommended oil viscosity (SAE):

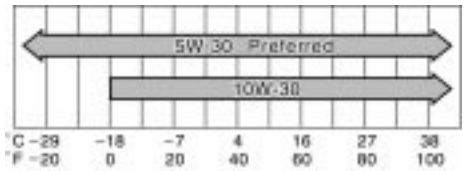

Temperature range anticipated before next oil change

OIL05U

COOLING SYSTEM

Total capacity, L (qt., Imp. qt.):

For gasoline engine	4.9	(5.2, 4.3)
For electric motor and inverter and converter	2.6	(2.7, 2.3)

Coolant type:

“TOYOTA Long Life Coolant” or equivalent

With ethylene–glycol type coolant for a proper corrosion protection of aluminum components

Do not use alcohol type antifreeze or plain water alone.

AUXILIARY BATTERY

Open voltage at 20°C (68°F):

12.6 – 12.8 V	Fully charged
12.2 – 12.4 V	Half charged
11.5 – 11.9 V	Discharged

[Voltage that is checked 20 minutes after the key is removed with all the lights turned off]

Charging rates: 3.5 A max.

HYBRID TRANSAXLE

Fluid capacity, L (qt., Imp. qt.):

4.6 (4.9, 4.1)

Fluid type:

Automatic transmission fluid Type T–IV or equivalent

BRAKES

Minimum pedal clearance when depressed with the force of 196 N (20 kgf, 44 lbf) with the traction motor running, mm (in.):
80 (3.15)

Pedal free play, mm (in.):
1 – 6 (0.04 – 0.24)

Parking brake adjustment when depressed with the force of 294 N (30 kgf, 66 lbf):
5 – 8 clicks

Fluid type:
SAE J1703 or FMVSS No. 116 DOT 3

STEERING

Wheel free play:
Less than 30 mm (1.2 in.)

Tires

Tire size and pressure:

Tire size	kPa (kgf/cm^2 or bar, psi)
Standard	
Front P175/65R14 84S	240 (2.4, 35)
Rear P175/65R14 84S	230 (2.3, 33)
Spare	
T125/70D16 96M	420 (4.2, 60)

Wheel size:

Standard	14 x 5 1/2JJ
Spare	16 x 4T

Wheel nut torque, N·m (kgf·m, ft·lbf):
103 (10.5, 76)

NOTE: For a complete information on tires (e.g. replacing tires or replacing wheels), see "Checking tire pressure" through "Aluminum wheel precautions", page 214 through 219 in Section 8–2.

Fuses

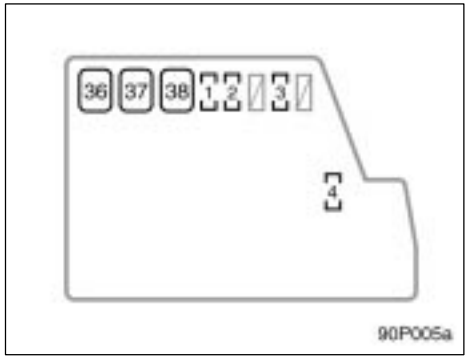

Engine compartment

1. **ABS NO.4 10 A:** Anti–lock brake system
2. **HTR NO.1 30 A:** Air conditioning system
3. **HTR NO.2 30 A:** Air conditioning system
4. **DRL 7.5 A:** Daytime running light system
5. **CDS FAN 30 A:** Air conditioning system
6. **HORN 10 A:** Horn
7. **HEAD HI (RH) (Vehicles with Daytime running light system only) 10 A:** Right–hand headlight (high beam)

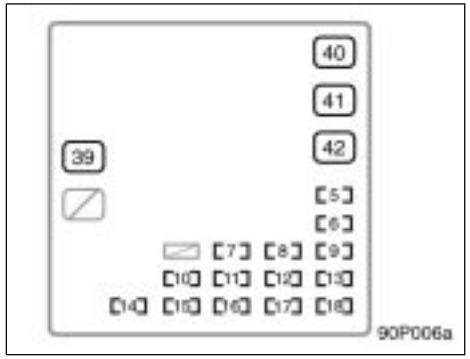

Engine compartment

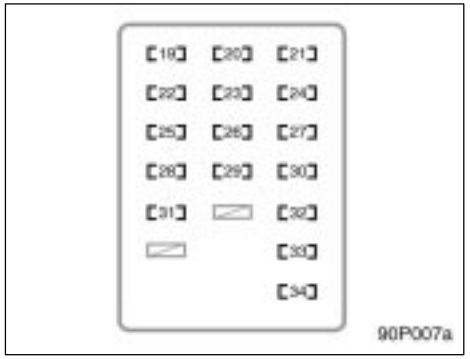

Instrument panel

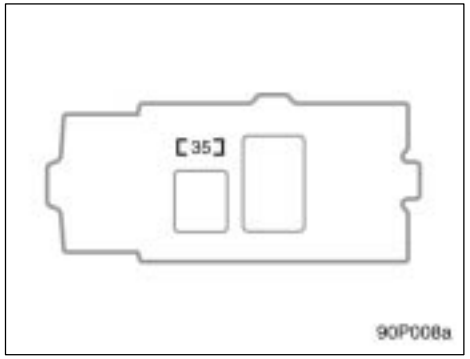

Trunk

8. **AM2 15 A:** Starting system, multiport fuel injection system/sequential multiport fuel injection system, hybrid vehicle immobiliser system
9. **THRO 15 A:** Electronic throttle control system
10. **HEAD (RH) (Vehicles without DAYTIME RUNNING LIGHT SYSTEM) or HEAD LO (RH) (Vehicles with DAYTIME RUNNING LIGHT SYSTEM) 10 A:** Right–hand headlight
11. **HEAD HI (LH) (Vehicles without DAYTIME RUNNING LIGHT SYSTEM) 10 A:** Left–hand headlight (high beam)
12. **BATT FAN 10 A:** Battery cooling fan
13. **ABS NO.3 20 A:** Hydraulic brake booster
14. **HV 20 A:** Hybrid system
15. **EFI 15 A:** Multiport fuel injection system/sequential multiport fuel injection system
16. **HEAD (LH) (Vehicles without DAYTIME RUNNING LIGHT SYSTEM) or HEAD LO (LH) (Vehicles with DAYTIME RUNNING LIGHT SYSTEM) 10 A:** Left–hand headlight
17. **DOME 15 A:** Audio system, mult–information display, interior light, trunk light, power window system, wireless remote control system
18. **TURN–HAZ 10 A:** Turn signal lights, Emergency flasher
19. **PANEL 5 A:** Audio system, ashtray light, headlight beam level control system, emergency flasher
20. **GAUGE 10 A:** Gauge and meter, emergency flasher, rear window defogger, service reminder indicator and warning buzzers, back–up light, power window system, air conditioning system

21. **HTR 10 A:** Air conditioning system
22. **TAIL 7.5 A:** Parking lights, tail lights, license plate lights, side marker lights
23. **ECU–IG 5 A:** Air conditioning system, anti–lock brake system, electric power steering, daytime running light system
24. **STOP 15 A:** Stop lights, high mounted stoplights, anti–lock brake system
25. **ACC 10 A:** Anti–lock brake system warning light, clock, audio system, multi–information display, shift lock system
26. **WIPER 30 A:** Windshield wiper
27. **ECU–B 7.5 A:** Air conditioning system, daytime running light system, electric power steering system, hybrid vehicle immobiliser system
28. **CIG 15 A:** Power outlet
29. **WASHER 15 A:** Washer
30. **DOOR 30 A:** Power door lock system
31. **SRS ACC 10 A:** SRS airbags, seat belt pretensioners
32. **OBD II 7.5 A:** No circuit
33. **PWR1 20 A:** Power window system
34. **AM1 5 A:** “ACC”, “CIG”, “SRS ACC”, “WASHER”, “HTR”, “WIPER”, “ECU–IG” and “GAUGE” fuses
35. **DC/DC–S 5 A:** Inverter and converter
36. **HTR NO.3 50 A:** Air conditioning system
37. **EMPS 50 A:** Electric power steering
38. **ABS NO.1 40 A:** Anti–lock brake system
39. **MF HEAD 30 A:** Daytime running light system
40. **HTR 50 A:** Air conditioning system
41. **RDI 30 A:** Electric cooling fan
42. **ABS NO.2 30 A:** Hydraulic brake booster

SECTION 10

REPORTING SAFETY DEFECTS FOR U.S. OWNERS AND UNIFORM TIRE QUALITY GRADING

Reporting safety defects for U.S. owners 242
Uniform tire quality gradingg 242

Reporting safety defects for U.S. owners

If you believe that your vehicle has a defect which could cause a crash or could cause injury or death, you should immediately inform the National Highway Traffic Safety Administration (NHTSA) in addition to notifying Toyota Motor Sales, U.S.A., Inc. (Toll–free: 1–800–331–4331).

If NHTSA receives similar complaints, it may open an investigation, and if it finds that a safety defect exists in a group of vehicles, it may order a recall and remedy campaign. However, NHTSA cannot become involved in individual problems between you, your dealer, or Toyota Motor Sales, U.S.A., Inc.

To contact NHTSA, you may either call the Auto Safety Hotline toll–free at 1–800–424–9393 (or 366–0123 in Washington, D.C. area) or write to: NHTSA, U.S. Department of Transportation, Washington, D.C. 20590. You can also obtain other information about motor vehicle safety from the Hotline.

Uniform tire quality grading

This information has been prepared in accordance with regulations issued by the National Highway Traffic Safety Administration of the U.S. Department of Transportation. It provides the purchasers and/or prospective purchasers of Toyota vehicles with information on uniform tire quality grading.

Your Toyota dealer will help answer any questions you may have as you read this information.

DOT quality grades—All passenger car tires must conform to Federal Safety Requirements in addition to these grades. Quality grades can be found where applicable on the tire sidewall between tread shoulder and maximum section width. For example: Treadwear 200 Traction AA Temperature A.

Tread wear—The tread wear grade is a comparative rating based on the wear rate of the tire when tested under controlled conditions on a specified government test course. For example, a tire graded 150 would wear one and a half (1–1/2) times as well on the government course as a tire graded 100. The relative performance of tires depends upon the actual conditions of their use, however, and may depart significantly from the norm due to variations in driving habits, service practices and differences in road characteristics and climate.

Traction AA, A, B, C—The traction grades, from highest to lowest, are AA, A, B, and C, and they represent the tire's ability to stop on wet pavement as measured under controlled conditions on specified government test surfaces of asphalt and concrete. A tire marked C may have poor traction performance.

Warning: The traction grade assigned to this tire is based on braking (straight ahead) traction tests and does not include cornering (turning) traction.

Temperature A, B, C—The temperature grades are A (the highest), B, and C, representing the tire's resistance to the generation of heat and its ability to dissipate heat when tested under controlled conditions on a specified indoor laboratory test wheel. Sustained high temperature can cause the material of the tire to degenerate and reduce tire life, and excessive temperature can lead to sudden tire failure. The grade C corresponds to a level of performance which all passenger car tires must meet under the Federal Motor Vehicle Safety Standard No. 109. Grades B and A represent higher levels of performance on the laboratory test wheel than the minimum required by law.

Warning: The temperature grades for this tire are established for a tire that is properly inflated and not overloaded. Excessive speed, underinflation, or excessive loading, either separately or in combination, can cause heat buildup and possible tire failure.