ASCEND CANNABIS DISPENSARY

115 COGGESHALL STREET · NEW BEDFORD · MASSACHUSETTS

SPECIAL PERMIT SUBMISSION

JANUARY 8, 2021

PREPARED FOR

ASCEND MASS, LLC
500 TOTTEN POND ROAD
CAMBRIDGE, MA 02140

PREPARED BY

FUSS & O'NEILL
108 MYRTLE STREET, SUITE 502
QUINCY, MA 02171
617.282.4675
www.fando.com

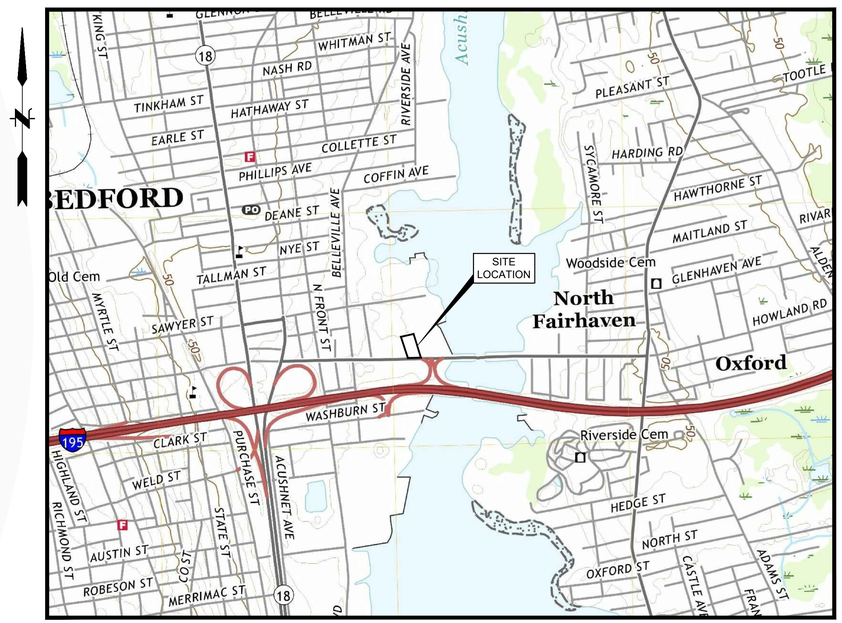

LOCATION MAP
SCALE: 1" = 1000'

SHEET INDEX

SHEET No.	SHEET TITLE
GI-001	COVER SHEET
CN-101	GENERAL NOTES
	BOUNDARY & TOPOGRAPHIC SURVEY
CP-101	SITE PREPARATION PLAN
CE-101	EROSION AND SEDIMENT CONTROL PLAN
CS-101	SITE LAYOUT PLAN
CG-101	GRADING, DRAINAGE, AND UTILITY PLAN
LP-101	LANDSCAPE PLAN
SL-101	SITE LIGHTING PLAN
CD-501	EROSION AND SEDIMENT CONTROL DETAILS
CD-502-503	SITE DETAILS
CD-504-505	STORMWATER MANAGEMENT DETAILS
CD-506	UTILITY DETAILS
CD-507	LANDSCAPE DETAILS

COMMONWEALTH OF MASSACHUSETTS
KEVIN J. ROBERTS
No. 34185
REGISTERED PROFESSIONAL ENGINEER
1/11/2021

PROJECT TEAM

BKA ARCHITECTS
142 CRESCENT STREET
BROCKTON, MA 02302
508.583.5603

PROJ. No.: 20191061.T10
DATE: 1/8/2021

GI-001

File Path: J:\DWG\P2019\1061\T10\Civil\Plan\20191061T10_COV01.dwg, Layout: GI-001, Plotted: Sunday, January 10, 2021, User: jdeninger Plotter: AUTOCAD PDF (GENERAL DOCUMENTATION).PC3 CTB File: FO.STB

MAP REFERENCE

1. EXISTING CONDITIONS DEPICTED ON THIS PLAN ARE BASED ON AN ACTUAL FIELD FIELD SURVEY PERFORMED BY CONTROL POINT ASSOCIATES, LLC. AND FROM PLANS OF RECORD.
2. TOPOGRAPHIC ELEVATIONS ARE BASED ON NAVD88 DATUM, BASED ON GPS OBSERVATIONS UTILIZING THE KEYSTONE VRS NETWORK.
3. 100 YEAR FLOOD BOUNDARY BASED ON FEDERAL EMERGENCY MANAGEMENT AGENCY (FEMA) FLOOD INSURANCE RATE MAP PANEL NUMBER 25005C0391G, EFFECTIVE DATE JULY 16, 2014 AND PANEL NUMBER 25005C0393G, EFFECTIVE DATE JULY 16, 2014.

GENERAL NOTES

1. SYMBOLS AND LEGENDS OF PROJECT FEATURES ARE GRAPHIC REPRESENTATIONS AND ARE NOT NECESSARILY SHOWN ON THE DRAWINGS TO SCALE OR TO THEIR ACTUAL DIMENSION OR LOCATION. COORDINATE DETAIL SHEET DIMENSIONS, MANUFACTURERS' LITERATURE, SHOP DRAWINGS AND FIELD MEASUREMENTS OF SUPPLIED PRODUCTS FOR LAYOUT OF THE PROJECT FEATURES.
2. DO NOT RELY SOLELY ON ELECTRONIC VERSIONS OF DRAWINGS, SPECIFICATIONS, AND DATA FILES THAT ARE PROVIDED BY THE ENGINEER. FIELD VERIFY LOCATION OF PROJECT FEATURES.
3. PERFORM NECESSARY CONSTRUCTION NOTIFICATIONS, APPLY FOR AND OBTAIN NECESSARY PERMITS, PAY FEES, AND POST BONDS ASSOCIATED WITH THE WORK AS REQUIRED BY THE CONTRACT DOCUMENTS.
4. SEE ARCHITECTURAL DRAWINGS FOR DIMENSIONS OF BUILDINGS AND ADJACENT SITE ELEMENTS INCLUDING SIDEWALKS, RAMPS, BUILDING ENTRANCES, STAIRWAYS, UTILITY PENETRATIONS, CONCRETE DOOR PADS, COMPACTOR PAD, LOADING DOCKS, BOLLARDS, ETC.
5. LOCATION OF UTILITIES SHOWN HEREON ARE THE RESULT OF SURFACE EVIDENCE AS LOCATED BY FIELD SURVEY, PLANS OF RECORD, INFORMATION FURNISHED BY THE RESPECTIVE UTILITY COMPANIES, AND OTHER AVAILABLE SOURCES. THIS PLAN DOES NOT NECESSARILY DEPICT THE EXACT LOCATION OF ALL UTILITIES WHICH MAY EXIST AT THIS TIME WITHIN THE PREMISES SURVEYED. LOCATIONS SHOULD BE VERIFIED BY THE RESPECTIVE UTILITY COMPANY BEFORE BEING RELIED UPON. ALL FIELD CHANGES MUST BE APPROVED BY THE ENGINEER.
6. LOCATION AND INVERTS OF EXISTING UTILITIES SHALL BE VERIFIED WITH THE ENGINEER PRIOR TO CONSTRUCTION. ALL FIELD CHANGES MUST BE APPROVED BY THE ENGINEER.
7. FUSS & O'NEILL MAKES NO GUARANTEES THAT THE UNDERGROUND UTILITIES SHOWN COMPRISE ALL SUCH UTILITIES IN THE AREA. FUSS & O'NEILL FURTHER DOES NOT WARRANT THAT THE UNDERGROUND UTILITIES SHOWN ARE IN THE EXACT LOCATION INDICATED. FUSS & O'NEILL HAS NOT PHYSICALLY LOCATED THE UNDERGROUND UTILITIES. BEFORE CONSTRUCTION, CALL DIG SAFE FOR CLEARANCE.
8. REFER TO CONTRACT DOCUMENTS FOR GEOTECHNICAL REQUIREMENTS.

REGULATORY REQUIREMENTS

1. APPROVED PLANS SHALL BE ON SITE AT ALL TIMES.
2. WITHIN LOCAL RIGHTS-OF-WAY, PERFORM THE WORK IN ACCORDANCE WITH LOCAL MUNICIPAL STANDARDS.
3. BE RESPONSIBLE FOR SITE SECURITY AND JOB SAFETY. PERFORM CONSTRUCTION ACTIVITIES IN ACCORDANCE WITH OSHA STANDARDS AND LOCAL REQUIREMENTS.
4. DISPOSE OF DEMOLITION DEBRIS IN ACCORDANCE WITH APPLICABLE FEDERAL, STATE AND LOCAL REGULATIONS, ORDINANCES AND STATUTES.
5. CALL DIG-SAFE 811 OR 1-888-DIG-SAFE A MINIMUM OF 72 HOURS PRIOR TO CONSTRUCTION.

EARTHWORK

1. CALL DIG-SAFE 811 OR 1-888-DIG-SAFE A MINIMUM OF 72 HOURS PRIOR TO CONSTRUCTION.
2. STOP WORK IN THE VICINITY OF SUSPECTED CONTAMINATED SOIL, GROUNDWATER OR OTHER MEDIA. IMMEDIATELY NOTIFY THE OWNER SO THAT APPROPRIATE TESTING AND SUBSEQUENT ACTION CAN BE TAKEN. RESUME WORK IN THE IMMEDIATE VICINITY ONLY UPON DIRECTION BY THE OWNER.
3. PROTECT ALL SLOPES, VEGETATION, PAVING, WALKS, AND IMPROVEMENTS OUTSIDE THE AREAS TO BE AFFECTED BY THE CONSTRUCTION OF THIS PROJECT.
4. CATCH BASINS WITHIN THE WORK AREA OR DOWN STREAM OF DRAINAGE FLOW SHALL BE PROTECTED WITH CATCH BASIN SILT SACKS.
5. WATER AND CALCIUM CHLORIDE MUST BE AVAILABLE AT ALL TIMES FOR DUST CONTROL.

DEMOLITION

1. THE DEMOLITION PLAN IS PROVIDED FOR INFORMATION ONLY AND MAY NOT INDICATE ALL ITEMS REQUIRED TO BE DEMOLISHED. PERFORM A PRE-BID SITE INSPECTION. COORDINATE DEMOLITION OF UNIDENTIFIED UTILITIES OR STRUCTURES WITH OWNER. DEMOLISH STRUCTURES, SITE IMPROVEMENTS, UTILITIES, ETC. AS REQUIRED TO CONSTRUCT PROPOSED FACILITY AND UTILITY SERVICES.
2. TREES, BRUSH AND STUMPS REMOVED BY CLEARING & GRUBBING OPERATIONS SHALL BE TRANSPORTED OFF THE PROJECT SITE TO AN APPROVED DISPOSAL LOCATION.
3. ITEMS TO BE STOCKPILED ON-SITE FOR REUSE OR TO BE RELOCATED SHALL BE PROTECTED FROM CONSTRUCTION OPERATIONS. IF DAMAGED DURING CONSTRUCTION THEY SHALL BE REPLACED IN-KIND AT NO ADDITIONAL COST TO THE OWNER.

WORK RESTRICTIONS

1. DO NOT CLOSE OR OBSTRUCT ROADWAYS, SIDEWALKS, FIRE HYDRANTS, AND UTILITIES WITHOUT APPROPRIATE PERMITS.
2. WORK IS RESTRICTED TO THE HOURS OF 7 AM TO 5 PM, MONDAY THROUGH SATURDAY UNLESS OTHERWISE APPROVED BY THE OWNER AND THE CITY OF NEW BEDFORD.

CONSTRUCTION LAYOUT

1. PROVIDE PROPER TRANSITIONS BETWEEN EXISTING AND PROPOSED SITE IMPROVEMENTS. FIELD VERIFY EXISTING PAVEMENT AND GROUND ELEVATIONS AT THE INTERFACE WITH PROPOSED PAVEMENTS AND DRAINAGE STRUCTURES BEFORE START OF CONSTRUCTION.
2. PRIOR TO ORDERING MATERIALS AND BEGINNING CONSTRUCTION, FIELD VERIFY PROPOSED UTILITY ROUTES AND IDENTIFY ANY INTERFERENCES OR OBSTRUCTIONS WITH EXISTING UTILITIES OR PUBLIC RIGHTS-OF-WAY.
3. IMMEDIATELY INFORM THE ENGINEER IN WRITING IF EXISTING UTILITY CONDITIONS CONFLICT OR DIFFER FROM THAT INDICATED AND IF THE WORK CANNOT BE COMPLETED AS INDICATED.
4. DIMENSIONS ARE FROM FACE OF CURB, FACE OF BUILDING, FACE OF WALL, AND CENTER LINE OF PAVEMENT MARKINGS, UNLESS NOTED OTHERWISE.
5. BOUNDS OR MONUMENTATION DISTURBED DURING CONSTRUCTION SHALL BE SET OR RESET BY A PROFESSIONAL LICENSED SURVEYOR.
6. BE RESPONSIBLE FOR THE MAINTENANCE AND SAFETY OF TRAFFIC ON THE PUBLIC AND PRIVATE WAYS AFFECTED BY THE CONSTRUCTION OF THIS PROJECT.

PAVEMENT

1. CONSTRUCT ACCESSIBLE ROUTES, PARKING SPACES, RAMPS, SIDEWALKS AND WALKWAYS IN CONFORMANCE WITH THE FEDERAL AMERICANS WITH DISABILITIES ACT AND WITH MASSACHUSETTS ARCHITECTURAL ACCESS BOARD AND LOCAL LAWS AND REGULATIONS (WHICHEVER ARE MORE STRINGENT.)

SITE RESTORATION

1. PROVIDE 6 INCHES OF TOPSOIL AND SEED TO AREAS DISTURBED DURING CONSTRUCTION AND NOT DESIGNATED TO BE RESTORED WITH IMPERVIOUS SURFACES (BUILDINGS, PAVEMENTS, WALKS, ETC.) UNLESS OTHERWISE NOTED. REQUIRED SEED MIX:

- 50% KENTUCKY BLUEGRASS
- 40% TALL FESCUE
- 10% PERENNIAL RYEGRASS

2. REPAIR DAMAGES RESULTING FROM CONSTRUCTION LOADS, AT NO ADDITIONAL COST TO OWNER.
3. RESTORE AREAS DISTURBED BY CONSTRUCTION OPERATIONS OUTSIDE OF THE WORK AREA TO THEIR ORIGINAL CONDITION OR BETTER, AT NO ADDITIONAL COST TO OWNER.

UTILITIES

1. TERMINATE EXISTING UTILITIES IN CONFORMANCE WITH LOCAL, STATE AND INDIVIDUAL UTILITY COMPANY STANDARD SPECIFICATIONS AND DETAILS. COORDINATE UTILITY SERVICE DISCONNECTS WITH UTILITY REPRESENTATIVES.
2. THE TYPE, SIZE AND LOCATION OF DEPICTED UNDERGROUND UTILITIES ARE APPROXIMATE REPRESENTATIONS OF INFORMATION OBTAINED FROM FIELD LOCATIONS OF VISIBLE FEATURES, EXISTING MAPS AND PLANS OF RECORD, UTILITY MAPPING, AND OTHER SOURCES OF INFORMATION OBTAINED BY THE ENGINEER. ASSUME NO GUARANTEE AS TO THE COMPLETENESS, SERVICEABILITY, EXISTENCE, OR ACCURACY OF UNDERGROUND FACILITIES. FIELD VERIFY THE EXACT LOCATIONS, SIZES, AND ELEVATIONS OF THE POINTS OF CONNECTIONS TO EXISTING UTILITIES.
3. PAY ALL FEES AND COSTS ASSOCIATED WITH UTILITY MODIFICATIONS AND CONNECTIONS, REGARDLESS OF THE ENTITY THAT PERFORMS THE WORK.
4. COORDINATE THE WORK AND WORK SCHEDULE WITH UTILITY COMPANIES. PROVIDE ADEQUATE NOTICE TO UTILITIES TO PREVENT DELAYS IN CONSTRUCTION.
5. INSTALL PROPOSED PRIVATE UTILITY SERVICES ACCORDING TO THE REQUIREMENTS PROVIDED BY, AND APPROVED BY THE AUTHORITY HAVING JURISDICTION (WATER, SEWER, GAS, TELEPHONE, ELECTRIC, FIRE ALARM, ETC.). COORDINATE FINAL DESIGN LOADS AND LOCATIONS WITH OWNER AND ARCHITECT.
6. COORDINATE WITH UTILITY COMPANY FOR THE REMOVAL OF OVERHEAD WIRE AND POLES.
7. NOTIFY ABUTTING PROPERTY OWNERS AND THE CITY OF NEW BEDFORD 24 HOURS PRIOR TO DISRUPTION OF UTILITY SERVICE.
8. ALL WATER SERVICE AND SEWER SERVICE CONNECTIONS SHALL BE COORDINATED WITH THE CITY OF NEW BEDFORD WATER AND WASTEWATER DIVISIONS.

EROSION & SEDIMENT CONTROL NOTES

1. DISTURBANCE OF SOIL SURFACES IS REGULATED BY STATE LAW AND LOCAL ORDINANCE. WORK SHALL COMPLY WITH THE FOLLOWING CRITERIA TO PREVENT OR MINIMIZE SOIL EROSION.
2. PRIOR TO THE COMMENCEMENT OF CONSTRUCTION ACTIVITIES, INSTALL EROSION AND SEDIMENT CONTROL DEVICES AS SHOWN ON THE PLAN. MAINTAIN EROSION CONTROL DEVICES IN EFFECTIVE CONDITION DURING CONSTRUCTION.
3. INSTALL, INSPECT, MAINTAIN, AND/OR REPLACE TEMPORARY AND PERMANENT EROSION CONTROL DEVICES TO ENSURE PROPER OPERATION IN A TIMELY MANNER THROUGHOUT THE LIFE OF THE PROJECT. MAINTAIN PERMANENT MEASURES UNTIL CONSTRUCTION OF THE PROJECT IS COMPLETED OR UNTIL IT IS ACCEPTED BY THE OWNER. DISPOSE OF SEDIMENT IN AN UPLAND AREA.
4. INSPECT EROSION AND SEDIMENT CONTROLS DAILY AND REMOVE ACCUMULATED SEDIMENTS AS NEEDED. REPAIR OR CORRECT ANY ISSUES, AND NOTIFY THE CONSERVATION COMMISSION IMMEDIATELY.
5. MAINTAIN A STOCKPILE OF ADDITIONAL EROSION AND SEDIMENT CONTROL DEVICES ON SITE AT ALL TIMES. AT A MINIMUM, MAINTAIN A STOCKPILE OF AT LEAST 100 FEET OR 10% OF THE TOTAL AMOUNT OF DEVICES CURRENTLY DEPLOYED AT THE SITE, WHICHEVER IS GREATER.
6. CLEAN ROADS, CONTROL DUST, AND TAKE NECESSARY MEASURES TO ENSURE THAT THE SITE AND ALL ROADS BE MAINTAINED IN A MUD- AND DUST-FREE CONDITION AT ALL TIMES THROUGHOUT THE LIFE OF THE CONTRACT. DUST CONTROL SHALL INCLUDE, BUT IS NOT LIMITED TO, WATER AND/OR CRUSHED STONE OR COARSE GRAVEL, SUBJECT TO THE APPROVAL OF THE ENGINEER.
7. VEHICLE TRAFFIC ENTERING OR EXITING THE PROJECT SITE SHALL PASS OVER THE CONSTRUCTION ENTRANCE(S). MAINTAIN THE CONSTRUCTION ENTRANCE(S) IN A CONDITION THAT WILL PREVENT TRACKING OR FLOWING OF SEDIMENT ONTO THE SURROUNDING ROADWAYS. THIS WILL REQUIRE PERIODIC TOP DRESSING WITH ADDITIONAL STONE OR ADDITIONAL LENGTH AS CONDITIONS DEMAND AND REPAIR AND/OR CLEANOUT OF ANY MEASURES USED TO TRAP SEDIMENT. ALL SEDIMENT SPILLED, DROPPED, WASHED, OR TRACKED ONTO THE SURROUNDING ROADWAYS MUST BE REMOVED IMMEDIATELY.
8. INSTALL PERIMETER SEDIMENT CONTROL BARRIERS AS SHOWN ON THE SITE PLANS OR AS MAY BE REQUIRED TO PREVENT SEDIMENT FLOW TO STORM DRAINS OR SURFACE WATERS. A ROW OF STAKED HAYBALES OR A SILT FENCE SHALL ALSO BE INSTALLED AROUND ANY SOIL STOCKPILE AREAS. CLEANOUT OF ACCUMATED SEDIMENT BEHIND PERIMETER SEDIMENT CONTROL BARRIER IS NECESSARY IF ONE-HALF THE ORIGINAL HEIGHT OF THE BARRIER BECOMES FILLED WITH SEDIMENT. REPLACE BARRIER IMMEDIATELY IF BARRIER DECOMPOSED OR BECOMES INEFFECTIVE.
9. PERFORM CONSTRUCTION SEQUENCING IN SUCH A MANNER TO CONTROL EROSION AND TO MINIMIZE THE TIME THAT EARTH MATERIALS ARE EXPOSED BEFORE THEY ARE COVERED, SEEDED, OR OTHERWISE STABILIZED.
10. IF FINAL GRADING IS TO BE DELAYED FOR MORE THAN THIRTY (30) DAYS AFTER LAND DISTURBANCES CEASE, TEMPORARY VEGETATION OR MULCH SHALL BE USED TO STABILIZE SOILS. OUTSIDE OF THE GROWING SEASON, ONLY WOOD MULCH SHALL BE USED.
11. PERMANENT VEGETATIVE COVER SHALL BE APPLIED TO ALL DISTURBED AREAS THAT HAVE REACHED FINISHED GRADE AS SOON AS POSSIBLE, BUT NOT MORE THAN FOURTEEN (14) DAYS AFTER THE CONSTRUCTION ACTIVITY IN THAT AREA HAS PERMANENTLY CEASED. THE RECOMMENDED PERMANENT SEEDING DATES ARE APRIL 1 TO JUNE 15 AND AUGUST 15 TO SEPTEMBER 30.

    LIMESTONE AND FERTILIZER SHALL BE APPLIED ACCORDING TO SOIL TEST RECOMMENDATIONS OFFERED BY THE UNIVERSITY OF MASSACHUSETTS SOIL TESTING LABORATORY. IF SOIL TESTING IS NOT FEASIBLE ON SMALL OR VARIABLE SITES, OR WHERE TIMING IS CRITICAL, FERTILIZER MAY BE APPLIED AT THE RATE OF 500 POUNDS PER ACRE OR 11.5 POUNDS PER 1,000 SQUARE FEET OF 10-20-20 OR EQUIVALENT. APPLY LIMESTONE (EQUIVALENT TO 50 PERCENT CALCIUM PLUS MAGNESIUM OXIDE) AS FOLLOWS: 4 TONS PER ACRE (OR 180 POUNDS PER 1,000 SQUARE FEET) FOR CLAY, CLAY LOAM AND HIGH ORGANIC SOIL; 3 TONS PER ACRE (OR 135 POUNDS PER 1,000 SQUARE FEET) FOR SANDY LOAM, LOAM, OR SILT LOAM; AND 2 TONS PER ACRE (OR 90 POUNDS PER 1,000 SQUARE FEET) LOAMY SAND OR SAND.

12. EXISTING OR PROPOSED STORMWATER DRAINAGE STRUCTURES THAT MAY BE SUBJECT TO SEDIMENTATION SHALL BE PROTECTED WITH STAKED HAYBALES, SILT FENCE, SILT SACKS, OR OTHER APPROVED MEASURES THROUGHOUT THE ENTIRE CONSTRUCTION PERIOD.
13. WASTE DISPOSAL: MATERIALS WHICH COULD BE A POTENTIAL SOURCE OF STORMWATER POLLUTION SUCH AS GASOLINE, DIESEL FUEL, HYDRAULIC OIL, ETC., SHALL BE STORED AT THE END OF EACH DAY IN A STORAGE TRAILER OR COVERED LOCATION AND TAKEN OFF-SITE AND PROPERLY DISPOSED OF. ALL TYPES OF WASTE GENERATED AT THIS SITE SHALL BE DISPOSED OF IN A MANNER CONSISTENT WITH STATE LAW AND/OR REGULATIONS.
14. CONTROL OF ALLOWABLE NON-STORMWATER DISCHARGES: IF ALLOWABLE NON-STORM WATER DISCHARGES ARE OCCURRING AT THE SITE, SUCH DISCHARGES SHALL BE VISUALLY OBSERVED AND RECORDED. THE LIST OF EXPECTED SOURCES OF ALLOWABLE NON-STORM WATER DISCHARGES FOR THIS PROJECT ARE AS FOLLOWS: (1) DISCHARGE FROM VEHICLE WASHDOWN WHERE NO DETERGENTS ARE USED, (2) EXTERNAL BUILDING WASHDOWN WHERE NO DETERGENTS ARE USED, (3) THE USE OF WATER TO CONTROL DUST, (5) LAWN WATERING, (6) POTABLE WATER SOURCES INCLUDING WATERLINE FLUSHINGS, (7) IRRIGATION DRAINAGE, (8) PAVEMENT WASHWATERS WHERE SPILLS OR LEAKS OF TOXIC OR HAZARDOUS MATERIALS HAVE NOT OCCURRED (UNLESS ALL SPILLED MATERIALS HAVE BEEN REMOVED) AND WHERE NO DETERGENTS ARE USED, AND (9) FOUNDATION OR FOOTING DRAINS WHERE FLOWS ARE NOT CONTAMINATED WITH PROCESS SUCH AS SOLVENTS OR CONTAMINATED BY CONTACT WITH SOILS WHERE SPILLS OR LEAKS OF TOXIC OR HAZARDOUS MATERIALS HAS OCCURRED.
15. GOOD HOUSEKEEPING: THE PROJECT SITE SHALL PROVIDE FOR THE MINIMIZATION OF EXPOSURE OF CONSTRUCTION DEBRIS (INCLUDING, BUT NOT LIMITED TO, INSULATION, WIRING, PAINTS AND PAINT CANS, SOLVENTS, WALL BOARD, ETC.) TO PRECIPITATION BY MEANS OF DISPOSAL AND/OR PROPER SHELTER OR COVER. CONSTRUCTION WASTE MUST BE PROPERLY DISPOSED OF IN ORDER TO AVOID EXPOSURE TO PRECIPITATION AT THE END OF EACH WORKING DAY.
16. UPON COMPLETION OF CONSTRUCTION AND ESTABLISHMENT OF PERMANENT GROUND COVER, REMOVE AND DISPOSE OF TEMPORARY EROSION CONTROL MEASURES. CLEAN SEDIMENT AND DEBRIS FROM TEMPORARY MEASURES AND FROM PERMANENT STORM DRAIN AND SANITARY SEWER SYSTEMS.

Zoning Table

115 Coggeshall Street, New Bedford, Massachusetts
Zoning District: Industrial Zone B (IB)

	Required	Existing	Proposed
Minimum Lot Size	0 SF	9,499 SF	9,499 SF
Minimum Lot Frontage	0'	56'	56'
Maximum Height of Buildings (Stories)	100' (7)	26.7' (2)	26.7' (2)
Minimum Front Yard	25'	17'	17'
Minimum Side Yard	25'	0'	0'
Minimum Rear Yard	25'	61'	61'
Lot Coverage By Buildings	50%	44%	41%
Green Space	20%	0%	9.6%

Parking Requirements

	Building Area (SF)	Parking Required (Spaces)	Parking Provided (Spaces)
Retail of Goods & Services (1 space per 200 SF GFA)	5000	25	25

No.	DATE	DESCRIPTION	DESIGNER	REVIEWER

COMMONWEALTH OF MASSACHUSETTS
KEVIN McGARRY
CIVIL
No. 53182
REGISTERED
PROFESSIONAL ENGINEER
1/11/2021

SCALE:
HORZ.: N.T.S.
VERT.:
DATUM:
HORZ.:
VERT.:
0
GRAPHIC SCALE

FUSS & O'NEILL
108 MYRTLE STREET, SUITE 502
QUINCY, MA 02171
617.282.4675
www.fando.com

ASCEND MASS, LLC
GENERAL NOTES
115 COGGESHALL STREET
NEW BEDFORD MASSACHUSETTS

PROJ. No.: 20191061.T10
DATE: 1/8/2021

CN-101

File Path: J:\DWG\P2019\1061\T10\Civil\Plan\20191061T10_DET01.dwg Layout: CN-101 Plotted: Sun, January 10, 2021 - 2:50 PM User: jdeninger
MS VIEW: LAYER STATE: Plotter: AUTOCAD PDF (GENERAL DOCUMENTATION).PC3 CTB File: FO.STB

LEGEND

— — 124 — — / — — 125 — —	EXISTING CONTOUR
× 123.45	EXISTING SPOT ELEVATION
× TC 123.45	EXISTING TOP OF CURB ELEVATION
× G 122.95	EXISTING GUTTER ELEVATION
× TW 123.45	EXISTING TOP OF WALL ELEVATION
× BW 122.95	EXISTING BOTTOM OF WALL ELEVATION
× FF 123.45	EXISTING FINISHED FLOOR ELEVATION
	HYDRANT
WV	WATER VALVE
GV	GAS VALVE
GM	GAS METER
EM	ELECTRIC METER
—— OH ——	OVERHEAD WIRES
—— G ——	APPROX. LOC. UNDERGROUND GAS LINE
UPLP #	UTILITY POLE/LIGHT POLE
	AREA LIGHT
	SIGN
•	BOLLARD
P∘	POST
	PAINTED ARROWS
Ⓓ DMH	DRAINAGE/STORM MANHOLE
Ⓔ EMH	ELECTRIC MANHOLE
Ⓢ SMH	SANITARY/SEWER MANHOLE
T#	TREE & TRUNK SIZE
CLF	CHAIN LINK FENCE
DC	DEPRESSED CURB
EOC	EDGE OF CONCRETE
EOP	EDGE OF PAVEMENT
GL	GUTTER LINE
LSA	LANDSCAPED AREA
(TYP)	TYPICAL
SWL	SOLID WHITE LINE
DYL	DOUBLE YELLOW LINE
HT	HEIGHT
BLDG	BUILDING
TOW	TOP OF WATER
BOS	BOTTOM OF STRUCTURE
NVP	NO VISIBLE PIPE
VGC	VERTICAL GRANITE CURB
[58.8']	BUILDING DIMENSION

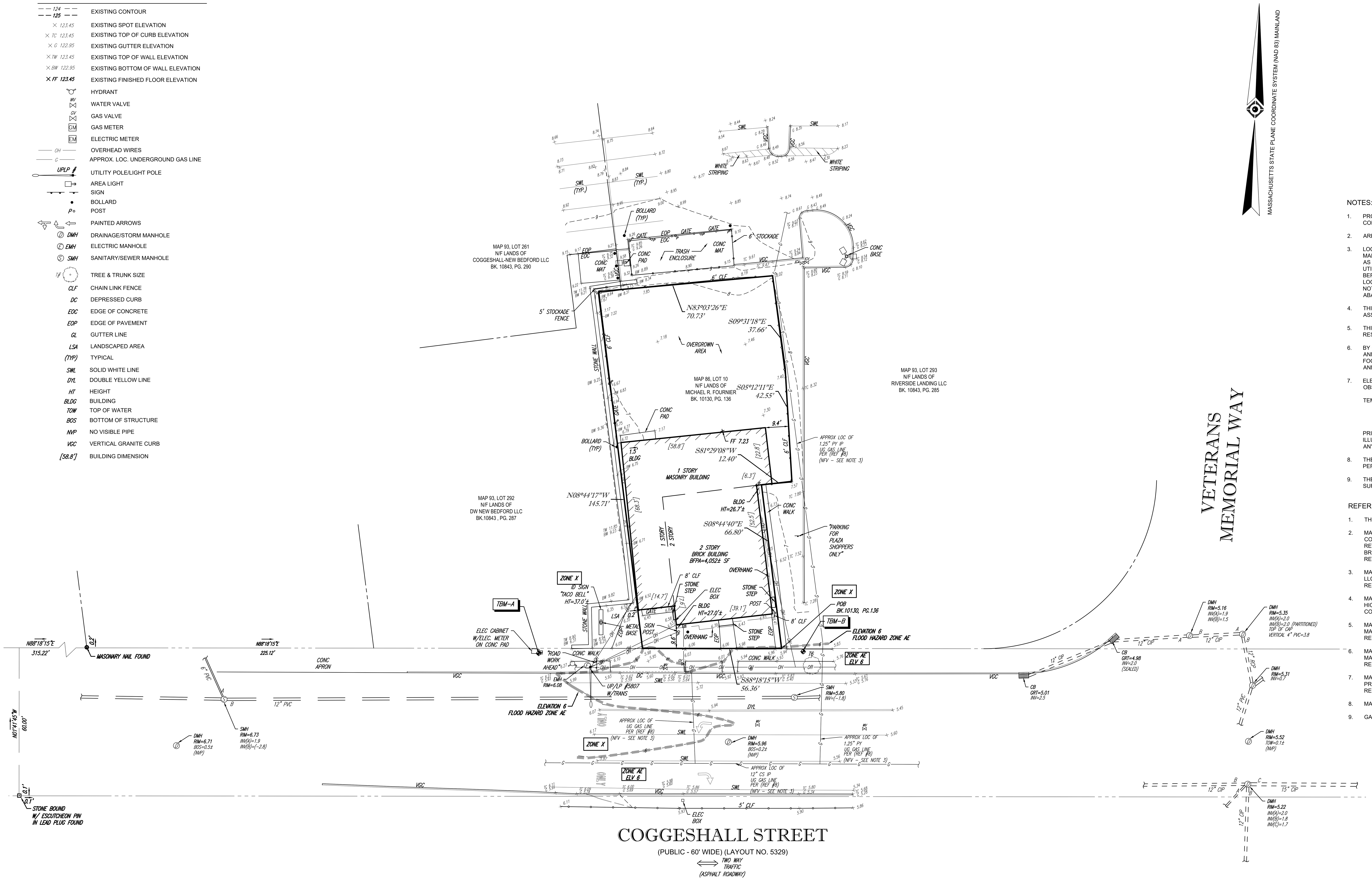

LOCUS MAP
©2013 ESRI WORLD STREET MAPS
NOT TO SCALE

NOTES:

1. PROPERTY KNOWN AS LOT 10 AS SHOWN ON THE CITY OF NEW BEDFORD, BRISTOL COUNTY, COMMONWEALTH OF MASSACHUSETTS; MAP NO. 86.
2. AREA = 9,499 SQUARE FEET OR 0.218 ACRES
3. LOCATION OF UNDERGROUND UTILITIES ARE APPROXIMATE. LOCATIONS AND SIZES ARE BASED ON UTILITY MARK-OUTS, ABOVE GROUND STRUCTURES THAT WERE VISIBLE & ACCESSIBLE IN THE FIELD, AND THE MAPS AS LISTED IN THE REFERENCES AVAILABLE AT THE TIME OF THE SURVEY. AVAILABLE AS-BUILT PLANS AND UTILITY MARKOUT DOES NOT ENSURE MAPPING OF ALL UNDERGROUND UTILITIES AND STRUCTURES. BEFORE ANY EXCAVATION IS TO BEGIN, ALL UNDERGROUND UTILITIES SHOULD BE VERIFIED AS TO THEIR LOCATION, SIZE AND TYPE BY THE PROPER UTILITY COMPANIES. CONTROL POINT ASSOCIATES, INC. DOES NOT GUARANTEE THE UTILITIES SHOWN COMPRISE ALL SUCH UTILITIES IN THE AREA EITHER IN SERVICE OR ABANDONED.
4. THIS PLAN IS BASED ON INFORMATION PROVIDED BY A SURVEY PREPARED IN THE FIELD BY CONTROL POINT ASSOCIATES, INC. AND OTHER REFERENCE MATERIAL AS LISTED HEREON.
5. THIS SURVEY WAS PREPARED WITHOUT THE BENEFIT OF A TITLE REPORT AND IS SUBJECT TO THE RESTRICTIONS, COVENANTS AND/OR EASEMENTS THAT MAY BE CONTAINED THEREIN.
6. BY GRAPHIC PLOTTING ONLY PROPERTY IS LOCATED IN FLOOD HAZARD ZONE X SHADED (AREAS OF 0.2% ANNUAL CHANCE FLOOD; AREAS OF 1% ANNUAL CHANCE FLOOD WITH AVERAGE DEPTHS OF LESS THAN 1 FOOT OR WITH DRAINAGE AREAS LESS THAN 1 SQUARE MILE; AND AREAS PROTECTED BY LEVESS FROM 1 % ANNUAL CHANCE FLOOD.) & FLOOD HAZARD ZONE AE - ELEVATION 6 PER REF. #2
7. ELEVATIONS REFER TO THE NORTH AMERICAN VERTICAL DATUM OF 1988 (NAVD88), BASED ON GPS OBSERVATIONS UTILIZING THE KEYSTONE VRS NETWORK (KEYNETGPS).

   TEMPORARY BENCH MARKS SET:
   TBM-A: TOP OF CRETE AT CORNER OF CONCRETE PAD. ELEVATION = 7.12'

   TBM-B: DRILL HOLE SET IN CONCRETE WALK. ELEVATION = 5.91'

   PRIOR TO CONSTRUCTION IT IS THE CONTRACTOR'S RESPONSIBILITY TO VERIFY THAT THE BENCHMARKS ILLUSTRATED ON THIS SKETCH HAVE NOT BEEN DISTURBED AND THEIR ELEVATIONS HAVE BEEN CONFIRMED. ANY CONFLICTS MUST BE REPORTED PRIOR TO CONSTRUCTION.
8. THE OFFSETS SHOWN ARE NOT TO BE USED FOR THE CONSTRUCTION OF ANY STRUCTURE, FENCE, PERMANENT ADDITION, ETC.
9. THE EXISTENCE OF UNDERGROUND STORAGE TANKS, IF ANY, WAS NOT KNOWN AT THE TIME OF THE FIELD SURVEY.

REFERENCES:

1. THE TAX ASSESSOR'S MAP OF NEW BEDFORD, BRISTOL COUNTY, SHEET #86.
2. MAP ENTITLED "NATIONAL FLOOD INSURANCE PROGRAM, FIRM, FLOOD INSURANCE RATE MAP, BRISTOL COUNTY, MASSACHUSETTS (ALL JURISDICTIONS) PANEL 393 OF 550," MAP NUMBER 25005C0393G MAP REVISED: JULY 16,2014 AND "NATIONAL FLOOD INSURANCE PROGRAM, FIRM, FLOOD INSURANCE RATE MAP, BRISTOL COUNTY, MASSACHUSETTS (ALL JURISDICTIONS) PANEL 391OF 550," MAP NUMBER 25005C0391G MAP REVISED: JULY 16,2014
3. MAP ENTITLED "PLAN OF LAND IN NEW BEDFORD, MASSACHUSETTS PREPARED FOR PETNEL PROPERTIES, LLC," PREPARED BY PRIME ENGINEERING, DATED MARCH 9,2004, RECORDED IN THE BRISTOL COUNTY REGISTRY OF DEEDS IN PLAN BOOK 153, PAGE 66.
4. MAP ENTITLED "APPROVAL NOT REQUIRED PLAN IN NEW BEDFORD, MASSACHUSETTS PREPARED FOR HIGHWAYVIEW, LLC," PREPARED BY PRIME ENGINEERING, DATED JUNE 12,2013, RECORDED IN THE BRISTOL COUNTY REGISTRY OF DEEDS IN PLAN BOOK 170, PAGE 66.
5. MAP ENTITLED "PLAN OF ACTIVITY & USE LIMITATION ON SUPERMARKET PARCEL IN NEW BEDFORD, MASSACHUSETTS PREPARED FOR SMCA LLC," PREPARED BY PRIMA ENGINEERING, DATED JUNE 21,2010, RECORDED IN THE BRISTOL COUNTY REGISTRY OF DEED IN PLAN BOOK 166, PAGE 44.
6. MAP ENTITLED "PLAN OF ACTIVITY & USE LIMITATION ON MULTI- USE PARCEL IN NEW BEDFORD, MASSACHUSETTS PREPARED FOR SMCA, LLC, DATED OCTOBER 20,2010, RECORDED IN THE BRISTOL COUNTY REGISTRY OF DEEDS IN PLAN BOOK 166, PAGE 57.
7. MAP ENTITLED "APPROVAL NOT REQUIRED PLAN OF FAIRHAVEN MILLS PROPERTY NEW BEDFORD MA," PREPARED BY ATLANTIC DESIGN ENGINEERS, INC., DATED JUNE 14,1989, RECORDED IN THE BRISTOL COUNTY REGISTRY OF DEEDS IN PLAN BOOK 123, PAGE 105.
8. MASSACHUSETTS HIGHWAY LAYOUT NO. 5329 OF 1963.
9. GAS MAPPING PROVIDED BY NSTAR GAS.

UTILITIES:

THE FOLLOWING COMPANIES WERE NOTIFIED BY MASSACHUSETTS ONE-CALL SYSTEM (1-888-344-7233) AND REQUESTED TO MARK OUT UNDERGROUND FACILITIES AFFECTING AND SERVICING THIS SITE. THE UNDERGROUND UTILITY INFORMATION SHOWN HEREON IS BASED UPON THE UTILITY COMPANIES RESPONSE TO THIS REQUEST.
SERIAL NUMBER(S): 20193807464

UTILITY COMPANY	PHONE NUMBER
AT&T TRANSMISSION	1-800-331-0500
VERIZON	1-800-922-0204
EVERSOURCE- ELECTRIC	1-800-286-2000
NSTAR GAS	1-800-592-2000
ESI ADVANCED WIRELESS NETWORKS, LLC	1-978-264-6000
COMCAST-PEMBROKE	1-800-934-6489
OPENCARE CORPORATION	1-508-362-2224

(1-888-344-7233) STOP - CALL BEFORE YOU DIG!

THE COMMONWEALTH OF MASSACHUSETTS REQUIRES NOTIFICATION BY EXCAVATORS, DESIGNERS, OR ANY PERSON PREPARING TO DISTURB THE EARTH'S SURFACE ANYWHERE IN THE COMMONWEALTH.

GRAPHIC SCALE

20 0 10 20 40 80

(IN FEET)
1 inch = 20 ft.

CONTROL POINT ASSOCIATES, INC.- ALL RIGHTS RESERVED.
THE COPYING OR REUSE OF THIS DOCUMENT, OR PORTIONS THEREOF, FOR OTHER THAN THE ORIGINAL PROJECT OR THE PURPOSE ORIGINALLY INTENDED, WITHOUT THE WRITTEN PERMISSION OF CONTROL POINT ASSOCIATES, INC., IS PROHIBITED.

No.	DESCRIPTION OF REVISION	FIELD CREW	DRAWN:	APPROVED:	DATE
1	REVISED TO INCLUDE ADDITIONAL FIELD DATA	C.W.	S.P.P.	G.L.H.	2021-01-04

THIS SURVEY HAS BEEN PERFORMED IN THE FIELD UNDER MY SUPERVISION, AND TO THE BEST OF MY KNOWLEDGE, BELIEF, AND INFORMATION, THIS SURVEY HAS BEEN PERFORMED IN ACCORDANCE WITH CURRENTLY ACCEPTED ACCURACY STANDARDS.

NOT A VALID ORIGINAL DOCUMENT UNLESS EMBOSSED WITH RAISED IMPRESSION OR STAMPED WITH A BLUE INK SEAL

COMMONWEALTH OF MASSACHUSETTS GERRY L. HOLDRIGHT NO. 49211 REGISTERED PROFESSIONAL LAND SURVEYOR

2021-01-04
DATE

GERRY L. HOLDRIGHT, PLS
MASSACHUSETTS PROFESSIONAL LAND SURVEYOR #49211

FIELD DATE: 12-29-20
FIELD BOOK NO.: 19-10MA
FIELD BOOK PG.: 58
FIELD CREW: J.A.
DRAWN: PV

BOUNDARY & TOPOGRAPHIC SURVEY
FUSS & O'NEILL, INC.
115 COGGESHALL STREET
MAP 86, LOT 10
CITY OF NEW BEDFORD, BRISTOL COUNTY
COMMONWEALTH OF MASSACHUSETTS

CONTROL POINT ASSOCIATES, INC.
352 TURNPIKE ROAD
SOUTHBOROUGH, MA 01772
508.948.3000 - 508.948.3003 FAX
ALBANY, NY 5182175010
CHALFONT, PA 2157129800
MANHATTAN, NY 6467800411
MT LAUREL, NJ 6098572099
WARREN, NJ 9086680099

REVIEWED:	APPROVED:	DATE	SCALE	FILE NO.	DWG. NO.
S.P.P	G.L.H.	12-30-20	1"=20'	03-190241	1 OF 1

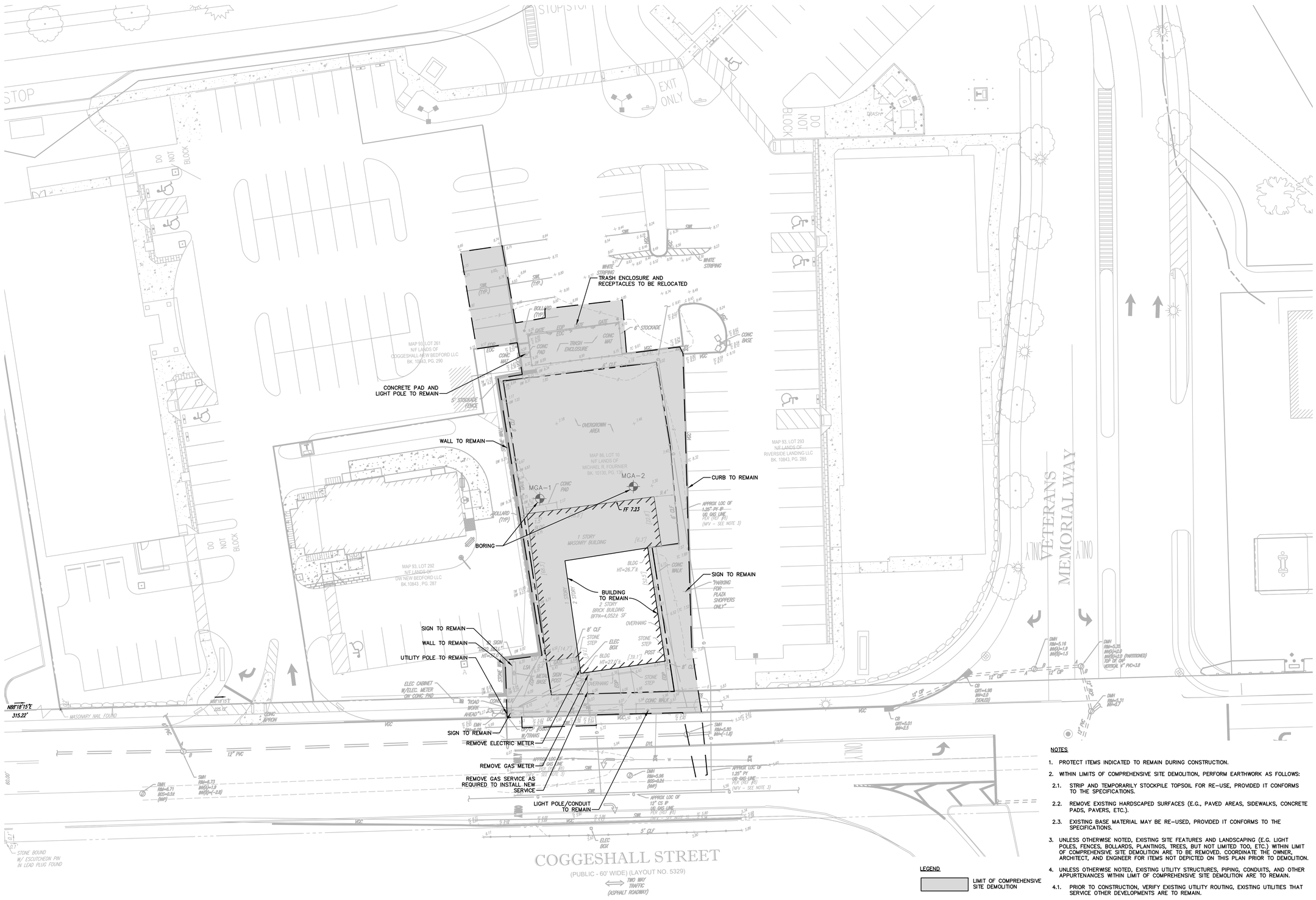

NOTES

1. PROTECT ITEMS INDICATED TO REMAIN DURING CONSTRUCTION.
2. WITHIN LIMITS OF COMPREHENSIVE SITE DEMOLITION, PERFORM EARTHWORK AS FOLLOWS:
   - 2.1. STRIP AND TEMPORARILY STOCKPILE TOPSOIL FOR RE-USE, PROVIDED IT CONFORMS TO THE SPECIFICATIONS.
   - 2.2. REMOVE EXISTING HARDSCAPED SURFACES (E.G., PAVED AREAS, SIDEWALKS, CONCRETE PADS, PAVERS, ETC.).
   - 2.3. EXISTING BASE MATERIAL MAY BE RE-USED, PROVIDED IT CONFORMS TO THE SPECIFICATIONS.
3. UNLESS OTHERWISE NOTED, EXISTING SITE FEATURES AND LANDSCAPING (E.G. LIGHT POLES, FENCES, BOLLARDS, PLANTINGS, TREES, BUT NOT LIMITED TOO, ETC.) WITHIN LIMIT OF COMPREHENSIVE SITE DEMOLITION ARE TO BE REMOVED. COORDINATE THE OWNER, ARCHITECT, AND ENGINEER FOR ITEMS NOT DEPICTED ON THIS PLAN PRIOR TO DEMOLITION.
4. UNLESS OTHERWISE NOTED, EXISTING UTILITY STRUCTURES, PIPING, CONDUITS, AND OTHER APPURTENANCES WITHIN LIMIT OF COMPREHENSIVE SITE DEMOLITION ARE TO REMAIN.
   - 4.1. PRIOR TO CONSTRUCTION, VERIFY EXISTING UTILITY ROUTING, EXISTING UTILITIES THAT SERVICE OTHER DEVELOPMENTS ARE TO REMAIN.
5. COORDINATE WITH OWNER FOR ITEMS TO BE SALVAGED.

LEGEND

- LIMIT OF COMPREHENSIVE SITE DEMOLITION
- LIMIT OF WORK

No.	DATE	DESCRIPTION	DESIGNER	REVIEWER

COMMONWEALTH OF MASSACHUSETTS
JEFFREY D. DENINGER
No. 49785
REGISTERED PROFESSIONAL ENGINEER

1/11/2021

SCALE:
HORZ.: 1" = 20'
VERT.:
DATUM:
HORZ.:
VERT.:
20 10 0 20
GRAPHIC SCALE

FUSS & O'NEILL
108 MYRTLE STREET, SUITE 502
QUINCY, MA 02171
617-282-4675
www.fando.com

ASCEND MASS, LLC

SITE PREPARATION PLAN

115 COGGESHALL STREET

NEW BEDFORD MASSACHUSETTS

PROJ. No.: 20191061.T10
DATE: 1/8/2021

CP-101

File Path: J:\DWG\P2019\1061\T10\Civil\Plan\20191061T10_DMO01.dwg Layout: CP-101 Plotted: Sun, January 10, 2021 - 2:51 PM User: jdeninger
Plotter: AUTOCAD PDF (GENERAL DOCUMENTATION).PC3 CTB File: FO.STB
MS VIEW:
LAYER STATE:

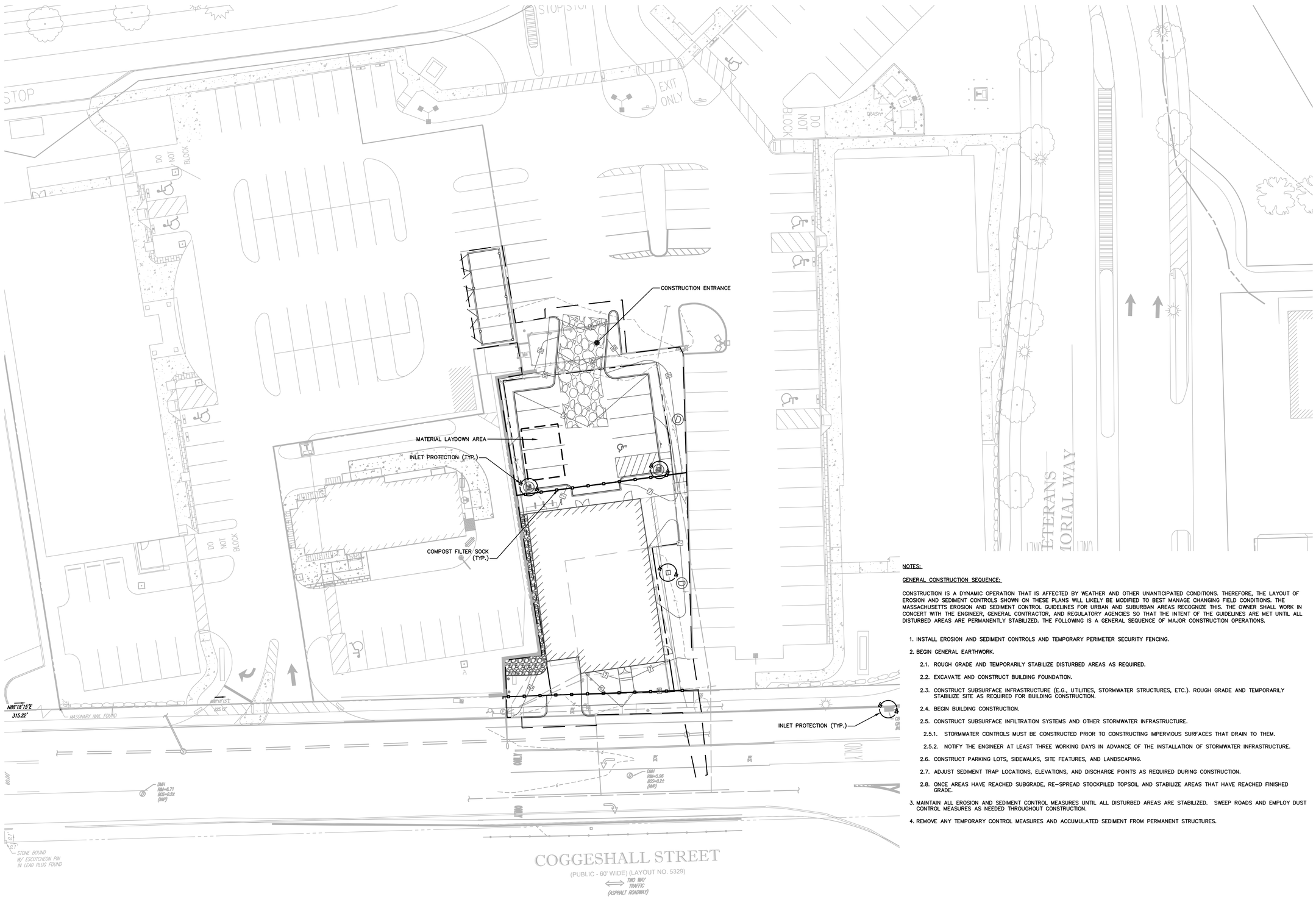

NOTES:

GENERAL CONSTRUCTION SEQUENCE:

CONSTRUCTION IS A DYNAMIC OPERATION THAT IS AFFECTED BY WEATHER AND OTHER UNANTICIPATED CONDITIONS. THEREFORE, THE LAYOUT OF EROSION AND SEDIMENT CONTROLS SHOWN ON THESE PLANS WILL LIKELY BE MODIFIED TO BEST MANAGE CHANGING FIELD CONDITIONS. THE MASSACHUSETTS EROSION AND SEDIMENT CONTROL GUIDELINES FOR URBAN AND SUBURBAN AREAS RECOGNIZE THIS. THE OWNER SHALL WORK IN CONCERT WITH THE ENGINEER, GENERAL CONTRACTOR, AND REGULATORY AGENCIES SO THAT THE INTENT OF THE GUIDELINES ARE MET UNTIL ALL DISTURBED AREAS ARE PERMANENTLY STABILIZED. THE FOLLOWING IS A GENERAL SEQUENCE OF MAJOR CONSTRUCTION OPERATIONS.

1. INSTALL EROSION AND SEDIMENT CONTROLS AND TEMPORARY PERIMETER SECURITY FENCING.
2. BEGIN GENERAL EARTHWORK.
   - 2.1. ROUGH GRADE AND TEMPORARILY STABILIZE DISTURBED AREAS AS REQUIRED.
   - 2.2. EXCAVATE AND CONSTRUCT BUILDING FOUNDATION.
   - 2.3. CONSTRUCT SUBSURFACE INFRASTRUCTURE (E.G., UTILITIES, STORMWATER STRUCTURES, ETC.). ROUGH GRADE AND TEMPORARILY STABILIZE SITE AS REQUIRED FOR BUILDING CONSTRUCTION.
   - 2.4. BEGIN BUILDING CONSTRUCTION.
   - 2.5. CONSTRUCT SUBSURFACE INFILTRATION SYSTEMS AND OTHER STORMWATER INFRASTRUCTURE.
     - 2.5.1. STORMWATER CONTROLS MUST BE CONSTRUCTED PRIOR TO CONSTRUCTING IMPERVIOUS SURFACES THAT DRAIN TO THEM.
     - 2.5.2. NOTIFY THE ENGINEER AT LEAST THREE WORKING DAYS IN ADVANCE OF THE INSTALLATION OF STORMWATER INFRASTRUCTURE.
   - 2.6. CONSTRUCT PARKING LOTS, SIDEWALKS, SITE FEATURES, AND LANDSCAPING.
   - 2.7. ADJUST SEDIMENT TRAP LOCATIONS, ELEVATIONS, AND DISCHARGE POINTS AS REQUIRED DURING CONSTRUCTION.
   - 2.8. ONCE AREAS HAVE REACHED SUBGRADE, RE-SPREAD STOCKPILED TOPSOIL AND STABILIZE AREAS THAT HAVE REACHED FINISHED GRADE.
3. MAINTAIN ALL EROSION AND SEDIMENT CONTROL MEASURES UNTIL ALL DISTURBED AREAS ARE STABILIZED. SWEEP ROADS AND EMPLOY DUST CONTROL MEASURES AS NEEDED THROUGHOUT CONSTRUCTION.
4. REMOVE ANY TEMPORARY CONTROL MEASURES AND ACCUMULATED SEDIMENT FROM PERMANENT STRUCTURES.

No.	DATE	DESCRIPTION	DESIGNER	REVIEWER

COMMONWEALTH OF MASSACHUSETTS
JASON M. ROBERTS
No. 48782
REGISTERED PROFESSIONAL ENGINEER
1/11/2021

SCALE:
HORZ.: 1" = 20'
VERT.:
DATUM:
HORZ.:
VERT.:
20 10 0 20
GRAPHIC SCALE

FUSS & O'NEILL
108 MYRTLE STREET, SUITE 502
QUINCY, MA 02171
617.262.4675
www.fando.com

ASCEND MASS, LLC
EROSION AND SEDIMENT CONTROL PLAN
115 COGGESHALL STREET
NEW BEDFORD MASSACHUSETTS

PROJ. No.: 20191061.T10
DATE: 1/8/2021

CE-101

File Path: J:\DWG\P2019\10611T10\Civil\Plan\20191061T10_DMO01.dwg Layout: CE-101 Plotted: Sun, January 10, 2021 - 2:52 PM User: jdeninger
Plotter: AUTOCAD PDF (GENERAL DOCUMENTATION).PC3 CTB File: FO.STB
MS VIEW:
LAYER STATE:

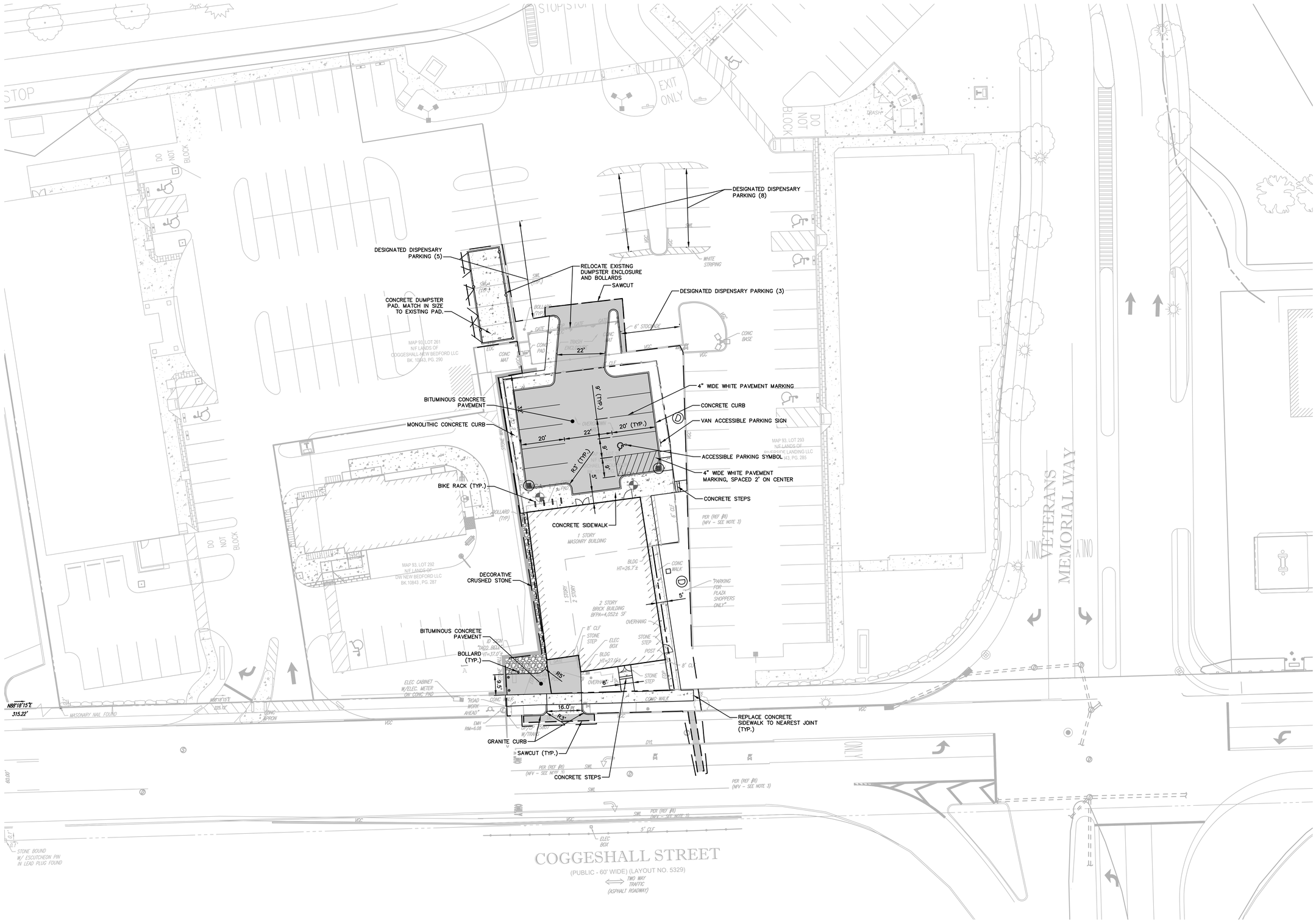

No.	DATE	DESCRIPTION	DESIGNER	REVIEWER

COMMONWEALTH OF MASSACHUSETTS
JASON M. MORTEO
No. 49785
REGISTERED PROFESSIONAL ENGINEER
1/11/2021

SCALE:
HORZ.: 1" = 20'
VERT.:
DATUM:
HORZ.:
VERT.:
20 10 0 20
GRAPHIC SCALE

FUSS & O'NEILL
108 MYRTLE STREET, SUITE 502
QUINCY, MA 02171
617.282.4675
www.fando.com

ASCEND MASS, LLC
SITE LAYOUT PLAN
115 COGGESHALL STREET
NEW BEDFORD MASSACHUSETTS

PROJ. No.: 20191061.T10
DATE: 1/8/2021

CS-101

File Path: J:\DWG\P2019\10611T10\Civil\Plan\20191061T10_STP01.dwg Layout: CS-101 Plotted: Sun, January 10, 2021 - 2:52 PM User: jdeninger
MS VIEW:
LAYER STATE:
Plotter: DWG To PDF.pc3 (GENERAL USE (ARCH D).PC3) CTB File: FO.STB

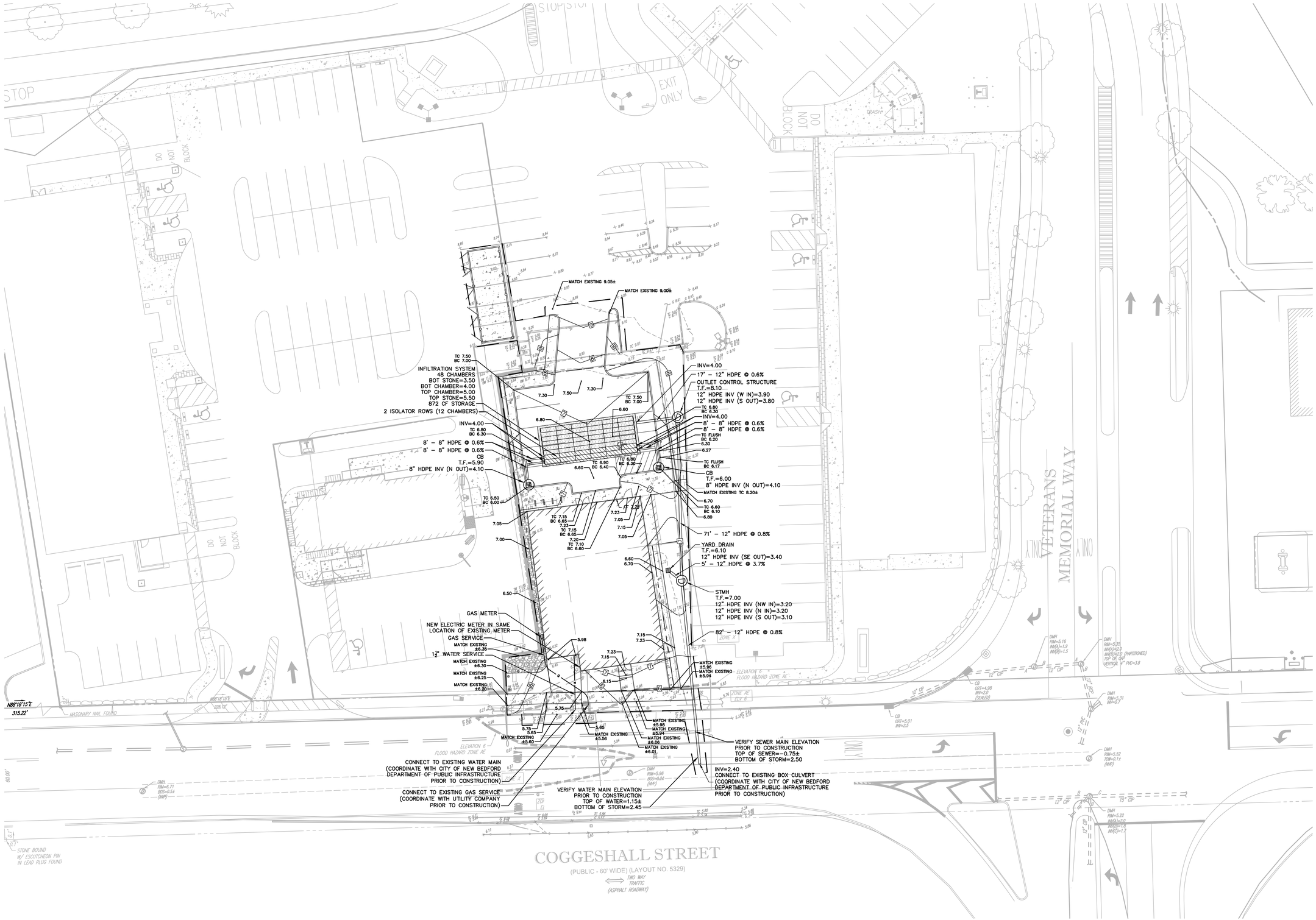

No.	DATE	DESCRIPTION	DESIGNER	REVIEWER

COMMONWEALTH OF MASSACHUSETTS
JASON M. STEE
No. 48785
REGISTERED PROFESSIONAL ENGINEER

1/11/2021

SCALE:
HORZ.: 1" = 20'
VERT.:
DATUM:
HORZ.:
VERT.:
20 10 0 20
GRAPHIC SCALE

FUSS & O'NEILL
108 MYRTLE STREET, SUITE 502
QUINCY, MA 02171
617.262.4675
www.fando.com

ASCEND MASS, LLC

GRADING, DRAINAGE, AND UTILITY PLAN

115 COGGESHALL STREET

NEW BEDFORD MASSACHUSETTS

PROJ. No.: 20191061.T10
DATE: 1/8/2021

CG-101

File Path: J:\DWG\P2019\10611T10\Civil\Plan\20191061T10_GRD01.dwg Layout: CG-101 Plotted: Sun, January 10, 2021 - 2:53 PM User: jdeninger
Plotter: AUTOCAD PDF (GENERAL DOCUMENTATION).PC3 CTB File: FO.STB
MS VIEW:
LAYER STATE:

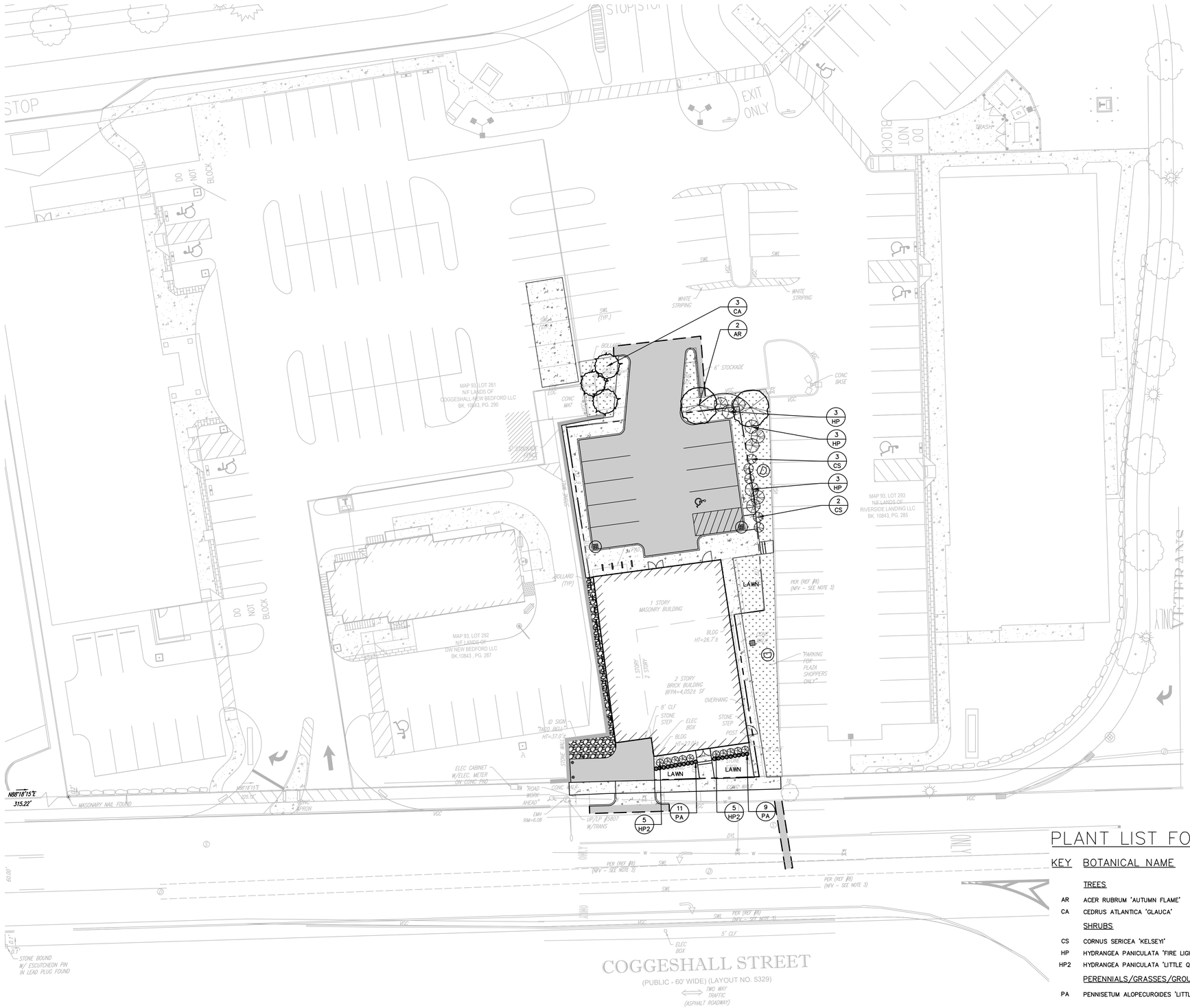

PLANTING NOTES:

1. ALL PLANTING MATERIAL TO BE NURSERY GROWN STOCK SUBJECT TO A.A.N. STANDARDS
2. SUPPLY ALL PLANTS IN QUANTITIES SUFFICIENT TO COMPLETE THE WORK SHOWN ON THE DRAWINGS AND LISTED IN THE PLANT LIST. IN THE EVENT OF A DISCREPANCY BETWEEN QUANTITIES SHOWN IN THE PLANT LIST AND THOSE REQUIRED BY THE DRAWINGS, THE LARGER NUMBER SHALL APPLY.
3. ALL PLANTS SHALL BE APPROVED PRIOR TO INSTALLATION AND SHALL BE LOCATED ON SITE FOR THE APPROVAL OF THE LANDSCAPE ARCHITECT. ANY INSTALLATIONS WHICH WERE NOT APPROVED BY THE LANDSCAPE ARCHITECT AND WHICH ARE SUBSEQUENTLY REQUESTED TO BE MOVED WILL BE DONE AT THE CONTRACTORS EXPENSE.
4. PRECISE LOCATION OF ITEMS NOT DIMENSIONED ON THE PLAN ARE TO BE FIELD STAKED SHALL BE SUBJECT TO THE REQUIREMENTS SPECIFIED IN THE PREVIOUS NOTE.
5. ALL SHRUB MASSINGS AND TREE PITS SHALL BE MULCHED TO A DEPTH OF 3" WITH SHREDDED CEDAR BARK MULCH.
6. TREES SHALL NOT BE STAKED UNLESS OTHERWISE NOTED.
7. BE RESPONSIBLE FOR ANY DAMAGED VEGETATION AND SHALL REPLACE OR REPAIR ANY DAMAGED MATERIAL, AT HIS OWN EXPENSE. CONTACT "DIG SAFE" AT 811 PRIOR TO CONSTRUCTION.
8. ALL SHRUB AND GROUNDCOVER PLANTING AREAS SHALL HAVE CONTINUOUS BEDS OF TOPSOIL 12" DEEP. ALL SOD AND HYDROSEED AREAS SHALL HAVE A MINIMUM TOPSOIL BED OF 6".
9. BE RESPONSIBLE FOR LOCATING ALL UTILITIES IN THE FIELD. WHERE PLANT MATERIAL MAY INTERFERE WITH UTILITIES, THE CONTRACTOR SHALL NOTIFY THE LANDSCAPE ARCHITECT TO COORDINATE THEIR INSTALLATION.
10. FOR PLANTING SOIL MIX, SEE SPECIFICATIONS OR PLANTING DETAILS.
11. ALL EXISTING RILL, GULLY OR CHANNEL EROSION SHALL BE FILLED WITH APPROPRIATE BACKFILL MATERIAL, FINE RAKED, SCARIFIED AND STABILIZED WITH APPROPRIATE VEGETATIVE MATERIAL AND / OR APPROPRIATE SEDIMENTATION AND EROSION CONTROL MEASURES.
12. ADJUSTMENTS IN THE LOCATION OF THE PROPOSED PLANT MATERIAL AS A RESULT OF EXISTING VEGETATION TO REMAIN SHALL BE APPROVED BY THE LANDSCAPE ARCHITECT PRIOR TO INSTALLATION.
13. BE RESPONSIBLE FOR ALL MAINTENANCE REPAIR AND REPLACEMENT OF PLANT MATERIAL, AS REQUIRED, FOR THE DURATION OF THE PROJECT AND SUBSEQUENT WARRANTY PERIOD.
14. PLANTINGS INSTALLED IN THE DRY SUMMER MONTHS AND / OR LAWN SEEDED OUT OF SPRING OR FALL PERIODS, IF ALLOWED BY OWNER, WILL REQUIRE AGGRESSIVE IRRIGATION PROGRAMS AT THE CONTRACTOR'S EXPENSE, UNLESS OTHERWISE DIRECTED BY THE OWNER.
15. UPON COMPLETION OF PLANTING, REMOVE FROM SITE ALL EXCESS SOIL, MULCH, AND MATERIALS AND DEBRIS RESULTING FROM WORK OPERATIONS. CLEAN UP SHOULD BE COMPLETED AT THE END OF EACH WORKING DAY. RESTORE TO ORIGINAL CONDITIONS ALL DAMAGED PAVEMENTS, PLANTING AREAS, STRUCTURES AND LAWN AREAS RESULTING FROM LANDSCAPING OPERATIONS.
16. SURVEY, LOCATE, AND PROTECT ALL TREES WITHIN AREAS SHOWN AS "EXISTING VEGETATION TO REMAIN" WITHIN THE DEVELOPMENT ENVELOPE FOR REVIEW BY L.A. PRIOR TO CLEARING OPERATIONS.
17. RESEED ALL DISTURBED AREAS.

PLANTING LEGEND

SHADE TREES

SHRUBS

GROUND COVERS

PLANT QUANTITY AND TYPE

PLANT LIST FOR BASE BID AREA

KEY	BOTANICAL NAME	COMMON NAME	QTY.	SIZE
	TREES			
AR	ACER RUBRUM 'AUTUMN FLAME'	AUTUMN FLAME RED MAPLE	2	3"–3.5" CAL.
CA	CEDRUS ATLANTICA 'GLAUCA'	BLUE ATLAS CEDAR	3	4'–5' HT.
	SHRUBS			
CS	CORNUS SERICEA 'KELSEYI'	KELSEY REDOSIER DOGWOOD	5	3 GAL.
HP	HYDRANGEA PANICULATA 'FIRE LIGHT'	FIRE LIGHT PANICLE HYDRANGEA	9	5 GAL.
HP2	HYDRANGEA PANICULATA 'LITTLE QUICK FIRE'	LITTLE QUICK FIRE PANICLE HYDRANGEA	10	5 GAL.
	PERENNIALS/GRASSES/GROUNDCOVERS			
PA	PENNISETUM ALOPECUROIDES 'LITTLE BUNNY'	LITTLE BUNNY DWARF FOUNTAIN GRASS	20	2 GAL.

No.	DATE	DESCRIPTION	DESIGNER	REVIEWER

MASSACHUSETTS JONATHAN ALLARD NO. 4205 REGISTERED LANDSCAPE ARCHITECT

1/11/2021

SCALE: HORZ.: 1" = 20' VERT.:
DATUM: HORZ.: VERT.:
20 10 0 20 GRAPHIC SCALE

FUSS & O'NEILL
108 MYRTLE STREET, SUITE 502
QUINCY, MA 02171
617.282.4675
www.fando.com

ASCEND MASS, LLC
LANDSCAPE PLAN
115 COGGESHALL STREET
NEW BEDFORD MASSACHUSETTS

PROJ. No.: 20191061.T10
DATE: 1/8/2021

LP-101

File Path: J:\DWG\P2019\10611T10\Civil\Plan\20191061T10_LND01.dwg Layout: LP-101 Plotted: Mon, January 11, 2021 - 9:37 AM User: jdeninger
MS VIEW:
LAYER STATE:
Plotter: DWG TO PDF.PC3 CTB File: FO.STB

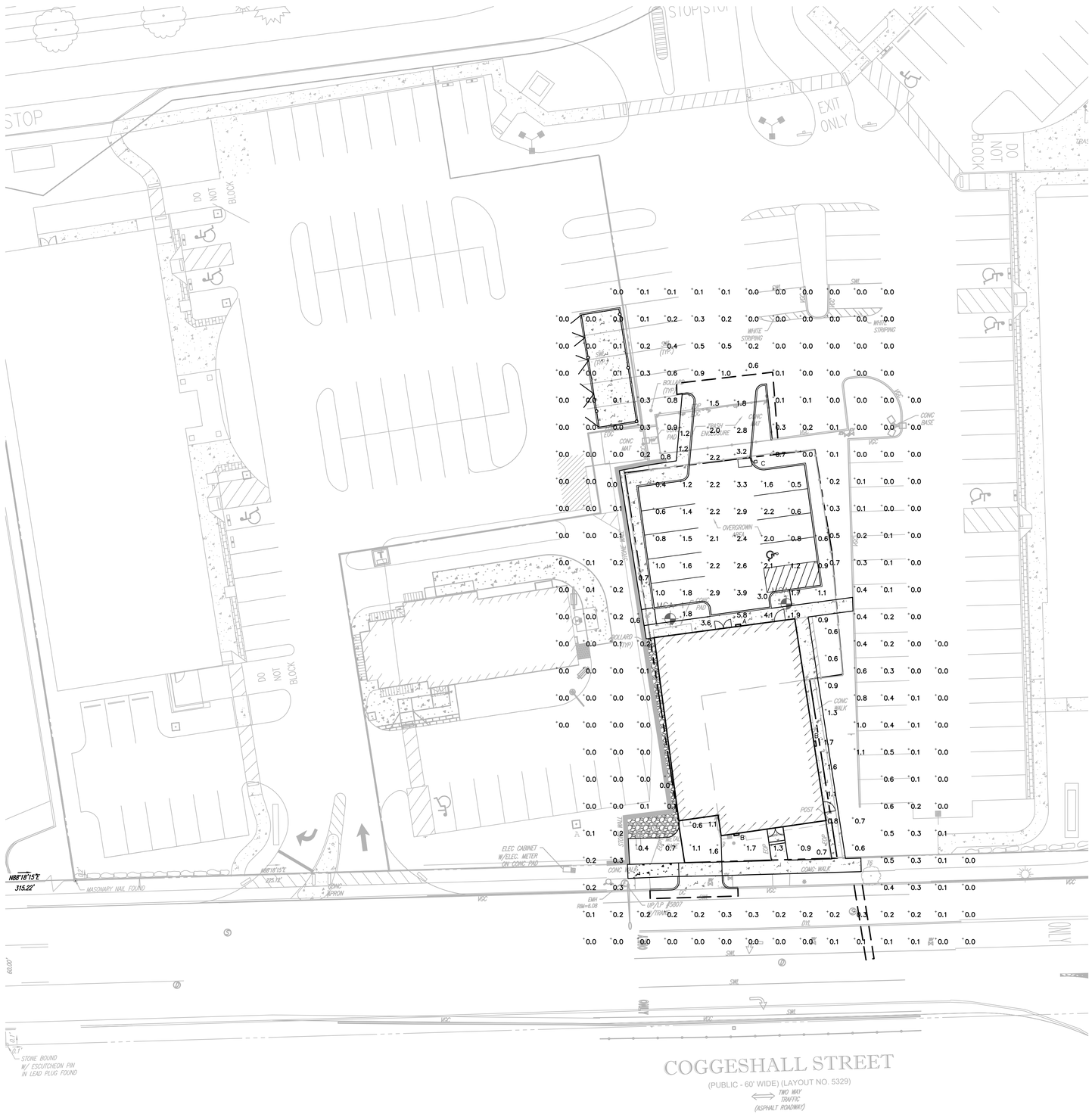

#	NAME	PARAMETER	MIN (FC)	MAX (FC)	AVERAGE (FC)	MEAN/MIN	MAX/MIN
1	Parking Lot and Entry Way	Horizontal Illuminance	0.40	5.80	1.92	4.80	14.50
2	Outside Property	Horizontal Illuminance	0.00	1.10	0.15	N/A	N/A
3	Building Walkways (East and South)	Horizontal Illuminance	0.4	1.70	1.00	2.50	4.25

TYPE	SYMBOL	MANUFACTURER	CATALOG NUMBER	WATTAGE (W)	LUMEN OUTPUT	COLOR TEMP (K)
A	▭	GARDCO	PWS-48L-300-NW-G2-4-UNV	47	6386	4000
B	▭	GARDCO	101L-16L-530-NW-G1-2-UNV	28	2944	4000
C	▯	GARDCO	GL13-1-3-85LA-8035-NW-UNV-IS	86	8064	4000

NOTES:

1. FIXTURE "C" SHALL BE PROVIDED WITH EXTERNAL HOUSE SIDE SHIELD.
2. FIXTURE "C" SHALL BE MOUNTED AT THE SAME HEIGHT AS EXISTING POLES OR AT 20'-0" MAXIMUM.
3. WALL PACK "B" SHALL BE MOUNTED AT 24'-3/4". COORDINATE FINAL MOUNTING HEIGHT WITH ARCHITECTURAL PLANS.
4. WALL PACK "A" SHALL BE MOUNTED AT 13'-3/4". COORDINATE FINAL MOUNTING HEIGHT WITH ARCHITECTURAL PLANS.

No.	DATE	DESCRIPTION	DESIGNER	REVIEWER

SCALE:
HORZ.: 1" = 20'
VERT.:
DATUM:
HORZ.:
VERT.:
20 10 0 20
GRAPHIC SCALE

FUSS & O'NEILL
108 MYRTLE STREET, SUITE 502
QUINCY, MA 02171
617.262.4675
www.fando.com

ASCEND MASS, LLC
SITE LIGHTING PLAN
115 COGGESHALL STREET
NEW BEDFORD MASSACHUSETTS

PROJ. No.: 20191061.T10
DATE: 1/8/2021

SL-101

File Path: J:\DWG\P2019\10611T10\Civil\Plan\20191061T10_SL01.dwg Layout: SL-101 Plotted: Sun, January 10, 2021 - 2:55 PM User: jdeninger
Plotter: AUTOCAD PDF (GENERAL DOCUMENTATION).PC3 CTB File: FO.STB
MS VIEW:
LAYER STATE:

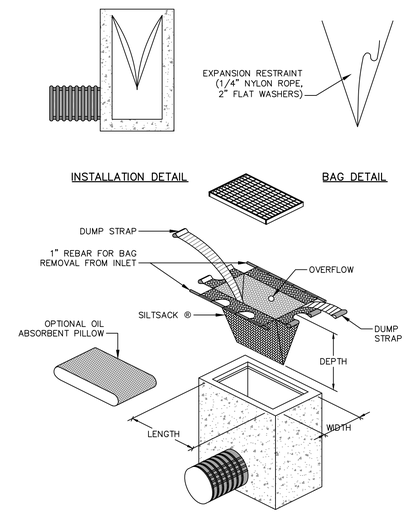

INLET PROTECTION

SCALE: NOT TO SCALE

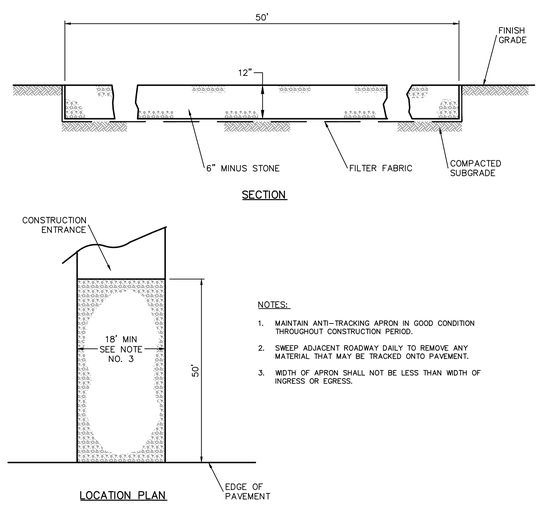

NOTES:

1. MAINTAIN ANTI-TRACKING APRON IN GOOD CONDITION THROUGHOUT CONSTRUCTION PERIOD.
2. SWEEP ADJACENT ROADWAY DAILY TO REMOVE ANY MATERIAL THAT MAY BE TRACKED ONTO PAVEMENT.
3. WIDTH OF APRON SHALL NOT BE LESS THAN WIDTH OF INGRESS OR EGRESS.

CONSTRUCTION ENTRANCE

SCALE: NOT TO SCALE

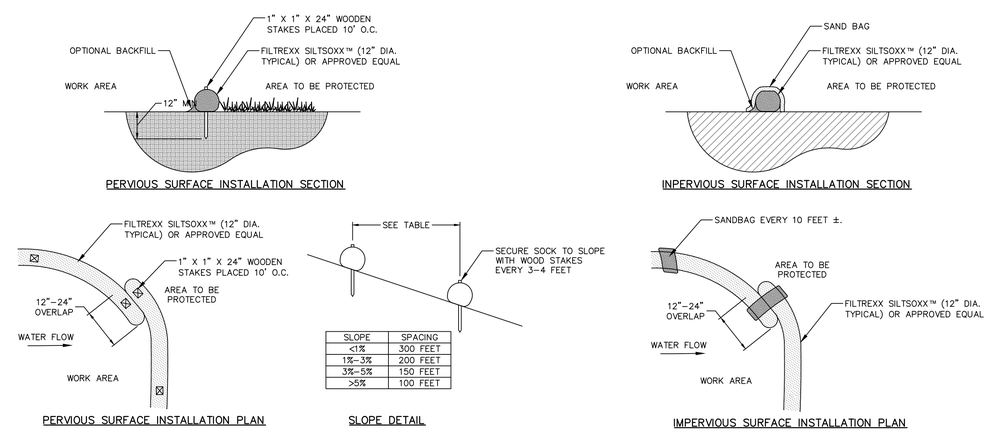

SLOPE	SPACING
<1%	300 FEET
1%-3%	200 FEET
3%-5%	150 FEET
>5%	100 FEET

NOTES:

1. FILTER MEDIA™ FILL TO MEET APPLICATION REQUIREMENTS.
2. COMPOST MATERIAL TO BE DISPERSED ON SITE, AS DETERMINED BY ENGINEER.
3. SLOPE SPACING BASED ON "MASSACHUSETTS EROSION AND SEDIMENT CONTROL GUIDELINES FOR URBAN AND SUBURBAN AREAS" FOR TEMPORARY DIVERSIONS.

COMPOST FILTER SOCK

SCALE: NOT TO SCALE

No.	DATE	DESCRIPTION	DESIGNER	REVIEWER

COMMONWEALTH OF MASSACHUSETTS
JASON M. O'NEILL
No. 48785
REGISTERED PROFESSIONAL ENGINEER
1/11/2021

SCALE:
HORZ.: N.T.S.
VERT.:
DATUM:
HORZ.:
VERT.:
0
GRAPHIC SCALE

FUSS & O'NEILL
108 MYRTLE STREET, SUITE 302
QUINCY, MA 02171
617-282-4475
www.fando.com

ASCEND MASS, LLC
EROSION AND SEDIMENT CONTROL DETAILS
115 COGGESHALL STREET
NEW BEDFORD MASSACHUSETTS

PROJ. No.: 20191061.T10
DATE: 1/8/2021

CD-501

File Path: J:\DWG\P2019\1061\T10\Civil\Plan\20191061T10_DET01.dwg Layout: CD-501 Plotted: Sun, January 10, 2021 - 2:55 PM User: jdeninger
MS VIEW:
LAYER STATE:
Plotter: AUTOCAD PDF (GENERAL DOCUMENTATION).PC3 CTB File: FO.STB

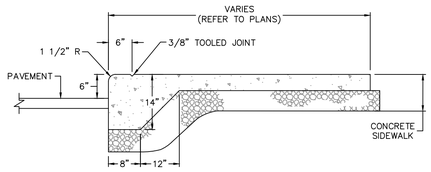

MONOLITHIC CONCRETE CURB

SCALE: NOT TO SCALE

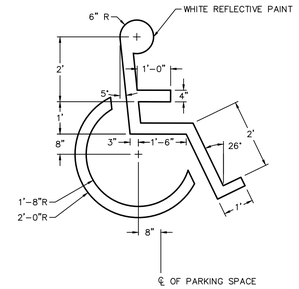

ACCESSIBLE PARKING SYMBOL

SCALE: NOT TO SCALE

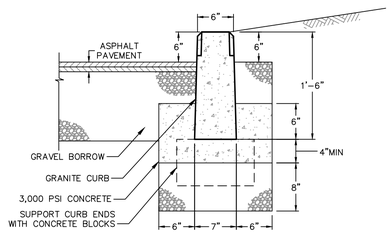

NOTES:

1. 1/2 INCH EXPANSION JOINT AND FILLER EVERY 30 FEET.
2. 1/2 INCH EXPANSION JOINT WHEN CURB IS ADJACENT TO CONCRETE SIDEWALK.

GRANITE CURB

SCALE: NOT TO SCALE

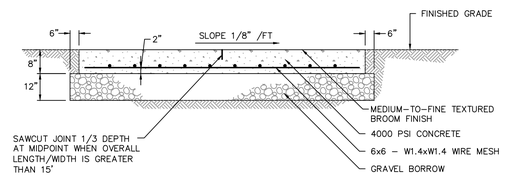

CONCRETE DUMPSTER PAD

SCALE: NOT TO SCALE

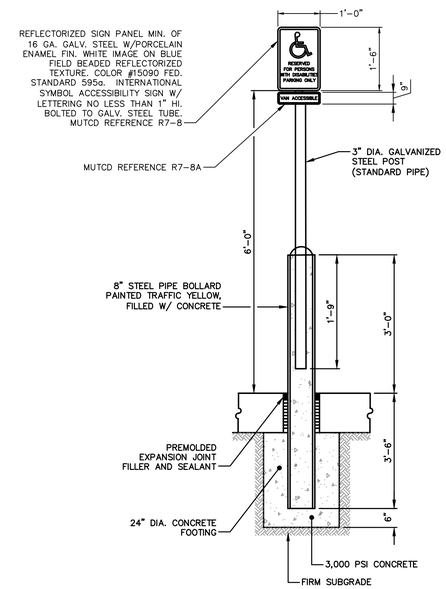

ACCESSIBLE PARKING SIGN

SCALE: NOT TO SCALE

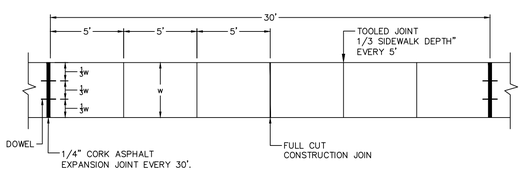

PLAN

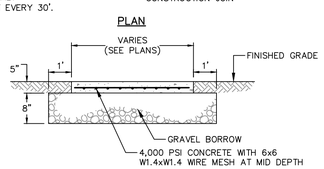

SIDEWALK SECTION

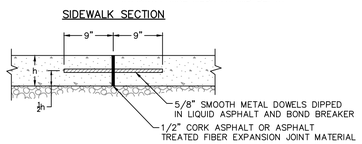

EXPANSION JOINT SECTION

NOTES:

1. PROVIDE DEEP DUMMY JOINT EVERY 5' (1/3 DEPTH OF SLAB)
2. REPLACE 1/4" EXPANSION JOINT IF EXISTING JOINT FALLS WITHIN RECONSTRUCTION.
3. PROVIDE JOINT SEALANT FOR EXPANSION JOINTS.

CONCRETE SIDEWALK

SCALE: NOT TO SCALE

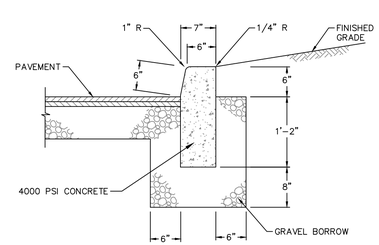

NOTES

1. 1 INCH DEEP BEVELED JOINT AT TOP AND FACE OF CURB EVERY 10 FEET.
2. 1/2 INCH EXPANSION JOINT AND FILLER EVERY 30 FEET.
3. 1/2 INCH EXPANSION JOINT AND FILLER WHEN CURB IS ADJACENT TO CONCRETE SIDEWALK.

CONCRETE CURB

SCALE: NOT TO SCALE

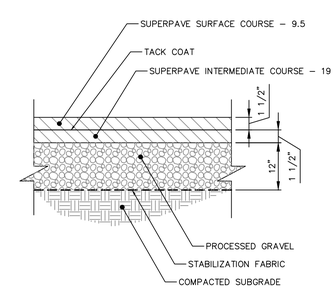

BITUMINOUS CONCRETE PAVEMENT

SCALE: NOT TO SCALE

No.	DATE	DESCRIPTION	DESIGNER	REVIEWER

COMMONWEALTH OF MASSACHUSETTS
JASON M. ROY
No. 50785
REGISTERED PROFESSIONAL ENGINEER
1/11/2021

SCALE:
HORZ.: N.T.S.
VERT.:
DATUM:
HORZ.:
VERT.:
0
GRAPHIC SCALE

FUSS & O'NEILL
108 MYRTLE STREET, SUITE 502
QUINCY, MA 02171
617.282.4675
www.fando.com

ASCEND MASS, LLC
SITE DETAILS
115 COGGESHALL STREET
NEW BEDFORD MASSACHUSETTS

PROJ. No.: 20191061.T10
DATE: 1/8/2021

CD-502

File Path: J:\DWG\P2019\1061\T10\Civil\Plan\20191061T10_DET01.dwg Layout: CD-502 Plotted: Sun, January 10, 2021 - 2:55 PM User: jdeninger
Plotter: AUTOCAD PDF (GENERAL DOCUMENTATION).PC3 CTB File: FO.STB
MS VIEW:
LAYER STATE:

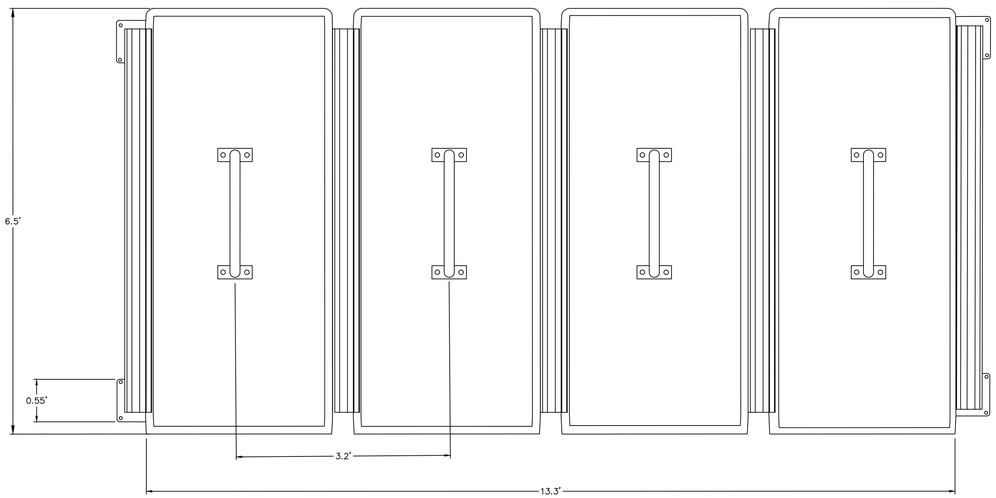

PLAN VIEW

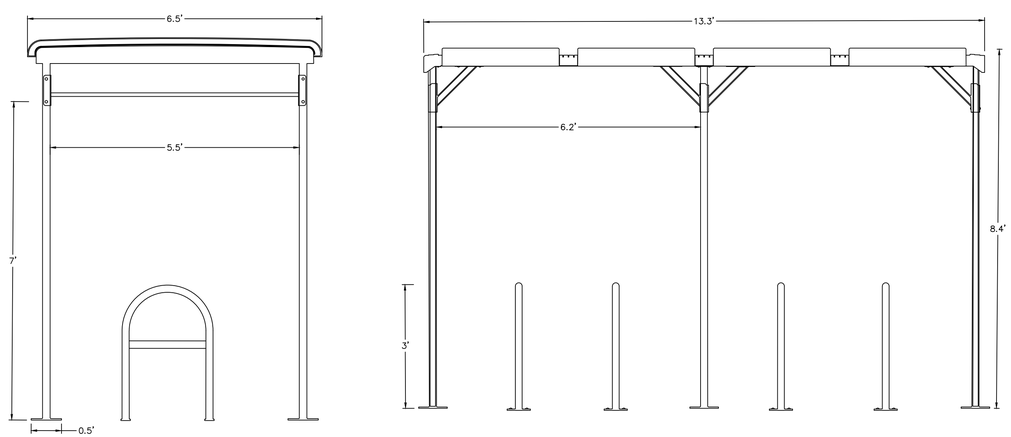

ELEVATION

NOTES:
1. REPRESENTATIVE BIKE RACK DETAIL. ACTUAL BIKE RACK TO BE SELECTED BY OWNERSHIP.

BIKE RACK

SCALE: NOT TO SCALE

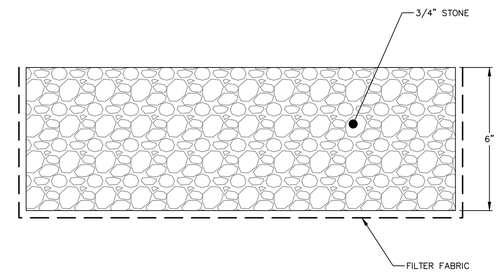

DECORATIVE CRUSHED STONE

SCALE: NOT TO SCALE

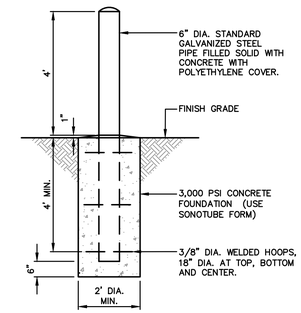

NOTE:
1. WHERE BOLLARDS ARE SET IN HARDSCAPED AREAS (E.G. PAVEMENTS, PAVERS, CONCRETE, ETC.), THE TOP OF CONCRETE FOUNDATION SHALL BE SET 4 INCHES BELOW GRADE OR BELOW THE LOWEST HARDSCAPE COURSE.

BOLLARD

SCALE: NOT TO SCALE

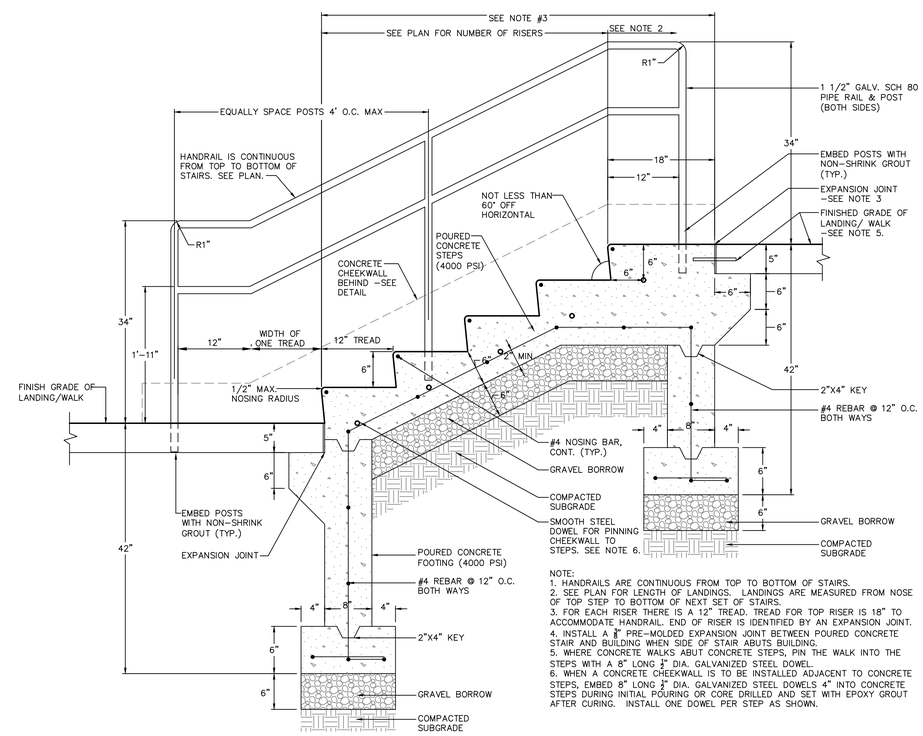

NOTE:
1. HANDRAILS ARE CONTINUOUS FROM TOP TO BOTTOM OF STAIRS.
2. SEE PLAN FOR LENGTH OF LANDINGS. LANDINGS ARE MEASURED FROM NOSE OF TOP STEP TO BOTTOM OF NEXT SET OF STAIRS.
3. FOR EACH RISER THERE IS A 12" TREAD. TREAD FOR TOP RISER IS 18" TO ACCOMMODATE HANDRAIL. END OF RISER IS IDENTIFIED BY AN EXPANSION JOINT.
4. INSTALL A ½" PRE-MOLDED EXPANSION JOINT BETWEEN POURED CONCRETE STAIR AND BUILDING WHEN SIDE OF STAIR ABUTS BUILDING.
5. WHERE CONCRETE WALKS ABUT CONCRETE STEPS, PIN THE WALK INTO THE STEPS WITH A 8" LONG ½" DIA. GALVANIZED STEEL DOWEL.
6. WHEN A CONCRETE CHEEKWALL IS TO BE INSTALLED ADJACENT TO CONCRETE STEPS, EMBED 8" LONG ½" DIA. GALVANIZED STEEL DOWELS 4" INTO CONCRETE STEPS DURING INITIAL POURING OR CORE DRILLED AND SET WITH EPOXY GROUT AFTER CURING. INSTALL ONE DOWEL PER STEP AS SHOWN.

CONCRETE STEPS

SCALE: NOT TO SCALE

No.	DATE	DESCRIPTION	DESIGNER	REVIEWER

COMMONWEALTH OF MASSACHUSETTS
JEFFREY S. BETES
No. 48785
REGISTERED PROFESSIONAL ENGINEER
1/11/2021

SCALE:
HORZ.: N.T.S.
VERT.:
DATUM:
HORZ.:
VERT.:
0
GRAPHIC SCALE

FUSS & O'NEILL
108 MYRTLE STREET, SUITE 502
QUINCY, MA 02171
617.282.4673
www.fando.com

ASCEND MASS, LLC
SITE DETAILS
115 COGGESHALL STREET
NEW BEDFORD MASSACHUSETTS

PROJ. No.: 20191061.T10
DATE: 1/8/2021

CD-503

File Path: J:\DW\GIP2019\1061\T10\Civil\Plan\20191061T10_DET01.dwg Layout: CD-503 Plotted: Sun. January 10, 2021 - 2:56 PM User: jdeninger
Plotter: AUTOCAD PDF (GENERAL DOCUMENTATION).PC3 CTB File: FO.STB
MS VIEW:
LAYER STATE:

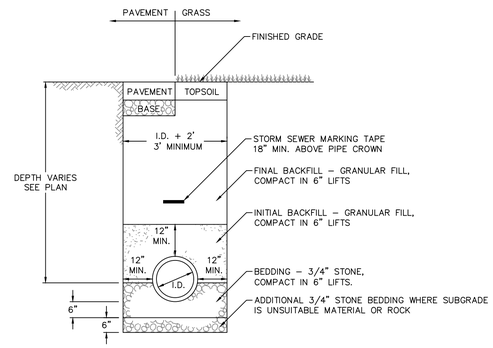

STORM SEWER TRENCH

SCALE: NOT TO SCALE

NOTES

1. UNLESS OTHERWISE NOTED, INTERIOR DIAMETER (D) SHALL BE 4 FEET. AT A MINIMUM, INTERIOR DIAMETER SHALL BE 6" LARGER THAN THE LARGEST DIAMETER PIPE.
2. FRAME AND GRATE SHALL CONFORM TO MASSACHUSETTS DEPARTMENT OF TRANSPORTATION CONSTRUCTION STANDARD DETAILS:
   - 2.1. CATCH BASINS
     - 2.1.1. E204.2.0 WHERE ADJACENT TO CURBS.
     - 2.1.2. E201.6.0 IN OTHER AREAS.
     - 2.1.3. GRATES SHALL COMPLY WITH E201.10.0 EXCEPT THAT THE OPENINGS SHALL BE 1.5"–2" SQUARE.
   - 2.2. MANHOLES
     - 2.2.1. E202.6.0 AND E202.8.0.
     - 2.2.2. MANHOLE COVERS SHALL HAVE "DRAIN" CAST INTO THE COVER.
3. CATCH BASIN HOODS SHALL CONFORM CONFORM TO MASSACHUSETTS DEPARTMENT OF TRANSPORTATION CONSTRUCTION STANDARD DETAILS E201.12.0.
4. STEPS SHALL CONFORM TO ASTM C478.
5. STRUCTURES SHALL BE DESIGNED FOR HS–20 LOADING.
6. REINFORCING STEEL SHALL CONFORM TO ASTM A185.
7. WATERTIGHT GASKET JOINTS SHALL BE BUTYL RESIN CONFORMING TO ASTM C990.
8. FLAT TOP SECTIONS ARE TO BE USED FOR STRUCTURE WITH AN INTERIOR DIAMETER (D) OF 6 FEET OR GREATER AND WHEN REQUIRED DUE TO PIPE COVER.

STORM STRUCTURE NOTES

SCALE: NOT TO SCALE

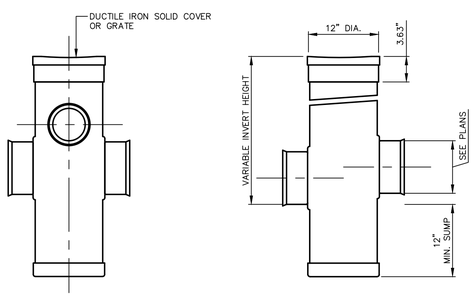

NOTE:
GRATES AND SOLID COVERS SHALL BE 12" DIAMETER DROP–IN STYLE.

YARD DRAIN

SCALE: NOT TO SCALE

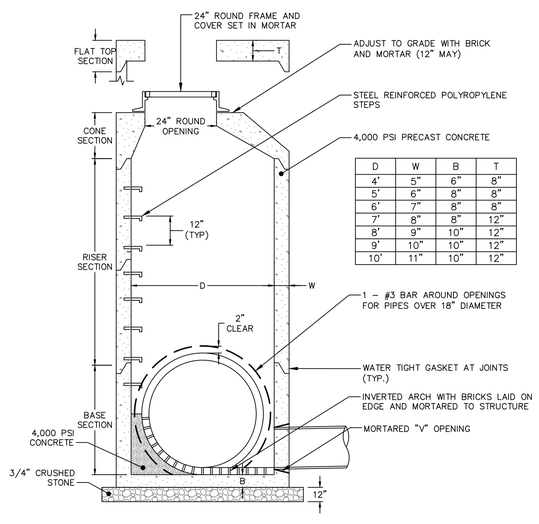

D	W	B	T
4'	5"	6"	8"
5'	6"	8"	8"
6'	7"	8"	8"
7'	8"	8"	12"
8'	9"	10"	12"
9'	10"	10"	12"
10'	11"	10"	12"

STORM MANHOLE (DMH)

SCALE: NOT TO SCALE

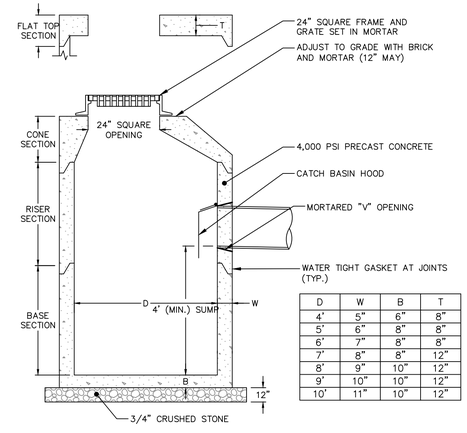

D	W	B	T
4'	5"	6"	8"
5'	6"	8"	8"
6'	7"	8"	8"
7'	8"	8"	12"
8'	9"	10"	12"
9'	10"	10"	12"
10'	11"	10"	12"

PRECAST CONCRETE CATCH BASIN (CB)

SCALE: NOT TO SCALE

No.	DATE	DESCRIPTION	DESIGNER	REVIEWER

COMMONWEALTH OF MASSACHUSETTS
JASON M. ONEILL
No. 49785
REGISTERED PROFESSIONAL ENGINEER
1/11/2021

SCALE:
HORZ.: N.T.S.
VERT.:
DATUM:
HORZ.:
VERT.:
0
GRAPHIC SCALE

FUSS & O'NEILL
108 MYRTLE STREET, SUITE 302
QUINCY, MA 02171
617-282-4475
www.fando.com

ASCEND MASS, LLC
STORMWATER MANAGEMENT DETAILS
115 COGGESHALL STREET
NEW BEDFORD MASSACHUSETTS

PROJ. No.: 20191061.T10
DATE: 1/8/2021

CD-504

File Path: J:\DWG\P2019\1061\T10\Civil\Plan\20191061T10_DET01.dwg Layout: CD-504 Plotted: Sun, January 10, 2021 - 2:56 PM User: jdeninger
Plotter: AUTOCAD PDF (GENERAL DOCUMENTATION).PC3 CTB File: FO.STB
MS VIEW:
LAYER STATE:

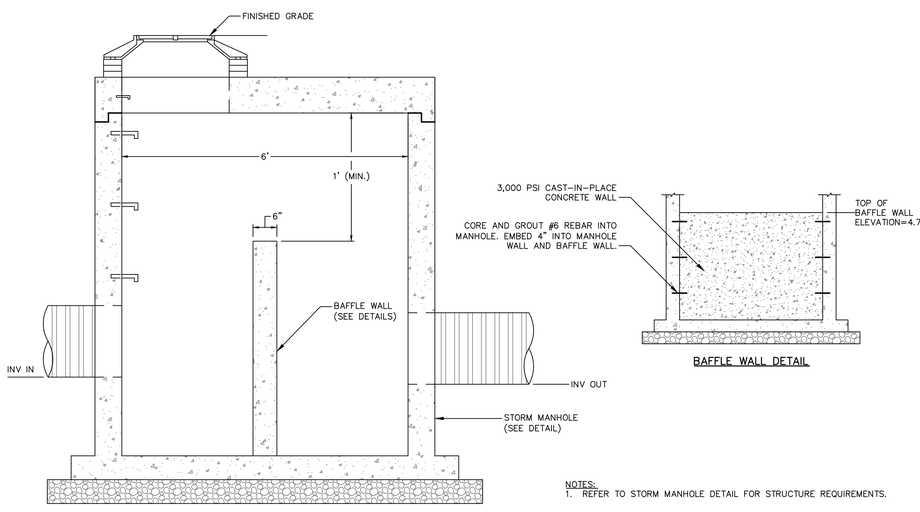

NOTES:
1. REFER TO STORM MANHOLE DETAIL FOR STRUCTURE REQUIREMENTS.

OUTLET CONTROL STRUCTURE

SCALE: NOT TO SCALE

StormTech® ADS®

STORMTECH SC-160LP CHAMBER

Designed to meet the most stringent industry performance standards for superior structural integrity while providing designers with a cost-effective method to save valuable land and protect water resources. The StormTech system is designed primarily to be used under parking lots, thus maximizing land usage for commercial and municipal applications. StormTech chambers can also be used in conjunction with Green Infrastructure, thus enhancing the performance and extending the service life of these practices.

The SC-160LP chamber was developed for infiltration and detention in shallow cover applications

- Only 14" (350 mm) required from top of chamber to bottom of pavement
- Only 12" (300 mm) tall

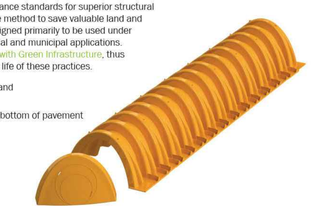

STORMTECH SC-160LP CHAMBER
(not to scale)

Nominal Chamber Specifications

Size (L x W x H)
85.4" x 25" x 12"
2,170 mm x 635 mm x 305 mm

Chamber Storage
6.85 ft³ (.19 m³)

Min. Installed Storage*
15.0 ft³ (0.42 m³)

Weight
24.0 lbs (10.9 kg)

Shipping
132 chambers/pallet
144 end caps/pallet
12 pallets/truck

*Assumes 6" (150 mm) stone above, 4" (100 mm) below and stone between chambers with 40% stone porosity.

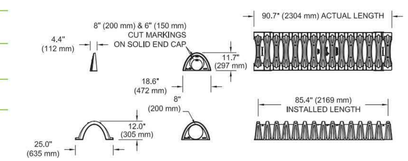

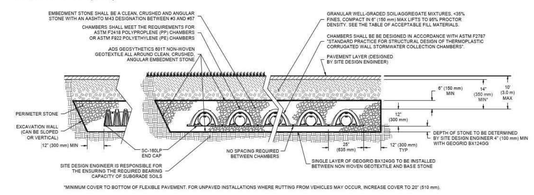

*MINIMUM COVER TO BOTTOM OF FLEXIBLE PAVEMENT. FOR UNPAVED INSTALLATIONS WHERE RUTTING FROM VEHICLES MAY OCCUR, INCREASE COVER TO 20" (510 mm).

SC-160LP CUMULATIVE STORAGE VOLUMES PER CHAMBER

Assumes 40% Stone Porosity. Calculations are Based Upon a 4" (100 mm) Stone Base Under Chambers.

Depth of Water in System Inches (mm)		Cumulative Chamber Storage ft³ (m³)	Total System Cumulative Storage ft³ (m³)
22 (559)	Stone Cover	6.85 (0.194)	14.98 (0.424)
21 (533)		6.85 (0.194)	14.49 (0.410)
20 (508)		6.85 (0.194)	14.00 (0.396)
19 (483)		6.85 (0.194)	13.50 (0.382)
18 (457)		6.85 (0.194)	13.01 (0.368)
17 (432)		6.85 (0.194)	12.51 (0.354)
16 (406)		6.85 (0.194)	12.02 (0.340)
15 (381)		6.80 (0.193)	11.49 (0.325)
14 (356)		6.67 (0.189)	10.92 (0.309)
13 (330)		6.38 (0.181)	10.25 (0.290)
12 (305)		5.94 (0.168)	9.49 (0.269)
11 (279)		5.40 (0.153)	8.67 (0.246)
10 (254)		4.78 (0.135)	7.81 (0.221)
9 (229)		4.10 (0.116)	6.91 (0.196)
8 (203)		3.36 (0.095)	5.97 (0.169)
7 (178)		2.58 (0.073)	5.01 (0.142)
6 (152)		1.76 (0.050)	4.02 (0.114)
5 (127)		0.89 (0.025)	3.01 (0.085)
4 (102)	Stone Foundation	0 (0)	1.98 (0.056)
3 (76)		0 (0)	1.48 (0.042)
2 (51)		0 (0)	0.99 (0.028)
1 (25)		0 (0)	0.49 (0.014)

Note: Add 0.49 ft³ (0.014 m³) of storage for each additional inch (25 mm) of stone foundation.

AMOUNT OF STONE PER CHAMBER

ENGLISH TONS (yds³)	Stone Foundation Depth		
	4"	6"	9"
StormTech SC-160LP	1.1 (0.8)	1.2 (0.9)	1.3 (0.9)
METRIC KILOGRAMS (m³)	100 mm	150 mm	230 mm
StormTech SC-160LP	952 (0.7)	1,074 (0.8)	1,197 (0.8)

Note: Assumes 6" (150 mm) of stone above and only embedment stone between chambers.

VOLUME EXCAVATION PER CHAMBER YD³ (M³)

	Stone Foundation Depth		
	4" (100)	9" (200)	12" (300)
StormTech SC-160LP	1.4 (1.1)	1.8 (1.2)	1.8 (1.3)

Note: Assumes no row separation and 14" (350 mm) of cover. The volume of excavation will vary as depth of cover increases.

INFILTRATION SYSTEM

SCALE: NOT TO SCALE

No.	DATE	DESCRIPTION	DESIGNER	REVIEWER

COMMONWEALTH OF MASSACHUSETTS
JASON R. MELLO
No. 50785
REGISTERED PROFESSIONAL ENGINEER
1/11/2021

SCALE: HORZ.: N.T.S. VERT.:
DATUM: HORZ.: VERT.:
0 GRAPHIC SCALE

FUSS & O'NEILL
108 MYRTLE STREET, SUITE 502
QUINCY, MA 02171
617-282-4675
www.fando.com

ASCEND MASS, LLC
STORMWATER MANAGEMENT DETAILS
115 COGGESHALL STREET
NEW BEDFORD MASSACHUSETTS

PROJ. No.: 20191061.T10
DATE: 1/8/2021

CD-505

File Path: J:\DWG\P2019\1061\T10\Civil\Plan\20191061T10_DET01.dwg Layout: CD-505 Plotted: Sun, January 10, 2021 - 2:56 PM User: jdeninger Plotter: AUTOCAD PDF (GENERAL DOCUMENTATION).PC3 CTB File: FO.STB
MS VIEW: LAYER STATE:

Gullwing G13 LED area luminaire, small

Dimensions and EPA

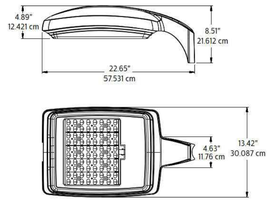

EPA Data		
1	2	3–4
.8 ft²	1.6 ft²	2.2 ft²
.07 m²	.15 m²	.20 m²

Approximate Weight Single Luminaire
33 lbs / 14.969 kg

GL13-MRI or GL13-APD-MRI Units

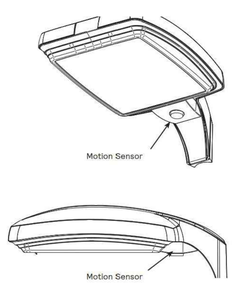

Technical Data

Ordering Code	Total LEDs	LED Current (mA)	Average System Watts[12]	Color Temp.	Type 2 Lumen Output[13, 14]	Type 2 Efficacy (LPW)	Type 2 BUG Rating	Type 3 Lumen Output[13, 14]	Type 3 Efficacy (LPW)	Type 3 BUG Rating
70LA-6435	64	350	70	4000K	6652	95	B2-U0-G1	6750	96	B1-U0-G2
85LA-8035	80	350	86	4000K	8064	95	B2-U0-G1	8173	95	B1-U0-G2
105LA-6453	64	530	101	4000K	9870	97	B2-U0-G2	9385	93	B2-U0-G2

Ordering Code	Total LEDs	LED Current (mA)	Average System Watts[12]	Color Temp.	Type 4 Lumen Output[13, 14]	Type 4 Efficacy (LPW)	Type 4 BUG Rating	Type 5 Lumen Output[13, 14]	Type 5 Efficacy (LPW)	Type 5 BUG Rating
70LA-6435	64	350	70	4000K	6731	96	B1-U0-G2	6657	95	B3-U0-G1
85LA-8035	80	350	86	4000K	8027	94	B1-U0-G2	8025	93	B3-U0-G2
105LA-6453	64	530	101	4000K	9388	93	B2-U0-G2	9139	90	B3-U0-G2

12. Wattage may vary by +/- 8% due to LED manufacturer forward volt specification and ambient temperature. Wattage shown is average for 120V through 277V input. Actual wattage may vary by an additional +/- 10% due to actual input voltage.
13. Contact Outdoorlighting.applications@philips.com for values not listed or if approximate estimates are required for design purposes.
14. LED arrays feature LEDs that provide from 90 to 100 lumens per watt when operated at 350 mA. Lumen values based on tests performed in compliance with IESNA LM-79.

Gullwing_GL13_LED 03/19 page 2 of 5

LIGHTING FIXTURE C

SCALE: NOT TO SCALE

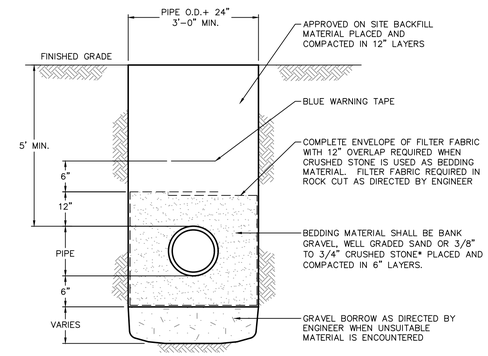

*CRUSHED STONE SHALL BE USED IN HIGH GROUNDWATER CONDITIONS AS DIRECTED BY THE ENGINEER.

WATER SERVICE TRENCH

SCALE: NOT TO SCALE

101L Sconce LED

Wall Mount

Luminaire Accessories (order separately)

Mounting accessories

Wall Mount

WS Wall Mounted Box for Surface Conduit

System accessories

Wireless system remote mount module

LLCR2-(F) #2 lens - specify finish in place of (F)
LLCR3-(F) #3 lens - specify finish in place of (F)

Central Remote Motion Response
(used connected to SiteWise main panel)

MS2-A-FVR-3
MS2-A-FVR-7

Wireless system remote controller accessory
Wireless system offers a remote radio/sensor module that allows to connected to a Limelight system (sold by other). Remote module can be mounted to wall or pole with j-box supplied. May be specified by choosing one of two different lenses to accommodate a variety of mounting heights/sensor detection ranges. Must specify option DD on luminaires that are planned to be used with remote mount controllers. See page 4 for Wireless system details.

Dimensions

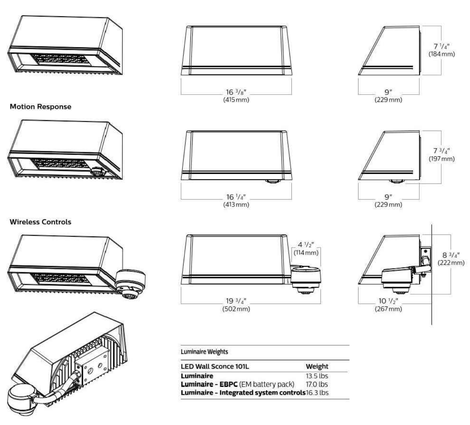

Luminaire Weights	
LED Wall Sconce 101L	**Weight**
Luminaire	13.5 lbs
Luminaire - EBPC (EM battery pack)	17.0 lbs
Luminaire - Integrated system controls	16.3 lbs

101L 10/18 page 2 of 7

LIGHTING WALL PACK B

SCALE: NOT TO SCALE

PWS PureForm LED wall sconce

wall mount

Luminaire Accessories (order separately)

Mounting Accessories

Wall Mount

PWS-WS-G2 Wall Mounted Box for Surface Conduit Painted Black

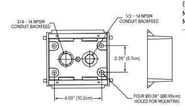

System accessories

Wireless system remote mount module

LLCR2-(F) #2 lens - specify finish in place of (F)
LLCR3-(F) #3 lens - specify finish in place of (F)

Central Remote Motion Response
(used connected to SiteWise main panel)

MS2-A-FVR-3
MS2-A-FVR-7

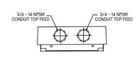

Wireless system remote controller accessory
Wireless system offers a remote radio/sensor module that allows connection to a Limelight system (sold by others). Remote module can be mounted to wall or pole with j-box supplied. May be specified by choosing one of two different lenses to accommodate a variety of mounting heights/sensor detection ranges. Must specify option DD on luminaires that are planned to be used with remote mount controllers.

Dimensions

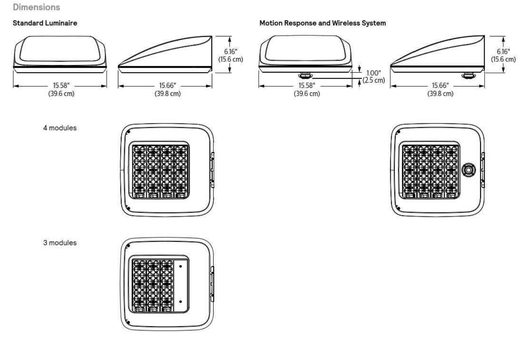

Luminaire Weights	
PureForm LED wall sconces PWS	**Weight**
Luminare	24 lbs
Luminaire - EBPC (EM battery pack)	27 lbs

PWS_PureForm_wall_sconce 05/20 page 2 of 6

LIGHTING WALL PACK A

SCALE: NOT TO SCALE

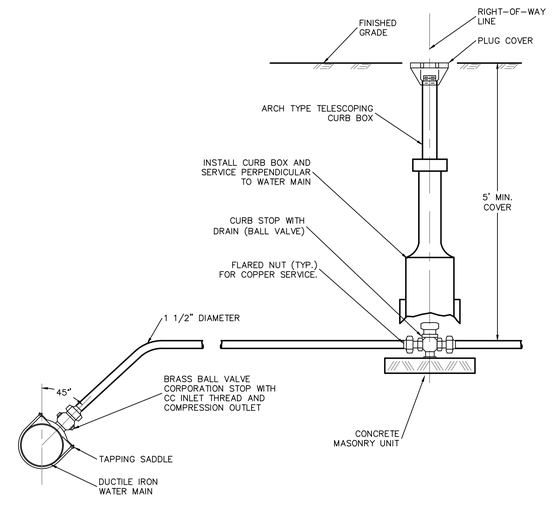

WATER SERVICE

SCALE: NOT TO SCALE

No.	DATE	DESCRIPTION	DESIGNER	REVIEWER

COMMONWEALTH OF MASSACHUSETTS
JASON R. MAIER
No. 50785
REGISTERED PROFESSIONAL ENGINEER
1/11/2021

SCALE: HORZ.: N.T.S. VERT.:
DATUM: HORZ.: VERT.:
0 GRAPHIC SCALE

FUSS & O'NEILL
108 MYRTLE STREET, SUITE 302
QUINCY, MA 02171
617-282-4475
www.fando.com

ASCEND MASS, LLC
UTILITY DETAILS
115 COGGESHALL STREET
NEW BEDFORD MASSACHUSETTS

PROJ. No.: 20191061.T10
DATE: 1/8/2021

CD-506

File Path: J:\DWG\P2019\1061\T10\Civil\Plan\20191061T10_DET01.dwg Layout: CD-506 Plotted: Sun, January 10, 2021 - 2:56 PM User: jdeninger
MS VIEW: LAYER STATE: Plotter: AUTOCAD PDF (GENERAL DOCUMENTATION).PC3 CTB File: FO.STB

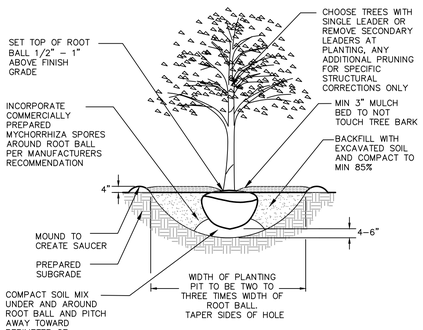

NOTES: REMOVE TREE WRAP, WIRE, STAKES, ANY SYNTHETIC MATERIAL. CUT AWAY MINIMUM OF TOP HALF OF BURLAP &/OR WIRE BASKET. SCARIFY ALL PLANT PITS PRIOR TO PLANTING

TREE PLANTING

SCALE: NOT TO SCALE

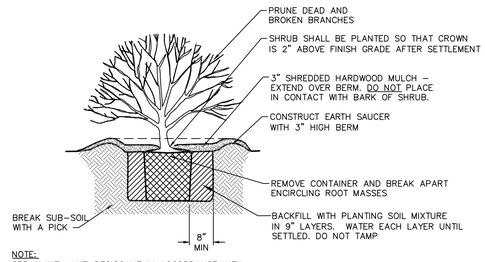

NOTE:
SPRAY WITH ANTI DESICCANT IN ACCORDANCE WITH MFG.'S RECOMMENDATIONS IF FOLIAGE IS PRESENT.

FOR CONTAINER GROWN SHRUBS, USE FINGERS OR SMALL HAND TOOLS TO PULL THE ROOTS OUT OF THE OUTER LAYER OF POTTING SOIL; THEN CUT OR PULL APART ANY ROOTS CIRCLING THE PERIMETER OF THE CONTAINER.

INCORPORATE COMMERCIALLY PREPARED MYCORRHIZA SPORES IN THE SOIL IMMEDIATELY AROUND THE ROOT BALL AT RATES SPECIFIED BY THE MANUFACTURER.

SHRUB PLANTING DETAIL FOR CONTAINERIZED SHRUBS

SCALE: NOT TO SCALE

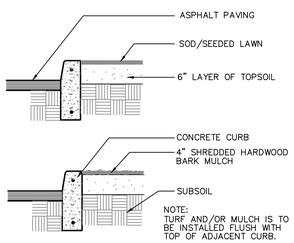

SOD/SHREDDED HARDWOOD BARK MULCH

SCALE: NOT TO SCALE

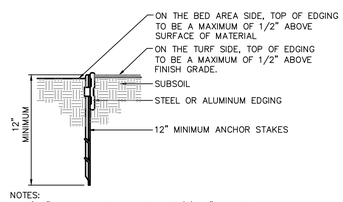

NOTES:
1. 16'–0" SECTIONS TO INCLUDE FIVE (5) 12" STAKES
2. 8'–0" SECTIONS TO INCLUDE THREE (3) 12" STAKES
3. COMPACT GRADES ADJACENT TO EDGING TO MINIMIZE SETTLING
4. CORNERS – CUT BASE OF EDGING HALF WAY AND FORM A CONTINUOUS CORNER.

LANDSCAPE BED EDGING

SCALE: NOT TO SCALE

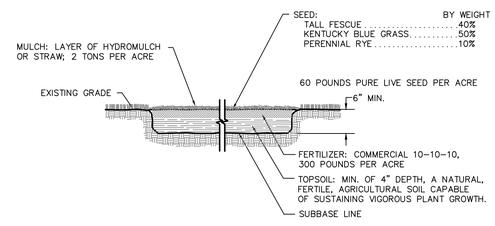

TOPSOIL, FERTILIZER, SEED & MULCH

SCALE: NOT TO SCALE

No.	DATE	DESCRIPTION	DESIGNER	REVIEWER

COMMONWEALTH OF MASSACHUSETTS
JASON D. ONEILL
No. 50785
REGISTERED PROFESSIONAL ENGINEER
1/11/2021

SCALE:
HORZ.: N.T.S.
VERT.:
DATUM:
HORZ.:
VERT.:
0
GRAPHIC SCALE

FUSS & O'NEILL
108 MYRTLE STREET, SUITE 302
QUINCY, MA 02171
617-282-4475
www.fando.com

ASCEND MASS, LLC
LANDSCAPE DETAILS
115 COGGESHALL STREET
NEW BEDFORD MASSACHUSETTS

PROJ. No.: 20191061.T10
DATE: 1/8/2021

CD-507

File Path: J:\DWG\P2019\1061\T10\Civil\Plan\20191061T10_DET01.dwg Layout: CD-507 Plotted: Sun, January 10, 2021 - 2:56 PM User: jdeninger
Plotter: AUTOCAD PDF (GENERAL DOCUMENTATION).PC3 CTB File: FO.STB
MS VIEW:
LAYER STATE: