

BC OnLine Land Title Internet Service
Provided in co-operation with
Land Title and Survey Authority

LAND TITLE AND SURVEY AUTHORITY - DOCUMENT RETRIEVAL WEB REQUEST

CLIENT NAME: RE/MAX REAL ESTATE SERVICES AS
ADDRESS: REALTY LTD.
410-650 WEST 41ST AVE NORTH OFFICE TOWER
VANCOUVER BC V5Z 2M9

PICK-UP INSTRUCTIONS:

USER ID: PA74746 APPLICATION NO.: BCS1399 VA PAGES: 019
ACCOUNT NO.: 199822 REQUESTED AT: 05-08-29 11:34
REFERENCE NO.: R37763 FOLIO NO.: VLAGAN

REMARKS:

BC OnLine Land Title Fax Service

Help Desk Victoria ..... (250) 953-8200
In B.C. 1-800-663-6102
Administration Office ... (250) 953-8250
Fax Number ..... (250) 953-8222

Persons who need to rely on a plan for legal purposes must examine the official version at the Land Title Office in which the plan is deposited.

The bylaw and common property sheets attached to strata plans have been repealed. Information regarding the bylaws and/or dealings affecting the common property of strata plans must be obtained from the general index and/or common property index on ALTOS. Refer to the BC OnLine user guide for access information.

FILED VABCS1399 R37763 2005-08-29-11.34.51.356590

STRATA PLAN BCS 1399

STRATA PLAN OF LOT 1
BLOCK 85 DISTRICT LOT 541 GROUP 1
NEW WESTMINSTER DISTRICT PLAN BCP2363

CITY OF VANCOUVER

B.C.G.S. 92G.025

0 20 40

SCALE 1 : 400 DISTANCES ARE IN METRES

DEPOSITED AND REGISTERED IN THE LAND TITLE OFFICE AT NEW WESTMINSTER B.C.
JULY 18 2005
Ian MacDonald LCP
REGISTRAR
Bx 549384 TO
Bx 549533

INTEGRATED SURVEY AREA No. 31 (VANCOUVER)
NAD83 (CSRS)

THIS PLAN SHOWS HORIZONTAL GROUND-LEVEL DISTANCES EXCEPT WHERE OTHERWISE NOTED. TO COMPUTE GRID DISTANCES, MULTIPLY GROUND-LEVEL DISTANCES BY COMBINED FACTOR, 0.9996008

CIVIC ADDRESS:
1001 – HOMER STREET
VANCOUVER, B.C.

"THE BENTLEY"

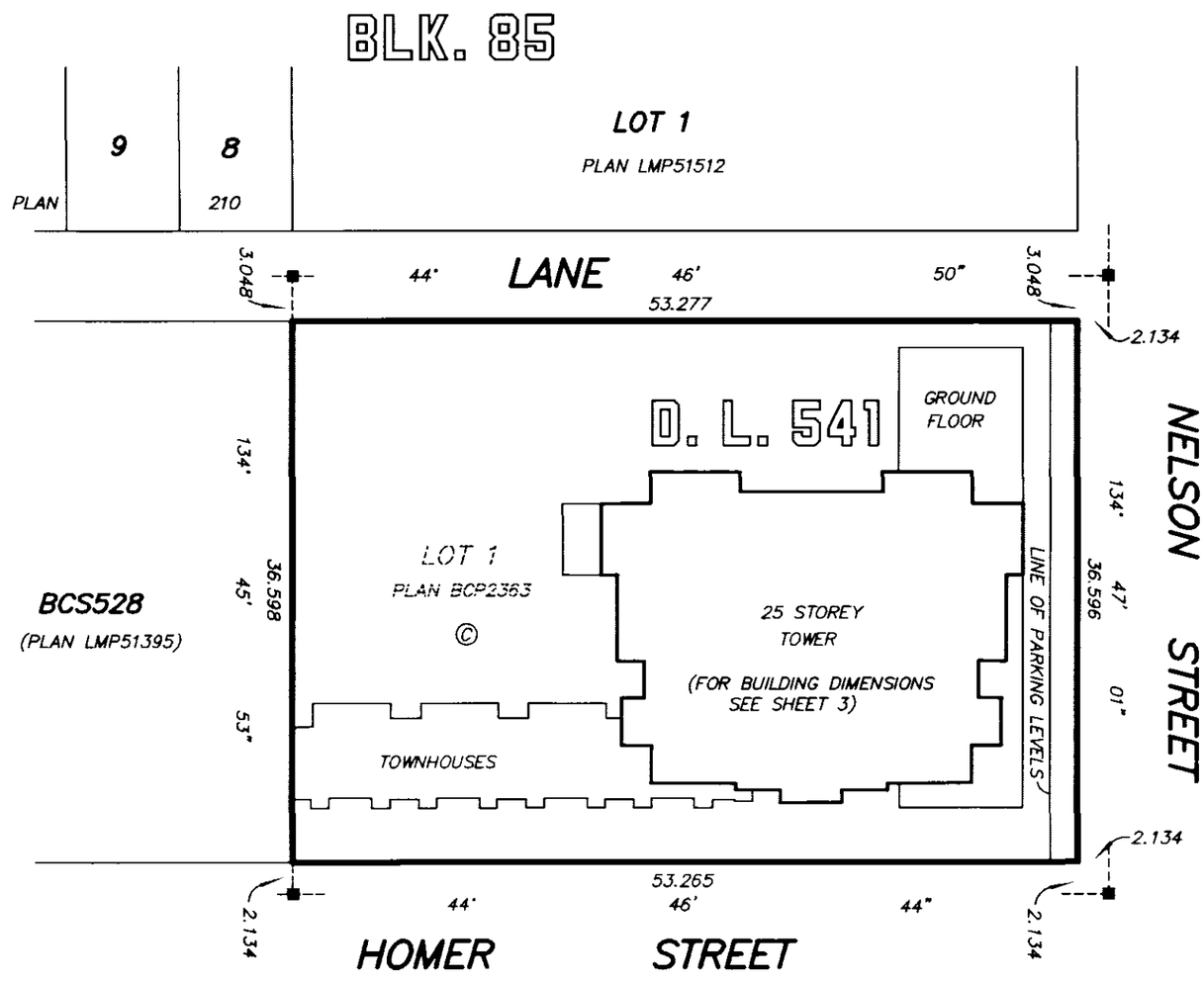

LEGEND

GRID BEARINGS ARE DERIVED FROM PLAN BCP2363

- ■ DENOTES LEAD PLUG FOUND
- SL. DENOTES STRATA LOT
- PT. DENOTES PART
- T DENOTES TOTAL
- m2 DENOTES SQUARE METRES
- (C) DENOTES COMMON PROPERTY
- (B) DENOTES BALCONY BEING LIMITED COMMON PROPERTY FOR EXCLUSIVE USE OF ADJOINING STRATA LOT
- (P) DENOTES PATIO BEING LIMITED COMMON PROPERTY FOR EXCLUSIVE USE OF ADJOINING STRATA LOT
- (D) DENOTES DUCT BEING COMMON PROPERTY
- (M) DENOTES MECHANICAL ROOM BEING COMMON PROPERTY
- (V) DENOTES VESTIBULE BEING COMMON PROPERTY
- (E) DENOTES ELECTRICAL ROOM BEING COMMON PROPERTY
- (B-60) DENOTES BALCONY BEING LIMITED COMMON PROPERTY FOR EXCLUSIVE USE OF STRATA LOT 60 (TYPICAL)
- (D-16) DENOTES DECK BEING LIMITED COMMON PROPERTY FOR EXCLUSIVE USE OF STRATA LOT 16 (TYPICAL)
- (P-4) DENOTES PATIO BEING LIMITED COMMON PROPERTY FOR EXCLUSIVE USE OF STRATA LOT 4 (TYPICAL)

I , GRANT BUTLER , A BRITISH COLUMBIA LAND SURVEYOR , OF DELTA , BRITISH COLUMBIA . CERTIFY THAT I WAS PRESENT AT AND PERSONALLY SUPERINTENDED THE SURVEY REPRESENTED BY THIS PLAN , AND THAT THE SURVEY AND PLAN ARE CORRECT . THE FIELD SURVEY WAS COMPLETED ON ON THE 20th DAY OF MAY, 2005 . THE PLAN WAS COMPLETED AND CHECKED, AND THE CHECKLIST FILED UNDER #32967 ON THE 20th DAY OF JUNE, 2005.

B.C.L.S.

DYCK & ASSOCIATES
PROFESSIONAL LAND SURVEYORS
4, 19089 94th AVENUE
SURREY, B.C. V4N 3S4
T. 604-513-9611 F. 604-513-2202
FILE : 2742\STRATA
DWG : 2742-S11

THIS PLAN LIES WITHIN THE GREATER VANCOUVER REGIONAL DISTRICT

ORIGINAL

STRATA PLAN BCS /399

STRATA PROPERTY ACT

OWNER:

POLYGON BENTLEY TOWER LTD.
(INC. No. 564417)

Name NEIL CHRYSTAL
Authorized Signatory

Name RALF SCHMIDTKE
Authorized Signatory

Ellen Louden
WITNESS AS TO BOTH SIGNATURES
Name ELLEN LOUDEN
DEVELOPMENT COORDINATOR
ADDRESS
900-1333 W. BROADWAY
VANCOUVER, BC, V6H 4C2
OCCUPATION OF WITNESS

MORTGAGEE

HSBC BANK CANADA

Name Dean Stewart
Authorized Signatory

Name Colin E. Bailey
Authorized Signatory

WITNESS AS TO BOTH SIGNATURES
Name A. Armenta
MANUELA
200-885 W. Georgia St.
ADDRESS
Vancouver, B.C. V6C 3E9
Banker.
OCCUPATION OF WITNESS

I, GRANT BUTLER, A BRITISH COLUMBIA LAND SURVEYOR CERTIFY THAT THE BUILDINGS SHOWN ON THIS STRATA PLAN ARE WITHIN THE EXTERNAL BOUNDARIES OF THE LAND THAT IS THE SUBJECT OF THE STRATA PLAN.
DATE: JUNE 20, 2005

B.C.L.S.

I, GRANT BUTLER, A BRITISH COLUMBIA LAND SURVEYOR CERTIFY THAT THE BUILDINGS INCLUDED IN THIS STRATA PLAN HAVE NOT, AS OF JUNE 20, 2005 BEEN PREVIOUSLY OCCUPIED.

B.C.L.S.

JUNE 20, 2005
DWG : 2742-S11

ORIGINAL

FILED VABCS1399 R37763 2005-08-29-11.34.51.356590

BUILDING LOCATION

STRATA PLAN BCS /399

0 5 10 15

SCALE 1:200 DISTANCES ARE IN METRES



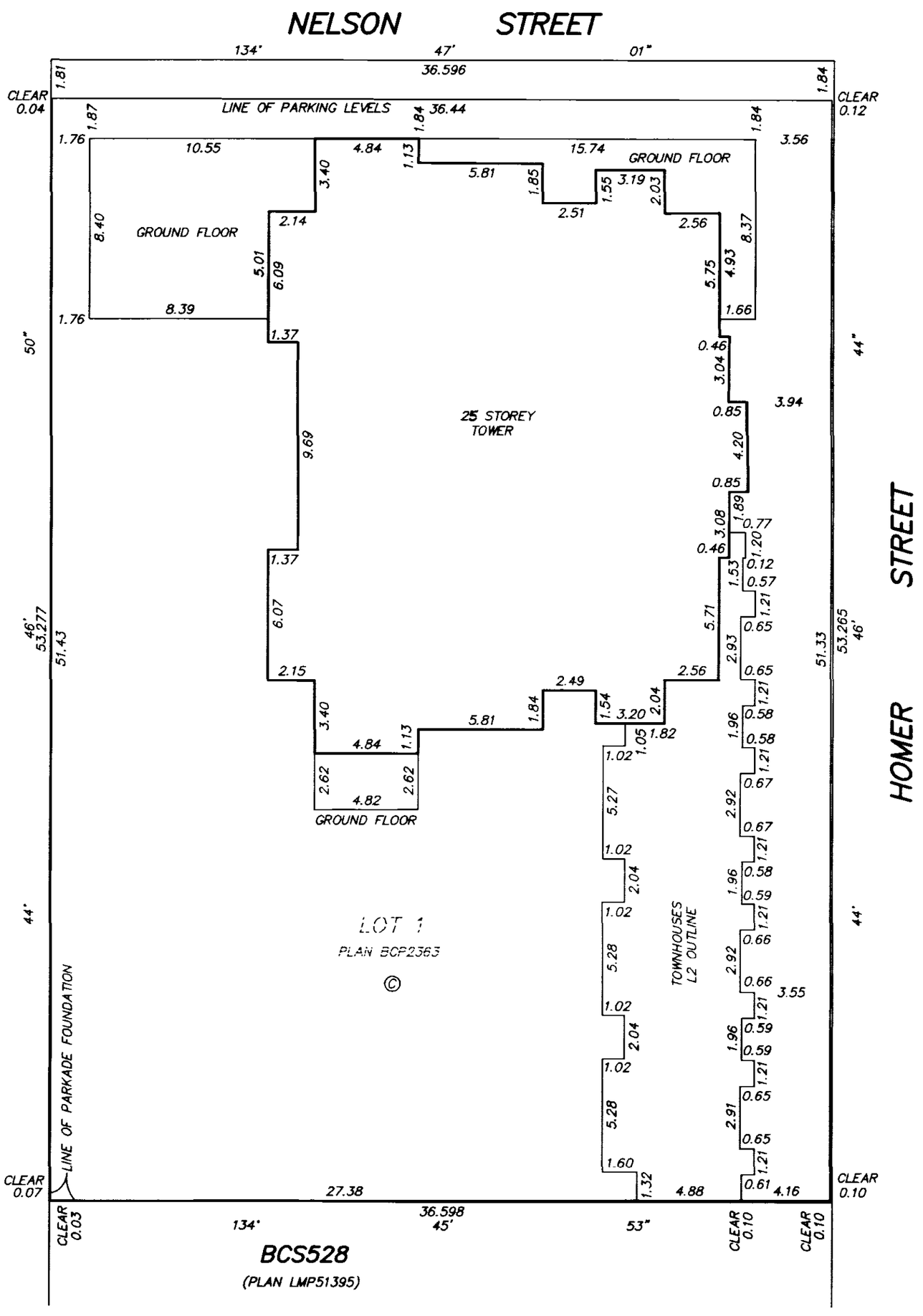

JUNE 20, 2005
DWG: 2742–S11

ORIGINAL

FILED VABCS1399 R37763 2005-08-29-11.34.51.356590

FLOOR PLANS

STRATA PLAN BCS 1399

0 5 10 15 20

SCALE 1 : 250 DISTANCES ARE METRIC



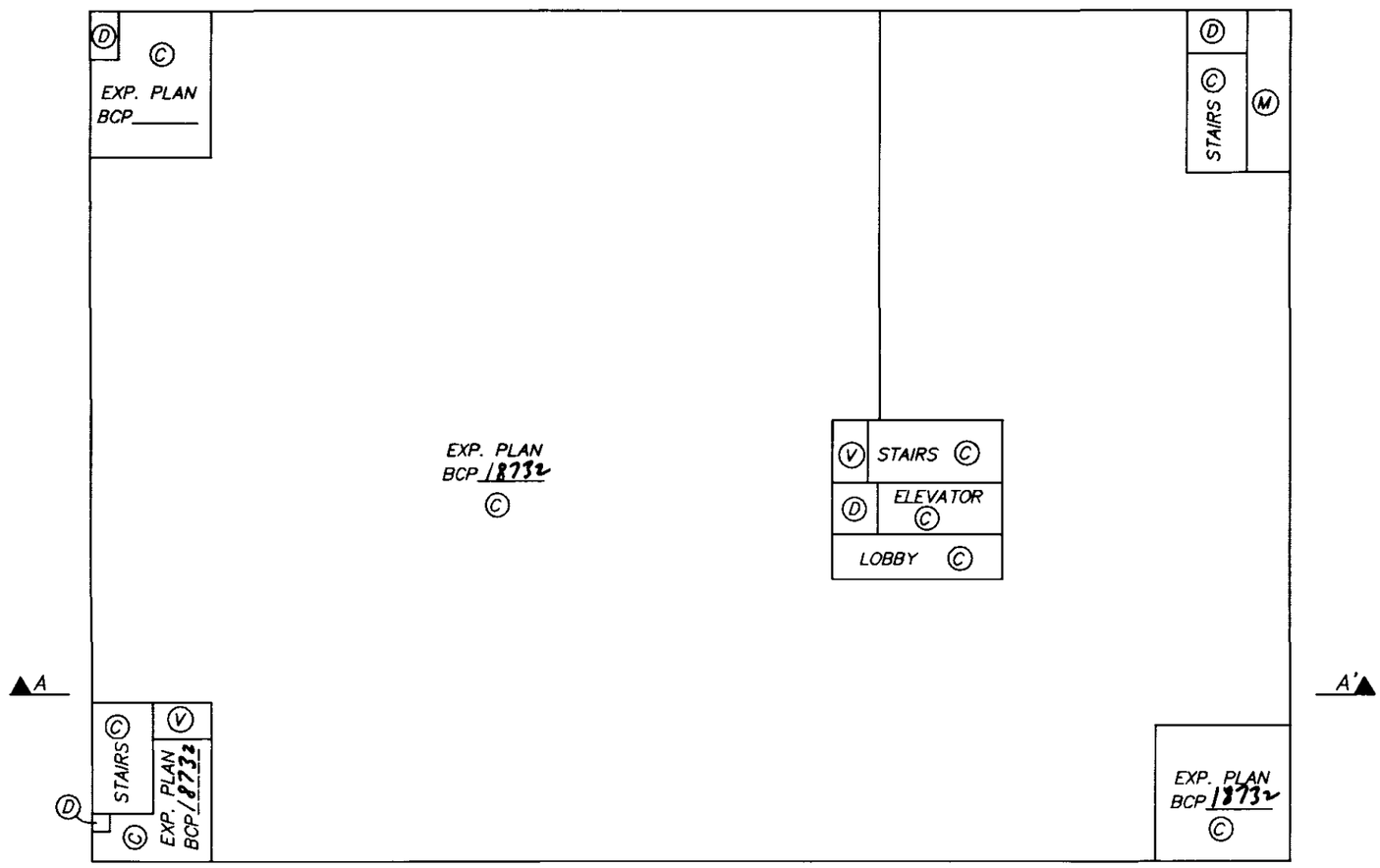

PARKING LEVEL P3

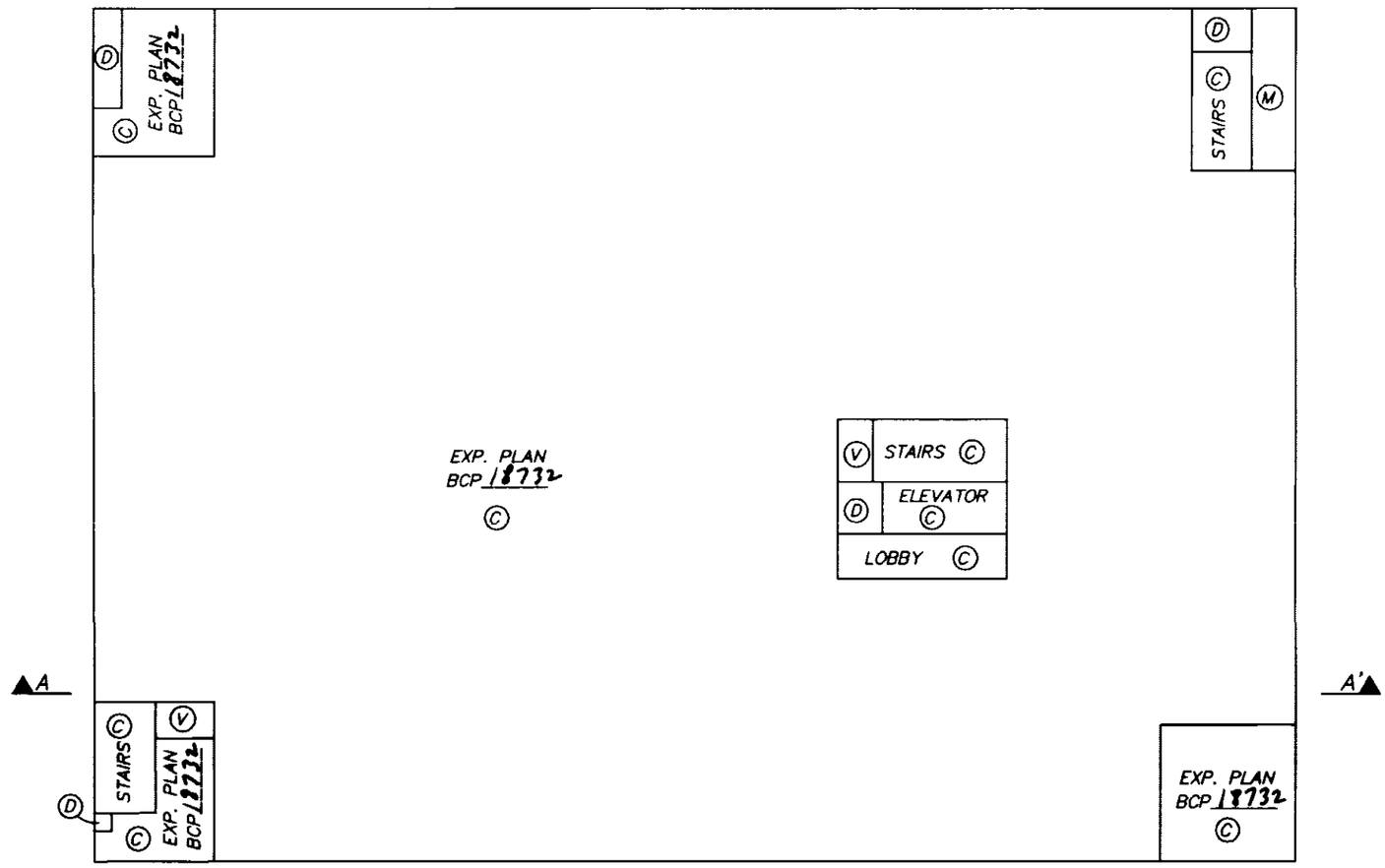

PARKING LEVEL P2

JUNE 20, 2005
DWG: 2742-S12

ORIGINAL

FILED VABCS1399 R37763 2005-08-29-11.34.51.356590

FLOOR PLANS

STRATA PLAN BCS /399

0 5 10 15 20

SCALE 1 : 250 DISTANCES ARE METRIC



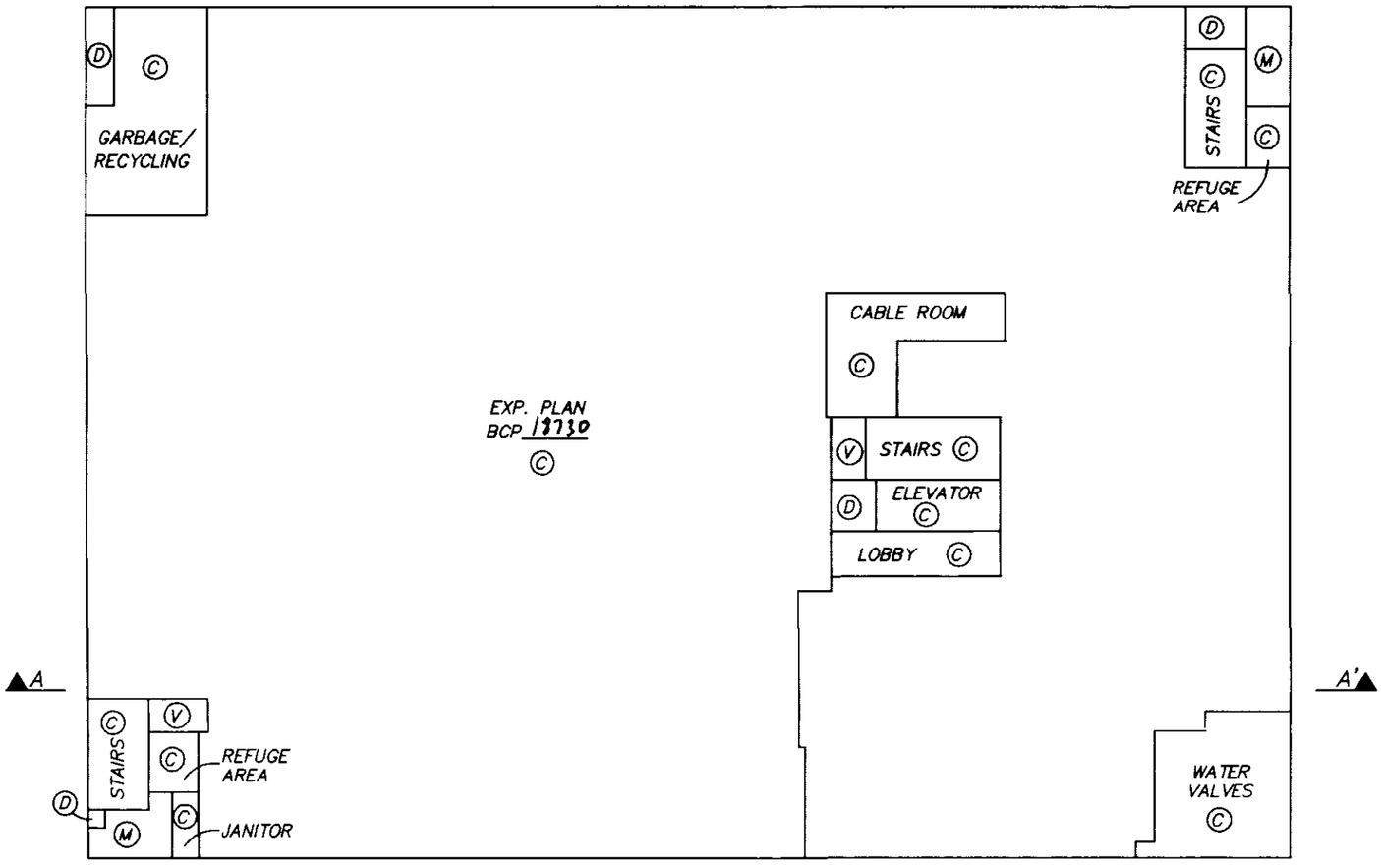

PARKING LEVEL P1

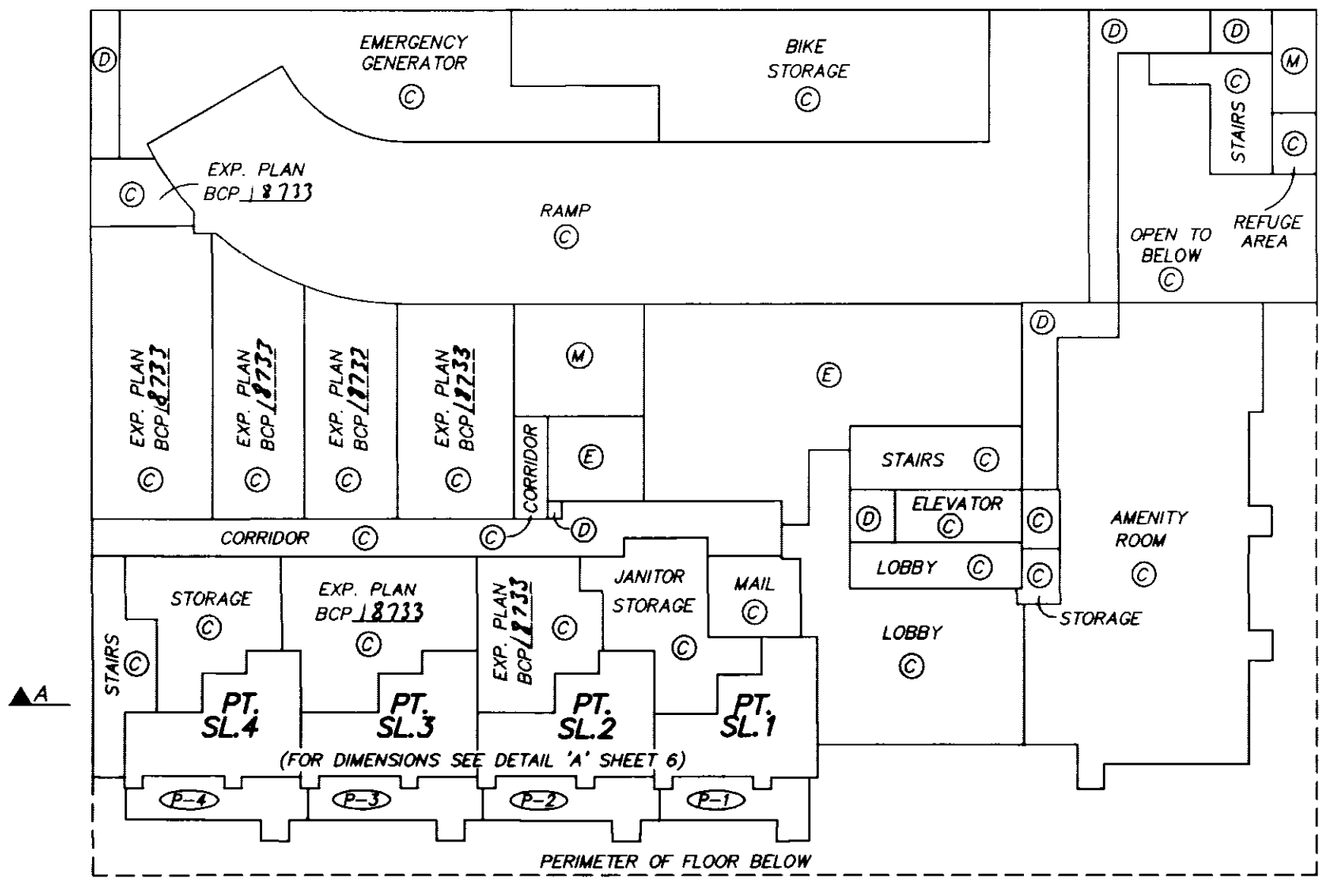

LEVEL 1

JUNE 20, 2005
DWG: 2742-S12

ORIGINAL

FILED VABCS1399 R37763 2005-08-29-11.34.51.356590

FILED VABCS1399 R37763 2005-08-29-11.34.51.356590

FLOOR PLANS

STRATA PLAN BCS 1399

0 5 10 15

SCALE 1:200 DISTANCES ARE IN METRES

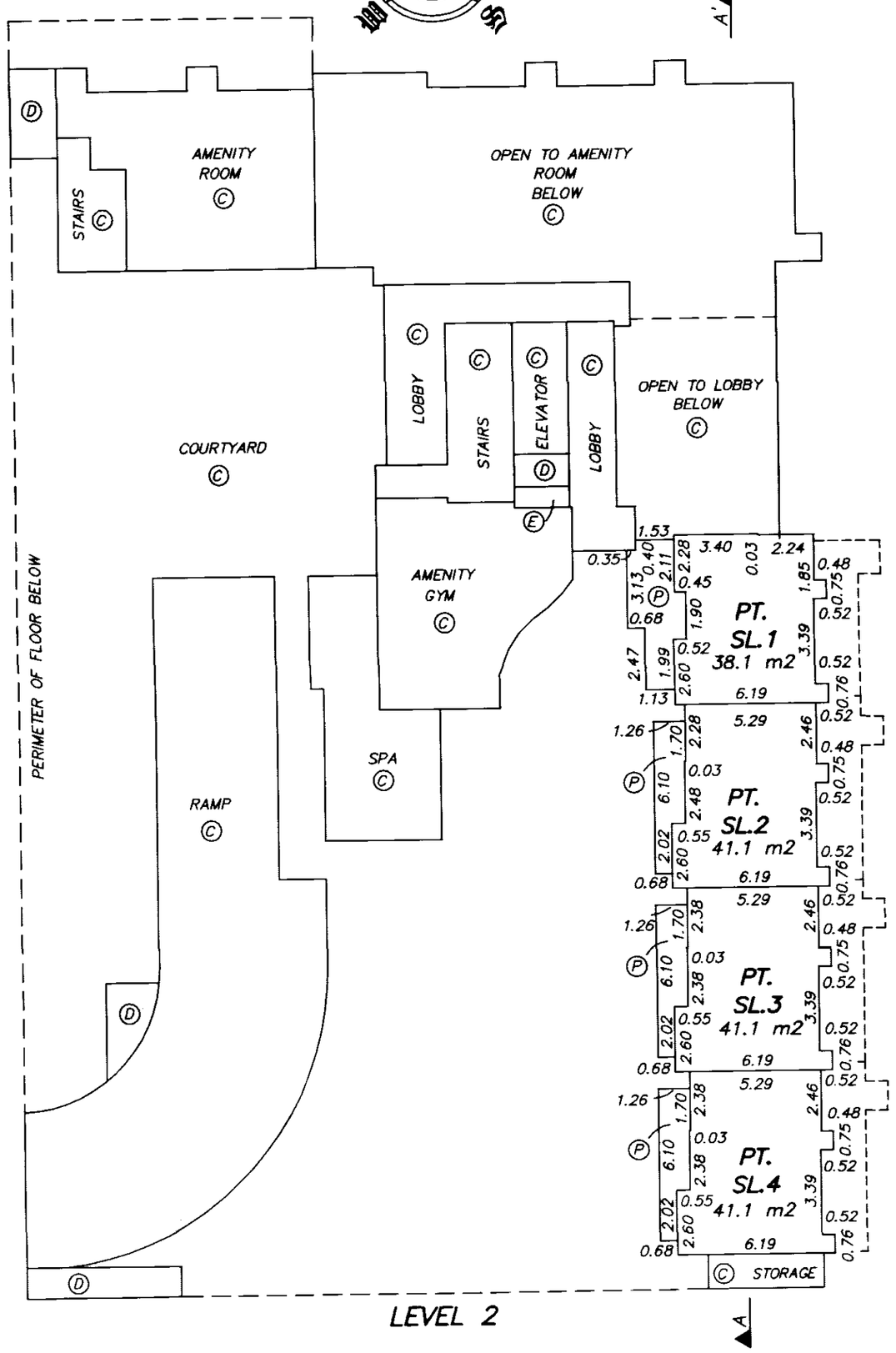

LEVEL 2

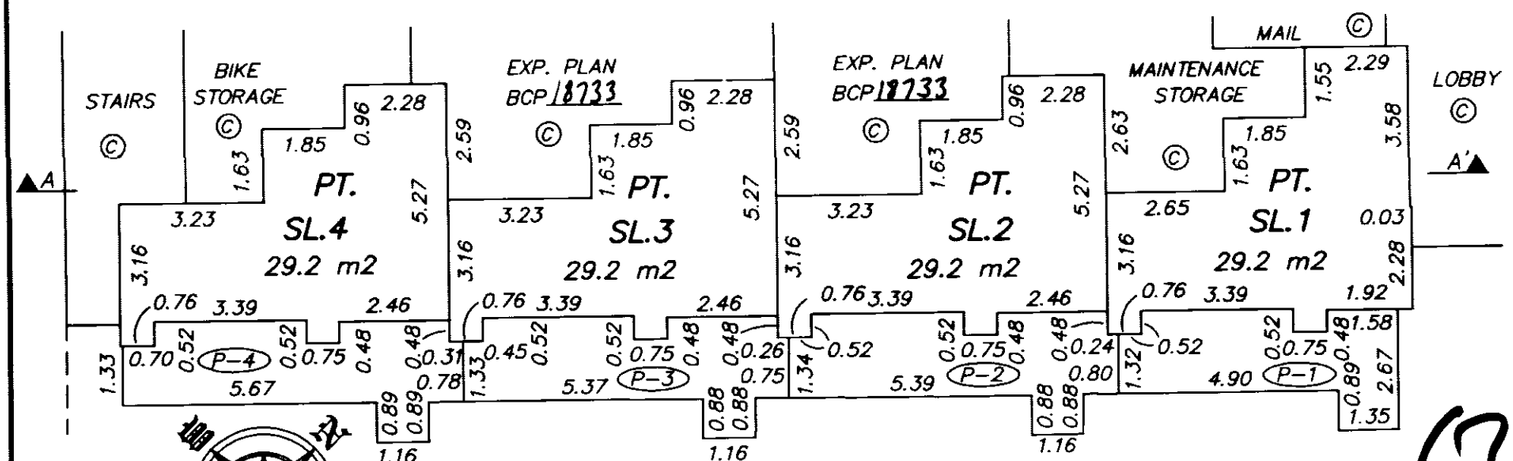

DETAIL 'A' LEVEL 1

0 5 10

SCALE 1:150 DISTANCES ARE IN METRES

JUNE 20, 2005
DWG: 2742-S12

ORIGINAL

FLOOR PLAN
LEVEL 3

0 5 10 15

SCALE 1:200 DISTANCES ARE IN METRES

STRATA PLAN BCS 1399

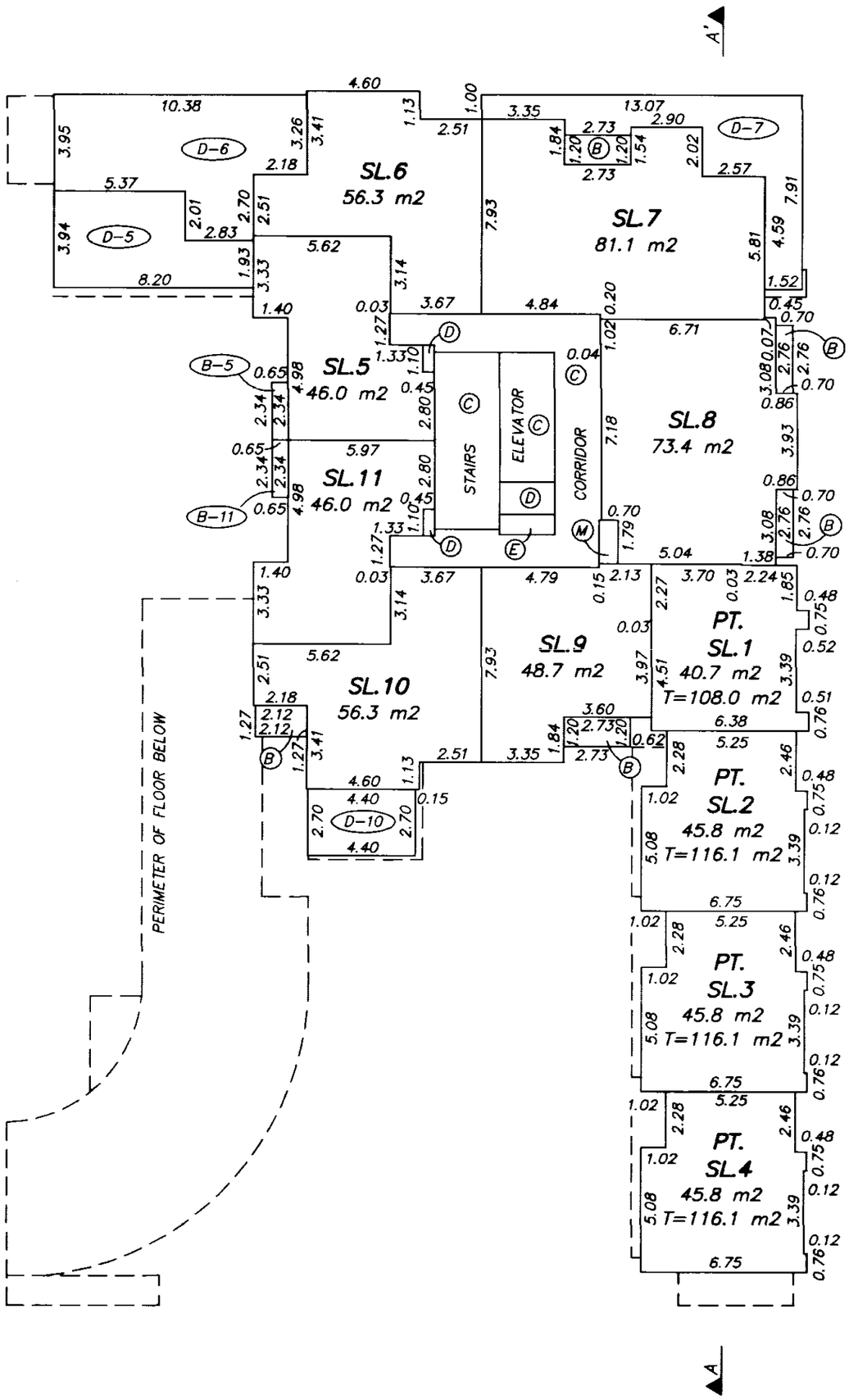

JUNE 20, 2005
DWG: 2742-S12

ORIGINAL

FILED VABCS1399 R37763 2005-08-29-11.34.51.356590

FLOOR PLANS

STRATA PLAN BCS /399

0 5 10 15

SCALE 1:200 DISTANCES ARE IN METRES

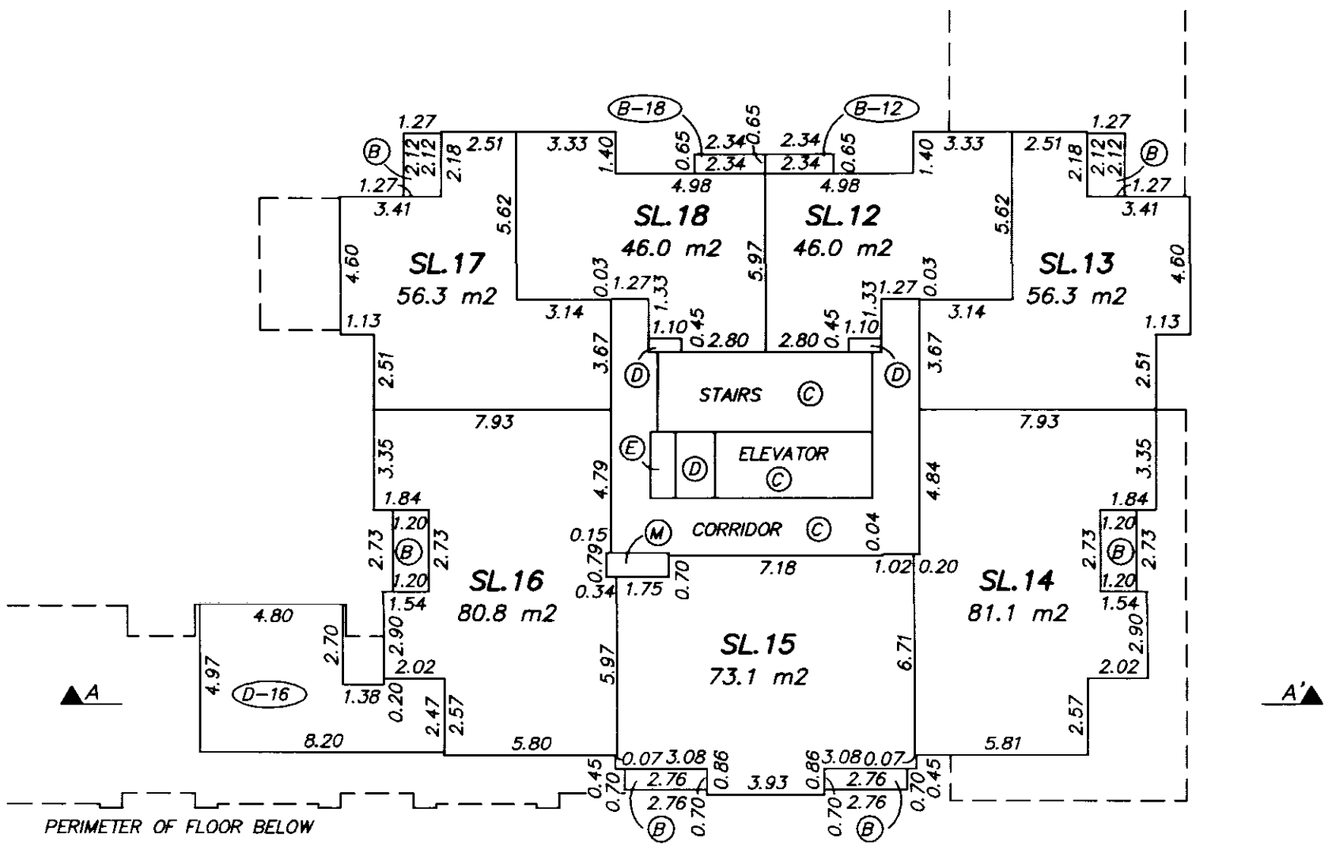

LEVEL 4

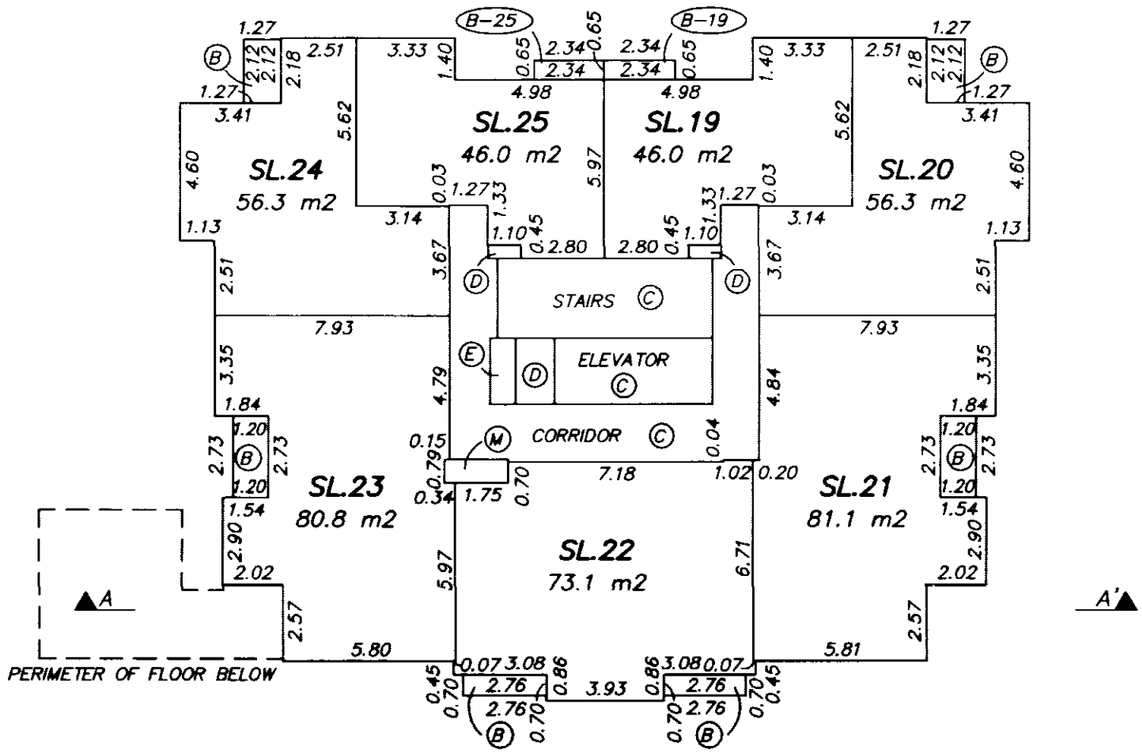

LEVEL 5

JUNE 20, 2005
DWG: 2742-S12

ORIGINAL

FILED VABCS1399 R37763 2005-08-29-11.34.51.356590

FLOOR PLANS

STRATA PLAN BCS /399

0 5 10 15

SCALE 1:200 DISTANCES ARE IN METRES

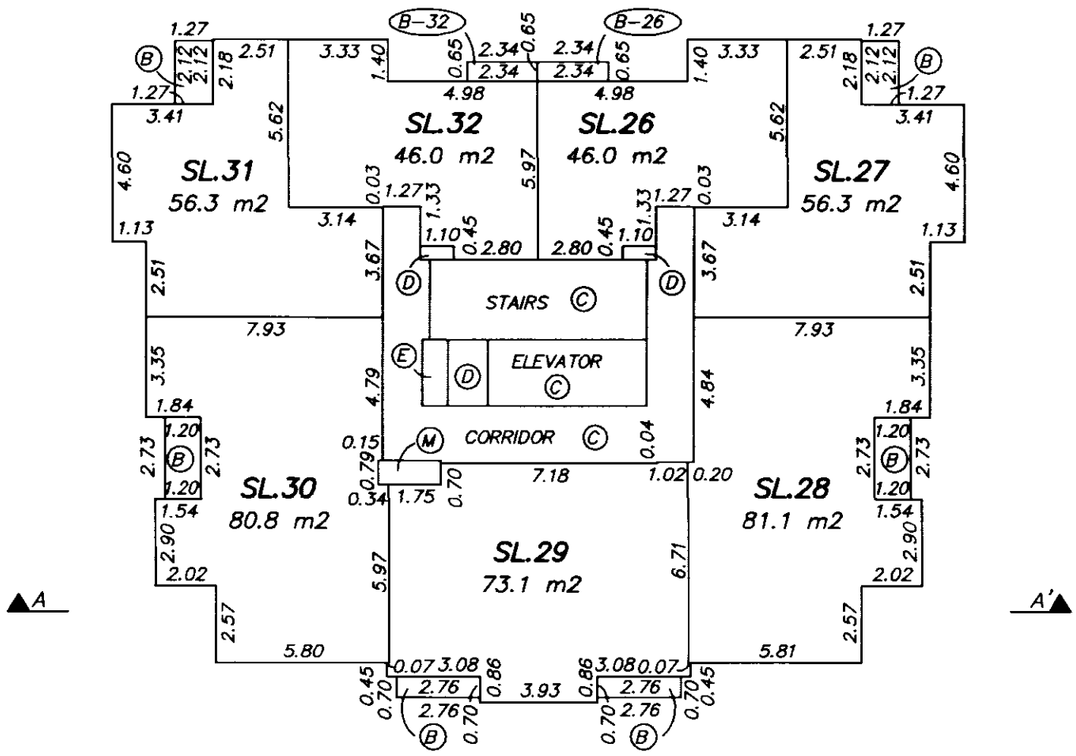

LEVEL 6

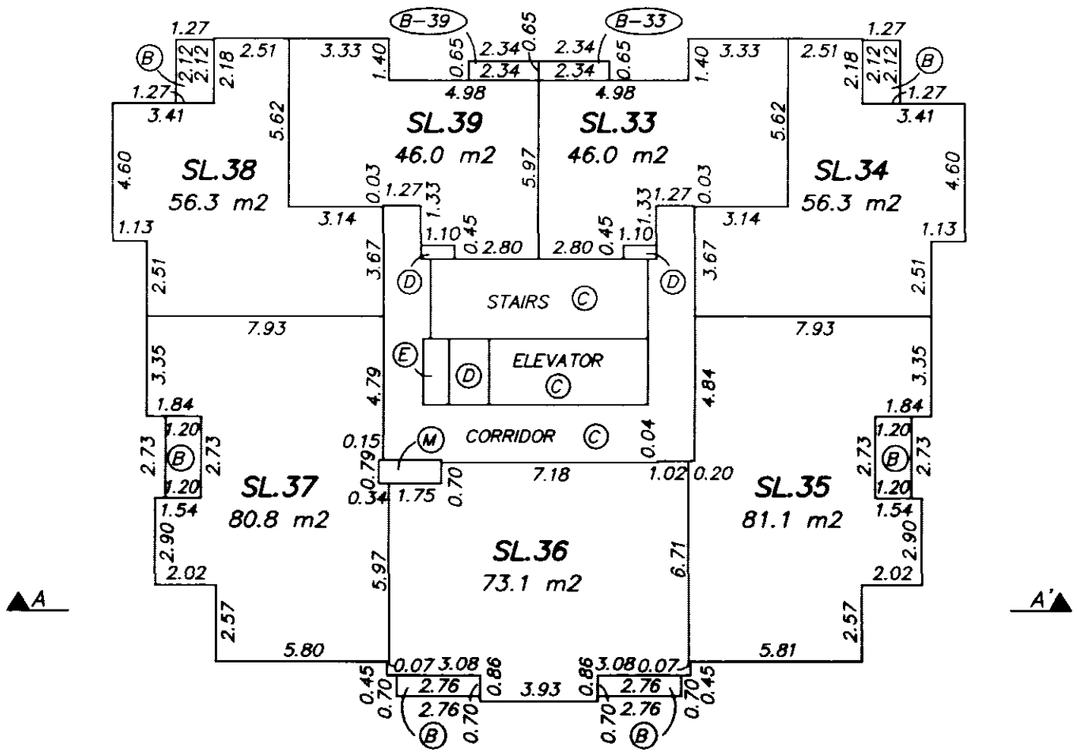

LEVEL 7

JUNE 20, 2005
DWG: 2742-S12

ORIGINAL

FILED VABCS1399 R37763 2005-08-29-11.34.51.356590

FLOOR PLANS

STRATA PLAN BCS 1399

0 5 10 15

SCALE 1:200 DISTANCES ARE IN METRES

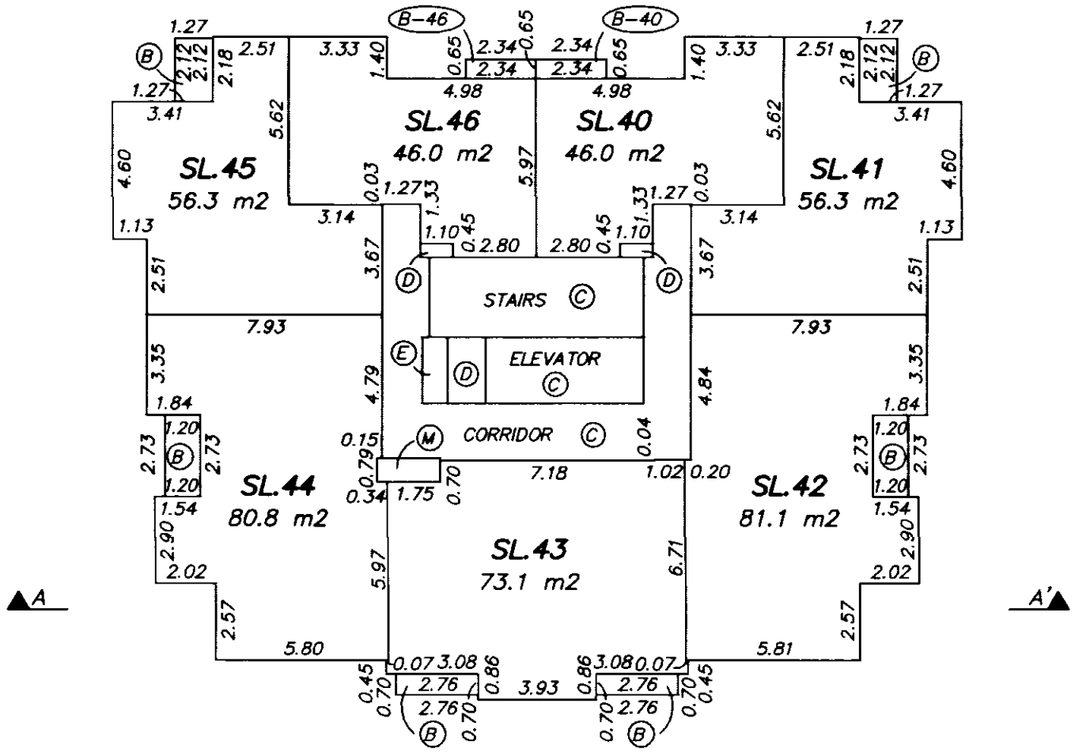

LEVEL 8

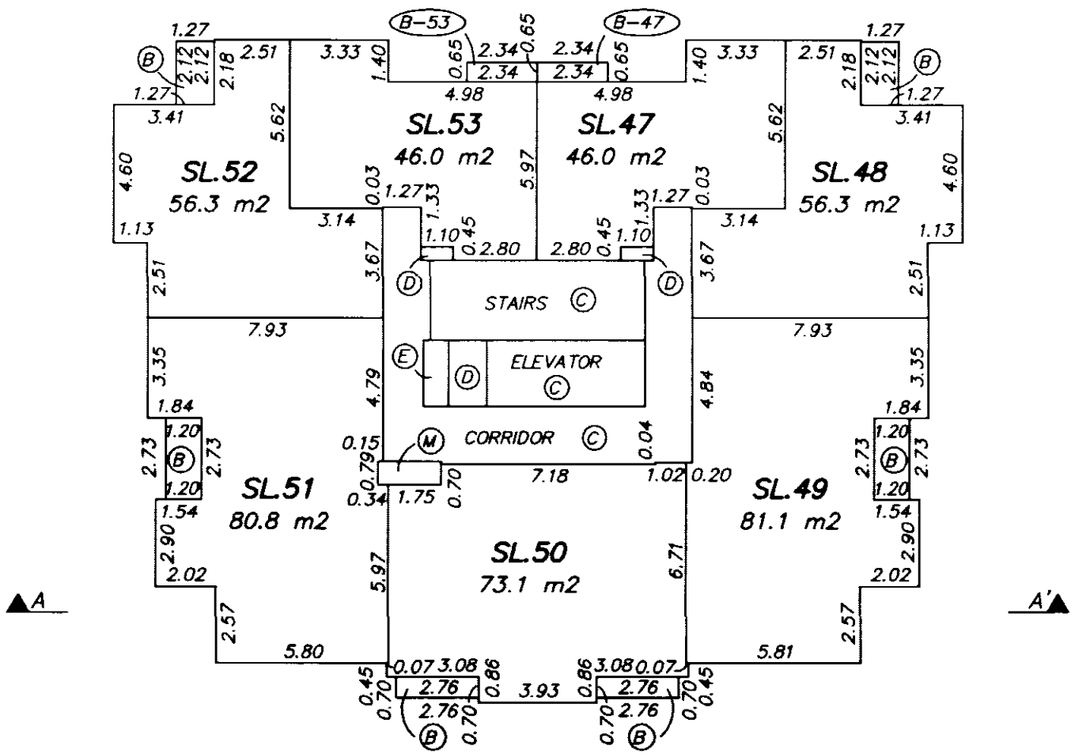

LEVEL 9

JUNE 20, 2005
DWG: 2742-S12

ORIGINAL

FILED VABCS1399 R37763 2005-08-29-11.34.51.356590

FLOOR PLANS

STRATA PLAN BCS /399

0 5 10 15

SCALE 1:200 DISTANCES ARE IN METRES



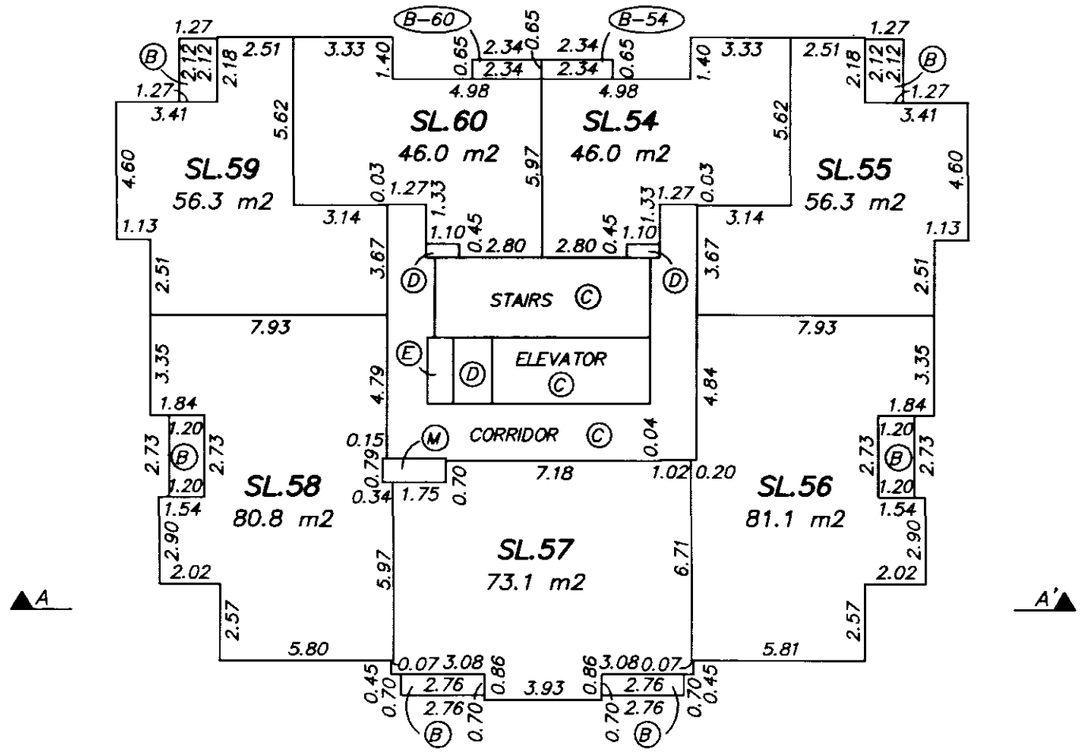

LEVEL 10

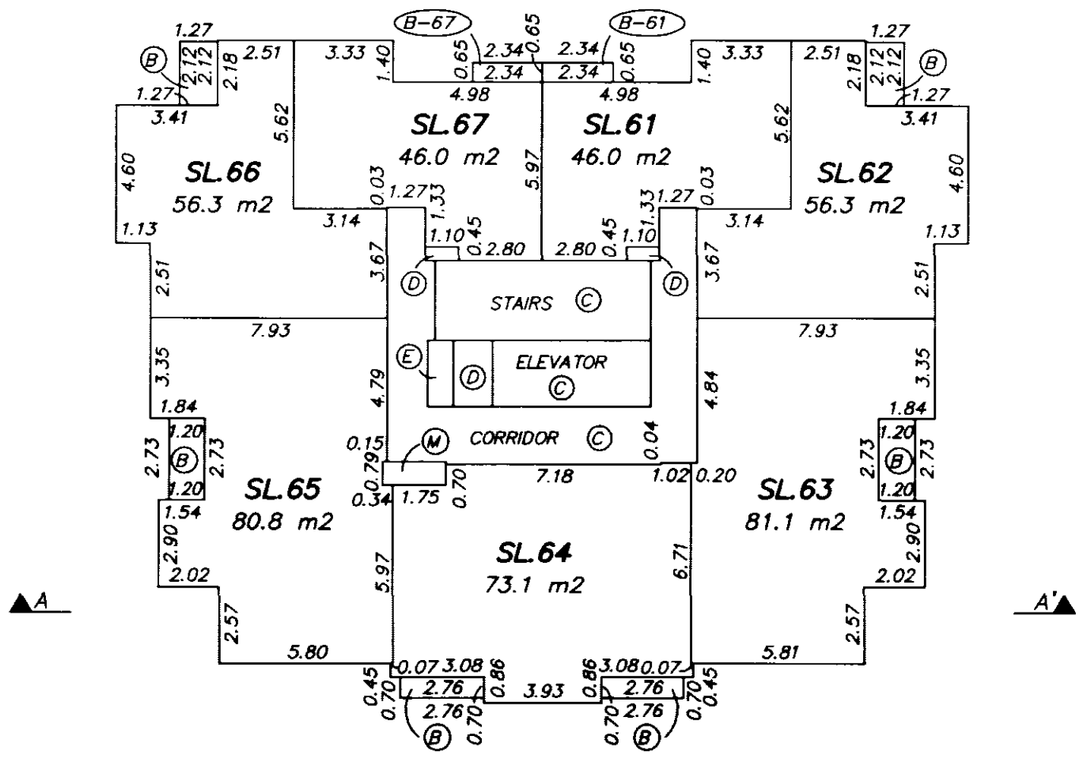

LEVEL 11

JUNE 20, 2005
DWG: 2742-S12

ORIGINAL

FILED VABCS1399 R37763 2005-08-29-11.34.51.356590

FLOOR PLANS

STRATA PLAN BCS /399

0 5 10 15

SCALE 1:200 DISTANCES ARE IN METRES

NOTE:
LEVEL 13 HAS BEEN ELIMINATED FROM CONSECUTIVE FLOOR NUMBERING

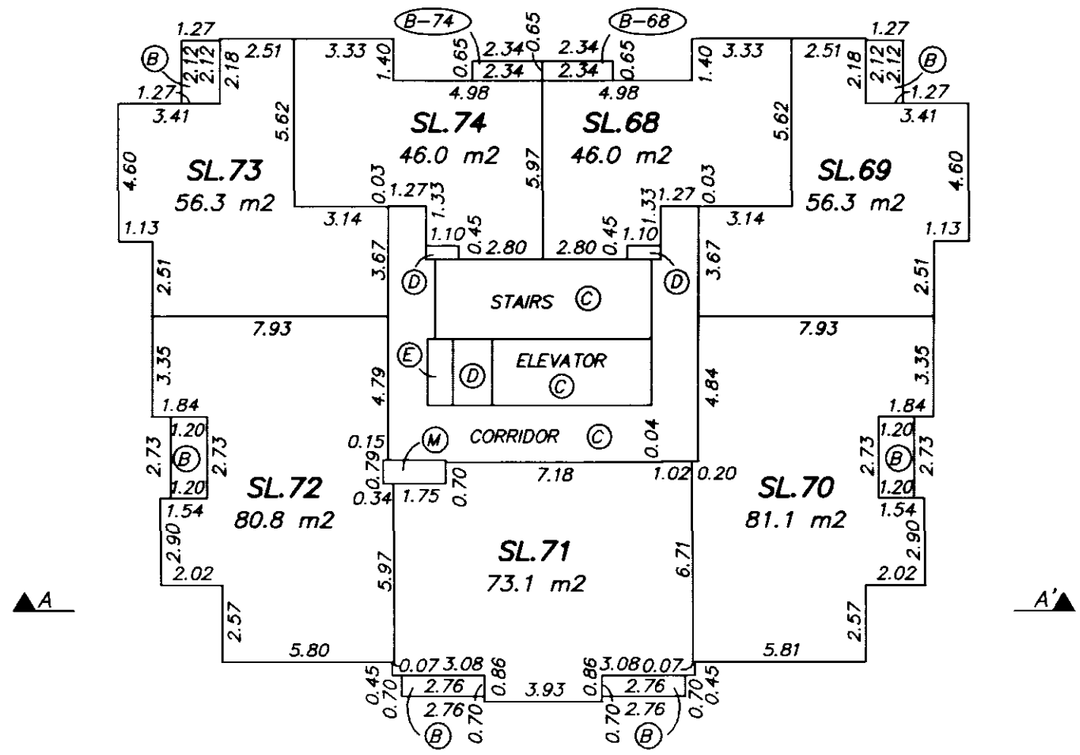

LEVEL 12

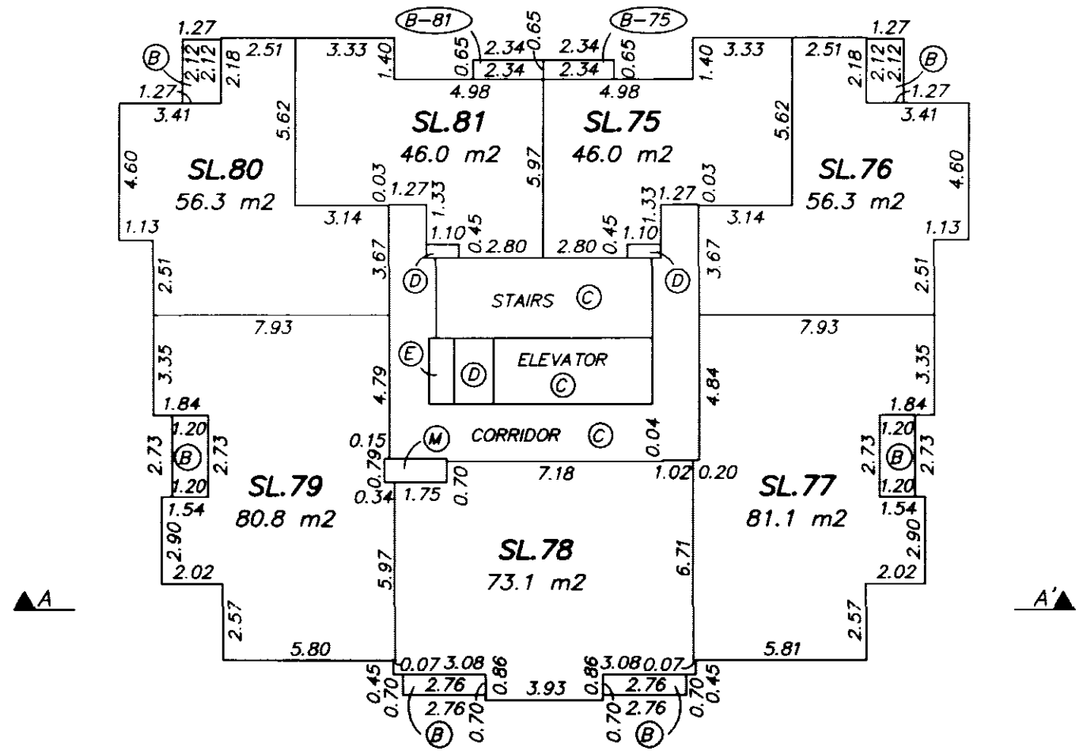

LEVEL 14

JUNE 20, 2005
DWG: 2742-S12

ORIGINAL

FILED VABCS1399 R37763 2005-08-29-11.34.51.356590

FLOOR PLANS

STRATA PLAN BCS 1399

0 5 10 15

SCALE 1:200 DISTANCES ARE IN METRES



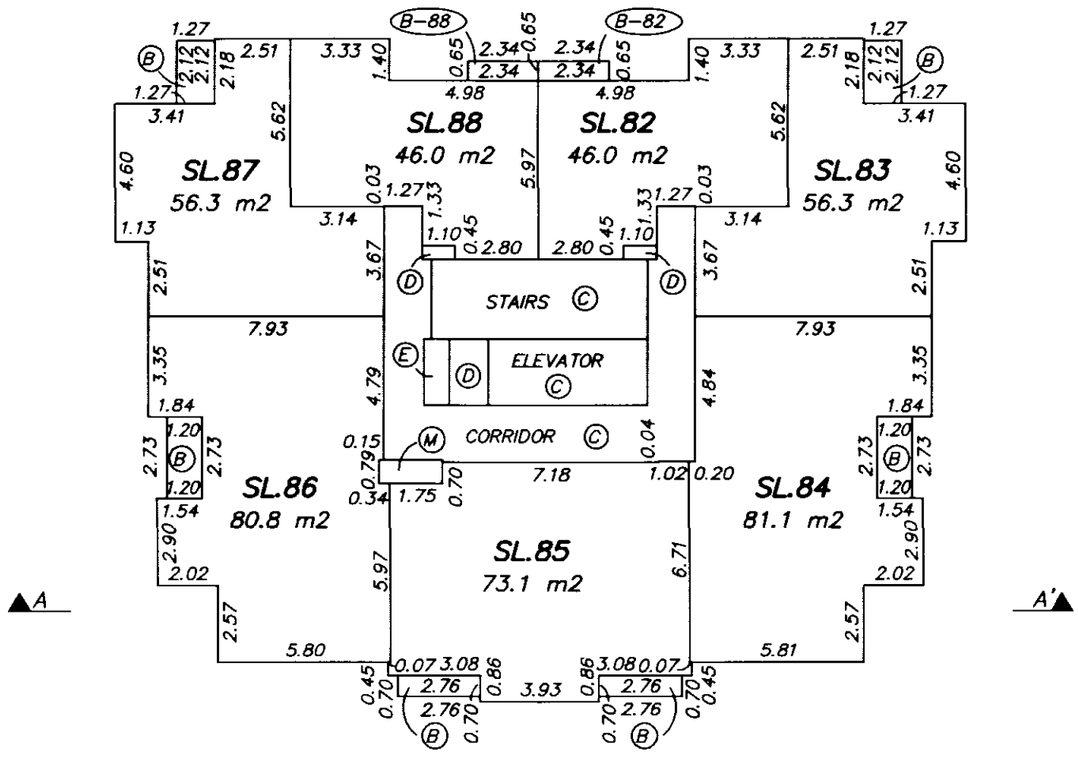

LEVEL 15

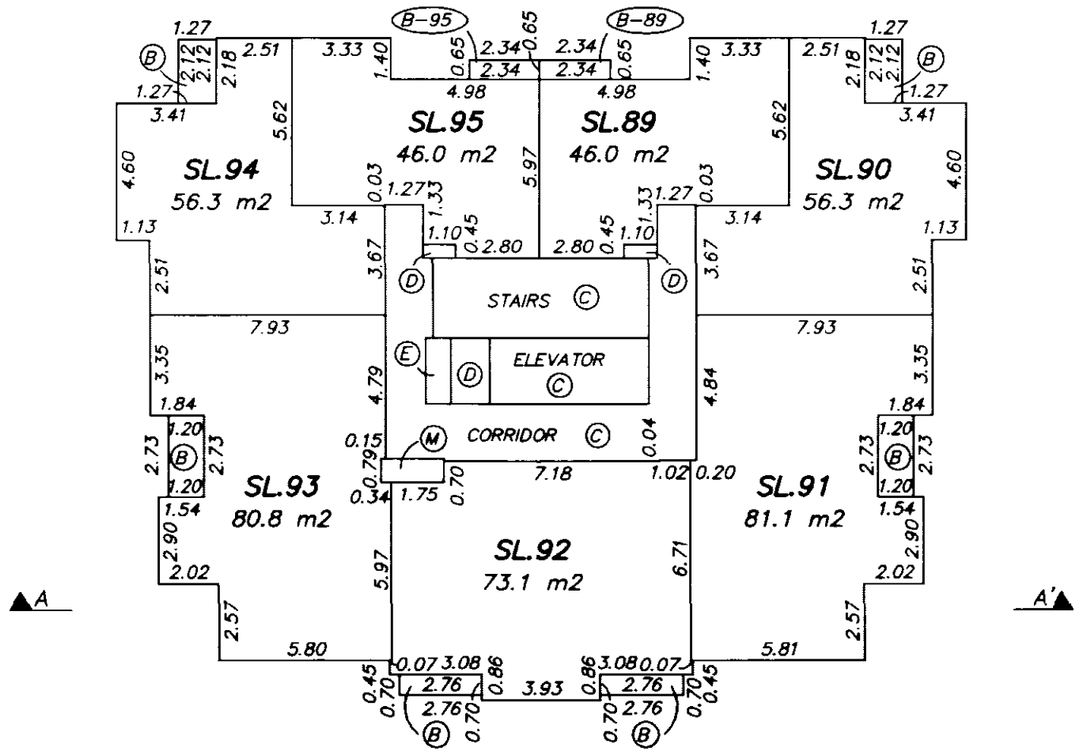

LEVEL 16

JUNE 20, 2005
DWG: 2742-S12

ORIGINAL

FILED VABCS1399 R37763 2005-08-29-11.34.51.356590

FLOOR PLANS

STRATA PLAN BCS /399

0 5 10 15

SCALE 1:200 DISTANCES ARE IN METRES

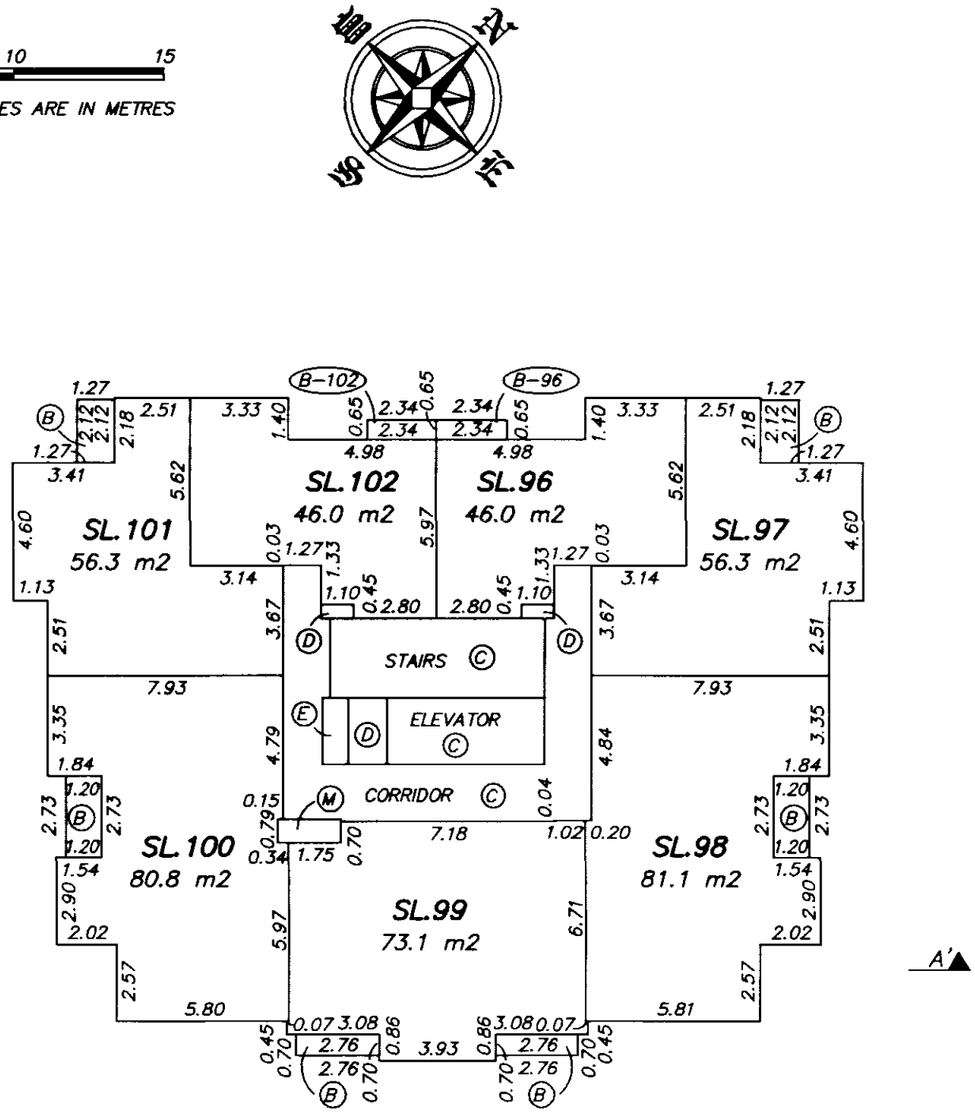

LEVEL 17

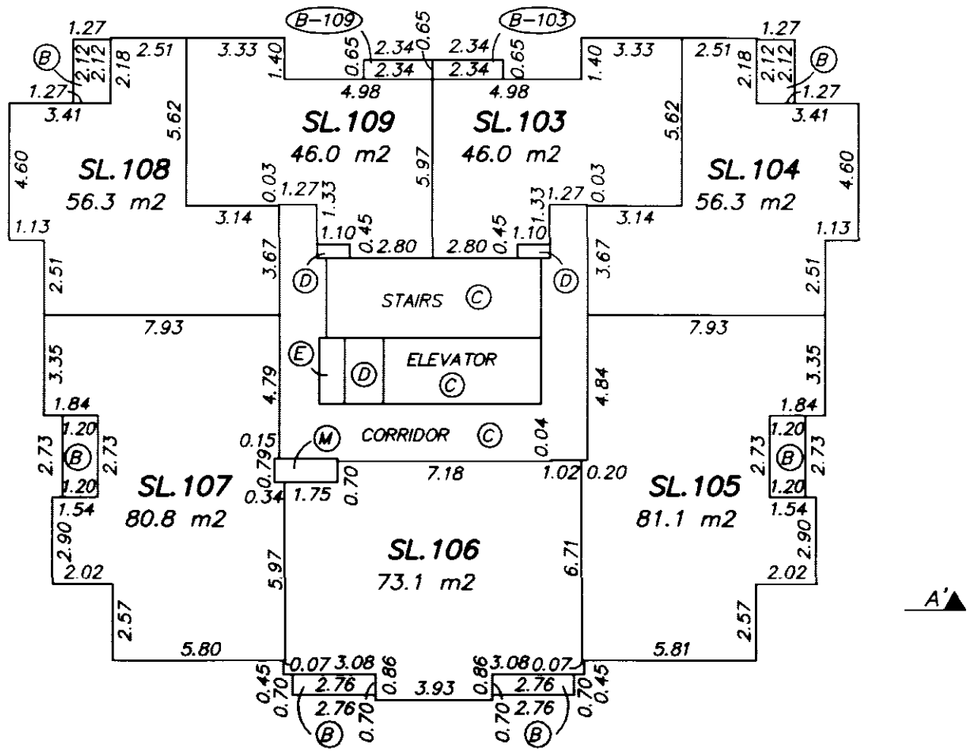

LEVEL 18

JUNE 20, 2005
DWG: 2742-S12

ORIGINAL

FILED VABCS1399 R37763 2005-08-29-11.34.51.356590

FLOOR PLANS

STRATA PLAN BCS /399

0 5 10 15

SCALE 1:200 DISTANCES ARE IN METRES



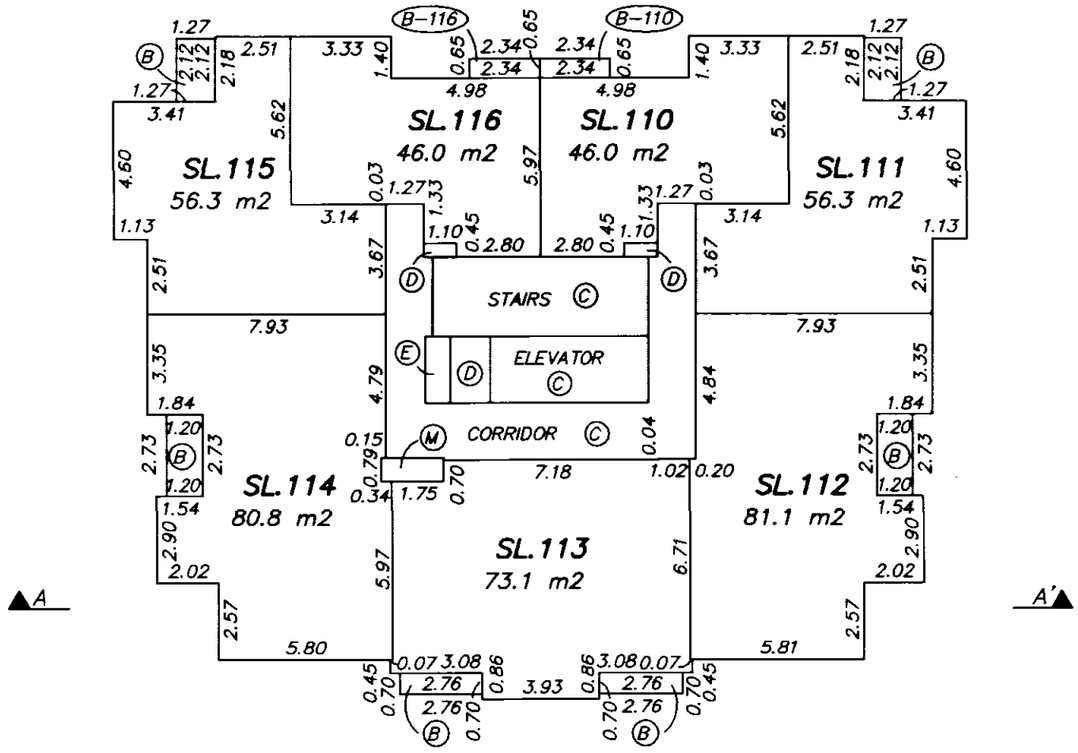

LEVEL 19

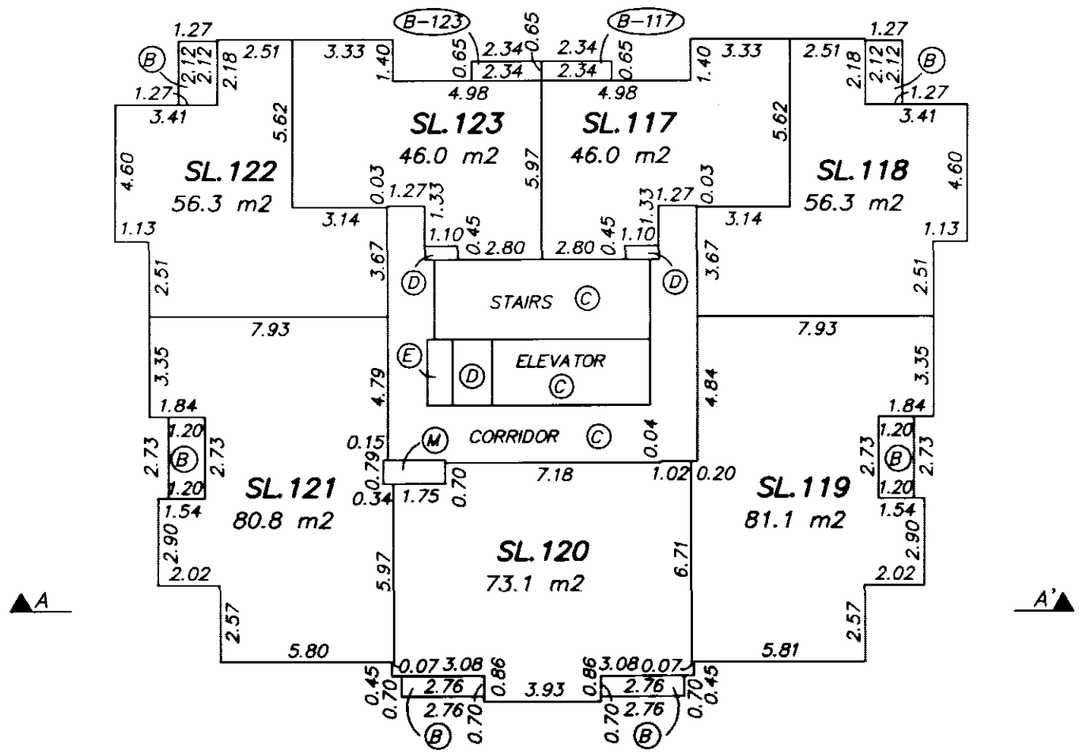

LEVEL 20

JUNE 20, 2005
DWG: 2742–S12

ORIGINAL

FILED VABCS1399 R37763 2005-08-29-11.34.51.356590

FLOOR PLANS

STRATA PLAN BCS /399

0 5 10 15

SCALE 1:200 DISTANCES ARE IN METRES

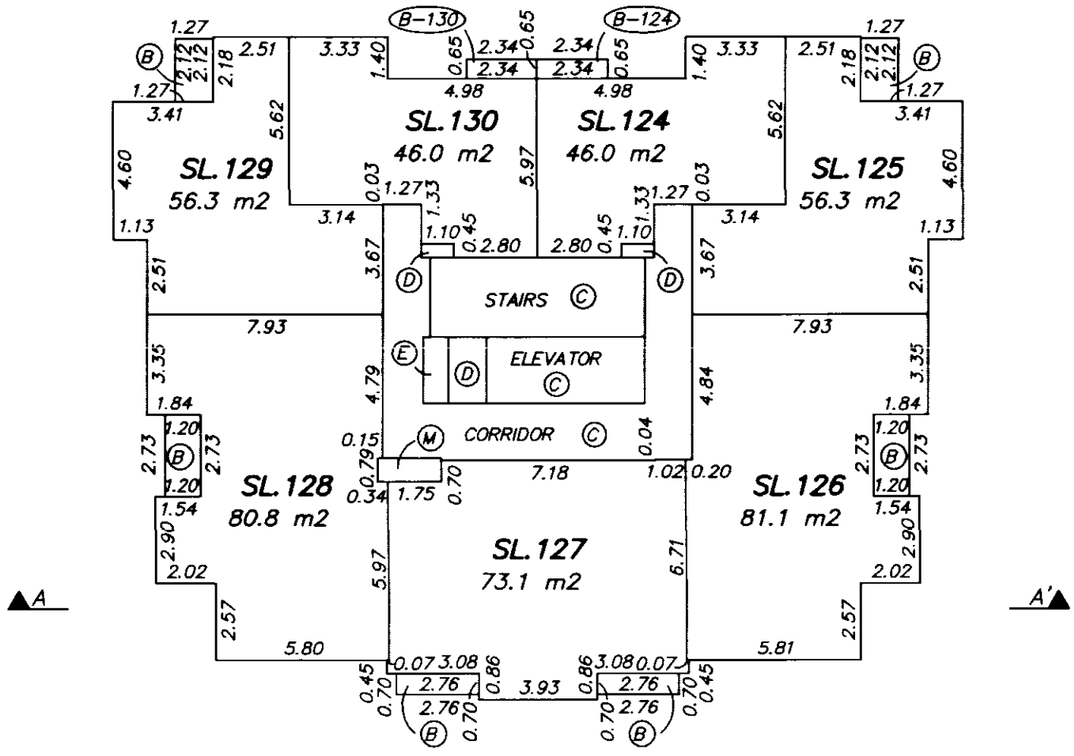

LEVEL 21

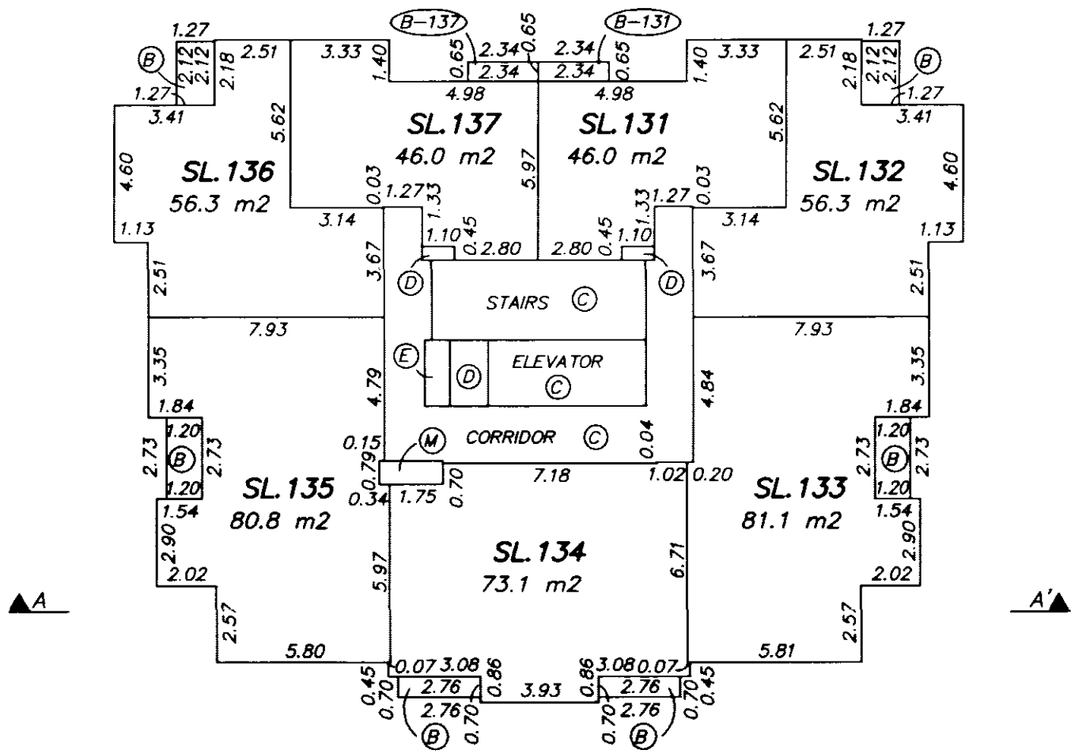

LEVEL 22

JUNE 20, 2005
DWG: 2742-S12

ORIGINAL

FILED VABCS1399 R37763 2005-08-29-11.34.51.356590

FLOOR PLANS

STRATA PLAN BCS /399

0 5 10 15

SCALE 1:200 DISTANCES ARE IN METRES



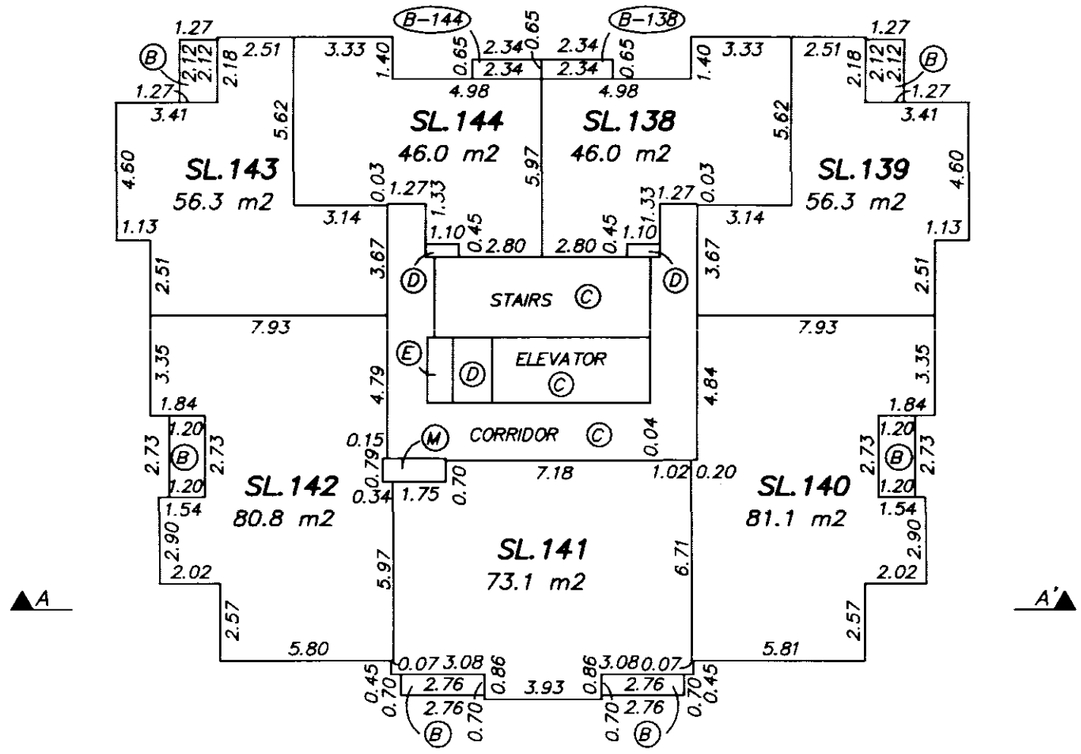

LEVEL 23

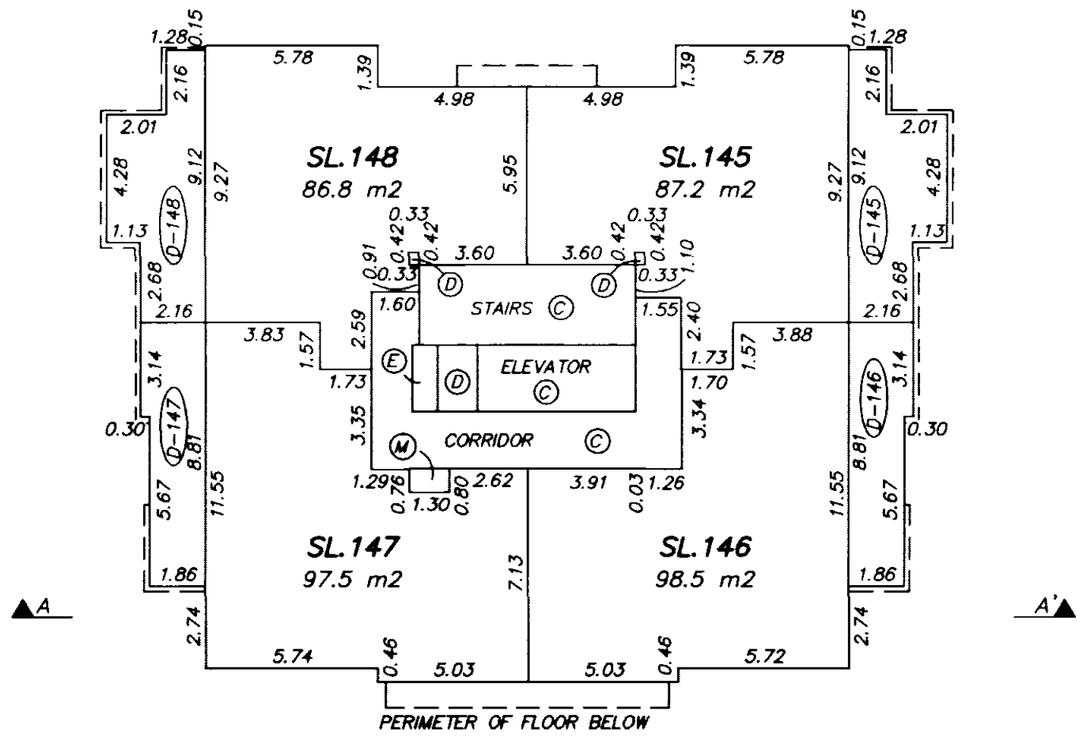

LEVEL 24

JUNE 20, 2005
DWG: 2742-S12

ORIGINAL

FILED VABCS1399 R37763 2005-08-29-11.34.51.356590

FLOOR PLANS

STRATA PLAN BCS 1399

0 5 10 15

SCALE 1:200 DISTANCES ARE IN METRES



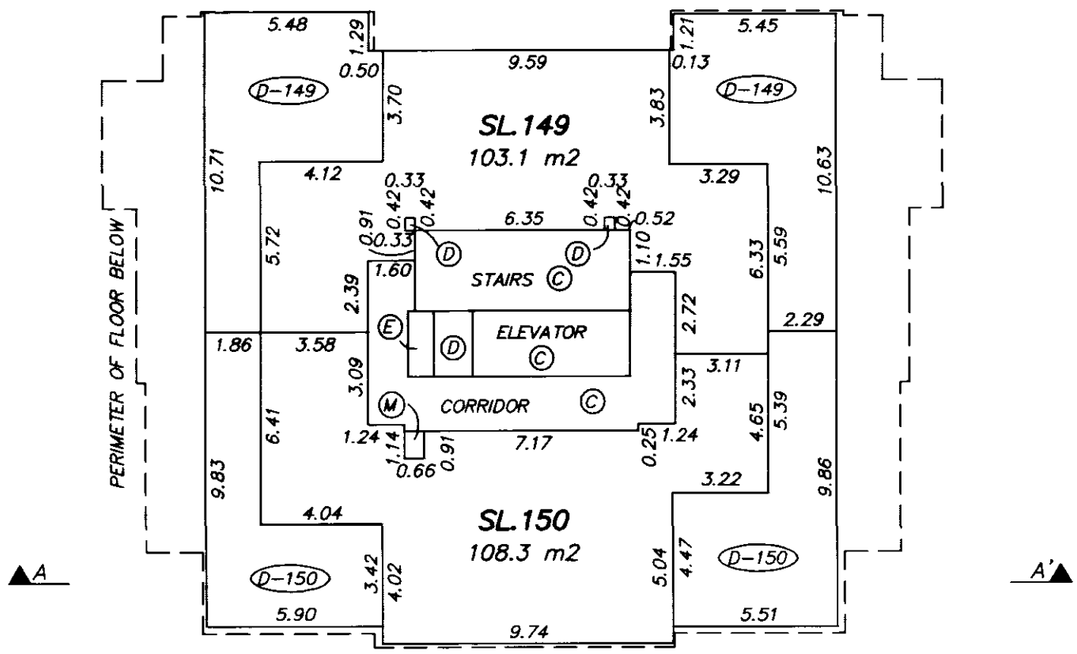

LEVEL 25

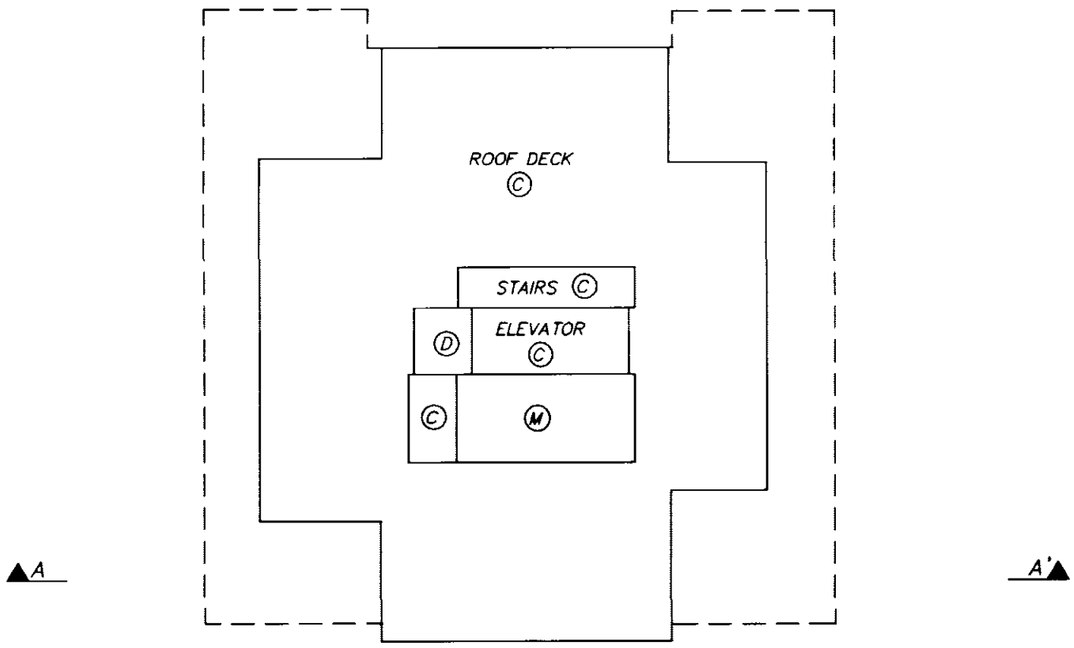

LEVEL 26

JUNE 20, 2005
DWG: 2742-S12

ORIGINAL

FILED VABCS1399 R37763 2005-08-29-11.34.51.356590

SECTION A–A'

0 5 10 15 20

SCALE 1 : 250 DISTANCES ARE METRIC

NOTE:
LEVEL 13 HAS BEEN ELIMINATED FROM CONSECUTIVE FLOOR NUMBERING

STRATA PLAN BCS /399

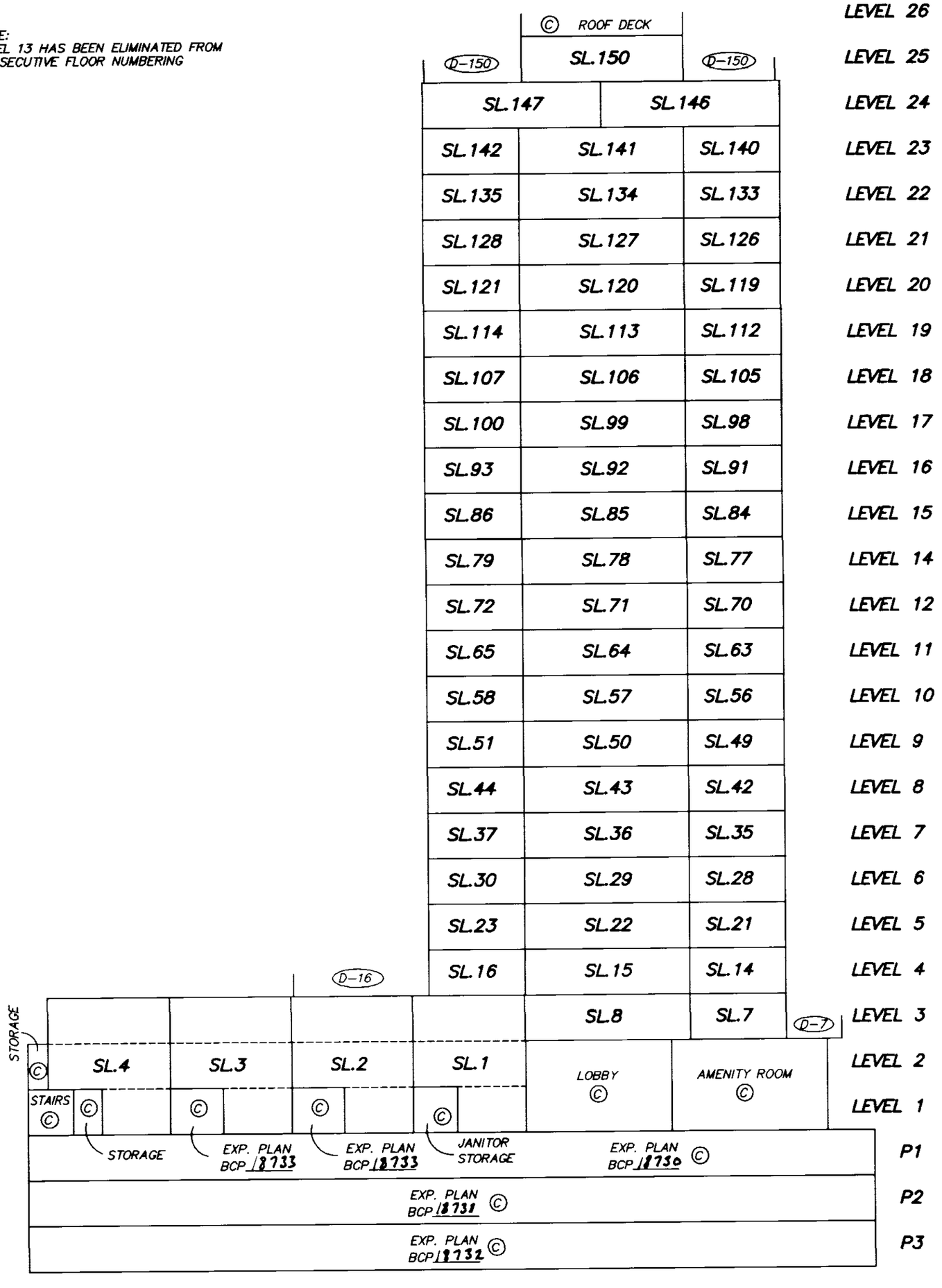

JUNE 20, 2005
DWG: 2742–S12

ORIGINAL

FILED VABCS1399 R37763 2005-08-29-11.34.51.356590