

BC OnLine Land Title Internet Service
Provided in co-operation with
Land Title and Survey Authority

LAND TITLE AND SURVEY AUTHORITY - DOCUMENT RETRIEVAL WEB REQUEST

CLIENT NAME: RE/MAX REAL ESTATE SERVICES AS
ADDRESS: REALTY LTD.
410-650 WEST 41ST AVE NORTH OFFICE TOWER
VANCOUVER BC V5Z 2M9

PICK-UP INSTRUCTIONS:

USER ID: PA74746 APPLICATION NO.: LMS2446 LM PAGES: 017
ACCOUNT NO.: 199822 REQUESTED AT: 05-07-26 10:20
REFERENCE NO.: R05869 FOLIO NO.:

REMARKS:

BC OnLine Land Title Fax Service

Help Desk Victoria ..... (250) 953-8200
In B.C. 1-800-663-6102
Administration Office ... (250) 953-8250
Fax Number ..... (250) 953-8222

Persons who need to rely on a plan for legal purposes must examine the official version at the Land Title Office in which the plan is deposited.

The bylaw and common property sheets attached to strata plans have been repealed. Information regarding the bylaws and/or dealings affecting the common property of strata plans must be obtained from the general index and/or common property index on ALTOS. Refer to the BC OnLine user guide for access information.

FIRST SHEET SHEET 1 OF 50 SHEETS.

STRATA PLAN
LMS 2446

STRATA PLAN OF
LOT B, BLOCK 104, D.L. 541, GROUP 1, N.W.D., PLAN LMP 21594

CITY OF VANCOUVER

SCALE : 1 : 500
ALL DISTANCES SHOWN ARE IN METRES

10 5 0 10 20

THE ADDRESS FOR THE SERVICE OF DOCUMENTS ON THE 'STRATA CORPORATION' IS:
'THE OWNERS, STRATA PLAN No. LMS 2446'
c/o VANCOUVER SOUTH INVESTMENTS LTD.
#2001 - 1188 W. GEORGIA ST.
VANCOUVER, B.C.
V6E 4A2

STRATA PLAN LMS 2446 DEPOSITED AND REGISTERED IN THE LAND TITLE OFFICE AT NEW WESTMINSTER, B.C. THIS 18 DAY OF JUNE, 1996

Dorsey REGISTRAR

CIVIC ADDRESS IS:
1238 SEYMOUR STREET,
VANCOUVER, B.C.

BK189706

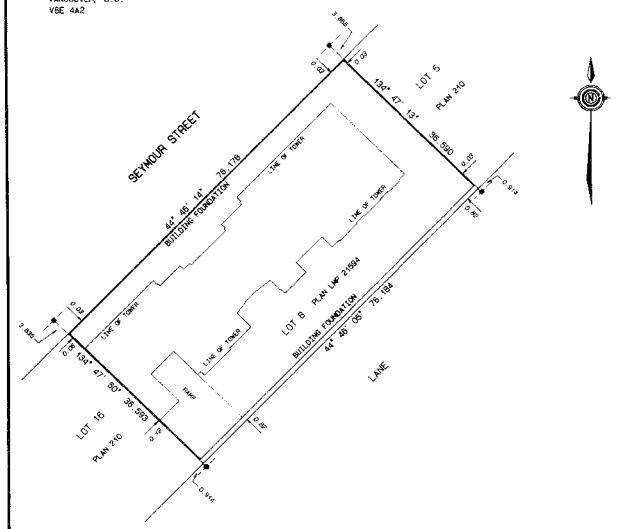

LEGEND
BEARINGS ARE GRID AND ARE DERIVED FROM PLAN LMP 21594.

ELEV	DENOTES ELEVATOR
SL	DENOTES STRATA LOT
C	DENOTES COMMON PROPERTY
A	DENOTES AREA
LCP	DENOTES LIMITED COMMON PROPERTY
PT	DENOTES PART
BAL	DENOTES BALCONY
m2	DENOTES SQUARE METRES
●	DENOTES OLD IRON POST FOUND
■	DENOTES OLD LEAD PLUG FOUND

I, B.J. OKE, OF VANCOUVER, B.C. BRITISH COLUMBIA LAND SURVEYOR, HEREBY CERTIFY THAT THE BUILDING ERECTED ON THE PARCEL DESCRIBED ABOVE IS WHOLLY WITHIN THE EXTERNAL BOUNDARIES OF THAT PARCEL. DATED AT VANCOUVER ON THIS 1st DAY OF JUNE, 1996.

B.J.O.
B.C.L.S.

'THIS PLAN LIES WITHIN THE GREATER VANCOUVER REGIONAL DISTRICT'

HERMON, BUNBURY, AND OKE.
CANADA and B.C. LAND SURVEYORS
Vancouver and Whistler, B.C.
J-95234 F.B. NOTES IN JOB FILE
\95234\95234.FIR

S-9136

09•200

SECOND SHEET-SHEET 2 OF 50 SHEETS.

STRATA PLAN
LMS 2446

CONDOMINIUM ACT

LOT NO.	SHEET NO.	FORM 1 SCHEDULE OF UNIT ENTITLEMENT	FORM 2 SCHEDULE OF INTEREST UPON DESTRUCTION	FORM 3 SCHEDULE OF VOTING RIGHTS
			AND 7	
		SEE SHEETS 3, 4, 5, 6.		

STATUTORY DECLARATION

I/WE THE UNDERSIGNED DO SOLEMLY DECLARE THAT: -
1. I/WE (AM/ARE) THE OWNER-DEVELOPER- OR THE DULY AUTHORIZED AGENT OF THE OWNER-DEVELOPER
2. THE STRATA PLAN IS FOR RESIDENTIAL USE.
3. I/WE MAKE THIS SOLEMN DECLARATION CONSCIENTIOUSLY BELIEVING IT TO BE TRUE AND KNOWING THAT IT IS OF THE SAME FORCE AND EFFECT AS IF MADE UNDER OATH.

BRAD R. HOLME

DECLARED BEFORE ME AT VANCOUVER IN THE PROVINCE OF BRITISH COLUMBIA THIS 6th DAY OF JUNE A.D. 1996.

A NOTARY PUBLIC IN AND FOR THE PROVINCE OF BRITISH COLUMBIA RUSSELL BENSON

ACCEPTED AS TO FORMS 1, 2 & 3 ON THE 14 DAY OF June, 1996

SUPERINTENDENT OF REAL ESTATE

CERTIFICATE UNDER SECTION 8(1)

I B.J. OKE, A BRITISH COLUMBIA LAND SURVEYOR, HEREBY CERTIFY THAT THE BUILDING SHOWN IN THIS STRATA PLAN HAS NOT, AS OF THE 1st DAY OF JUNE, 1996 BEEN PREVIOUSLY OCCUPIED.

B.C.L.S.

MORTGAGEES	OWNER - DEVELOPER
477486 BRITISH COLUMBIA LTD.	VANCOUVER SOUTH INVESTMENTS LTD.
authorized signatory	BRAD HOLME authorized signatory
JOHN FERZANDI authorized signatory	JOHN FERZANDI authorized signatory
RUSSELL BENSON witness	RUSSELL BENSON witness
LAWYER occupation	LAWYER occupation
1300 - 777 DUNSMUIR ST. address	1300 - 777 DUNSMUIR ST. address
VANCOUVER, B.C. V7Y 1K2.	VANCOUVER, B.C. V7Y 1K2.
THE BANK OF NOVA SCOTIA	MORTGAGEE: METROPOLIS PROJECT DEVELOPMENT INC.
authorized signatory	Will Lin authorized signatory
MICHELE KWOK authorized signatory	witness
witness	Michelle Kwok witness NEI-UNRAI
SECRETARY JO SO CHEUNG occupation	CONTROLLER occupation
101-268 KEEFER ST. address	406-1040 HAMILTON ST. address
VANCOUVER, B.C., V6A 1X5	VAN, BC V6E 2R9

JUNE 1st, 1996

\95234\95234.SEC

S-9136

SECOND SHEET-SHEET 3 OF 50 SHEETS.

STRATA PLAN
LMS 2446

CONDOMINIUM ACT

STRATA LOT	SHEET NUMBER	FORM 1 SCHEDULE OF UNIT ENTITLEMENT	FORM 2 SCHEDULE OF INTEREST UPON DESTRUCTION	FORM 3 SCHEDULE OF VOTING RIGHTS
1	13, 14	106	170	1
2	13, 14	130	267	1
3	13, 14, 47	65	134	1
4	13, 14	128	268	1
5	13, 14	108	214	1
6	13, 14	103	214	1
7	13, 14	63	110	1
8	13, 14	81	160	1
9	13, 14	97	165	1
10	15, 16	102	170	1
11	15, 16	96	179	1
12	15, 16, 47	76	125	1
13	15, 16, 45	74	125	1
14	15, 16	96	179	1
15	15, 16	109	170	1
16	15, 16	102	183	1
17	15, 16	67	110	1
18	15, 16	82	130	1
19	15, 16	80	130	1
20	15, 16	83	130	1
21	15, 16, 45	75	120	1
22	15, 16	51	70	1
23	15, 16	51	70	1
24	15, 16, 47	76	120	1
25	15, 16	63	104	1
26	17, 18	103	185	1
27	17, 18	70	140	1
28	17, 18	86	130	1
29	17, 18, 47	84	163	1
30	17, 18	58	100	1
31	17, 18	57	100	1
32	17, 18, 45	87	162	1
33	17, 18	86	130	1
34	17, 18	90	166	1
35	17, 18	89	166	1
36	17, 18	104	185	1
37	17, 18	67	120	1
38	17, 18	81	150	1
39	17, 18	81	150	1
40	17, 18	83	150	1
41	17, 18, 45	76	130	1
42	17, 18	51	80	1
43	17, 18	51	80	1
44	17, 18, 47	76	130	1
45	17, 18	64	110	1
46	17, 18	97	150	1
47	17, 18	59	150	1
48	19, 20	45	100	1
49	19, 20, 47	87	170	1
50	19, 20	57	110	1

JUNE 1st, 1996

\95234\95234.THI

S-9136

STRATA PLAN
LMS 2446

CONDOMINIUM ACT

STRATA LOT	SHEET NUMBER	FORM 1 SCHEDULE OF UNIT ENTITLEMENT	FORM 2 SCHEDULE OF INTEREST UPON DESTRUCTION	FORM 3 SCHEDULE OF VOTING RIGHTS
51	19, 20	57	120	1
52	19, 20, 45	94	170	1
53	19, 20	45	100	1
54	19, 20	42	100	1
55	19, 20, 45	77	140	1
56	19, 20	51	85	1
57	19, 20	51	85	1
58	19, 47	56	140	1
59	19, 20	43	100	1
60	21, 22, 47	52	105	1
61	21, 22, 47	80	166	1
62	21, 22	57	115	1
63	21, 22	57	115	1
64	21, 22, 45	80	160	1
65	21, 22, 45	52	105	1
66	21, 22, 45	57	110	1
67	21, 22, 45	77	150	1
68	21, 22	51	90	1
69	21, 22	51	90	1
70	21, 22, 47	77	150	1
71	21, 22, 47	57	110	1
72	23, 24, 47	52	110	1
73	23, 24, 47	80	165	1
74	23, 24	57	120	1
75	23, 24	57	120	1
76	23, 24, 45	80	175	1
77	23, 24, 45	52	110	1
78	23, 24, 45	57	115	1
79	23, 24, 45	77	155	1
80	23, 24	51	95	1
81	23, 24	51	95	1
82	23, 24, 47	77	155	1
83	23, 24, 47	57	115	1
84	25, 26, 47	52	115	1
85	25, 26, 47	80	170	1
86	25, 26	57	125	1
87	25, 26	57	125	1
88	25, 26, 45	80	180	1
89	25, 26, 45	52	115	1
90	25, 26, 45	57	120	1
91	25, 26, 45	77	160	1
92	25, 26	51	100	1
93	25, 26	51	100	1
94	25, 47	56	160	1
95	25, 26, 47	57	120	1
96	27, 28, 47	52	120	1
97	27, 28, 47	80	175	1
98	27	41	130	1
99	27, 28	57	130	1
100	27, 28, 45	80	185	1

STRATA PLAN
LMS 2446

CONDOMINIUM ACT

STRATA LOT	SHEET NUMBER	FORM 1 SCHEDULE OF UNIT ENTITLEMENT	FORM 2 SCHEDULE OF INTEREST UPON DESTRUCTION	FORM 3 SCHEDULE OF VOTING RIGHTS
101	27, 28, 45	52	120	1
102	27, 28, 45	57	125	1
103	27, 28, 45	77	165	1
104	27, 28	51	105	1
105	27, 28	51	105	1
106	27, 28, 47	77	165	1
107	27, 28, 47	57	125	1
108	29, 30, 47	52	125	1
109	29, 30, 47	80	190	1
110	29, 30	57	135	1
111	29, 30	57	135	1
112	29, 30, 45	80	190	1
113	29, 30, 45	52	125	1
114	29, 30, 45	57	130	1
115	29, 30, 45	77	170	1
116	29, 30	51	110	1
117	29, 30	51	110	1
118	29, 47	56	170	1
119	29, 30, 47	58	130	1
120	31, 47, 48	39	130	1
121	31, 32, 47, 48	80	185	1
122	31, 32	57	147	1
123	31, 32	57	147	1
124	31, 32, 45, 46	80	195	1
125	31, 32, 45, 46	52	130	1
126	31, 32, 45, 46	57	135	1
127	31, 32, 45, 46	77	175	1
128	31, 32	51	125	1
129	31, 32	51	115	1
130	31, 32, 47, 48	77	175	1
131	31, 32, 47, 48	56	135	1
132	33, 34, 48	52	130	1
133	33, 34, 48	80	190	1
134	33, 34	57	152	1
135	33, 34	57	152	1
136	33, 34, 46	80	200	1
137	33, 34, 46	52	141	1
138	33, 34, 46	57	140	1
139	33, 34, 46	77	180	1
140	33, 34	51	130	1
141	33, 34	51	120	1
142	33, 34, 48	77	180	1
143	33, 34, 48	56	156	1
144	35, 48	39	105	1
145	35, 48	56	150	1
146	35	41	110	1
147	35	41	110	1
148	35, 46	56	150	1
149	35, 46	39	105	1
150	35, 46	44	117	1

STRATA PLAN
LMS 2446

CONDOMINIUM ACT

STRATA LOT	SHEET NUMBER	FORM 1 SCHEDULE OF UNIT ENTITLEMENT	FORM 2 SCHEDULE OF INTEREST UPON DESTRUCTION	FORM 3 SCHEDULE OF VOTING RIGHTS
151	35, 46	56	148	1
152	35	35	100	1
153	35	35	100	1
154	35, 48	56	148	1
155	35, 48	43	115	1
156	36, 48	101	287	1
157	36	29	84	1
158	36	31	88	1
159	36, 46	43	123	1
160	36	8	23	1
161	36, 46	44	127	1
162	36, 46	90	256	1
163	36	35	99	1
164	36	35	99	1
165	36, 48	3*	90	1
166	36, 48	11	32	1
167	36, 48	45	129	1
168	37, 48	69	220	1
169	37	41	110	1
170	37	41	110	1
171	37, 46	69	220	1
172	37, 46	72	230	1
173	37	35	90	1
174	37	35	90	1
175	37, 48	71	230	1
176	38, 48	66	160	1
177	38	41	111	1
178	38	41	111	1
179	38, 46	67	150	1
180	38, 46	70	155	1
181	38	35	91	1
182	38	35	91	1
183	38, 48	69	160	1
184	39, 48	66	161	1
185	39	41	112	1
186	39	41	112	1
187	39, 46	67	151	1
188	39, 46	70	156	1
189	39	35	92	1
190	39	35	92	1
191	39, 46	69	161	1
192	40, 46	65	152	1
193	40	41	113	1
194	40	41	113	1
195	40, 46	66	152	1
196	40, 46	70	157	1
197	40	35	93	1
198	40	35	93	1
199	40, 48	69	162	1
200	41, 48	65	153	1

STRATA PLAN
LMS 2446

CONDOMINIUM ACT

STRATA LOT	SHEET NUMBER	FORM 1 SCHEDULE OF UNIT ENTITLEMENT	FORM 2 SCHEDULE OF INTEREST UPON DESTRUCTION	FORM 3 SCHEDULE OF VOTING RIGHTS
201	41	41	114	1
202	41	41	114	1
203	41, 46	66	153	1
204	41, 46	70	158	1
205	41	35	94	1
206	41	35	94	1
207	41, 48	69	163	1
208	42, 48	60	164	1
209	42	38	115	1
210	42	38	115	1
211	42, 46	61	154	1
212	42, 46	65	159	1
213	42	31	95	1
214	42	31	95	1
215	42, 48	64	164	1
216	43, 44, 48	70	220	1
217	43, 44	53	160	1
218	43, 44	53	160	1
219	43, 44, 46	67	220	1
220	43, 44, 46	76	230	1
221	43	31	125	1
222	43	31	125	1
223	43, 44, 48	76	230	1
	AGGREGATE	13755	30,780	223

JUNE 1st, 1998

S-9136

SHEET 8 OF 50 SHEETS.
STRATA PLAN
LMS 2446

S-9136

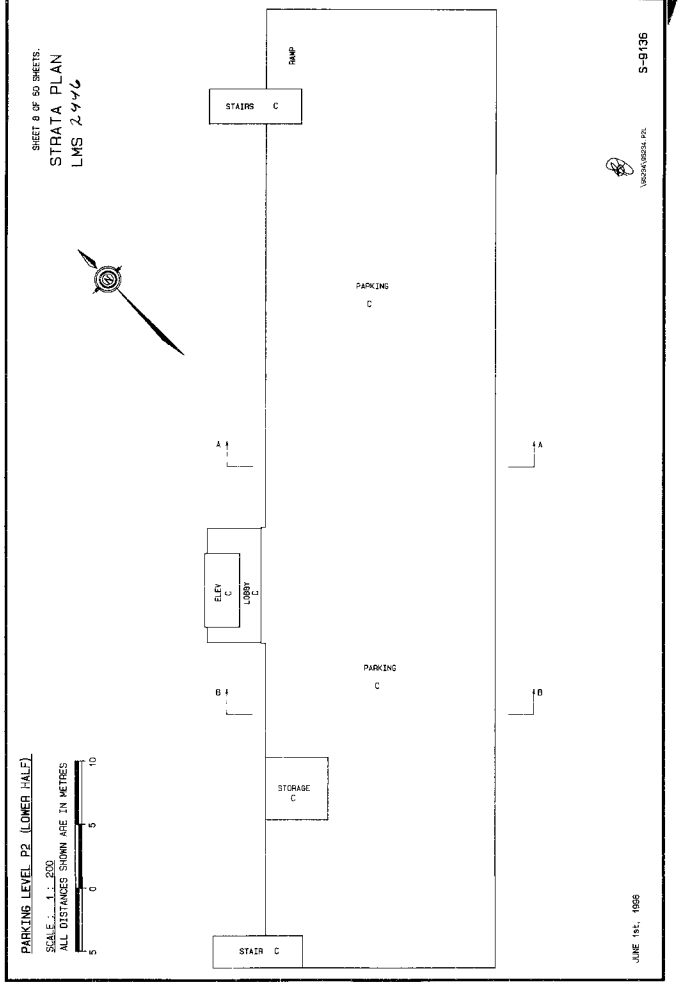

PARKING LEVEL P2 (LOWER HALF)
SCALE : 1 : 200
ALL DISTANCES SHOWN ARE IN METRES
10 5 0 5

JUNE 1st, 1998

SHEET 9 OF 50 SHEETS.
STRATA PLAN
LMS 2446

S-9136

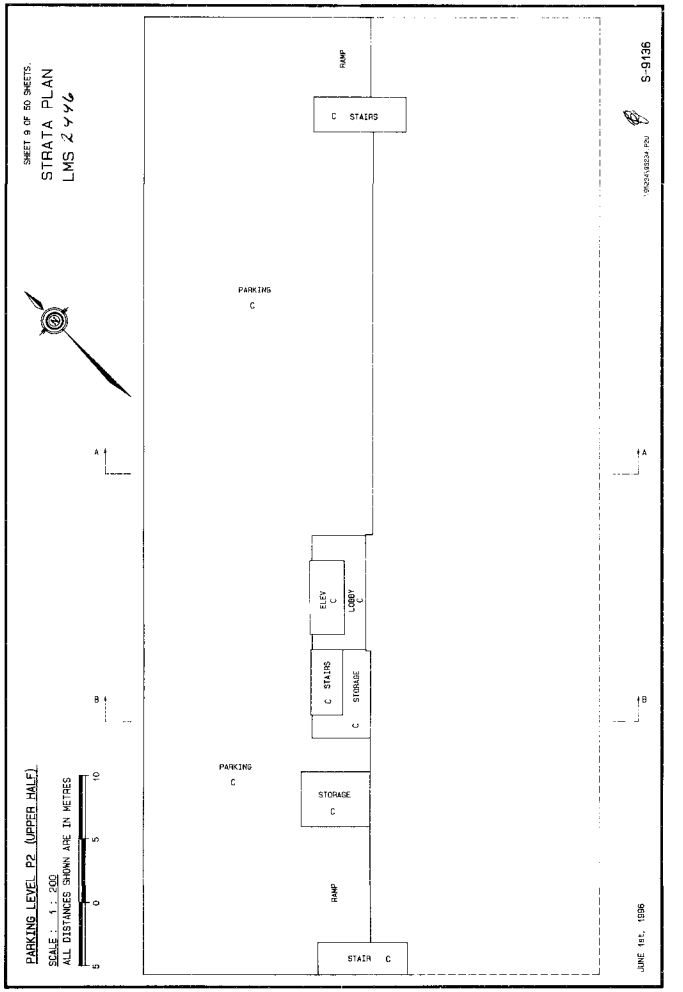

PARKING LEVEL P2 (UPPER HALF)
SCALE : 1 : 200
ALL DISTANCES SHOWN ARE IN METRES
10 5 0 5

JUNE 1st, 1998

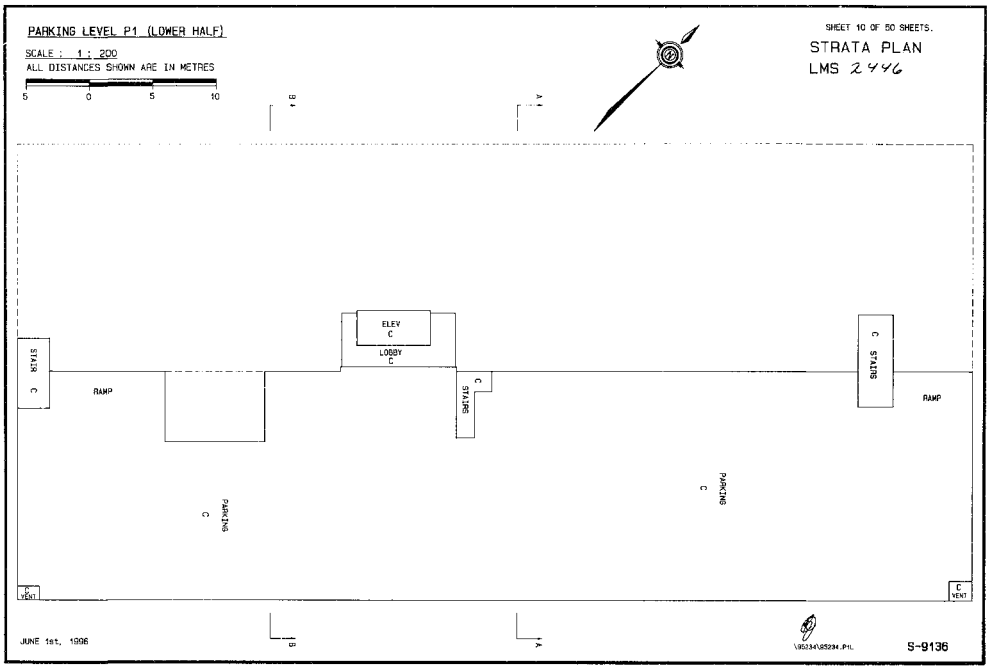
PARKING LEVEL P1 (LOWER HALF)
SCALE : 1 : 200
ALL DISTANCES SHOWN ARE IN METRES
5 0 5 10
SHEET 10 OF 50 SHEETS.
STRATA PLAN
LMS 2446
ELEV C
LOBBY C
STAIR C
RAMP
STAIRS C
STAIRS C
RAMP
PARKING C
PARKING C
C VENT
C VENT
JUNE 1st, 1996
S-9136

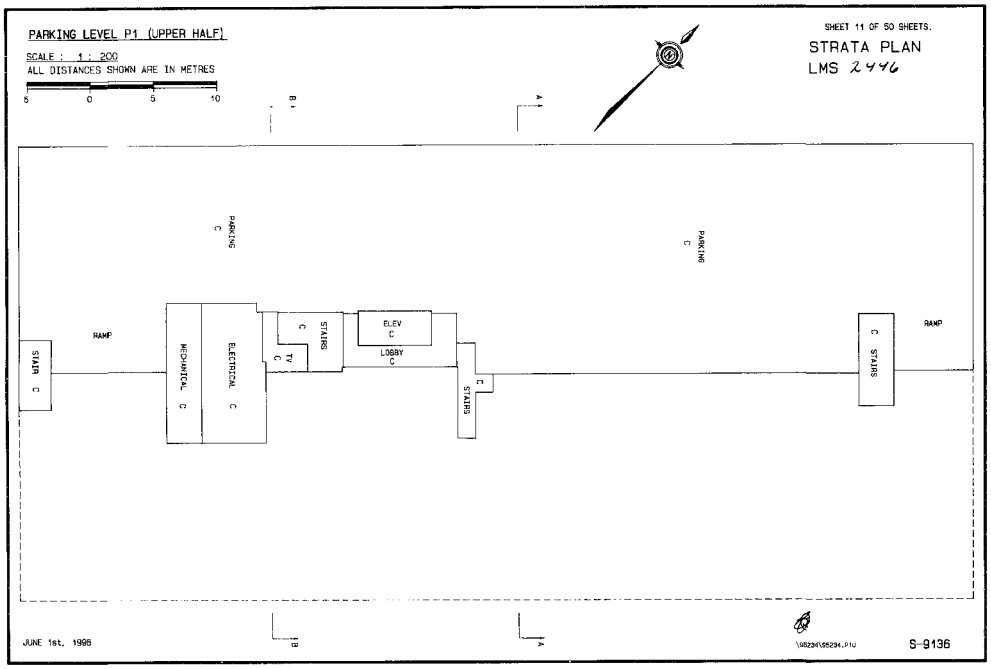
PARKING LEVEL P1 (UPPER HALF)
SCALE : 1 : 200
ALL DISTANCES SHOWN ARE IN METRES
5 0 5 10
SHEET 11 OF 50 SHEETS.
STRATA PLAN
LMS 2446
PARKING C
PARKING C
RAMP
STAIR C
MECHANICAL C
ELECTRICAL C
TV C
STAIRS
ELEV C
LOBBY C
STAIRS C
STAIRS C
RAMP
JUNE 1st, 1996
S-9136

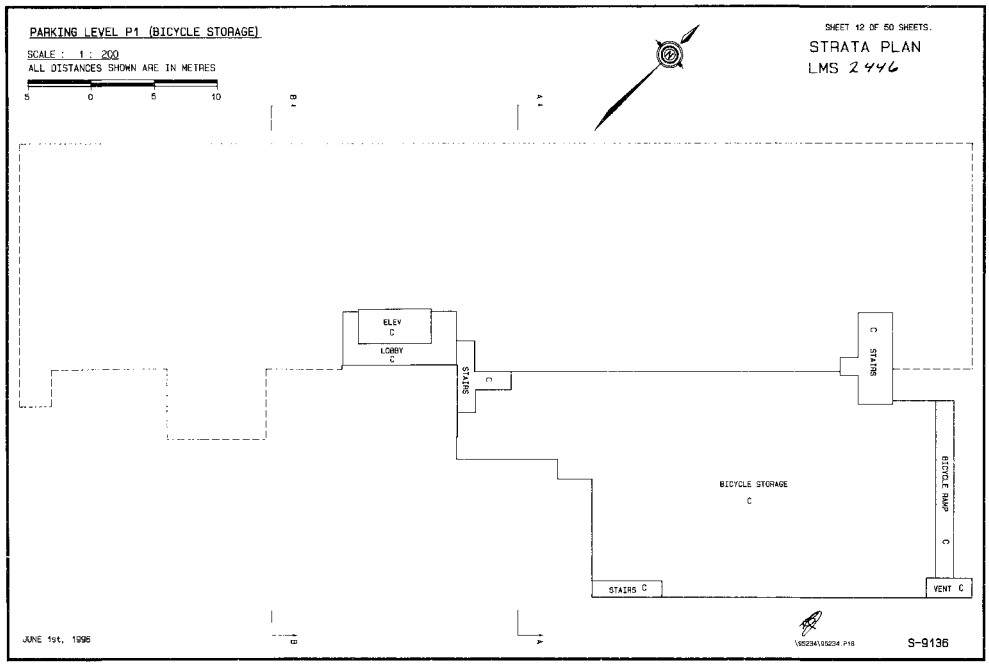
PARKING LEVEL P1 (BICYCLE STORAGE)
SCALE : 1 : 200
ALL DISTANCES SHOWN ARE IN METRES
5 0 5 10
SHEET 12 OF 50 SHEETS.
STRATA PLAN
LMS 2446
ELEV C
LOBBY C
STAIRS
STAIRS C
BICYCLE STORAGE C
BICYCLE RAMP C
STAIRS C
VENT C
JUNE 1st, 1996
S-9136

SHEET 13 OF 50 SHEETS.

STRATA PLAN
LMS 2446

GROUND FLOOR

SCALE : 1 : 200
ALL DISTANCES SHOWN ARE IN METRES

5 0 5 10

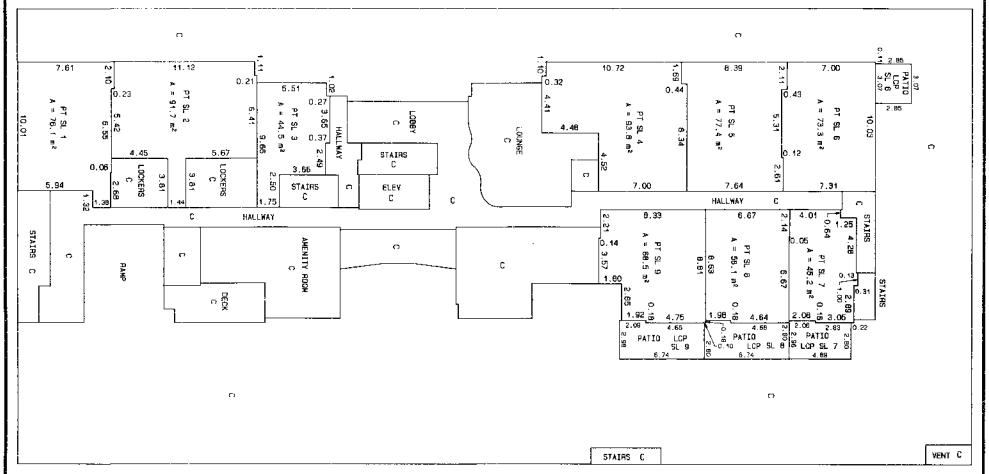

JUNE 1st, 1998

S-9136

SHEET 14 OF 50 SHEETS.

STRATA PLAN
LMS 2446

GROUND FLOOR LOFTS

SCALE : 1 : 200
ALL DISTANCES SHOWN ARE IN METRES

5 0 5 10

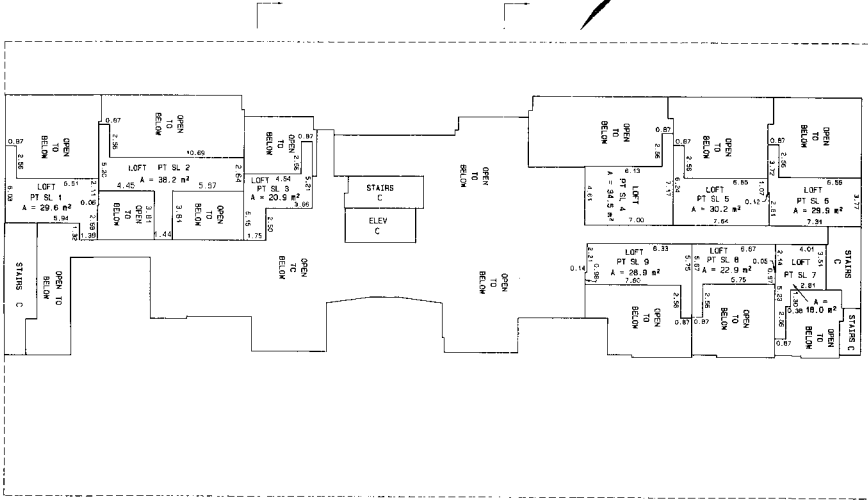

JUNE 1st, 1998

S-9136

SHEET 15 OF 50 SHEETS.

STRATA PLAN
LMS 2446

SECOND FLOOR

SCALE : 1 : 200
ALL DISTANCES SHOWN ARE IN METRES

5 0 5 10

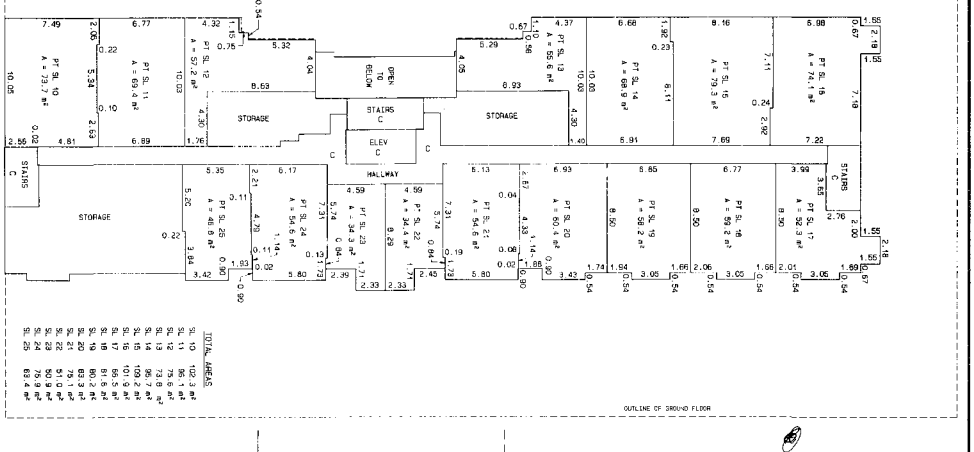

JUNE 1st, 1998

S-9136

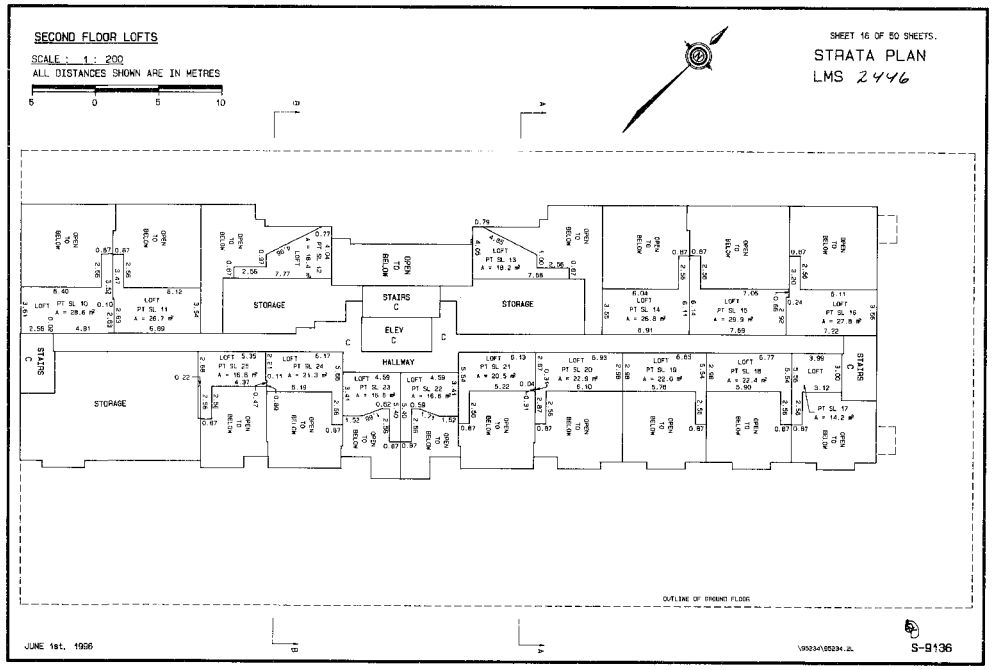
SECOND FLOOR LOFTS
SCALE : 1 : 200
ALL DISTANCES SHOWN ARE IN METRES
SHEET 16 OF 50 SHEETS.
STRATA PLAN
LMS 2446
STORAGE
STAIRS C
ELEV C
HALLWAY
OUTLINE OF GROUND FLOOR
JUNE 1st, 1996
S-9136

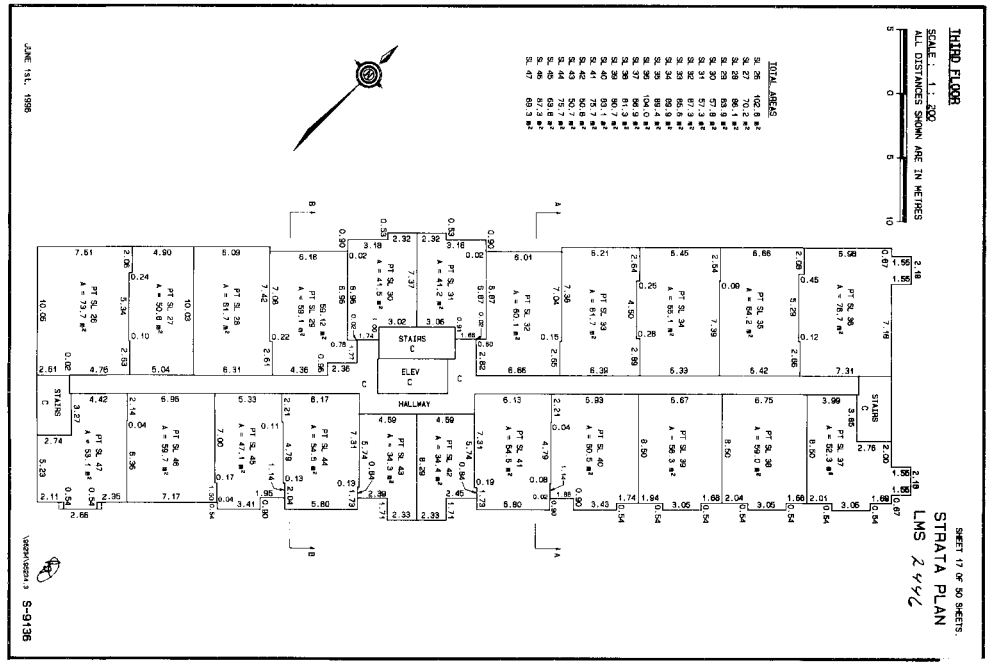
THIRD FLOOR
SCALE : 1 : 200
ALL DISTANCES SHOWN ARE IN METRES
TOTAL AREAS
SHEET 17 OF 50 SHEETS.
STRATA PLAN
LMS 2446
JUNE 1st, 1996
S-9136

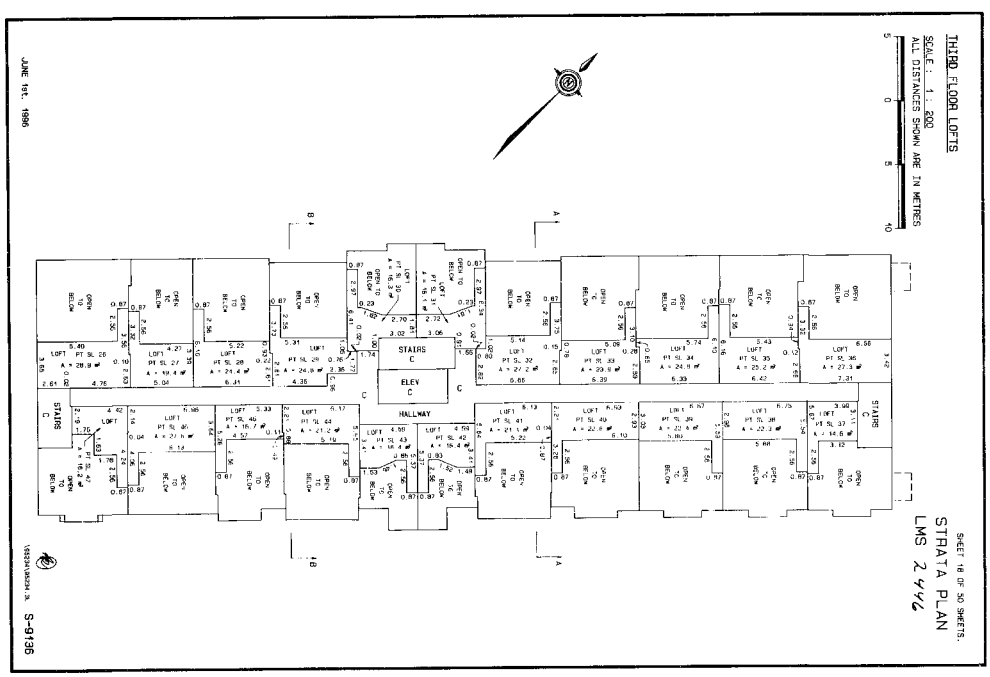
THIRD FLOOR LOFTS
SCALE : 1 : 200
ALL DISTANCES SHOWN ARE IN METRES
SHEET 18 OF 50 SHEETS.
STRATA PLAN
LMS 2446
JUNE 1st, 1996
S-9136

FOURTH FLOOR

SCALE : 1 : 200
ALL DISTANCES SHOWN ARE IN METRES

5 0 5 10

SHEET 19 OF 50 SHEETS.
STRATA PLAN
LMS 2446

TOTAL AREAS

SL 48	45.4 m²
SL 49	97.4 m²
SL 50	57.2 m²
SL 51	57.2 m²
SL 52	93.6 m²
SL 53	45.0 m²
SL 54	42.2 m²
SL 55	76.9 m²
SL 56	51.2 m²
SL 57	51.2 m²
SL 58	56.0 m²
SL 59	42.5 m²

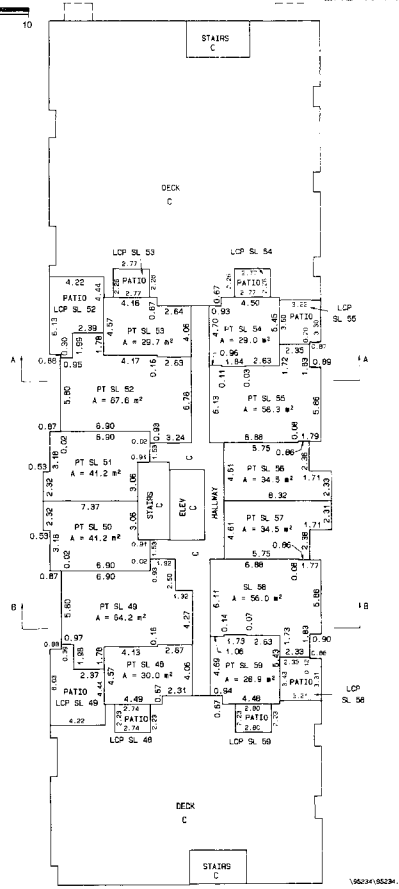

JUNE 1st, 1996

\95234\95234.4

S-9136

FOURTH FLOOR LOFTS

SCALE : 1 : 200
ALL DISTANCES SHOWN ARE IN METRES

5 0 5 10

SHEET 20 OF 50 SHEETS.
STRATA PLAN
LMS 2446

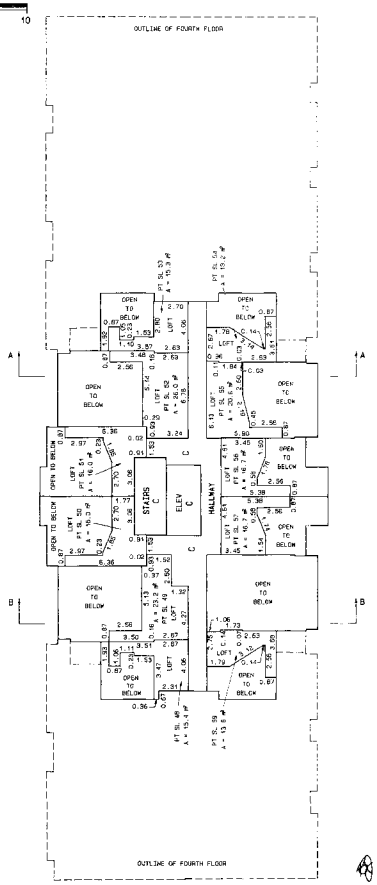

JUNE 1st, 1996

\95234\95234.4L

S-9136

FIFTH FLOOR

SCALE : 1 : 200
ALL DISTANCES SHOWN ARE IN METRES

5 0 5 10

SHEET 21 OF 50 SHEETS.
STRATA PLAN
LMS 2446

TOTAL AREAS

SL 60	56.7 m²
SL 61	60.0 m²
SL 62	57.2 m²
SL 63	57.2 m²
SL 64	80.1 m²
SL 65	56.4 m²
SL 66	51.2 m²
SL 67	77.1 m²
SL 68	51.2 m²
SL 69	51.2 m²
SL 70	76.6 m²
SL 71	60.9 m²

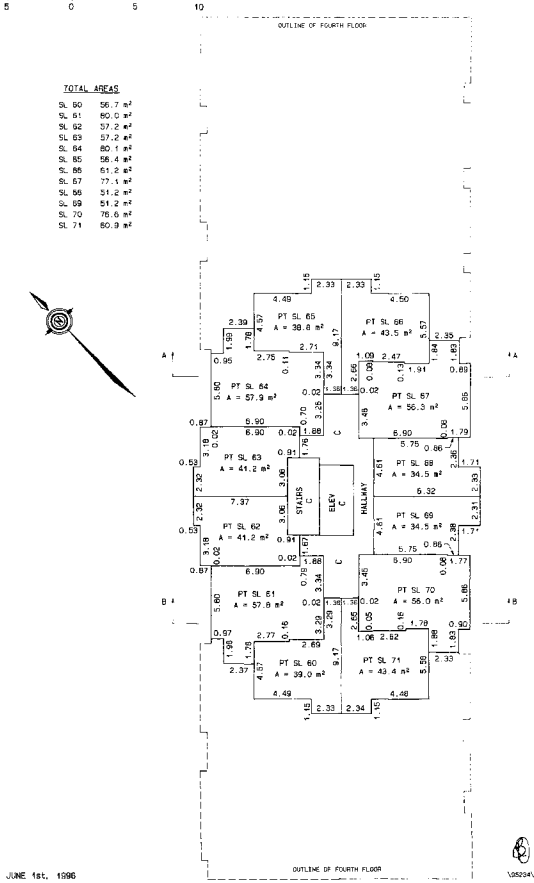

JUNE 1st, 1996

\95234\95234.5

S-9136

FIELD LM/MS/2416 KD5869 2005-07-26-10.20.01.497420

FIFTH FLOOR LOFTS

SCALE : 1 : 200
ALL DISTANCES SHOWN ARE IN METRES
5 0 5 10

SHEET 22 OF 50 SHEETS.
STRATA PLAN
LMS 2446

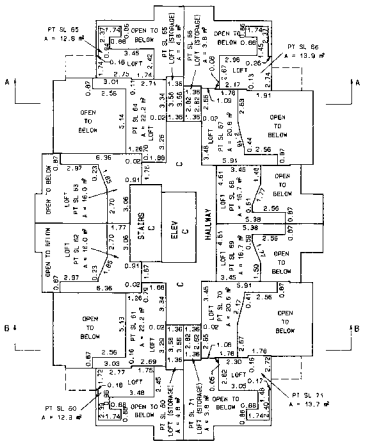

JUNE 1st, 1996

\95234\95234.SL

S-9136

SIXTH FLOOR

SCALE : 1 : 200
ALL DISTANCES SHOWN ARE IN METRES
5 0 5 10

SHEET 23 OF 50 SHEETS.
STRATA PLAN
LMS 2446

TOTAL AREAS

SL 72	56.9 m²
SL 73	80.1 m²
SL 74	57.2 m²
SL 75	57.2 m²
SL 76	80.1 m²
SL 77	56.6 m²
SL 78	61.2 m²
SL 79	77.0 m²
SL 80	51.2 m²
SL 81	51.2 m²
SL 82	76.6 m²
SL 83	61.0 m²

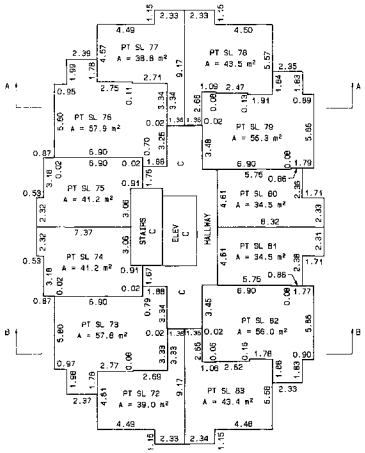

JUNE 1st, 1996

\95234\95234.6

S-9136

SIXTH FLOOR LOFTS

SCALE : 1 : 200
ALL DISTANCES SHOWN ARE IN METRES
5 0 5 10

SHEET 24 OF 50 SHEETS.
STRATA PLAN
LMS 2446

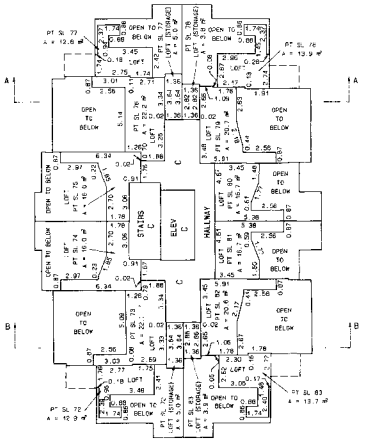

JUNE 1st, 1996

\95234\95234.6L

S-9136

SEVENTH FLOOR

SCALE : 1 : 200
ALL DISTANCES SHOWN ARE IN METRES

5 0 5 10

SHEET 25 OF 50 SHEETS.
STRATA PLAN
LMS 2446

TOTAL AREAS

SL 84	56.7 m²
SL 85	80.1 m²
SL 86	57.2 m²
SL 87	57.2 m²
SL 88	80.1 m²
SL 89	56.6 m²
SL 90	61.3 m²
SL 91	77.0 m²
SL 92	51.2 m²
SL 93	51.2 m²
SL 94	56.0 m²
SL 95	60.9 m²

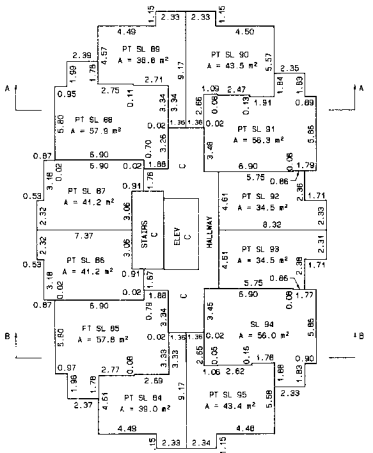

JUNE 1st. 1995

\95234\95234.7 S-9136

SEVENTH FLOOR LOFTS

SCALE : 1 : 200
ALL DISTANCES SHOWN ARE IN METRES

5 0 5 10

SHEET 26 OF 50 SHEETS.
STRATA PLAN
LMS 2446

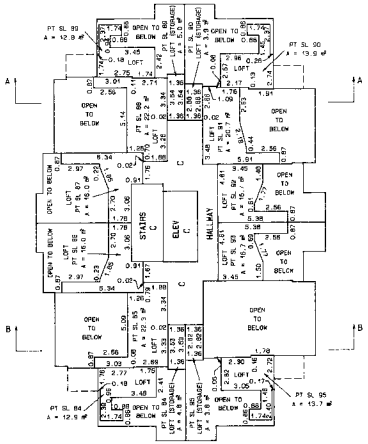

JUNE 1st. 1996

\95234\95234.7L S-9136

EIGHTH FLOOR

SCALE : 1 : 200
ALL DISTANCES SHOWN ARE IN METRES

5 0 5 10

SHEET 27 OF 50 SHEETS.
STRATA PLAN
LMS 2446

TOTAL AREAS

SL 96	56.8 m²
SL 97	80.1 m²
SL 98	41.2 m²
SL 99	57.2 m²
SL 100	80.1 m²
SL 101	56.4 m²
SL 102	51.2 m²
SL 103	77.0 m²
SL 104	51.2 m²
SL 105	51.2 m²
SL 106	75.6 m²
SL 107	60.9 m²

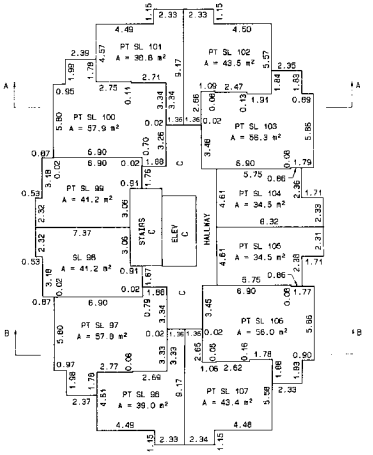

JUNE 1st. 1996

\95234\95234.8 S-9136

FILED CNL95244G 005869 2005-07-26-10.20.01.497420

EIGHTH FLOOR LOFTS

SHEET 28 OF 50 SHEETS.

STRATA PLAN
LMS 2446

SCALE : 1 : 200
ALL DISTANCES SHOWN ARE IN METRES

5 0 5 10

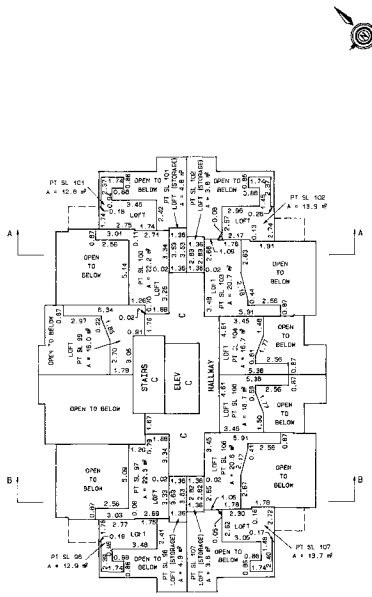

JUNE 1st, 1996

\95234\95234.6L

S-9136

NINTH FLOOR

SHEET 29 OF 50 SHEETS.

STRATA PLAN
LMS 2446

SCALE : 1 : 200
ALL DISTANCES SHOWN ARE IN METRES

5 0 5 10

TOTAL AREAS

SL 108	56.8 m²
SL 109	80.1 m²
SL 110	57.2 m²
SL 111	57.2 m²
SL 112	80.1 m²
SL 113	56.4 m²
SL 114	61.2 m²
SL 115	77.0 m²
SL 116	51.2 m²
SL 117	51.2 m²
SL 118	56.0 m²
SL 119	61.3 m²

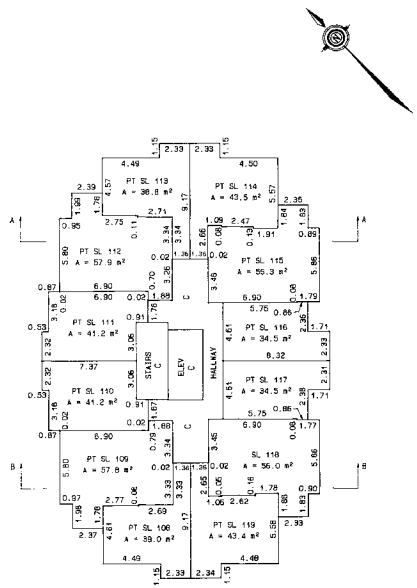

JUNE 1st, 1996

\95234\95234.9

S-9136

NINTH FLOOR LOFTS

SHEET 30 OF 50 SHEETS.

STRATA PLAN
LMS 2446

SCALE : 1 : 200
ALL DISTANCES SHOWN ARE IN METRES

5 0 5 10

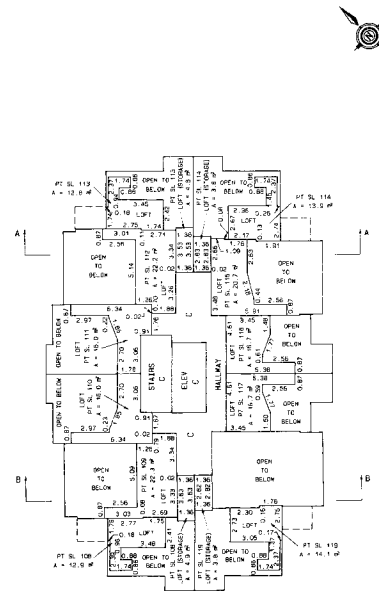

JUNE 1st, 1996

\95234\95234.9L

S-9136

TENTH FLOOR

SCALE : 1 : 200
ALL DISTANCES SHOWN ARE IN METRES

5 0 5 10

SHEET 31 OF 50 SHEETS.
STRATA PLAN
LMS 2446

TOTAL AREAS

SL 120	39.0 m²
SL 121	80.1 m²
SL 122	57.2 m²
SL 123	57.2 m²
SL 124	80.1 m²
SL 125	56.4 m²
SL 126	51.2 m²
SL 127	77.0 m²
SL 128	51.2 m²
SL 129	51.2 m²
SL 130	76.6 m²
SL 131	51.3 m²

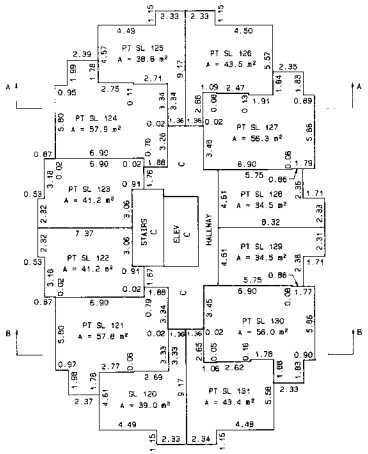

JUNE 1st. 1996

\95234\95234.10 S-9136

TENTH FLOOR LOFTS

SCALE : 1 : 200
ALL DISTANCES SHOWN ARE IN METRES

5 0 5 10

SHEET 32 OF 50 SHEETS.
STRATA PLAN
LMS 2446

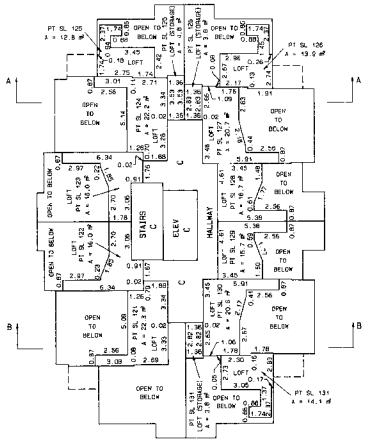

JUNE 1st. 1996

\95234\95234.10L S-9136

ELEVENTH FLOOR

SCALE : 1 : 200
ALL DISTANCES SHOWN ARE IN METRES

5 0 5 10

SHEET 33 OF 50 SHEETS.
STRATA PLAN
LMS 2446

TOTAL AREAS

SL 132	56.7 m²
SL 133	80.1 m²
SL 134	57.2 m²
SL 135	57.2 m²
SL 136	80.1 m²
SL 137	56.4 m²
SL 138	51.2 m²
SL 139	77.0 m²
SL 140	51.2 m²
SL 141	51.2 m²
SL 142	76.6 m²
SL 143	51.3 m²

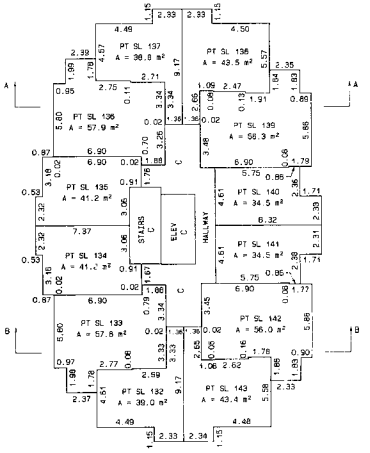

JUNE 1st. 1996

\95234\95234.11 S-9136

ELEVENTH FLOOR LOFTS

SCALE : 1 : 200
ALL DISTANCES SHOWN ARE IN METRES

5 0 5 10

SHEET 34 OF 50 SHEETS.
STRATA PLAN
LMS 2446

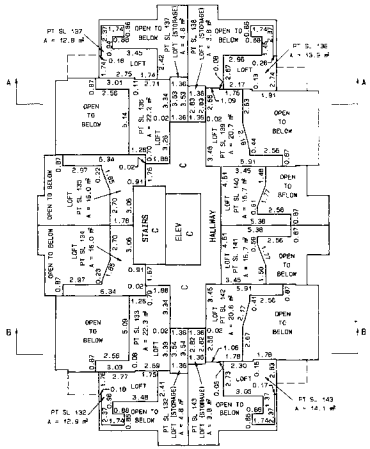

JUNE 1st, 1996

\95234\95234.11L

S-9136

TWELFTH FLOOR

SCALE : 1 : 200
ALL DISTANCES SHOWN ARE IN METRES

5 0 5 10

SHEET 35 OF 50 SHEETS.
STRATA PLAN
LMS 2446

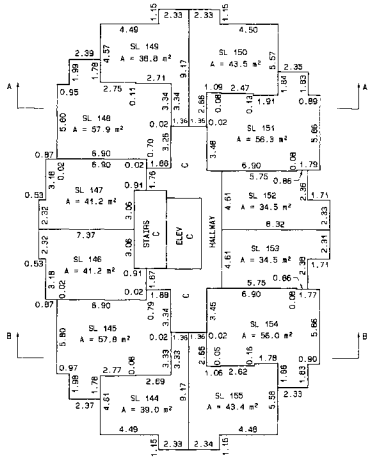

JUNE 1st, 1996

\95234\95234.12

S-9136

FOURTEENTH FLOOR

SCALE : 1 : 200
ALL DISTANCES SHOWN ARE IN METRES

5 0 5 10

NOTE: THE THIRTEENTH FLOOR IN THE BUILDING HAS BEEN NAMED THE FOURTEENTH FLOOR.

SHEET 36 OF 50 SHEETS.
STRATA PLAN
LMS 2446

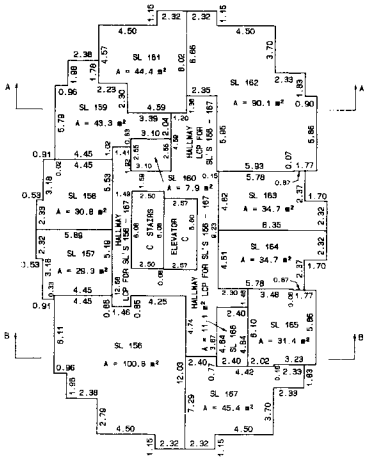

JUNE 1st, 1996

\95234\95234.14

S-9136

FILED LMS/S2446 800860 2003-07-29-10.38.04.457429

FIFTEENTH FLOOR

SCALE : 1 : 200
ALL DISTANCES SHOWN ARE IN METRES

5 0 5 10

SHEET 37 OF 50 SHEETS.
STRATA PLAN
LMS 2446

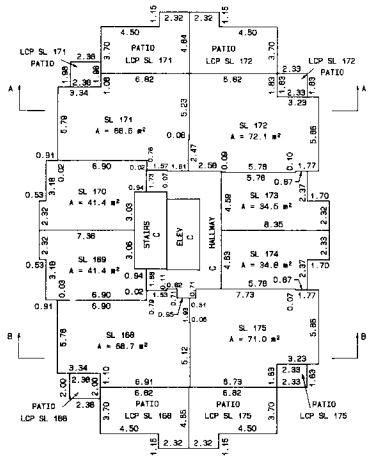

JUNE 1st, 1996

\95234\95234.15 S-9136

SIXTEENTH FLOOR

SCALE : 1 : 200
ALL DISTANCES SHOWN ARE IN METRES

5 0 5 10

SHEET 38 OF 50 SHEETS.
STRATA PLAN
LMS 2446

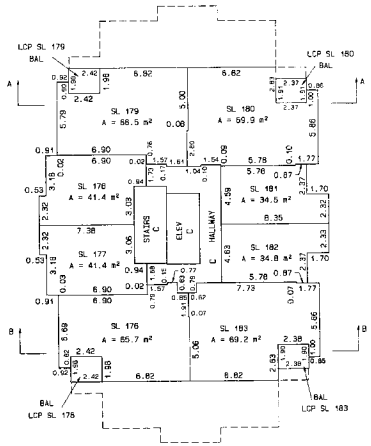

JUNE 1st, 1996

\95234\95234.16 S-9136

SEVENTEENTH FLOOR

SCALE : 1 : 200
ALL DISTANCES SHOWN ARE IN METRES

5 0 5 10

SHEET 39 OF 50 SHEETS.
STRATA PLAN
LMS 2446

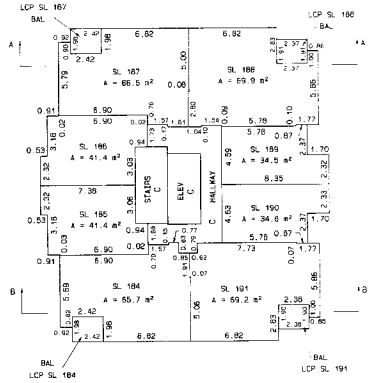

JUNE 1st, 1996

\95234\95234.17 S-9136

EIGHTEENTH FLOOR

SCALE : 1 : 200
ALL DISTANCES SHOWN ARE IN METRES

5 0 5 10

SHEET 40 OF 50 SHEETS.
STRATA PLAN
LMS 2446

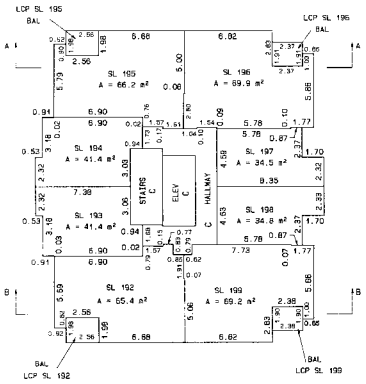

JUNE 1st, 1996

\95234\95294.18 S-9136

NINETEENTH FLOOR

SCALE : 1 : 200
ALL DISTANCES SHOWN ARE IN METRES

5 0 5 10

SHEET 41 OF 50 SHEETS.
STRATA PLAN
LMS 2446

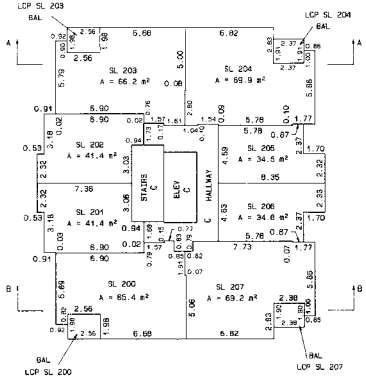

JUNE 1st, 1996

\95234\95294.19 S-9136

TWENTIETH FLOOR

SCALE : 1 : 200
ALL DISTANCES SHOWN ARE IN METRES

5 0 5 10

SHEET 42 OF 50 SHEETS.
STRATA PLAN
LMS 2446

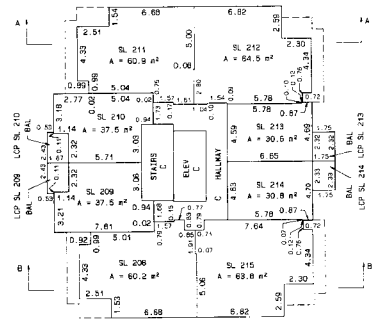

JUNE 1st, 1996

\95234\95294.20 S-9136

TWENTYFIRST FLOOR

SCALE : 1 : 200
ALL DISTANCES SHOWN ARE IN METRES

5 0 5 10

SHEET 43 OF 50 SHEETS.
STRATA PLAN
LMS 2446

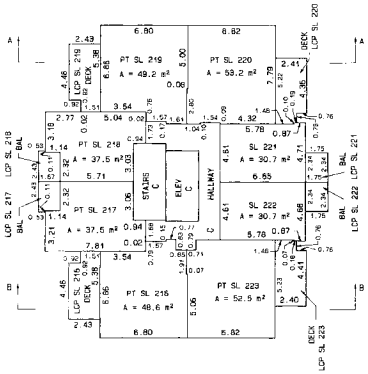

TOTAL AREAS

SL 215	69.6 m²
SL 217	52.6 m²
SL 218	52.5 m²
SL 219	67.2 m²
SL 220	76.4 m²
SL 223	75.6 m²

JUNE 1st, 1996

\95234\95234.21 S-9136

TWENTYSECOND FLOOR

SCALE : 1 : 200
ALL DISTANCES SHOWN ARE IN METRES

5 0 5 10

SHEET 44 OF 50 SHEETS.
STRATA PLAN
LMS 2446

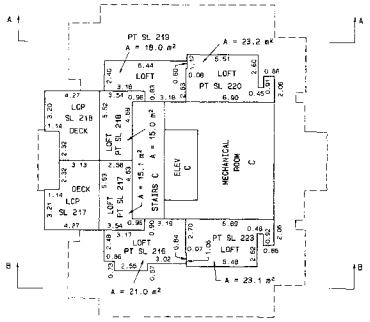

JUNE 1st, 1996

\95234\95234.22 S-9136

SECTION A - A (LOWER PORTION)

SCALE : 1 : 200
ALL DISTANCES SHOWN ARE IN METRES

5 0 5 10

SHEET 45 OF 50 SHEETS.
STRATA PLAN
LMS 2446

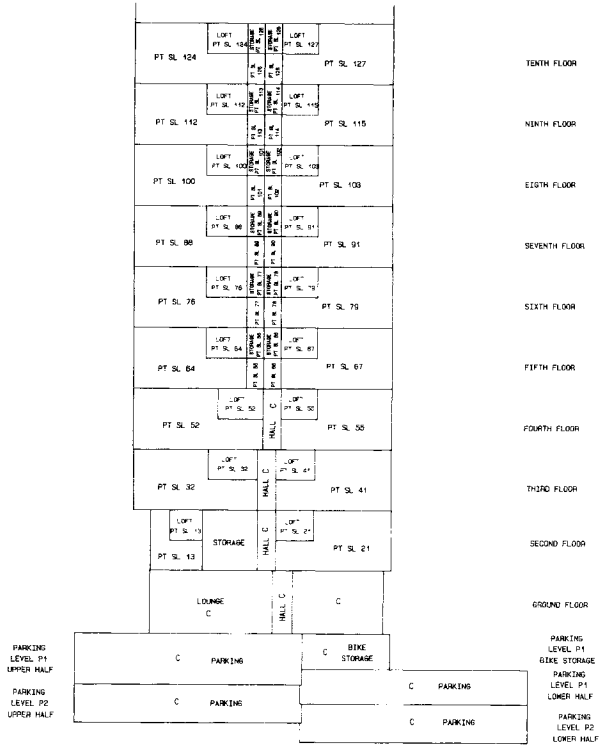

JUNE 1st, 1996

\95234\95234.A41 S-9136

FILED LMS2446 R05860 2005-07-26-10.20.01.197420

SECTION A - A (UPPER PORTION)

SCALE : 1 : 200

ALL DISTANCES SHOWN ARE IN METRES

5 0 5 10

SHEET 46 OF 50 SHEETS.

STRATA PLAN

LMS 2446

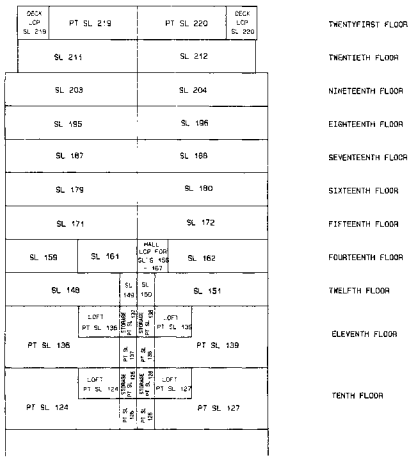

JUNE 1st, 1996

\95234\95234.AA2

S-9136

SECTION B - B (LOWER PORTION)

SCALE : 1 : 200

ALL DISTANCES SHOWN ARE IN METRES

5 0 5 10

SHEET 47 OF 50 SHEETS.

STRATA PLAN

LMS 2446

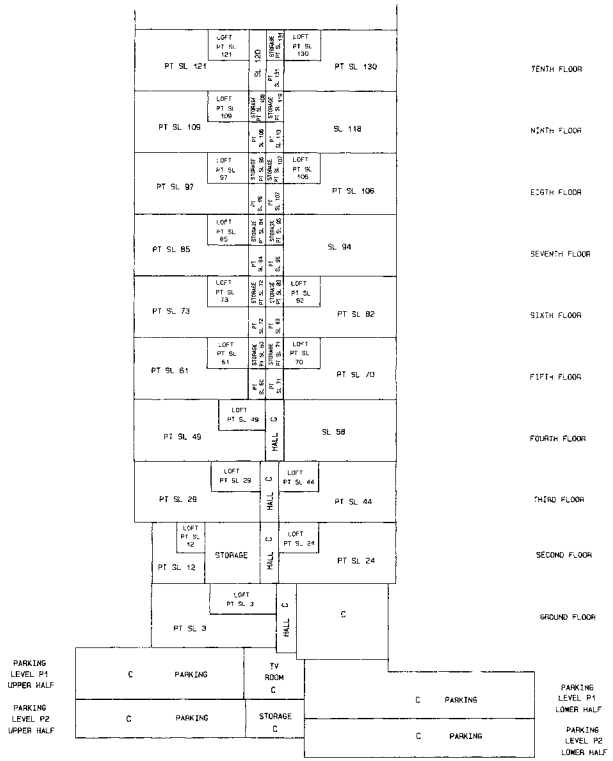

JUNE 1st, 1996

\95234\95234.BB1

S-9136

SECTION B - B (UPPER PORTION)

SCALE : 1 : 200

ALL DISTANCES SHOWN ARE IN METRES

5 0 5 10

SHEET 48 OF 50 SHEETS.

STRATA PLAN

LMS 2446

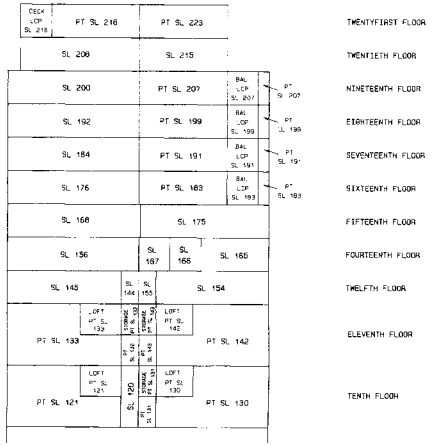

JUNE 1st, 1996

\95234\95234.BB2

S-9136

FILED LMLMS2446 R05869 2005-07-26-10.20.01.497420

STRATA PLAN
LMS 2446

RECORD OF BY-LAWS AND ORDERS ETC.

FILING		DOCUMENTS	
NUMBER	DATE	DATE	NATURE AND PARTICULARS

STRATA PLAN
LMS 2446

DEALINGS AFFECTING THE COMMON PROPERTY

REGISTRATION		DOCUMENT	
NUMBER	DATE	DATE	NATURE AND PARTICULARS
			COMMON PROPERTY SHEET CLOSED 18/6/96
			SEARCH ALTOS 2 OR BC ONLINE FOR
			CURRENT INFORMATION BC REG. 76/95
			LINDA J. O'SHEA, REGISTRAR
			VANCOUVER NEW WESTMINSTER
			LAND TITLE DISTRICT