Woodsmith® PLANS

Shop Drawings

SHOP TESTED
total success guaranteed

Cabinet-Base Workbench

©2019 Cruz Bay Publishing, Inc. an Active Interest Media Company

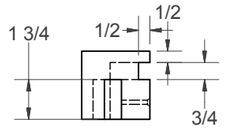

FRONT LEFT LEG

(RIGHT LEG IS A
MIRROR OF LEFT)

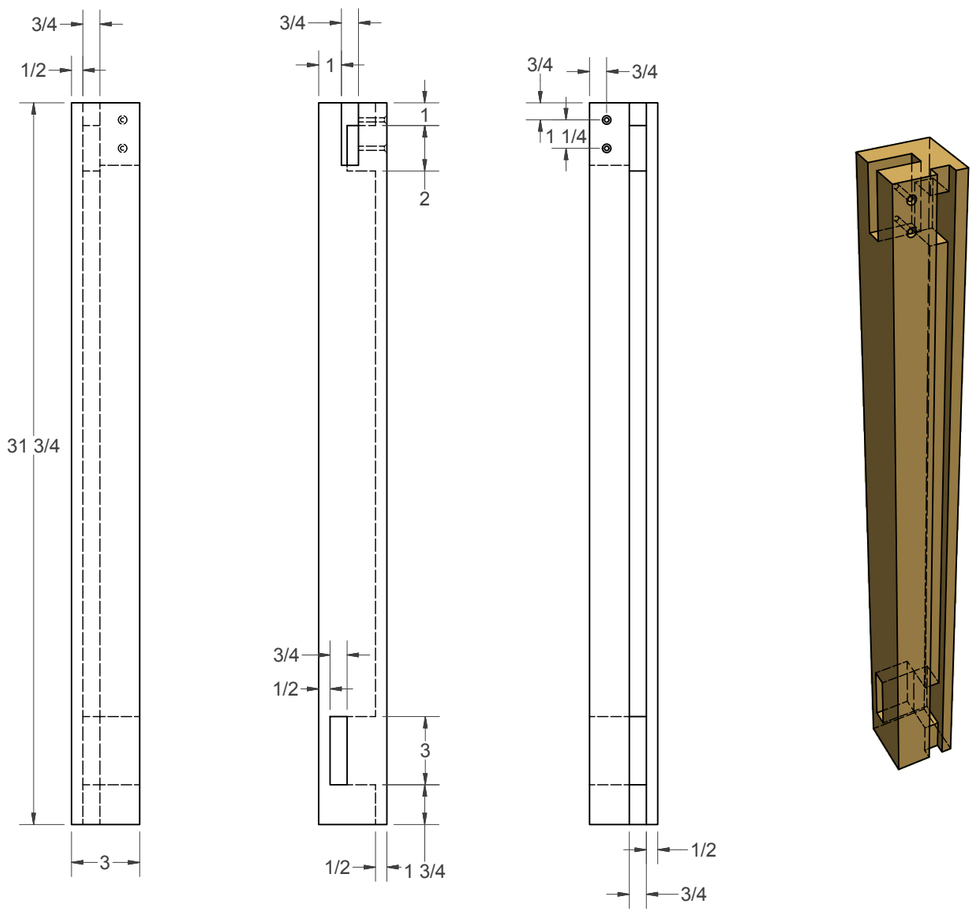

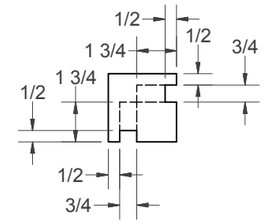

REAR LEFT LEG

(RIGHT LEG IS THE
SAME AS THE LEFT)

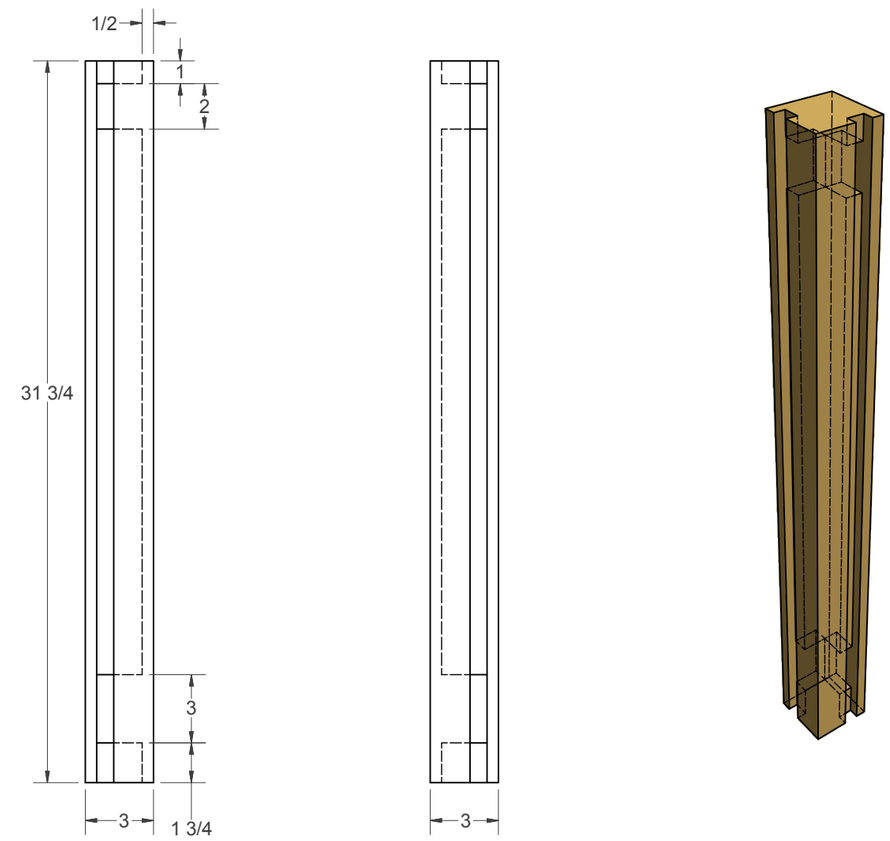

SN08416	CABINET-BASE WORKBENCH	WoodsmithPlans.com	1-14

LOWER FRONT RAIL

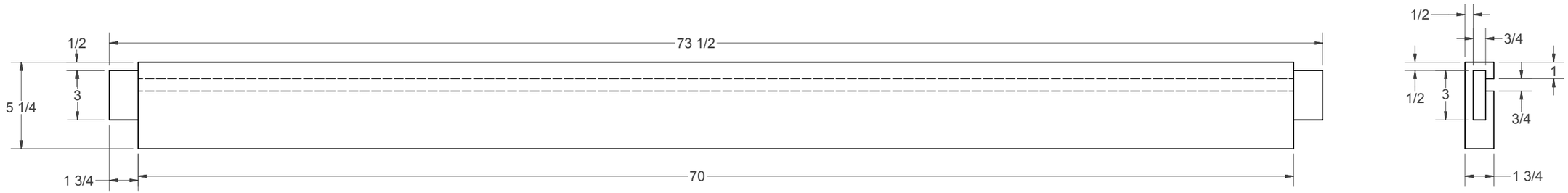

LOWER REAR RAIL

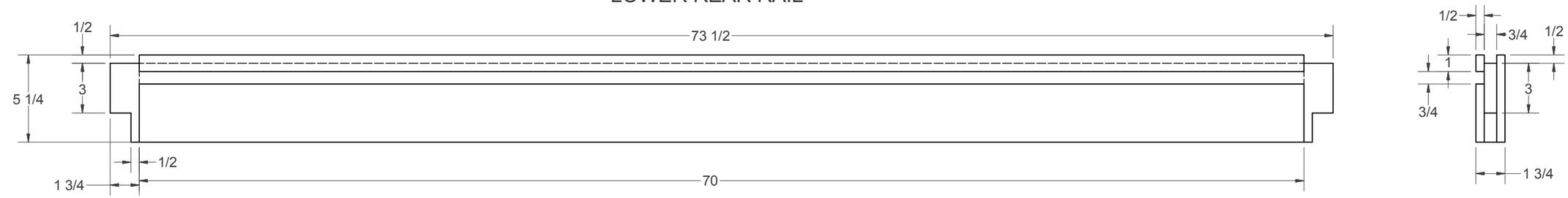

UPPER FRONT RAIL

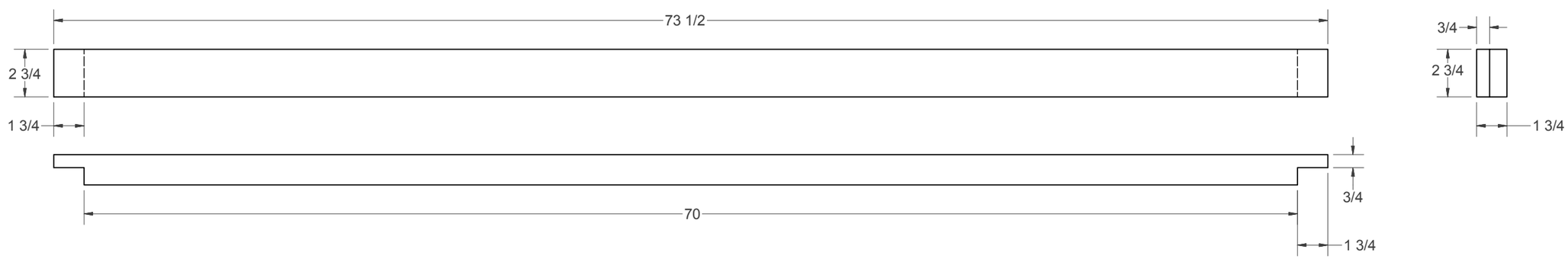

UPPER REAR RAIL

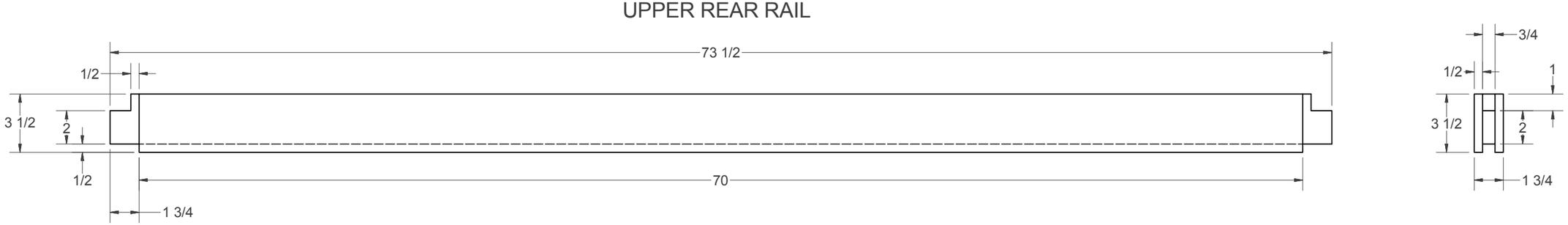

UPPER SIDE RAIL

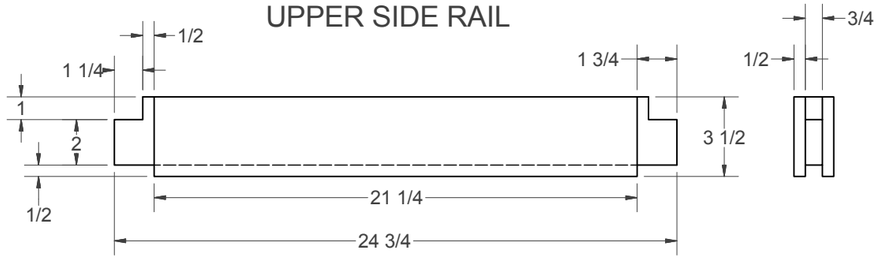

LOWER SIDE RAIL

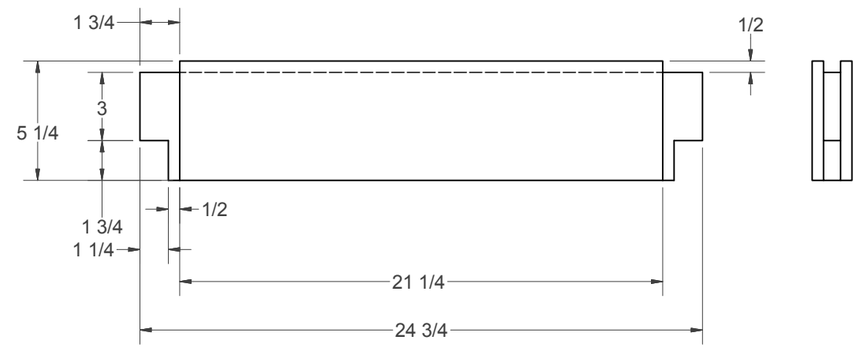

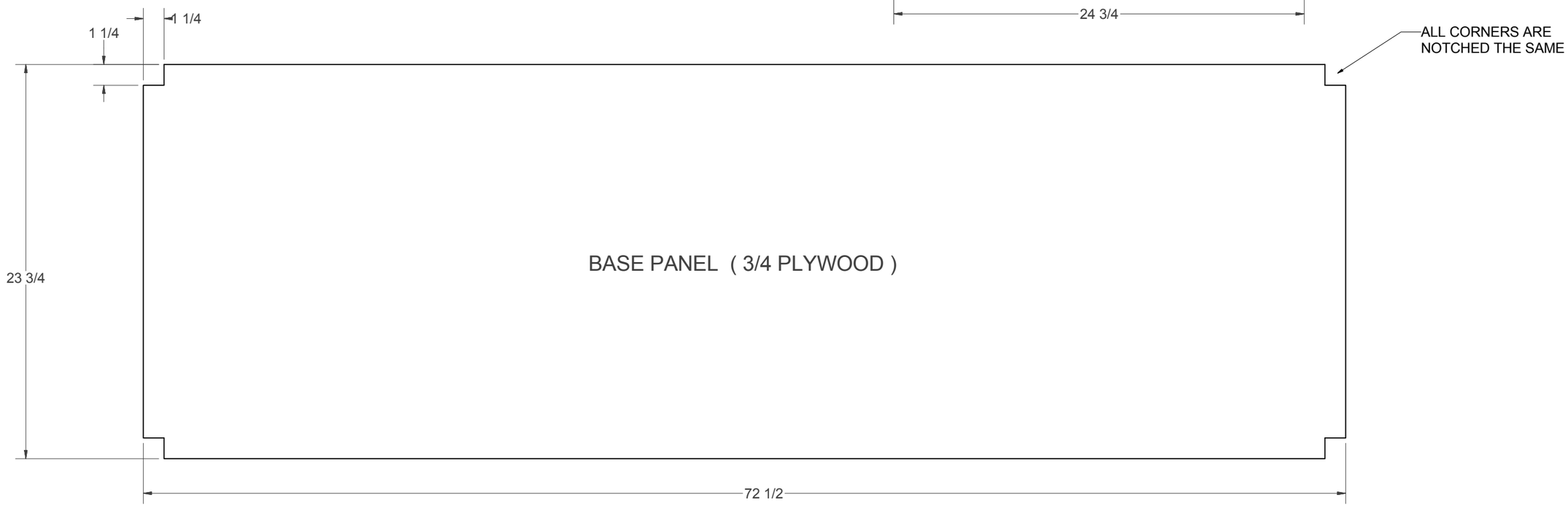

BASE PANEL SUPPORT

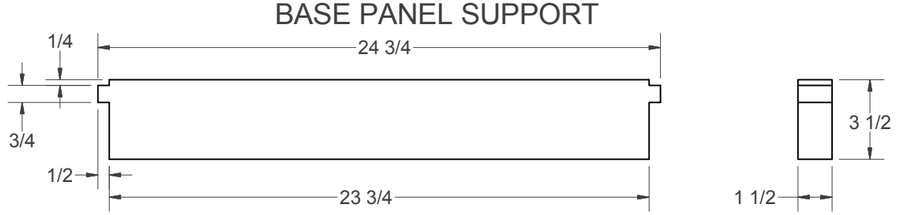

SN08416	CABINET-BASE WORKBENCH	WoodsmithPlans.com	3-14

SIDE PANEL

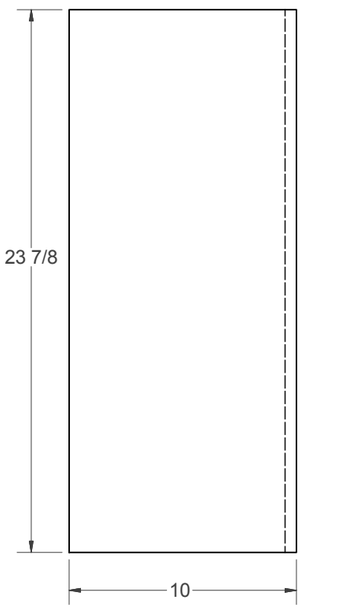

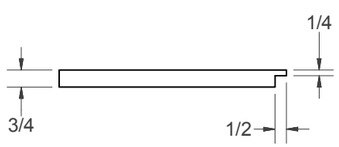

BACK END PANEL

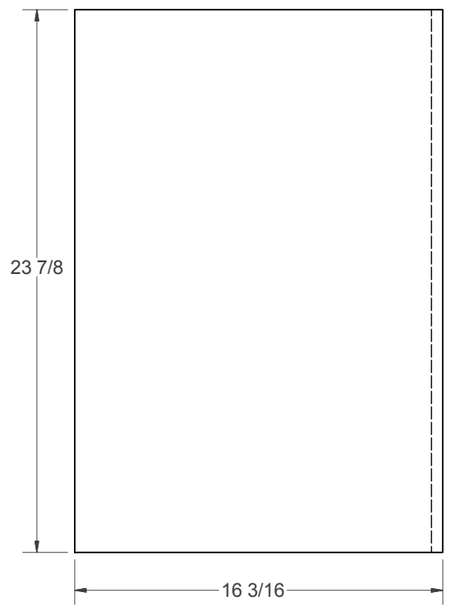

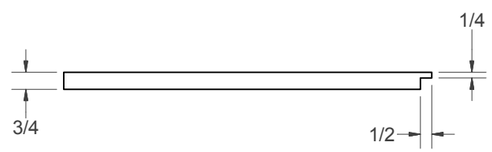

BACK CENTER PANEL

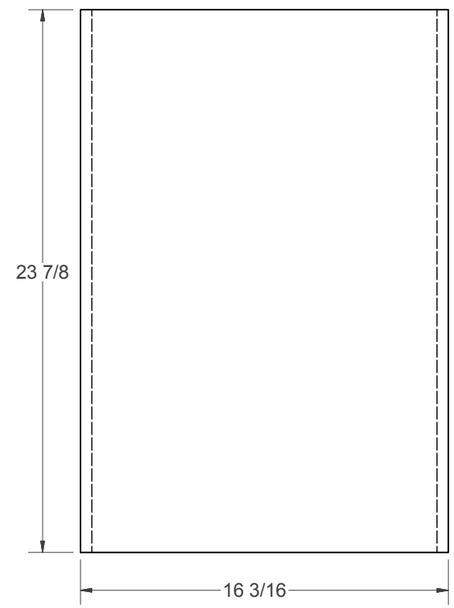

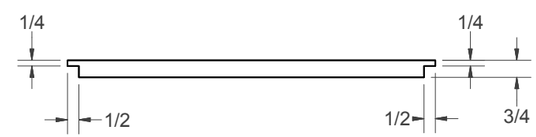

STILE

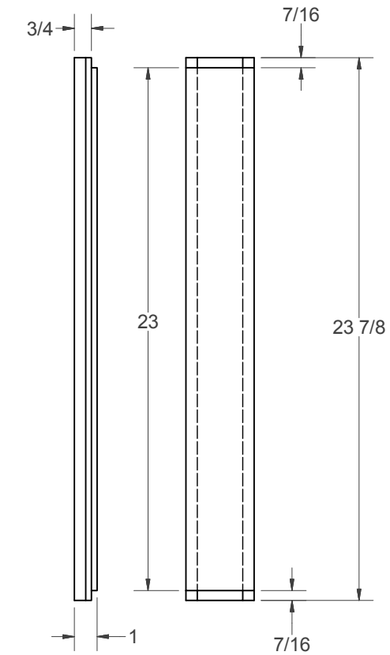

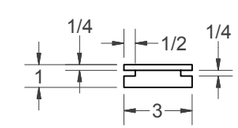

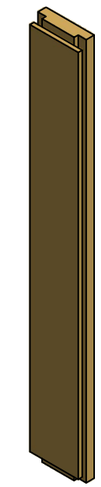

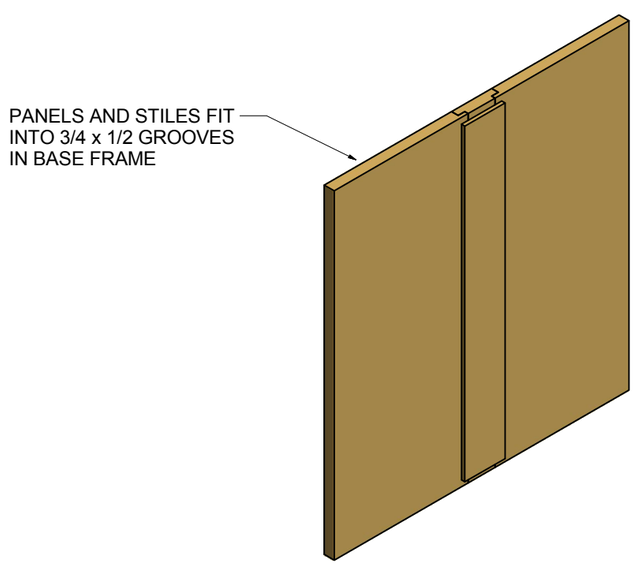

TYPICAL PANEL CONSTRUCTION

DRAWER CASE SIDE

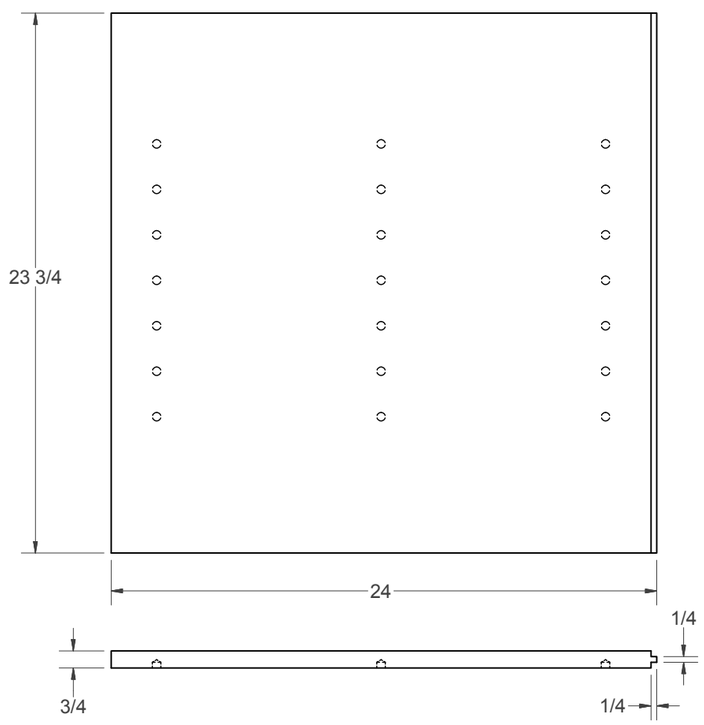

STILE

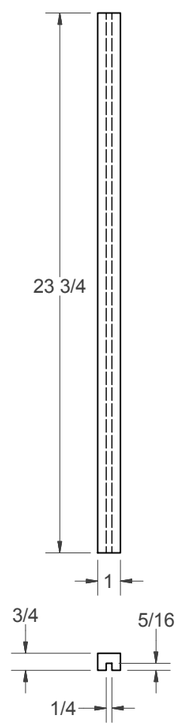

GUIDE FRONT

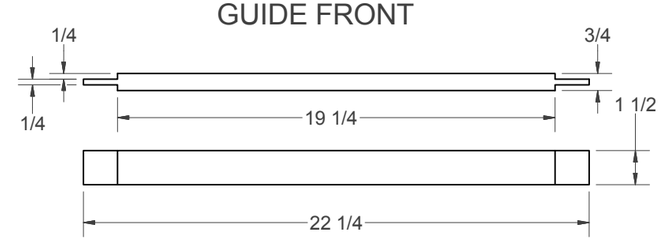

RAIL

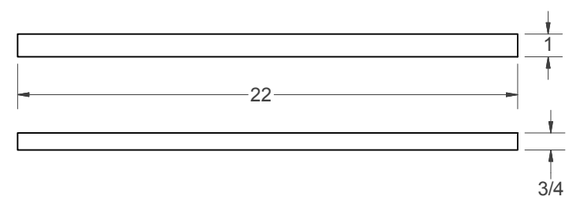

STOP

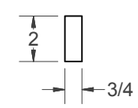

GUIDE SIDE

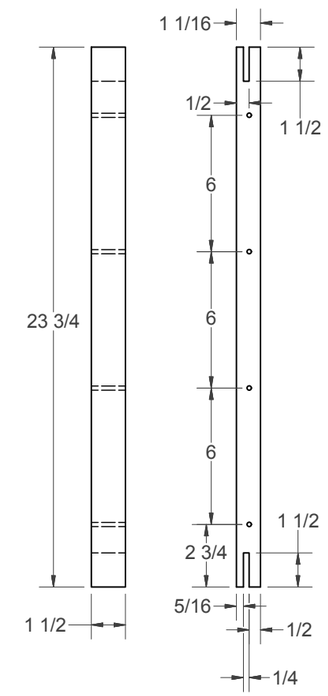

GUIDE SHIM

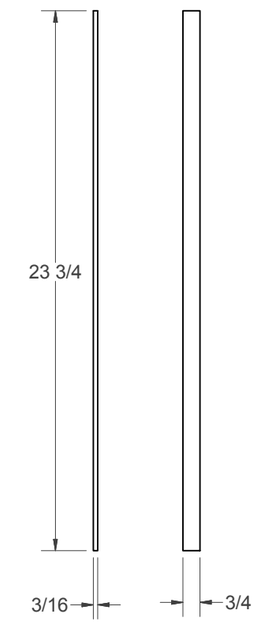

TOP GUIDE

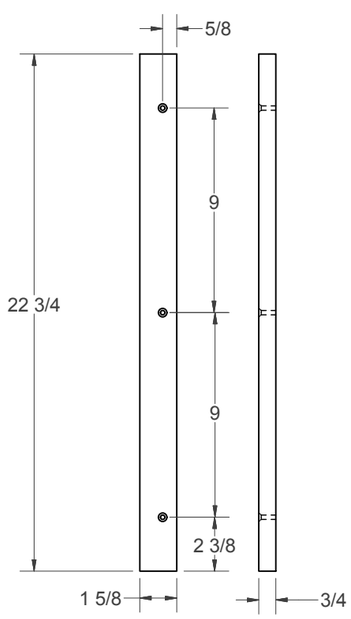

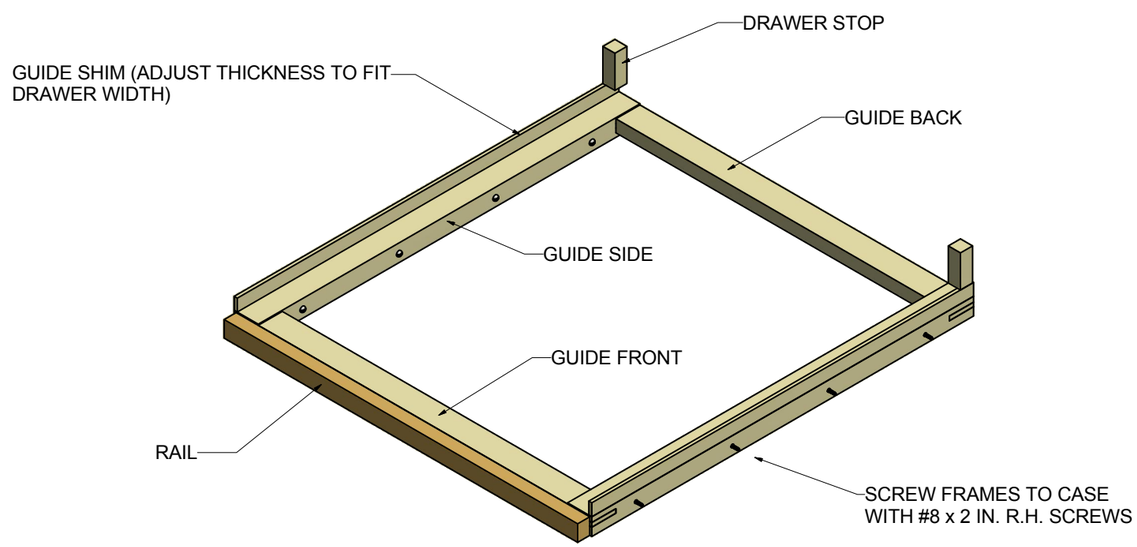

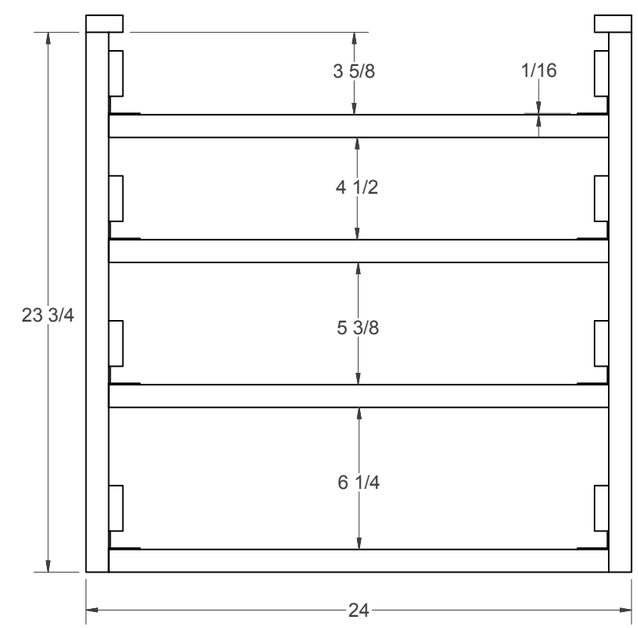

SN08416	CABINET-BASE WORKBENCH	WoodsmithPlans.com	5-14

DRAWER FRONTS

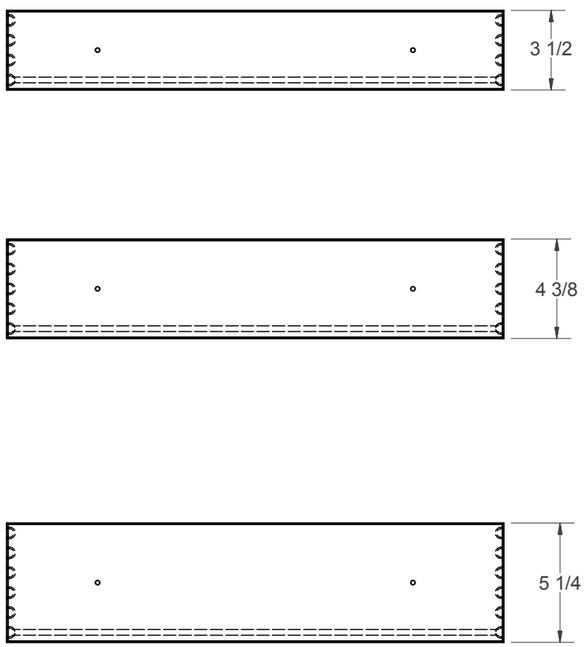

DRAWER SIDE (TYPICAL)

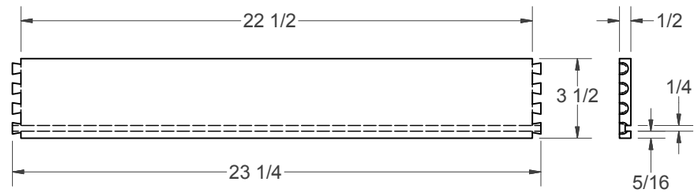

DRAWER BOTTOM

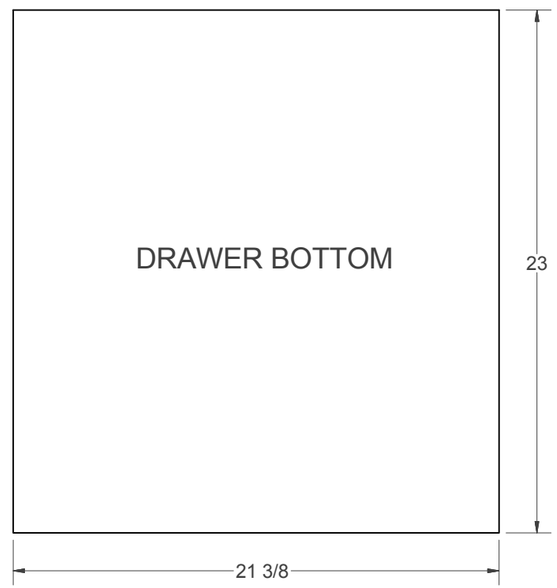

DOOR STILE

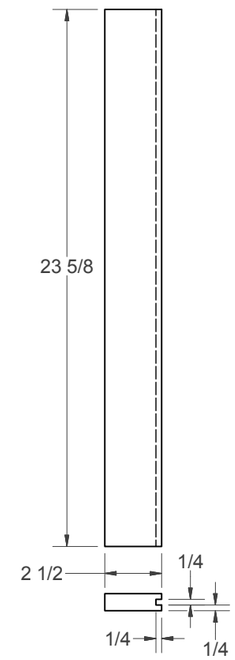

DOOR RAIL

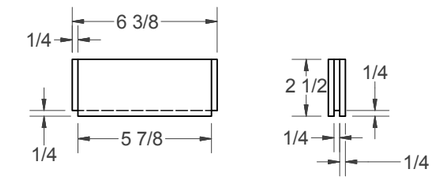

DOOR PANEL

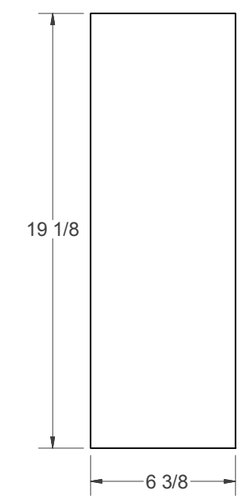

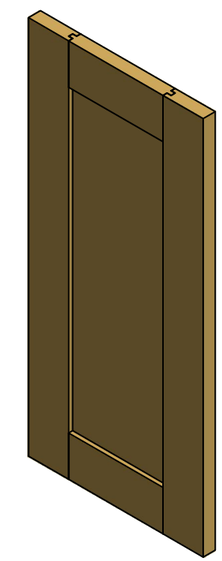

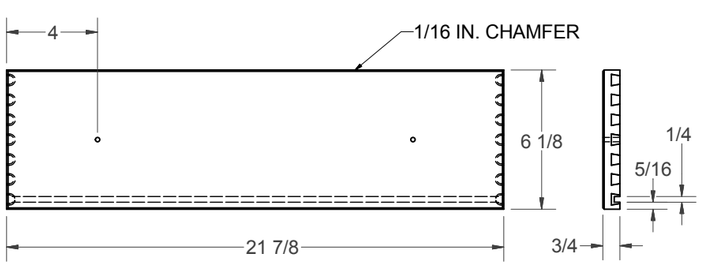

NOTE: DRAWER BACKS ARE THE SAME AS DRAWER FRONTS, ONLY 1/2 INCH THICK INSTEAD OF 3/4 INCH THICK

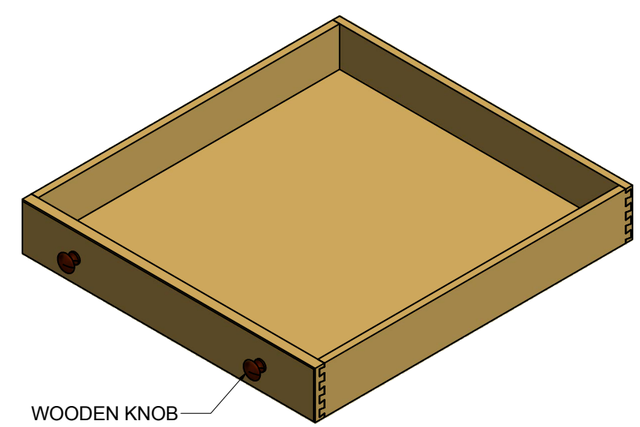

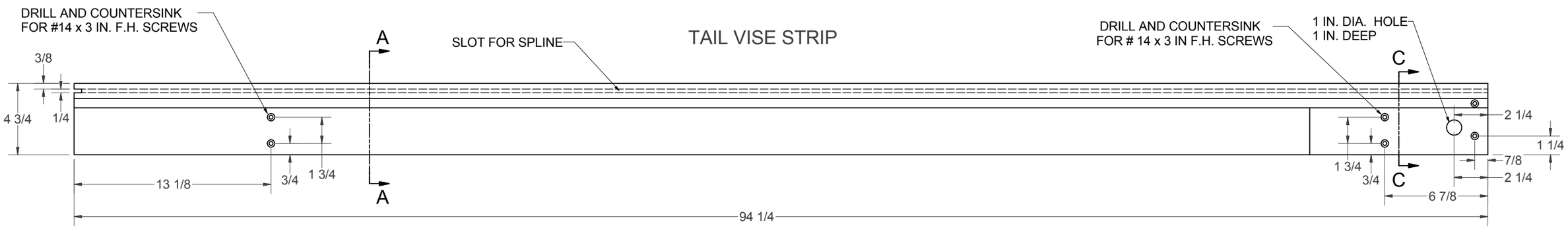

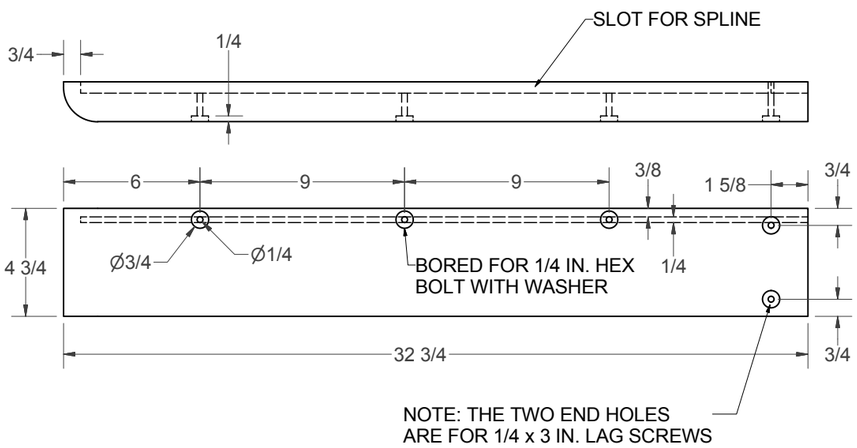

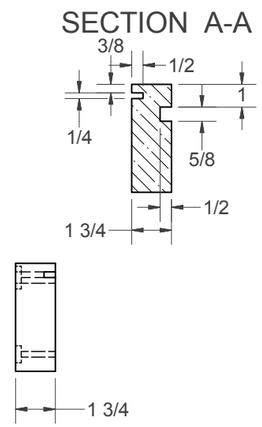

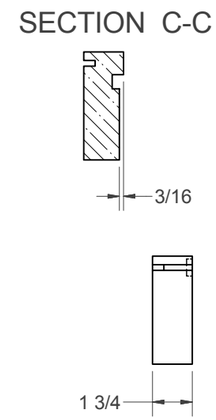

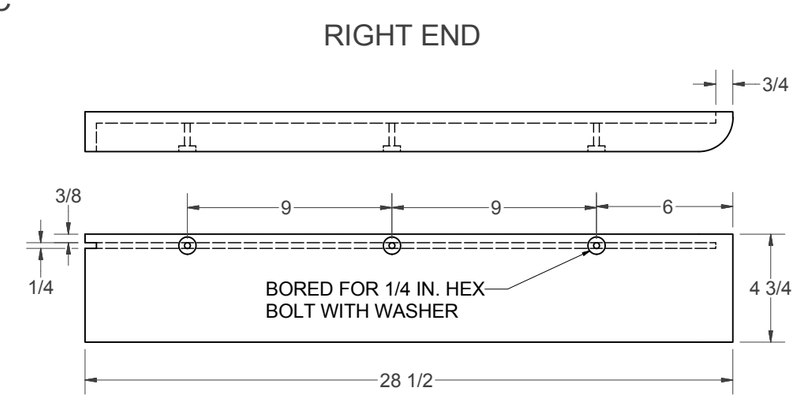

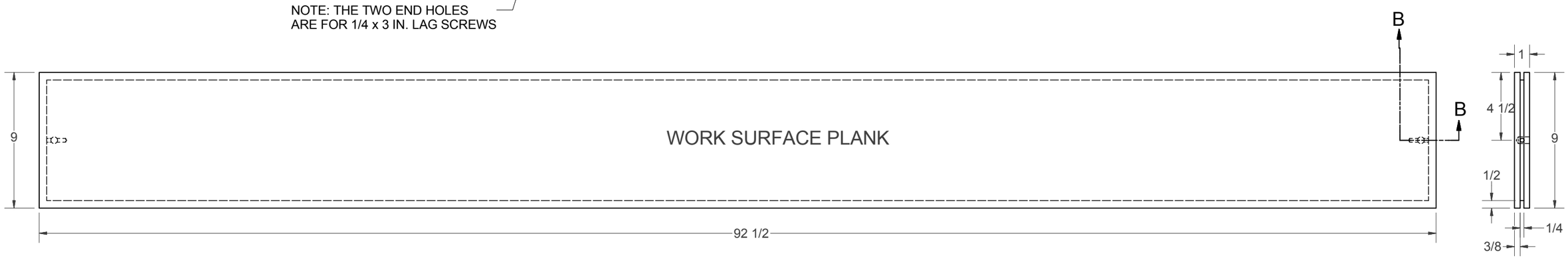

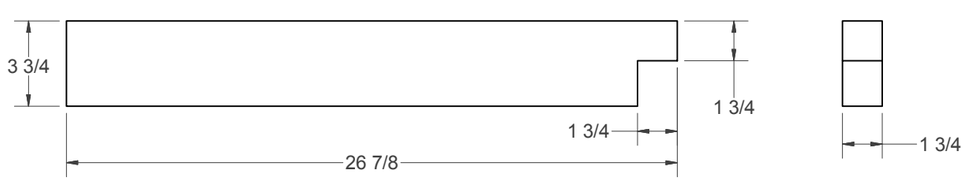

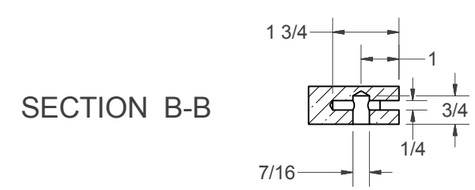

SN08416	CABINET-BASE WORKBENCH	WoodsmithPlans.com	7-14

BACK EDGE

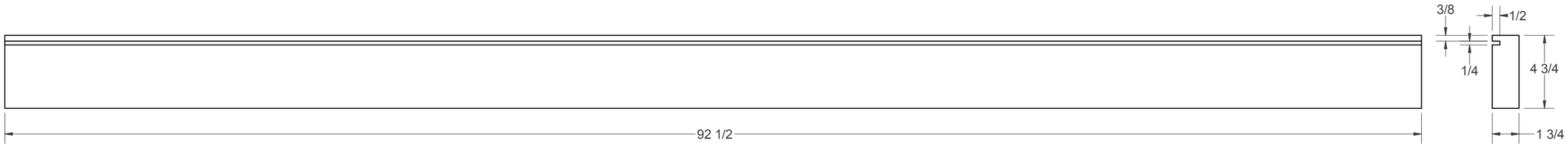

BACK EDGE FILLER

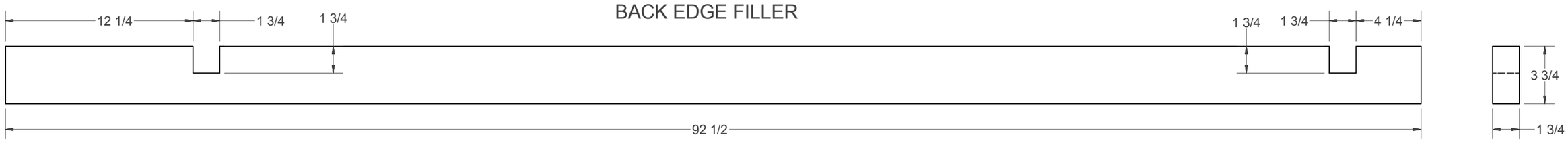

FRONT WORK SURFACE SPLINE (1/4 x 1)

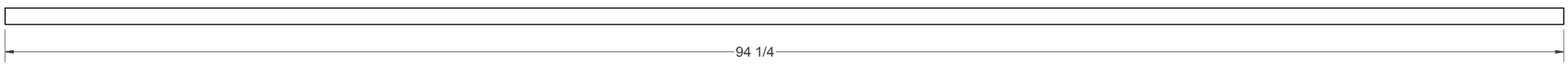

WORK SURFACE SPLINES (3) (1/4 x 1)

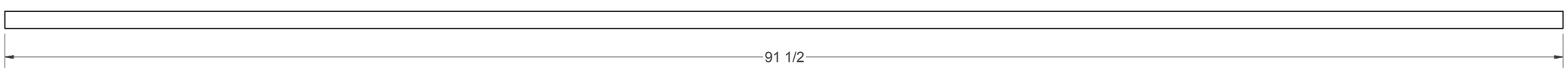

LEFT END SPLINE (1/4 x 1)

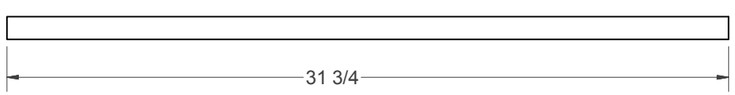

MOUNTING CLEAT STOP

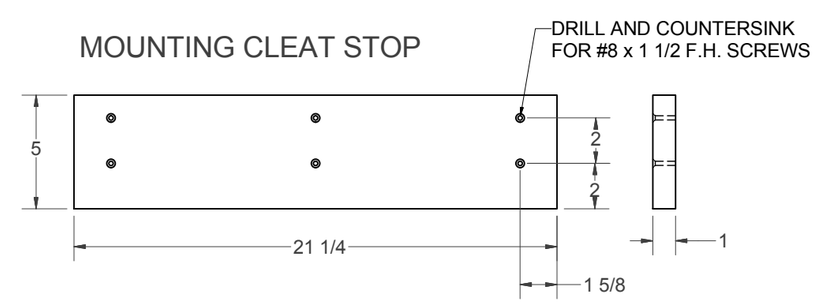

RIGHT END SPLINE (1/4 x 1)

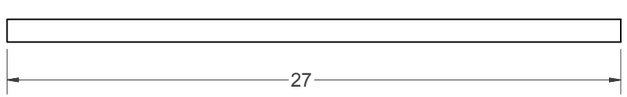

DOG ASSEMBLY SPLINE (5/8 x 1)

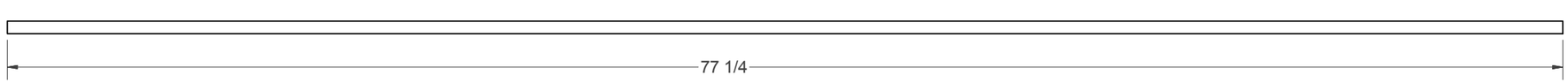

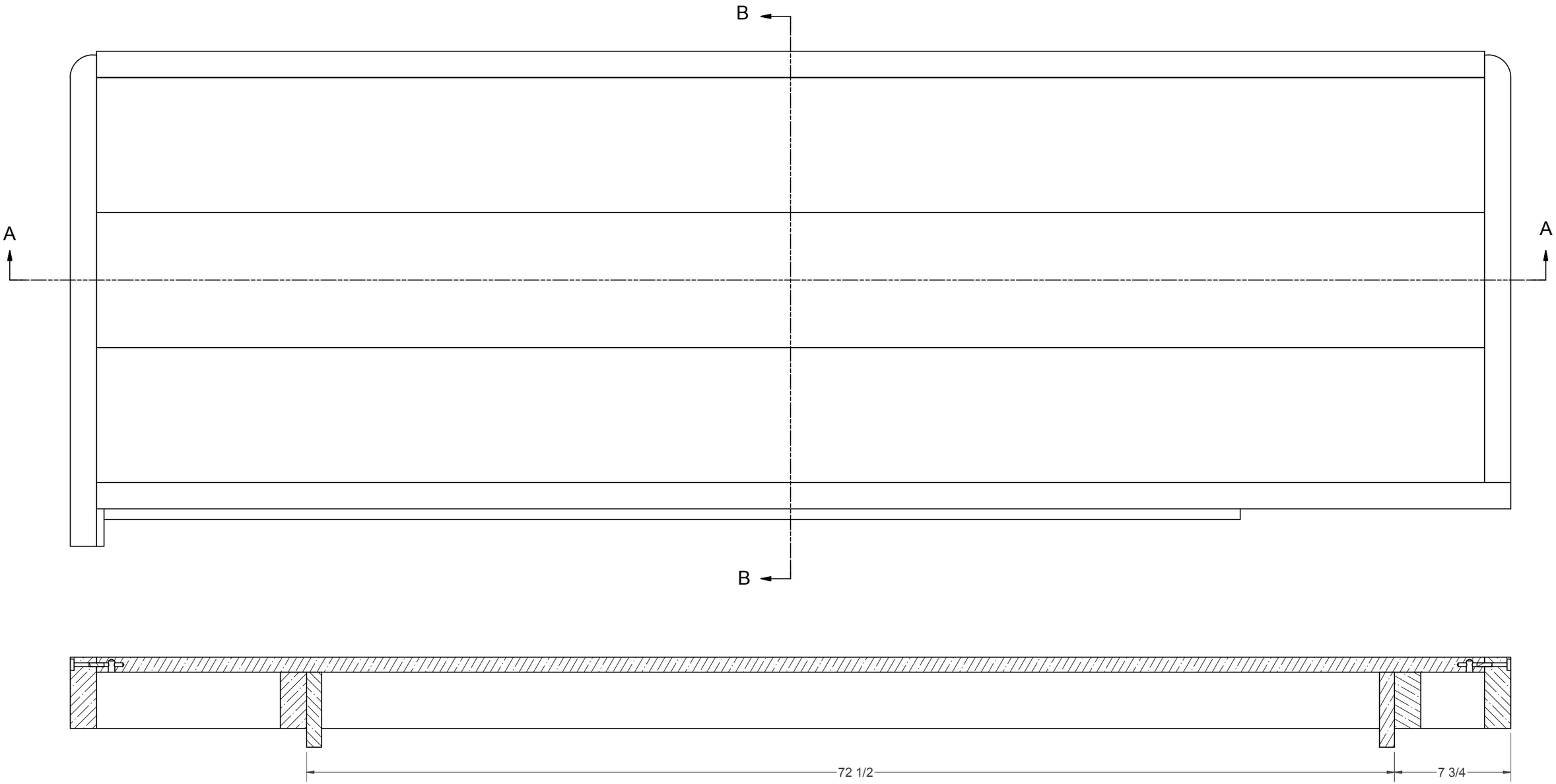

SECTION B-B

SECTION A-A

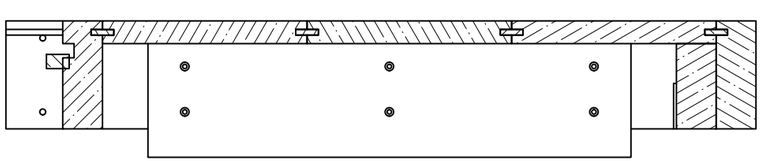

SN08416	CABINET-BASE WORKBENCH	WoodsmithPlans.com	9-14

DOG ROW

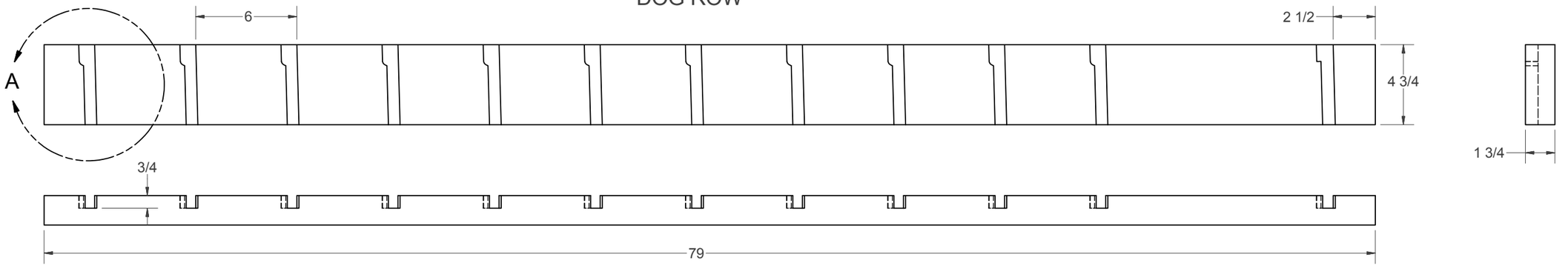

DOG ROW BACKER 1

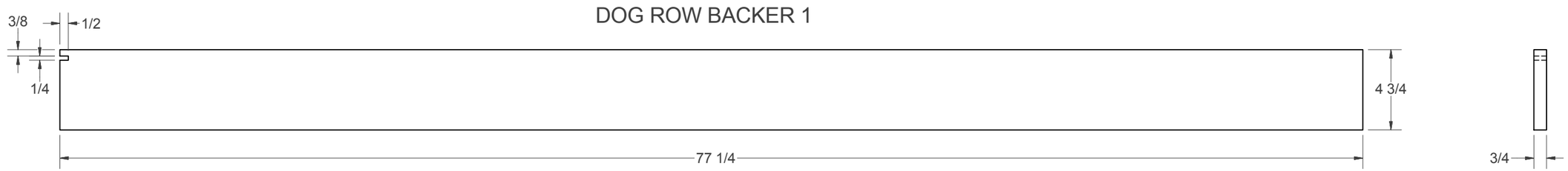

DOG ROW BACKER 2

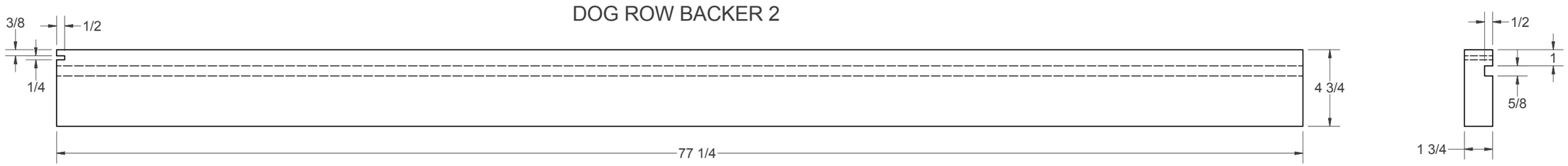

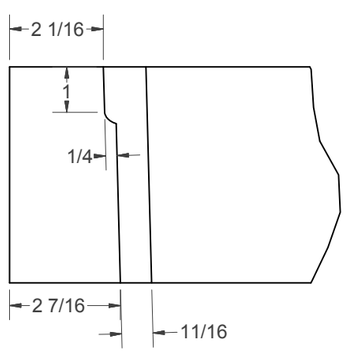

DETAIL A

SN08416	CABINET-BASE WORKBENCH	WoodsmithPlans.com	10-14

TAIL VISE FRONT

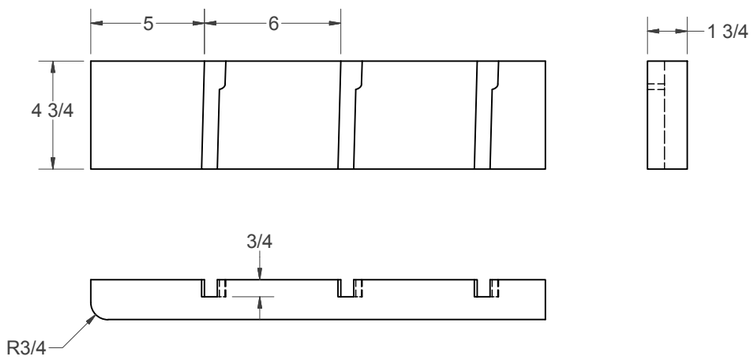

VISE TOP

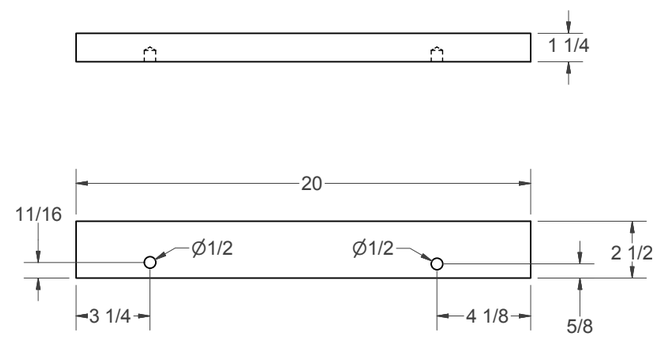

VISE BOTTOM

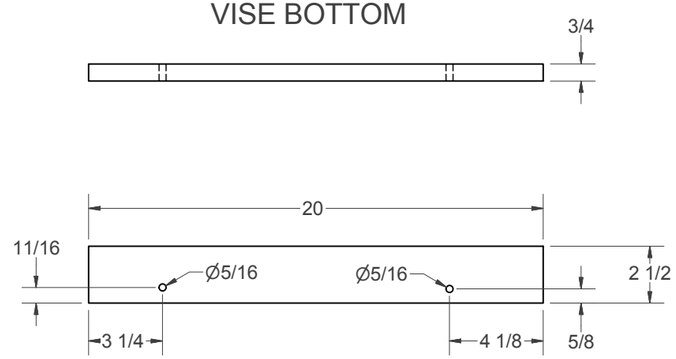

BACK FILLER

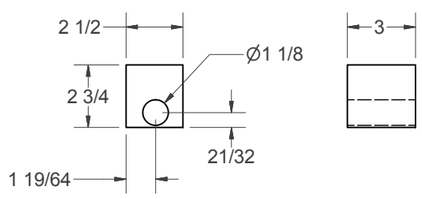

FRONT FILLER

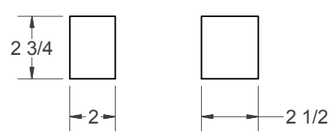

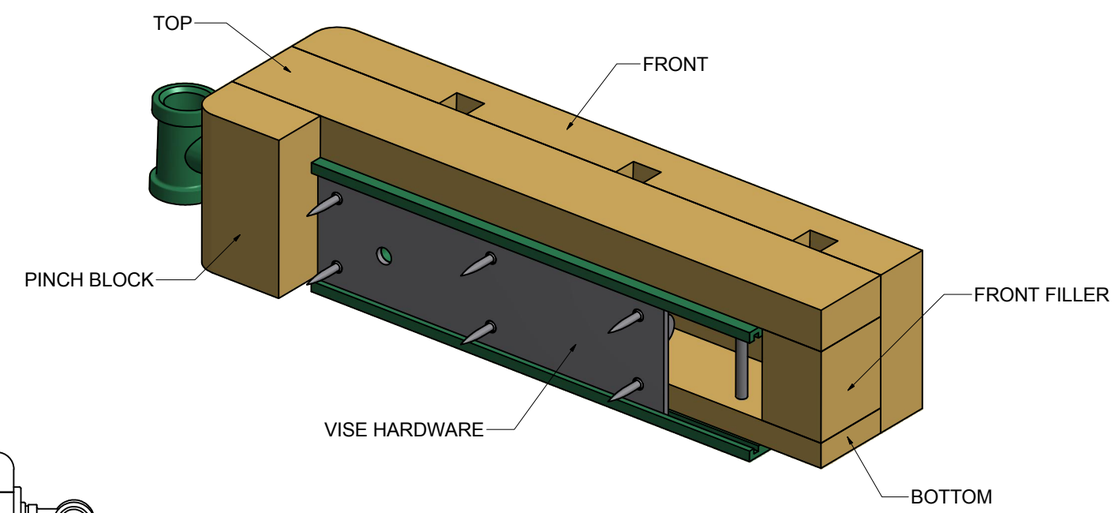

PINCH BLOCK

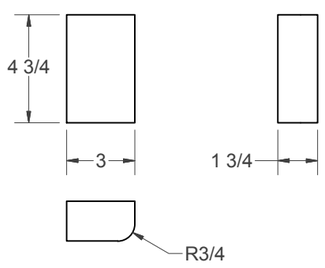

TOP VIEW

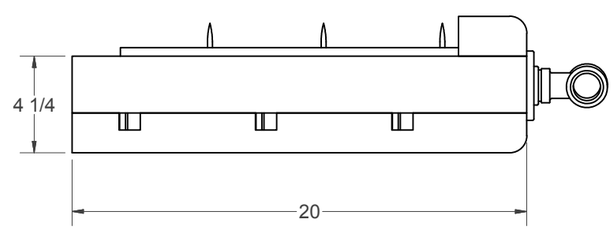

SN08416	CABINET-BASE WORKBENCH	WoodsmithPlans.com	11-14

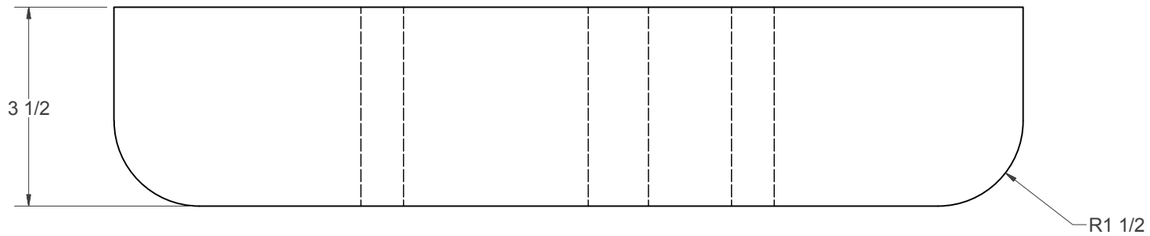

FACE VISE BLOCK

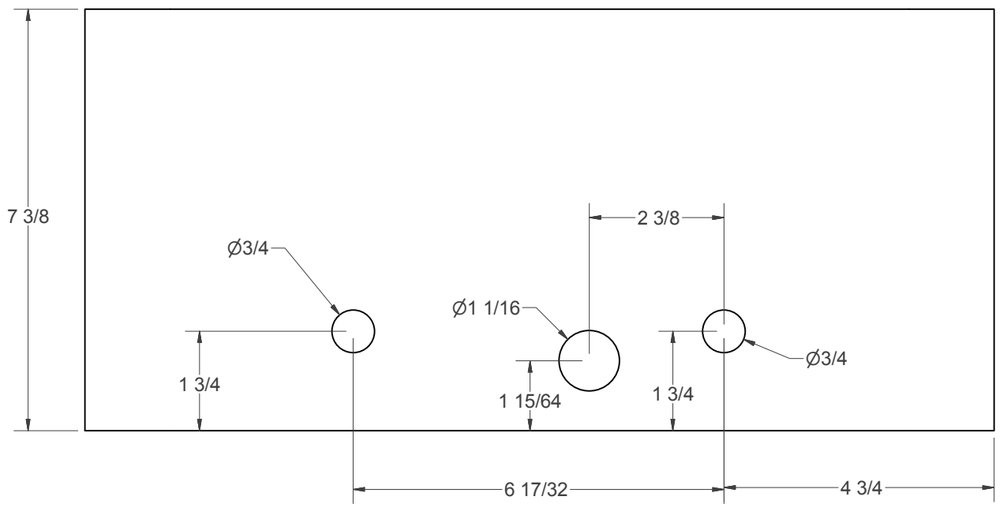

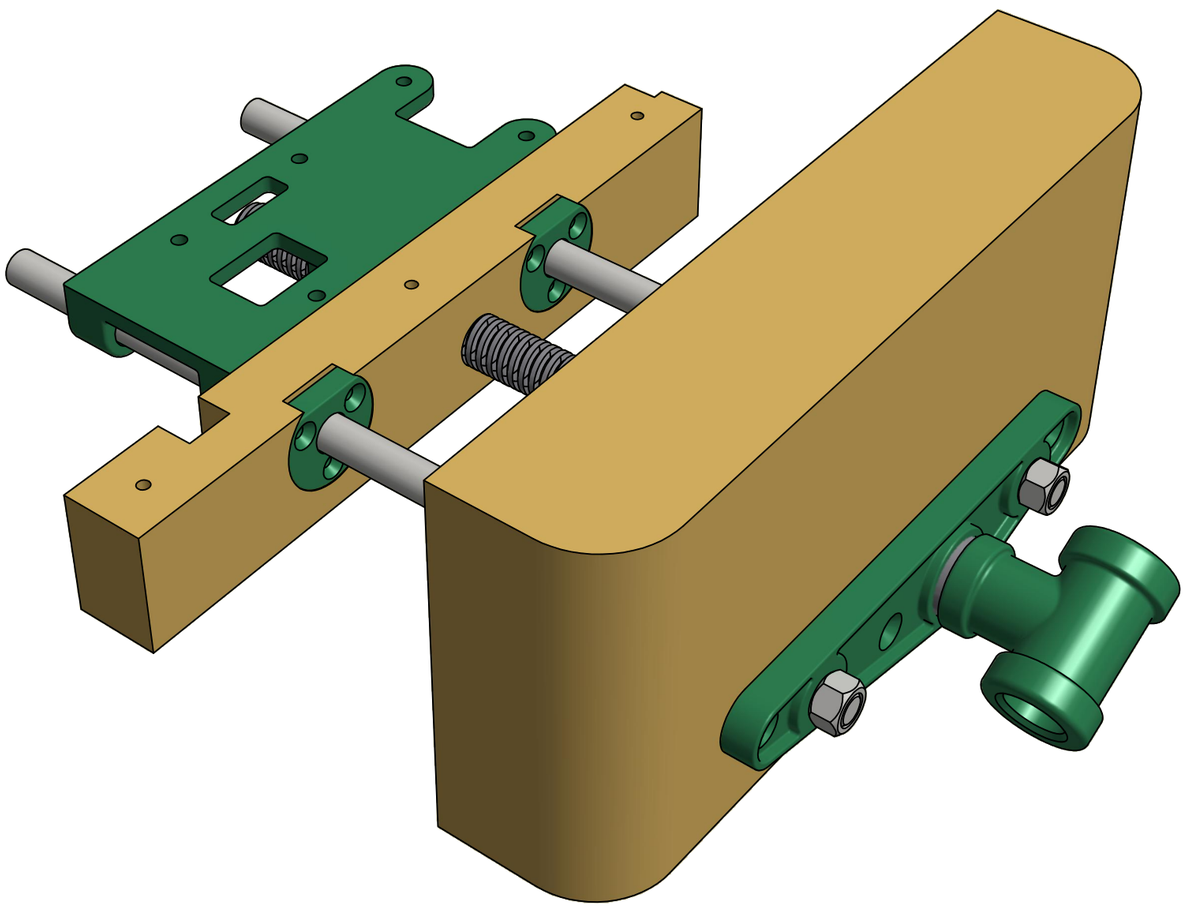

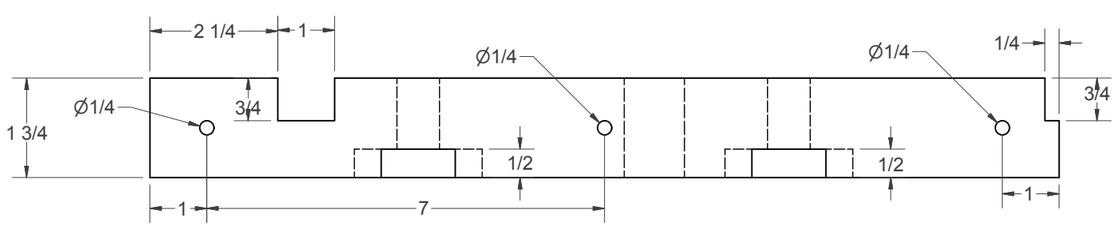

FILLER

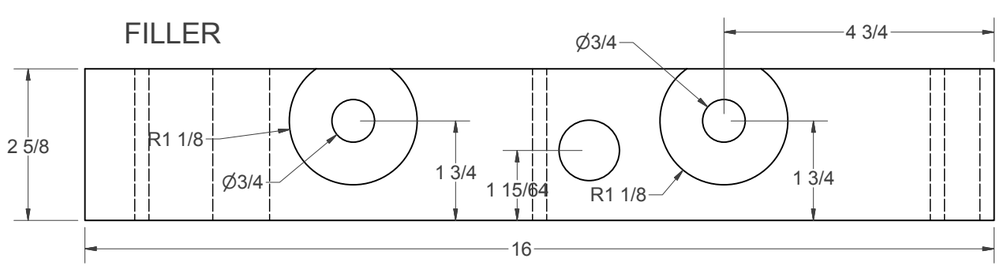

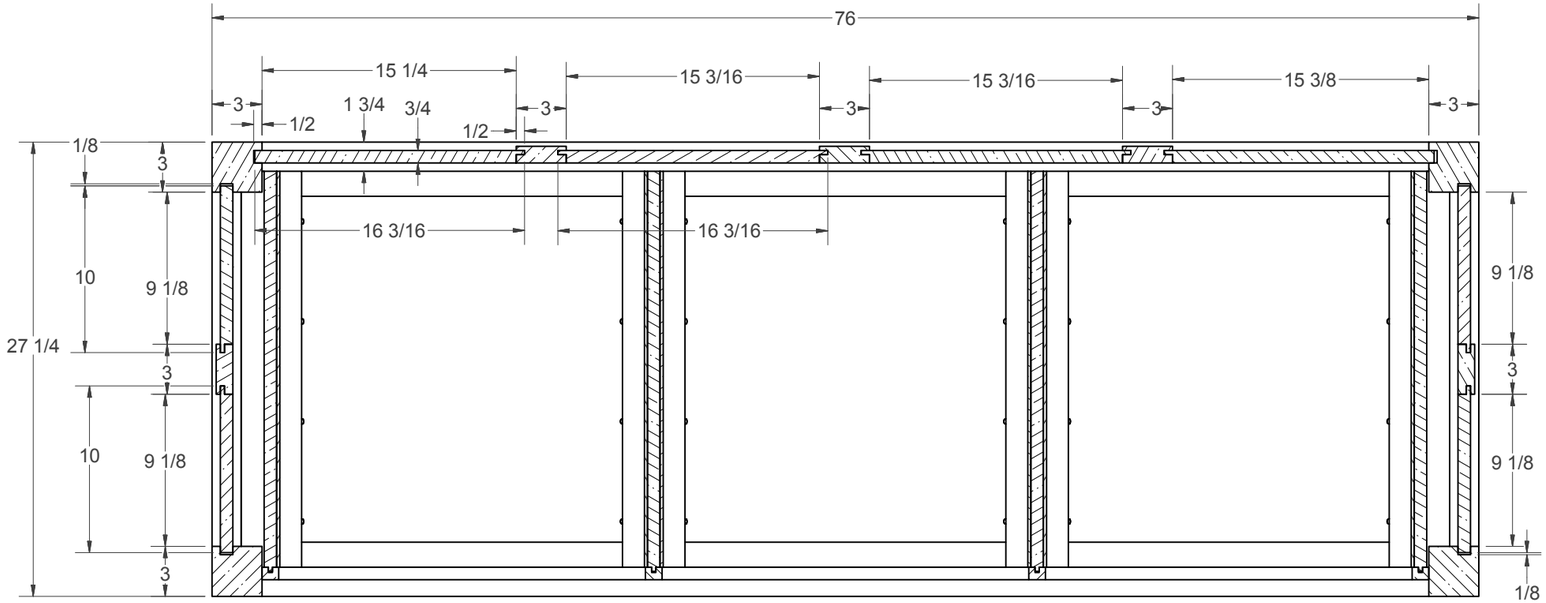

SECTION N-N
SCALE 0.22 : 1

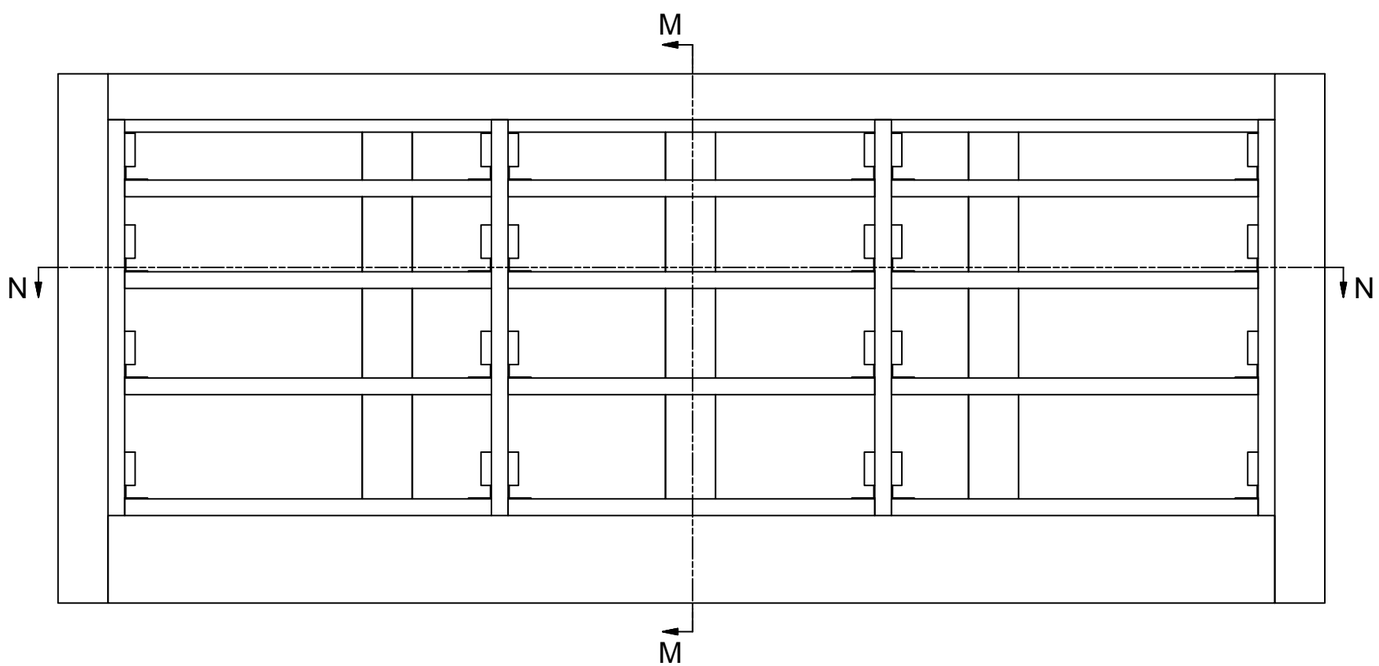

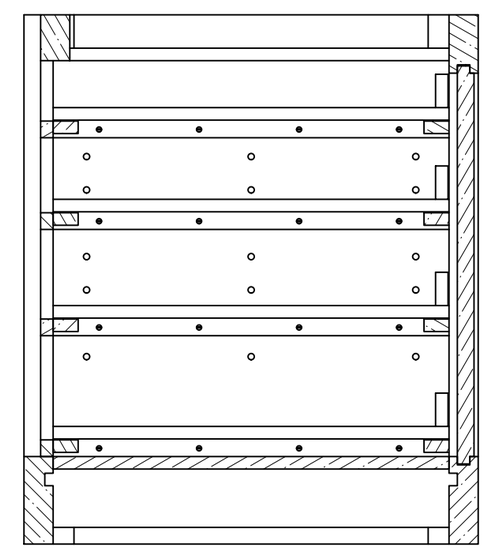

SECTION M-M
SCALE 0.22 : 1

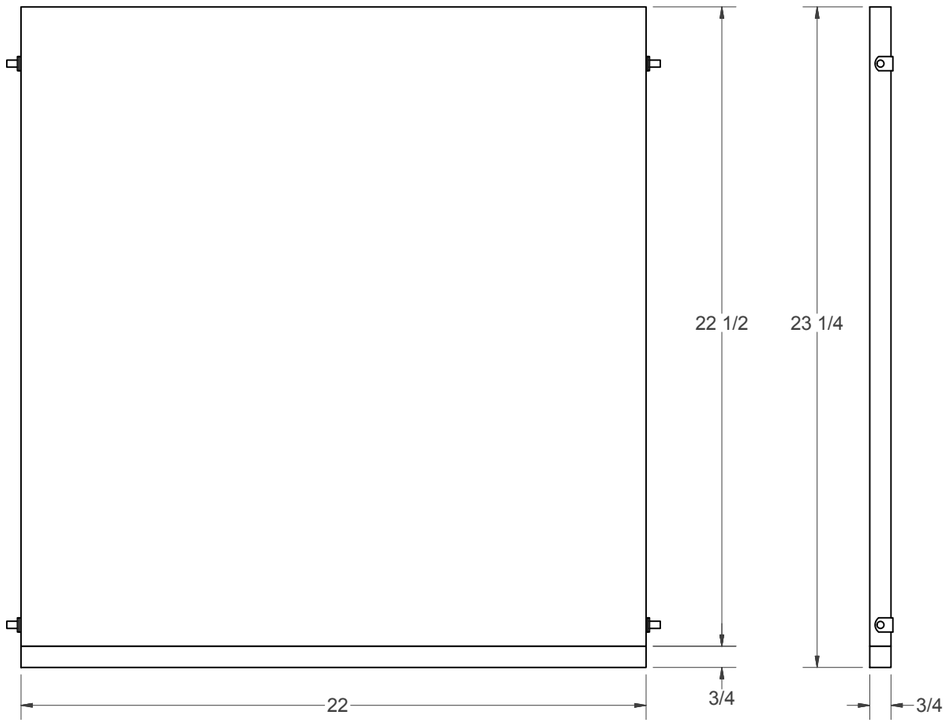

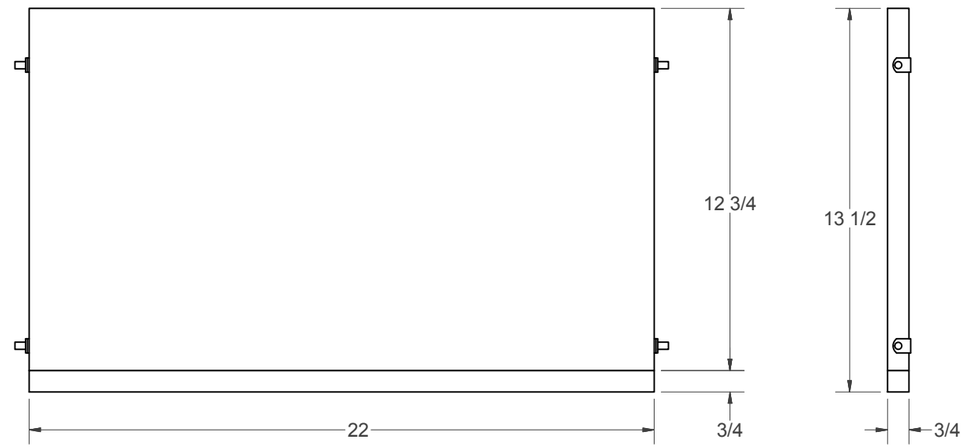

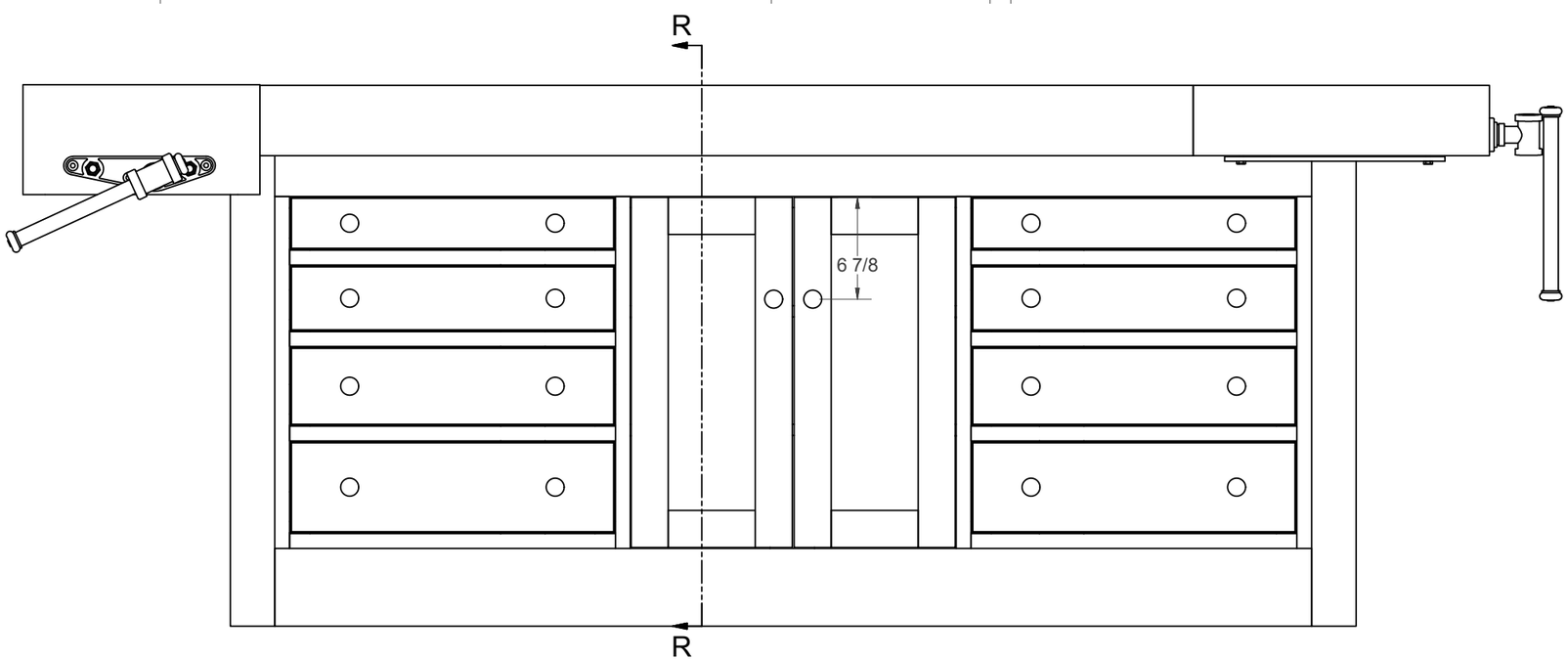

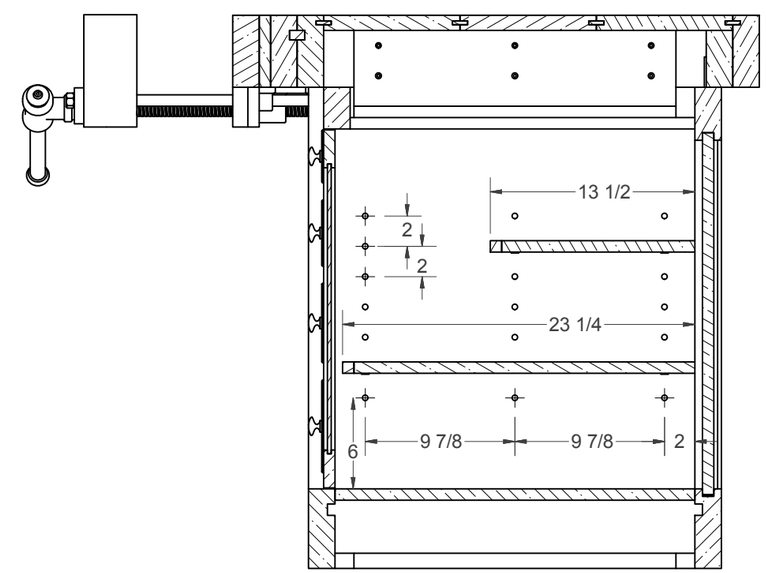

SECTION R-R
SCALE 1 / 5

SN08416	CABINET-BASE WORKBENCH	WoodsmithPlans.com	14-14