PRELIMINARY- NOT FOR CONSTRUCTION

BROADLAWNS MEDICAL FACILITY
PARKING LOT EXPANSION SITE PLAN

SHEET INDEX:

C0.1	COVER SHEET
C1.1-C1.2	EX. CONDITIONS & DEMO PLAN
C2.1-C2.2	LAYOUT PLAN
C2.3	BID ALT. LAYOUT PLAN
C3.1-C3.2	GRADING PLAN
C3.3	BID ALT. GRADING PLAN
C4.1-C4.2	UTILITY PLAN
C5.1-5.3	LANDSCAPE PLAN & DETAILS
C6.1-C6.4	DETAILS SHEET
C7.1-C7.2	EROSION CONTROL PLAN

PROPERTY DESCRIPTION:
TBD WITH PLATTING AND REZONING
SECTION 33 T79N R24W

ADDRESS:
1826 HICKMAN RD.
DES MOINES, IA 50314

OWNER/PREPARED FOR:
BROADLAWNS MEDICAL CENTER
1801 HICKMAN RD
DES MOINES, IA 50314
CONTACT: DENISE CUNDY
PHONE: 515-805-8940
EMAIL: DCUNDY@BROADLAWNS.ORG

ZONING:
P2 (PUBLIC, CIVIL AND INSTITUTIONAL DISTRICT)
CITY COMMISSION APPROVED ZONING AND LAND USE AMENDMENTS PER ORDINANCE NO. 16,564 ON JUNE 29TH, 2026.

PARKING:
PRINCIPAL USE: PARKING, NON-ACCESSORY - SURFACE PARKING LOT
EXISTING PARKING AT BROADLAWNS MAIN CAMPUS (1801 HICKMAN)
STANDARD STALLS: 1,070 STALLS (APPROX.)
ADA STALLS: 43 STALLS INCLUDING 7 VAN ACCESIBLE (APPROX.)

NEW PARKING PROVIDED: 234 STALLS

OPEN SPACE/IMPERVIOUS REQUIREMENTS:
TOTAL SITE AREA = 128,323 S.F. (2.94 ACRES)
REQUIRED OPEN SPACE = 25,664 S.F. (20.0%)
EXISTING OPEN SPACE = 128,323 S.F. (100.0%)
EXISTING IMPERVIOUS = 0 S.F. (0.0%)

PROPOSED OPEN SPACE = 35,983 S.F. (28.0%)
PROPOSED IMPERVIOUS = 92,340 S.F. (72.0%)

NET INCREASE IMPERVIOUS AREA = 92,340 S.F. (2.12 ACRES)

BENCHMARK:
POINT: CP #9003
N: 588490.96
E: 1601384.64
ELEV. = 114.63
DESCRIPTION: CUT "X" LOCATED DIRECTLY SOUTHEAST OF THE BUS STOP SHELTER ON THE NORTH SIDE OF HICKMAN SOUTH OF THE EXISTING BROADLAWNS MEDICAL FACILITY

POINT: CP #9003
N: 588502.76
E: 1601743.91
ELEV. = 121.62
DESCRIPTION: CUT "X" NEXT TO THE WATER MANHOLES ON THE NORTH SITE OF HICKMAN IN THE SOUTHEAST CORNER OF THE PROPERTY.

UTILITY MAPS PROVIDED BY:
1. ELECTRIC (MIDAMERICAN / 515-252-6972)
2. STORM AND SANITARY (CITY OF DES MOINES / 515-237-1359)
3. FIBER OPTIC (AUREON / 515-830-0445)
   (ICN / 515-725-4604)
   (MEDIACOM / 515-991-7388)
   (VERIZON / 469-886-4090)
4. GAS (MIDAMERICAN / 515-252-6972)
5. WATER (DMWW / 515-323-6244)

IOWA ONE CALL
1-800-292-8989
www.iowaonecall.com
811 Know what's below. Call before you dig.

UTILITY NOTE:
THE LOCATION OF THE UTILITIES INDICATED ON THE PLANS HAVE BEEN TAKEN FROM THE FIELD SURVEY, EXISTING PUBLIC RECORDS, AND PLANS PROVIDED BY OTHERS. SURFACE UTILITY LOCATIONS HAVE BEEN FIELD LOCATED BY BISHOP ENGINEERING, UNLESS OTHERWISE NOTED. ALL UNDERGROUND UTILITY LOCATIONS ARE APPROXIMATE LOCATIONS ONLY. BISHOP ENGINEERING DOES NOT GUARANTEE THE UNDERGROUND LOCATION OF ANY UTILITIES SHOWN. IT SHALL BE THE DUTY OF THE CONTRACTOR TO DETERMINE THE LOCATION AND DEPTH OF ANY UNDERGROUND UTILITIES SHOWN AND IF ANY ADDITIONAL UTILITIES, OTHER THAN THOSE SHOWN ON THE PLANS, MAY BE PRESENT. A REQUEST WAS MADE TO IOWA ONE CALL FOR UTILITY PROVIDERS TO VERIFY, LOCATE, AND MARK THEIR UTILITIES IN THE FIELD.

GENERAL NOTES:
1. ALL WORK SHALL BE DONE IN ACCORDANCE WITH SUDAS STANDARD SPECIFICATIONS AND ANY AND ALL CITY/COUNTY SUPPLEMENTAL SPECIFICATIONS. THE CITY OF DES MOINES MUST BE NOTIFIED BY ALL CONTRACTORS 48 HOURS PRIOR TO COMMENCING WORK.
2. IN EVENT OF A DISCREPANCY BETWEEN THE QUANTITY ESTIMATES AND THE DETAILED PLANS, THE DETAILED PLANS SHALL GOVERN.
3. THE CONTRACTOR SHALL BE RESPONSIBLE FOR THE LOCATION OF ALL UTILITIES. ANY DAMAGE TO SAID UTILITIES SHALL BE REPAIRED AT THE CONTRACTORS EXPENSE.
4. ALL WORK SHALL BE DONE IN ACCORDANCE WITH THE CURRENT O.S.H.A. CODES AND STANDARDS. NOTHING INDICATED ON THESE PLANS SHALL RELIEVE THE CONTRACTOR FROM COMPLYING WITH THE APPROPRIATE SAFETY REGULATIONS.
5. ALL NECESSARY CONSTRUCTION SIGNS, BARRICADES AND OTHER TRAFFIC CONTROL DEVICES REQUIRED DURING CONSTRUCTION WILL BE FURNISHED BY THE CONTRACTOR. SIGNS, BARRICADES AND OTHER TRAFFIC CONTROL DEVICES MUST BE IN CONFORMANCE WITH THE "MANUAL ON UNIFORM TRAFFIC CONTROL DEVICES FOR STREETS AND HIGHWAYS."
6. BISHOP ENGINEERING SHALL NOT BE LIABLE FOR ANY INJURIES THAT HAPPEN ON SITE. THIS SHALL INCLUDE BUT NOT BE LIMITED TO TRENCH COLLAPSES FROM VARYING SOIL CONDITIONS OR INJURIES CAUSED BY UNDERGROUND UTILITIES INCLUDING UTILITIES THAT ARE NOT SHOWN ON PLAN.
7. THE CONTRACTOR IS LIABLE FOR ALL DAMAGES TO PUBLIC OR PRIVATE PROPERTY CAUSED BY THEIR ACTION OR INACTION IN PROVIDING FOR STORM WATER FLOW DURING CONSTRUCTION. DO NOT RESTRICT FLOWS IN EXISTING DRAINAGE CHANNELS, STORM SEWER, OR FACILITIES.
8. THE CONTRACTOR SHALL SUBMIT TO THE ENGINEER A SCHEDULE FOR PERFORMANCE OF WORK ITEMS. THIS SCHEDULE SHALL BE PROVIDED BY THE CONTRACTOR AT THE PROJECT PRECONSTRUCTION CONFERENCE. NO WORK SHALL BEGIN UNTIL A SCHEDULE HAS BEEN SUBMITTED AND ACCEPTED. THE CONTRACTOR SHALL THEN PERFORM WORK TO CONFORM TO THE ACCEPTED SCHEDULE.
9. LABORATORY TESTS SHALL BE PERFORMED BY THE OWNER UNLESS OTHERWISE NOTED. THE CONTRACTOR SHALL PROVIDE SAMPLES OF MATERIAL REQUIRED FOR LABORATORY TESTS AND TESTING IN ACCORDANCE WITH THE URBAN STANDARD SPECIFICATIONS FOR PUBLIC IMPROVEMENTS.
10. SOIL IMPORT OR EXPORT ON THIS PROJECT SHALL BE CONSIDERED INCIDENTAL AND WILL NOT BE MEASURED OR PAID FOR SEPARATELY.
11. THE CONTRACTOR SHALL PROTECT ALL STRUCTURES NOT SHOWN AS REMOVALS ON THE PLANS.
12. THE CONTRACTOR SHALL OBTAIN ANY AND ALL NECESSARY PERMITS PRIOR TO ANY CONSTRUCTION. CONTRACTOR SHALL WORK WITH OWNER OR OWNERS REPRESENTATIVE ON ALL REQUIRED STORM WATER DISCHARGE PERMITS FROM THE IOWA DEPARTMENT OF NATURAL RESOURCES AND THE CITY OF DES MOINES.
13. GRADING AND EROSION CONTROL SHALL BE DONE IN ACCORDANCE WITH THE APPROVED GRADING PLAN, SWPPP, NPDES DOCUMENTS, AND IOWA DEPARTMENT OF NATURAL RESOURCES REQUIREMENTS.
14. THE CONTRACTOR SHALL PICK UP ANY DEBRIS SPILLED ONTO THE ADJACENT RIGHT OF WAY OR ABUTTING PROPERTIES AS THE RESULT OF CONSTRUCTION, AT THE END OF EACH WORK DAY.
15. THE CONTRACTOR IS RESPONSIBLE FOR THE PROMPT REMOVAL OF ALL MUD THAT HAS BEEN TRACKED OR WASHED UNTO ADJACENT PROPERTY OR RIGHT OF WAY UNTIL SUCH TIME THAT PERMANENT VEGETATION HAS BEEN ESTABLISHED.
16. DISPOSE OF ALL EXCESS MATERIALS AND TRASH IN ACCORDANCE WITH FEDERAL, STATE, AND LOCAL REQUIREMENTS. PROVIDE WASTE AREAS OR DISPOSAL SITES FOR EXCESS MATERIALS NOT DESIRABLE FOR INCORPORATION INTO THE PROJECT.

PAVING NOTES:
1. THE PAVING/ GRADING CONTRACTOR SHALL BACKFILL THE PAVING SLAB AND FINE GRADE THE RIGHT OF WAY AS SOON AFTER THE PAVING AS POSSIBLE. ALL AREAS SHALL BE SEEDED IN ACCORDANCE WITH CITY OF DES MOINES STANDARD SPECIFICATIONS AND THE CURRENT VERSION OF SUDAS.
2. SUBGRADE PREPARATION AND PAVEMENTS WILL BE CONSTRUCTED FOLLOWING RECOMMENDATIONS IN THE SOILS REPORT. APPROVED SOILS ENGINEER MUST SIGN OFF ON SUB BASE PRIOR TO ANY PAVEMENT BEING PLACED.
3. SEE DETAILS FOR ALL PAVEMENT THICKNESS.
4. ALL PEDESTRIAN WALKWAYS THAT UNLOAD INTO A VEHICLES TRAVELED PATH MUST HAVE A.D.A. DETECTABLE WARNING PANEL(S) AS PER A.D.A. REGULATIONS. PANEL TYPE & COLOR SHALL BE PER CITY STANDARD.
5. ALL WALKS, PARKING LOTS, HANDICAP PARKING, RAMPS, ETC. SHALL COMPLY WITH ALL A.D.A. AND CITY CODES. HANDICAP PARKING SIGNAGE IS REQUIRED FOR ALL HANDICAP STALLS AND SHALL BE CONSIDERED INCIDENTAL. IN EVENT OF A DISCREPANCY BETWEEN THE PLANS AND THE A.D.A./CITY CODES THE A.D.A./CITY CODES SHALL GOVERN. CONTRACTOR SHALL BE RESPONSIBLE FOR ENSURING A.D.A. CODES ARE MET.

UTILITY NOTES:
1. QUANTITY CALLOUTS ON PIPE LENGTHS ARE APPROXIMATE AND SHOULD BE USED FOR REFERENCE ONLY.
2. THE CONTRACTOR SHALL PROVIDE AS-BUILTS OF ALL UTILITIES, INCLUDING DEPTH AND LOCATION OF ALL SERVICES.
3. THE CONTRACTOR SHALL BE RESPONSIBLE FOR COORDINATION AND ALL COSTS ASSOCIATED WITH AS-BUILT TOPO OF DETENTION POND & DETENTION POND STORM SEWER. CONTRACTOR SHALL BE RESPONSIBLE FOR CONTACTING BISHOP ENGINEERING (DAVID BENTZ AT 515-276-0467) TO PERFORM SAID AS-BUILT SURVEY. IF DETENTION PONDS HAVE BEEN GRADED INCORRECTLY, CONTRACTOR SHALL BE RESPONSIBLE FOR ALL SUBSEQUENT AS-BUILT TOPO SURVEYS UNTIL ISSUES HAVE BEEN RECTIFIED.
4. THE CONTRACTOR SHALL COORDINATE THE ADJUSTMENT OF ANY AND ALL EXISTING AND PROPOSED UTILITIES TO PROPOSED GRADES. EXISTING UTILITIES SHALL BE RAISED OR LOWERED IN ACCORDANCE WITH THE UTILITY OWNER REQUIREMENTS. ANY NECESSARY ADJUSTMENTS SHALL BE CONSIDERED INCIDENTAL TO CONSTRUCTION.
5. ACTIVE EXISTING FIELD TILES ENCOUNTERED DURING CONSTRUCTION SHALL BE REPAIRED, REROUTED, OR CONNECTED TO PUBLIC OR PRIVATE STORM SEWER TO REMAIN IN SERVICE.
6. ALL PROPOSED RCP STORM SEWER PIPE JOINTS SHALL BE FABRIC WRAPPED AND THE LAST 3 PIPE SECTIONS ON THE APRON SHALL BE TIED WITH RF-14 TYPE II CONNECTORS. ALL APRONS SHALL HAVE A STANDARD FOOTING AND TRASH GUARD.
7. ALL RIP RAP CALLED OUT ON PLANS SHALL BE UNDERLAIN WITH ENGINEERING FABRIC.
8. SANITARY SEWER SERVICE CONNECTIONS SHALL BE PLACED AT A SLOPE OF NO LESS THAN 2%. SERVICES SHALL MAINTAIN 18" OF VERTICAL SEPARATION FROM THE WATERMAIN WITH 18" OF COMPACTED LOW PERMEABILITY SOIL BETWEEN THE UTILITIES WITHIN 10' OF THE CROSSING.
9. MANDREL AND PRESSURE TESTS SHALL BE REQUIRED FOR ALL PROPOSED SANITARY LINES. TELEVISING OF THE SANITARY SEWER SYSTEM SHALL BE COMPLETED PRIOR TO PAVING UNLESS OTHERWISE APPROVED BY JURISDICTION.
10. WATERMAINS SHALL BE C-900. SIZE OF WATERMAIN AS SHOWN ON PLANS.
11. THRUST BLOCKS SHALL BE INSTALLED AS REQUIRED AND SHALL BE CONSIDERED INCIDENTAL TO WATERMAIN CONSTRUCTION.
12. PROPOSED WATERMAIN SHALL BE PRESSURE TESTED, BACTERIA TESTED AND CHLORINATED. THE FILLING OF THE WATER MAIN SHALL BE DONE BY THE CITY OF DES MOINES.
13. TRACER WIRE SHALL BE ADDED TO ALL WATER MAIN, AND BROUGHT TO THE SURFACE AT EVERY HYDRANT.
14. ALL HYDRANTS WILL IMMEDIATELY BE COVERED WITH A BLACK PLASTIC BAG (OR EQUIVALENT) ONCE THE HYDRANT IS INSTALLED. THE CITY OF DES MOINES WILL NOTIFY THE CONTRACTOR WHEN THE BAGS CAN BE REMOVED.
15. THE MINIMUM HYDRANT LEAD SHALL BE 3.5 FEET.

COPYRIGHT 2026 BISHOP ENGINEERING. THIS DOCUMENT AND THE INFORMATION CONTAINED MAY NOT BE REPRODUCED OR EXCERPTED WITHOUT THE EXPRESS WRITTEN PERMISSION OF BISHOP ENGINEERING. UNAUTHORIZED COPYING OR DISCLOSURE OF CONSTRUCTION USE ARE PROHIBITED BY COPYRIGHT LAW.

UTILITY CONFLICT NOTES:
1. UTILITY CONFLICTS MAY EXIST ACROSS THE SITE WITH NEW UTILITIES, GRADING, PAVING ETC. MOST UTILITY CONFLICTS HAVE BEEN CALLED OUT FOR CONTRACTOR CONVENIENCE.
2. CONTRACTOR IS RESPONSIBLE FOR ALL UTILITY CONFLICTS THAT ARE EITHER CALLED OUT ON THE PLANS OR THAT CAN BE SEEN ON THE PLANS BETWEEN AN EXISTING UTILITY AND PROPOSED CONSTRUCTION

WETLAND NOTES:
1. BISHOP ENGINEERING DOES NOT PERFORM WETLAND STUDIES OR WETLAND MITIGATION. IT IS THE OWNER'S RESPONSIBILITY TO DETERMINE IF ANY WETLANDS ARE LOCATED ON THE PROJECT SITE AND PERFORM ANY NECESSARY MITIGATION PRIOR TO THE COMMENCEMENT OF CONSTRUCTION ACTIVITIES.

SURVEY NOTES:
1. SURVEY WORK WAS COMPLETED BY BISHOP ON 04-11-2025.

CITY OF DES MOINES GENERAL NOTES:
1. ALL WORK IN THE CITY RIGHT-OF-WAY SHALL BE DONE IN ACCORDANCE WITH SUDAS AND THE CITY OF DES MOINES GENERAL SUPPLEMENTAL SPECIFICATIONS TO SUDAS EFFECTIVE AT THE TIME OF PLAN APPROVAL.
2. A GRADING PERMIT WILL BE REQUIRED PRIOR TO COMMENCEMENT OF SITE WORK. PER CITY CODE SEC. 42-182, A CERTIFICATE OF COMPLETION WILL BE REQUIRED TO BE COMPLETED BY THE APPLICANT'S ENGINEER TO CERTIFY THE GRADING WORK ON SITE. THE IMPACTED AREA OF THE PROJECT EXCEEDS ONE ACRE, SO THE OWNER/DEVELOPER MUST APPLY FOR A NPDES GENERAL PERMIT NO. 2 THROUGH THE IDNR.
3. ALL RETAINING WALLS THAT EXCEED FOUR FEET IN HEIGHT AS MEASURED FROM BASE OF FOOTING TO TOP OF WALL REQUIRES A SEPARATE BUILDING PERMIT WITH DESIGN AND CERTIFICATION BY A LICENSED PROFESSIONAL ENGINEER ACCOMPANIED BY STRUCTURAL CALCULATIONS.
4. PRIVATE WATER AND SEWER SERVICES MUST MEET UNIFORM PLUMBING CODE (UPC) AND ALL CITY OF DES MOINES AMENDMENTS TO UPC. DEVELOPER / CONTRACTOR IS RESPONSIBLE FOR VERIFYING PIPE MATERIAL REQUIREMENTS PRIOR TO CONSTRUCTION.
5. A SIDWALK / DRIVE APPROACH PERMIT IS REQUIRED.
6. A PLUMBING PERMIT AND RIGHT-OF-WAY PERMIT ARE BOTH REQUIRED FOR THE PROPOSED CONNECTIONS TO THE PUBLIC STORM SEWER.
7. THIS SITE SHALL BE MAINTAINED IN COMPLIANCE WITH ALL CITY CODE APPLICABLE ON THE DATE OF SITE PLAN APPROVAL.
8. MECHANICAL EQUIPMENT SHALL NOT BE LOCATED IN THE FRONT YARD OR STREET SIDE YARD AND SHALL BE SCREENED FROM VIEW FROM ANY PUBLIC WAY WITH LANDSCAPING, FENCING, OR WALLS CONSISTENT WITH THE BUILDING DESIGN, COLORS, AND MATERIALS.
9. ANY AMENDMENTS OR CHANGES TO THE PROJECT SITE THAT DO NOT MEET WHAT IS SHOWN ON THE SITE PLAN NEED TO BE APPROVED WITH THE PERMIT AND DEVELOPMENT CENTER PRIOR TO INSTALLATION/CONSTRUCTION.
10. LIGHTING MUST BE LOW GLARE CUT OFF TYPE FIXTURES TO REDUCE THE GLARE OF LIGHT POLLUTION ON SURROUNDING PROPERTIES.
11. THE REQUIRED LANDSCAPING, BOTH EXISTING AND PROPOSED, SHALL BE MAINTAINED FOR THE LIFE OF THE CERTIFICATE OF OCCUPANCY.
12. ALL DISTURBED AREAS SHOULD BE RESTORED BY SEEDING OR SODDING.
13. ALL PLANTING BEDS SHALL INCLUDE NON-LIVING PERMEABLE MATERIALS SUCH AS MULCH, AND NOT INCLUDING ROCK.

PLANNING AND ZONING NOTES:
THE FOLLOWING ZONING CONDITIONS EXIST ON THE PROPERTY PER ORDINANCE NO. 16,564:
1. ANY FUTURE OFF-STREET PARKING LOT CONSTRUCTED ON THIS PROPERTY SHALL BE SUBJECT TO PROVISION OF AN ENHANCED PEDESTRIAN CROSSING ON HICKMAN ROAD TO THE SATISFACTION OF THE CITY ENGINEER.
2. ANY FUTURE OFF-STREET PARKING LOT CONSTRUCTED ON THIS PROPERTY SHALL HAVE ACCESS DRIVEWAYS IN LOCATIONS DEEMED APPROPRIATE TO THE SATISFACTION OF THE CITY ENGINEER.

BOARD OF ADJUSTMENT NOTES:
ZONING BOARD OF ADJUSTMENT MEETING DATE: JULY 22, 2026
DOCKET: ZBOA-2026-000018
APPEAL GRANTED: CONDITIONAL USE FOR A "NON-ACCESSORY PARKING: SURFACE PARKING LOT" IN A "P2" PUBLIC, CIVIC, AND INSTITUTIONAL DISTRICT.
CONDITIONS OF APPROVAL:
1. ANY "NON-ACCESSORY PARKING: SURFACE PARKING LOT" SHALL ONLY BE PERMITTED IN TANDEM WITH A MEDICAL CENTER USE LOCATED IN THE VICINITY OF 1801 HICKMAN ROAD.
2. ANY CONSTRUCTION ON THE SITE SHALL BE IN ACCORDANCE WITH ALL APPLICABLE SITE PLAN REGULATIONS AND BUILDING AND FIRE CODES, WITH ISSUANCE OF ANY NECESSARY ELECTRICAL AND BUILDING PERMITS BY THE CITY'S PERMIT AND DEVELOPMENT CENTER.
3. IF THE ZONING ENFORCEMENT OFFICER DETERMINES AT ANY TIME THAT THE OPERATION OF EITHER USE BECOMES A NUISANCE OR EXHIBITS A PATTERN OF VIOLATING THE CONDITIONS SET FORTH IN THE CONDITIONAL USE OR THE REQUIREMENTS CONTAINED IN CITY CODE SECTION 134-3.8.1, THE ZONING ENFORCEMENT OFFICER MAY APPLY TO THE BOARD TO RECONSIDER THE ISSUANCE OF THE CONDITIONAL USES.

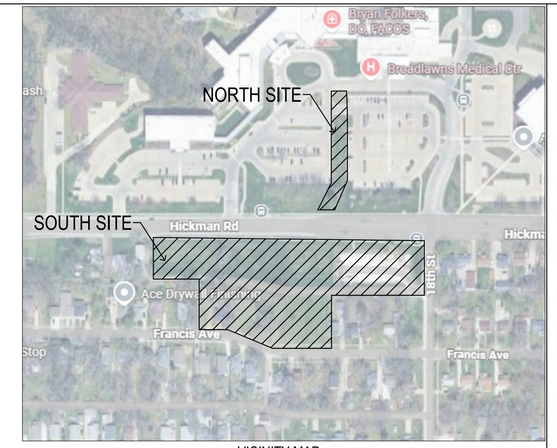

VICINITY MAP
SCALE: NOT TO SCALE

LEGEND

SAN	SANITARY SEWER		ELECTRIC VAULT
ST	STORM SEWER		TRANSFORMER POLE
W	WATER LINE		TRANSFORMER POLE
G	GAS LINE		LIGHT POLE
U/E	UNDERGROUND ELECTRIC		ELECTRIC JUNCTION BOX
O/E	OVERHEAD ELECTRIC		ELECTRIC PANEL
TELE	TELEPHONE LINE		TRANSFORMER
F/O	FIBER OPTIC		GROUND LIGHT
CATV	CABLE TV		GUY WIRE
	STORM MANHOLE		ELECTRIC HANDHOLE
	CURB INTAKE		GAS METER
	SURFACE INTAKE		GAS VALVE
	FLARED END SECTION		AIR CONDITIONING UNIT
	ROOF DRAIN		TELEPHONE RISER
	DOWNSPOUT		TELEPHONE VAULT
	SANITARY MANHOLE		TELEPHONE MANHOLE
	CLEANOUT		TRAFFIC SIGNAL MANHOLE
	FIRE HYDRANT		FIBER OPTIC MANHOLE
	SPRINKLER		FIBER OPTIC RISER
	IRRIGATION CONTROL VALVE		FIBER OPTIC VAULT
	WATER MANHOLE		CABLE TV RISER
	WELL		SIGN
	WATER VALVE		BOLLARDS
	WATER SHUT OFF		DENOTES NUMBER OF PARKING STALLS
	YARD HYDRANT		PROPERTY CORNER - FOUND AS NOTED
	FLAGPOLE		PROPERTY CORNER- PLACED 5/8" IRON ROD WITH YELLOW PLASTIC CAP ID # 14775 OR AS NOTED
	ELECTRIC MANHOLE		SECTION CORNER - FOUND AS NOTED
	ELECTRIC METER		SITE CONTROL POINT - MONUMENT AS NOTED
	ELECTRIC RISER		

ABBREVIATIONS:

AC	ACRES
ASPH	ASPHALT
BK	BOOK
CONC	CONCRETE
D	DEEDED DISTANCE
EX	EXISTING
ENCL	ENCLOSURE
FF	FINISHED FLOOR
FL	FLOW LINE
FRAC	FRACTIONAL
M	MEASURED DISTANCE
MH	MANHOLE
OPC	ORANGE PLASTIC CAP
P	PLATTED DISTANCE
PG	PAGE
POB	POINT OF BEGINNING
POC	POINT OF COMMENCEMENT
PRA	PREVIOUSLY RECORDED AS
PUE	PUBLIC UTILITY EASEMENT
ROW	RIGHT OF WAY
RPC	RED PLASTIC CAP
SF	SQUARE FEET
SAN	SANITARY
TYP	TYPICAL
YPC	YELLOW PLASTIC CAP
N	NORTH
S	SOUTH
E	EAST
W	WEST

SITE PLAN APPROVAL:
☐ APPROVED ☐ APPROVED WITH CONDITIONS – SEE EXHIBIT "A"

IN ACCORDANCE WITH SECTION 135-9, 2019 DES MOINES MUNICIPAL CODE, AS AMENDED.

NO CHANGES TO THIS PLAN UNLESS APPROVED IN WRITING FROM THE DEVELOPMENT SERVICES DIRECTOR.

DEVELOPMENT SERVICES DIRECTOR: _____ DATE: _____

LICENSED PROFESSIONAL ENGINEER
DAVID B. BENTZ
17143
IOWA

I HEREBY CERTIFY THAT THIS ENGINEERING DOCUMENT WAS PREPARED BY ME OR UNDER MY DIRECT PERSONAL SUPERVISION AND THAT I AM A DULY LICENSED PROFESSIONAL ENGINEER UNDER THE LAWS OF THE STATE OF IOWA.

SIGNED: _____ DATE: _____
DAVID B. BENTZ, PE. 17143
LICENSE RENEWAL DATE: DEC. 31, 2027
PAGES OR SHEETS COVERED BY THIS SEAL: C0.1 - C7.1

BISHOP ENGINEERING +
3501 104th Street, Urbandale, IA 50322 Ph: 515-276-0467

SITE PLAN
BROADLAWNS PARKING LOT EXPANSION
1826 HICKMAN ROAD
DES MOINES, IA 50314

REFERENCE NUMBER:

DRAWN BY: LCR

REVISION DATE:
1ST CITY SUB: 2026-05-13
2ND CITY SUB: 2026-07-27
90% CD SET: 2026-08-25
100% BID SET: 2026-09-10

PROJECT NUMBER: 240308-1

SHEET NAME: COVER SHEET

SHEET NUMBER: C0.1

PRELIMINARY- NOT FOR CONSTRUCTION

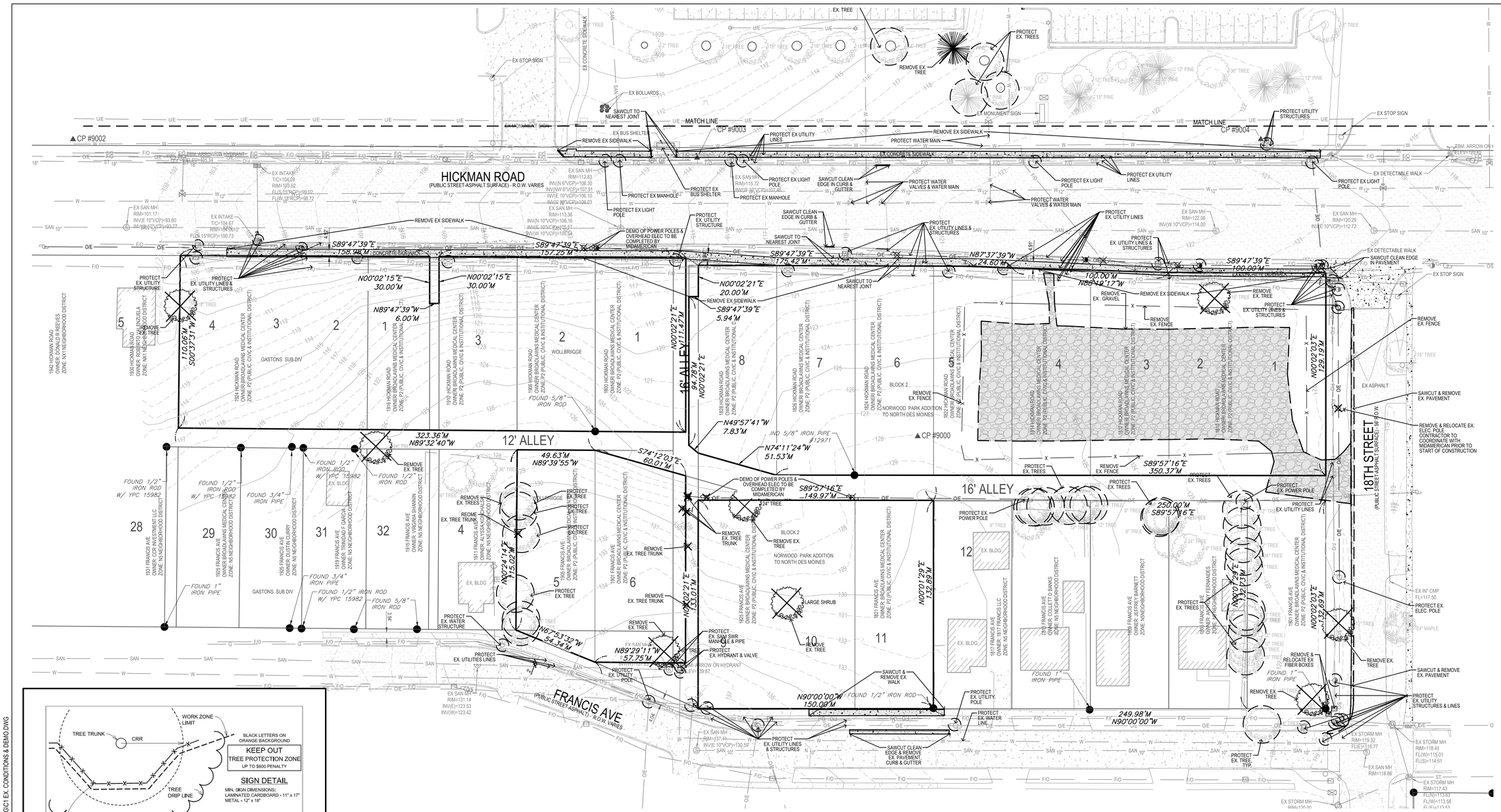

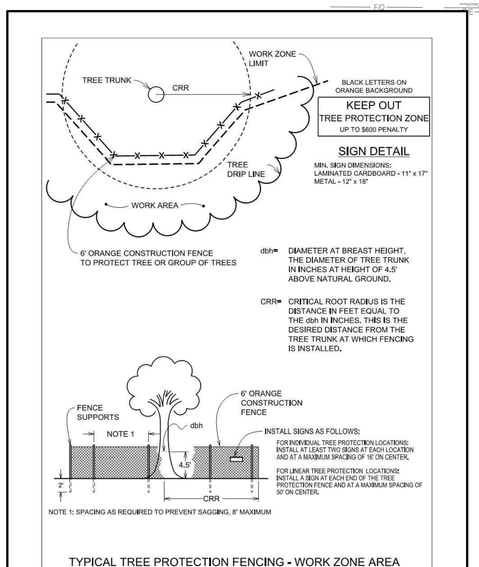

TYPICAL TREE PROTECTION FENCING - WORK ZONE AREA

FIGURE TP-1

Supplemental Specifications for Tree Protection — Page 5 of 6

TREE PROTECTION NOTES:

1. TREE PROTECTION FENCING SHALL BE INSTALLED PRIOR TO THE COMMENCEMENT OF ANY SITE WORK AND WILL BE MAINTAINED THROUGHOUT THE DURATION OF THE PROJECT.
2. NO MATERIAL STORAGE, EQUIPMENT STAGING, VEHICLE ACCESS, SOIL STOCKPILING, OR OTHER CONSTRUCTION ACTIVITIES SHALL OCCUR WITHIN THE FENCED PROTECTION AREA.

DEMO NOTES:

1. SAWCUT & REMOVE ALL PAVEMENT TO FULL DEPTH OF SLAB.
2. PROTECT ALL TREES NOT CALLED OUT FOR REMOVAL WITH ORANGE CONSTRUCTION FENCE AT THE DRIP LINE.
3. PAVEMENT STRIPING CALLED OUT FOR REMOVAL SHALL BE SANDBLASTED. NO GRINDING WILL BE ALLOWED.
4. CONTRACTOR TO LOCATE AND VERIFY ALL EXISTING UTILITY LOCATIONS AND DEPTH ON SITE PRIOR TO CONSTRUCTION AND CONTACT ENGINEER/OWNER IF DIFFERENT FROM PLANS OR IN CONFLICT IN CONSTRUCTION ACTIVITIES.
5. CONTRACTOR TO PROTECT ALL UTILITIES, PAVEMENTS AND STRUCTURES THAT ARE NOT SCHEDULED FOR REMOVAL. CONTRACTOR SHALL REPAIR AND/OR REPLACE ANY DAMAGED UTILITIES, PAVEMENTS, AND STRUCTURES NOT SCHEDULED FOR REMOVAL PER CITY/OWNER SPECIFICATIONS AT THE CONTRACTORS EXPENSE.
6. CONTRACTOR TO COORDINATE WITH OWNER FOR SALVAGING & STORING MATERIALS AT A LOCATION DESIGNATED BY THE OWNER.
7. CONTRACTOR TO COORDINATE WITH UTILITY OWNERS AND MEP FOR ANY REQUIRED RELOCATION OR ADJUSTMENT OF EXISTING FIBER, ELECTRIC AND GAS LINES AS NEEDED TO AVOID CONFLICT WITH CONSTRUCTION ACTIVITIES AND IMPROVEMENTS.
8. CONTRACTOR SHALL CONTAIN AND REMOVE SLURRY FROM SAWCUTING FROM THE PROJECT SITE.
9. CONTRACTOR TO COORDINATE WITH DES MOINES WATER WORKS TO REMOVE/DEMO EXISTING WATER SERVICES ALL THE WAY TO PUBLIC WATERMAIN.
10. ALL UNDERGROUNDING OF OVERHEAD ELECTRIC AND DEMOLITION OF POWER POLES TO BE COMPLETED BY MIDAMERICAN ENERGY. CONTRACTOR TO COORDINATE WITH MEP AND MIDAMERICAN DURING CONSTRUCTION FOR SCHEDULING AND REMOVALS.

DEMO LEGEND:

- PAVEMENT REMOVAL LIMITS
- DENOTES PROTECTION
- DENOTES REMOVAL

GRAPHIC SCALE

30 0 15 30 60

BISHOP ENGINEERING +
3501 104th Street, Urbandale, IA 50322 Ph: 515-276-0467

SITE PLAN
BROADLAWNS PARKING LOT EXPANSION
1826 HICKMAN ROAD
DES MOINES, IA 50314

REFERENCE NUMBER:

DRAWN BY: LCR

REVISION DATE:
1ST CITY SUB: 2026-05-13
2ND CITY SUB: 2026-07-27
90% CD SET: 2026-08-25
100% BID SET: 2026-09-10

PROJECT NUMBER: 240308-1

SHEET NAME: DEMO PLAN

SHEET NUMBER: C1.1

9/9/2026 11:01:21 AM L:\LAND PROJECTS 2024\240308-1 BROADLAWNS PARKING LOT EXPANSION\DWG\C1 EX. CONDITIONS & DEMO.DWG

PRELIMINARY- NOT FOR CONSTRUCTION

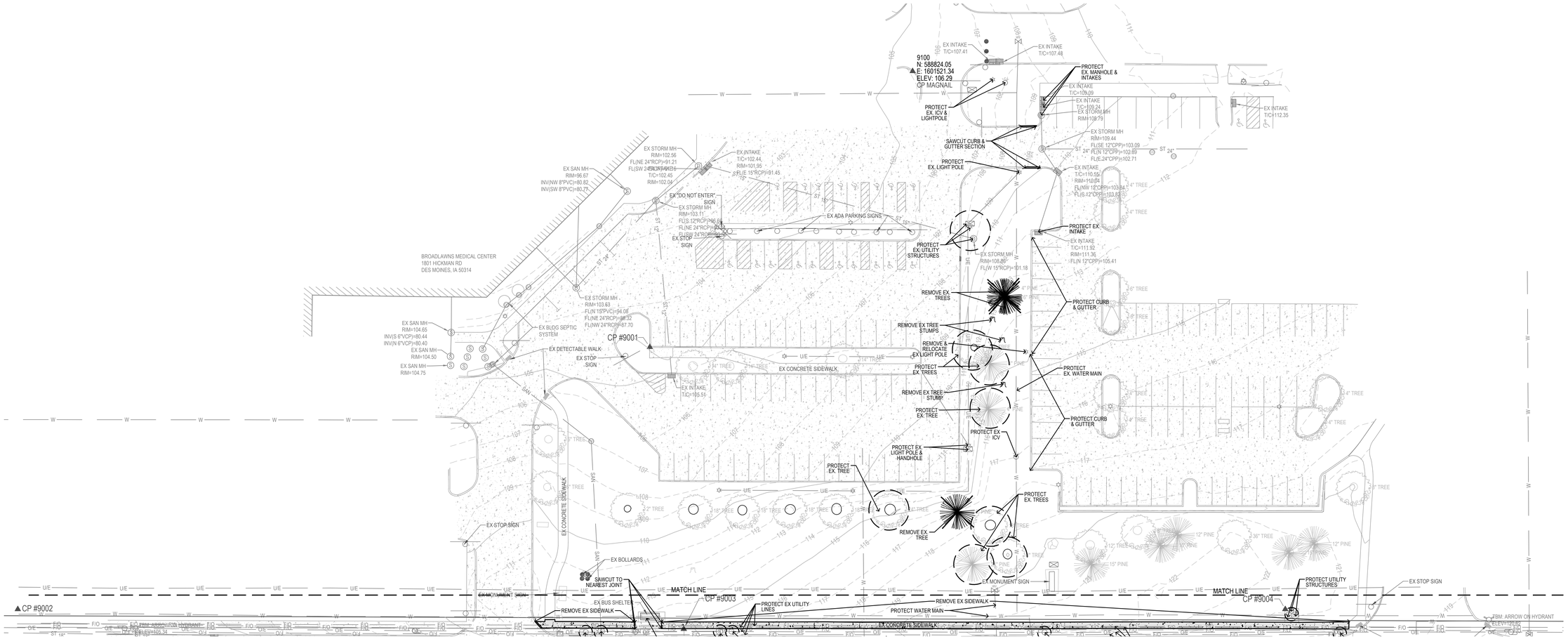

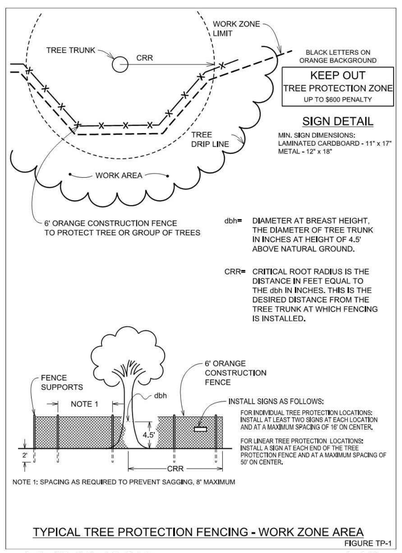

TYPICAL TREE PROTECTION FENCING - WORK ZONE AREA

FIGURE TP-1

Supplemental Specifications for Tree Protection — Page 5 of 6

TREE PROTECTION NOTES:

1. TREE PROTECTION FENCING SHALL BE INSTALLED PRIOR TO THE COMMENCEMENT OF ANY SITE WORK AND WILL BE MAINTAINED THROUGHOUT THE DURATION OF THE PROJECT.
2. NO MATERIAL STORAGE, EQUIPMENT STAGING, VEHICLE ACCESS, SOIL STOCKPILING, OR OTHER CONSTRUCTION ACTIVITIES SHALL OCCUR WITHIN THE FENCED PROTECTION AREA.

DEMO NOTES:

1. SAWCUT & REMOVE ALL PAVEMENT TO FULL DEPTH OF SLAB.
2. PROTECT ALL TREES NOT CALLED OUT FOR REMOVAL WITH ORANGE CONSTRUCTION FENCE AT THE DRIP LINE.
3. PAVEMENT STRIPING CALLED OUT FOR REMOVAL SHALL BE SANDBLASTED. NO GRINDING WILL BE ALLOWED.
4. CONTRACTOR TO LOCATE AND VERIFY ALL EXISTING UTILITY LOCATIONS AND DEPTH ON SITE PRIOR TO CONSTRUCTION AND CONTACT ENGINEER/OWNER IF DIFFERENT FROM PLANS OR IN CONFLICT IN CONSTRUCTION ACTIVITIES.
5. CONTRACTOR TO PROTECT ALL UTILITIES, PAVEMENTS AND STRUCTURES THAT ARE NOT SCHEDULED FOR REMOVAL. CONTRACTOR SHALL REPAIR AND/OR REPLACE ANY DAMAGED UTILITIES, PAVEMENTS, AND STRUCTURES NOT SCHEDULED FOR REMOVAL PER CITY/OWNER SPECIFICATIONS AT THE CONTRACTORS EXPENSE.
6. CONTRACTOR TO COORDINATE WITH OWNER FOR SALVAGING & STORING MATERIALS AT A LOCATION DESIGNATED BY THE OWNER.
7. CONTRACTOR TO COORDINATE WITH UTILITY OWNERS AND MEP FOR ANY REQUIRED RELOCATION OR ADJUSTMENT OF EXISTING FIBER, ELECTRIC AND GAS LINES AS NEEDED TO AVOID CONFLICT WITH CONSTRUCTION ACTIVITIES AND IMPROVEMENTS.
8. CONTRACTOR SHALL CONTAIN AND REMOVE SLURRY FROM SAWCUTING FROM THE PROJECT SITE.
9. CONTRACTOR TO COORDINATE WITH DES MOINES WATER WORKS TO REMOVE/DEMO EXISTING WATER SERVICES ALL THE WAY TO PUBLIC WATERMAIN.

DEMO LEGEND:

- PAVEMENT REMOVAL LIMITS
- DENOTES PROTECTION
- DENOTES REMOVAL

GRAPHIC SCALE

30 0 15 30 60

BISHOP ENGINEERING +
3501 104th Street, Urbandale, IA 50322 Ph: 515-276-0467

SITE PLAN
BROADLAWNS PARKING LOT EXPANSION
1826 HICKMAN ROAD
DES MOINES, IA 50314

REFERENCE NUMBER:

DRAWN BY: LCR

REVISION DATE:
1ST CITY SUB: 2026-05-13
2ND CITY SUB: 2026-07-27
90% CD SET: 2026-08-25
100% BID SET: 2026-09-10

PROJECT NUMBER: 240308-1

SHEET NAME: DEMO PLAN

SHEET NUMBER: C1.2

9/10/2026 9:46:27 AM L:\LAND PROJECTS\2024\240308-1 BROADLAWNS PARKING LOT EXPANSION\DWG\C1 EX. CONDITIONS & DEMO.DWG

PRELIMINARY. NOT FOR CONSTRUCTION

SOUTH SITE

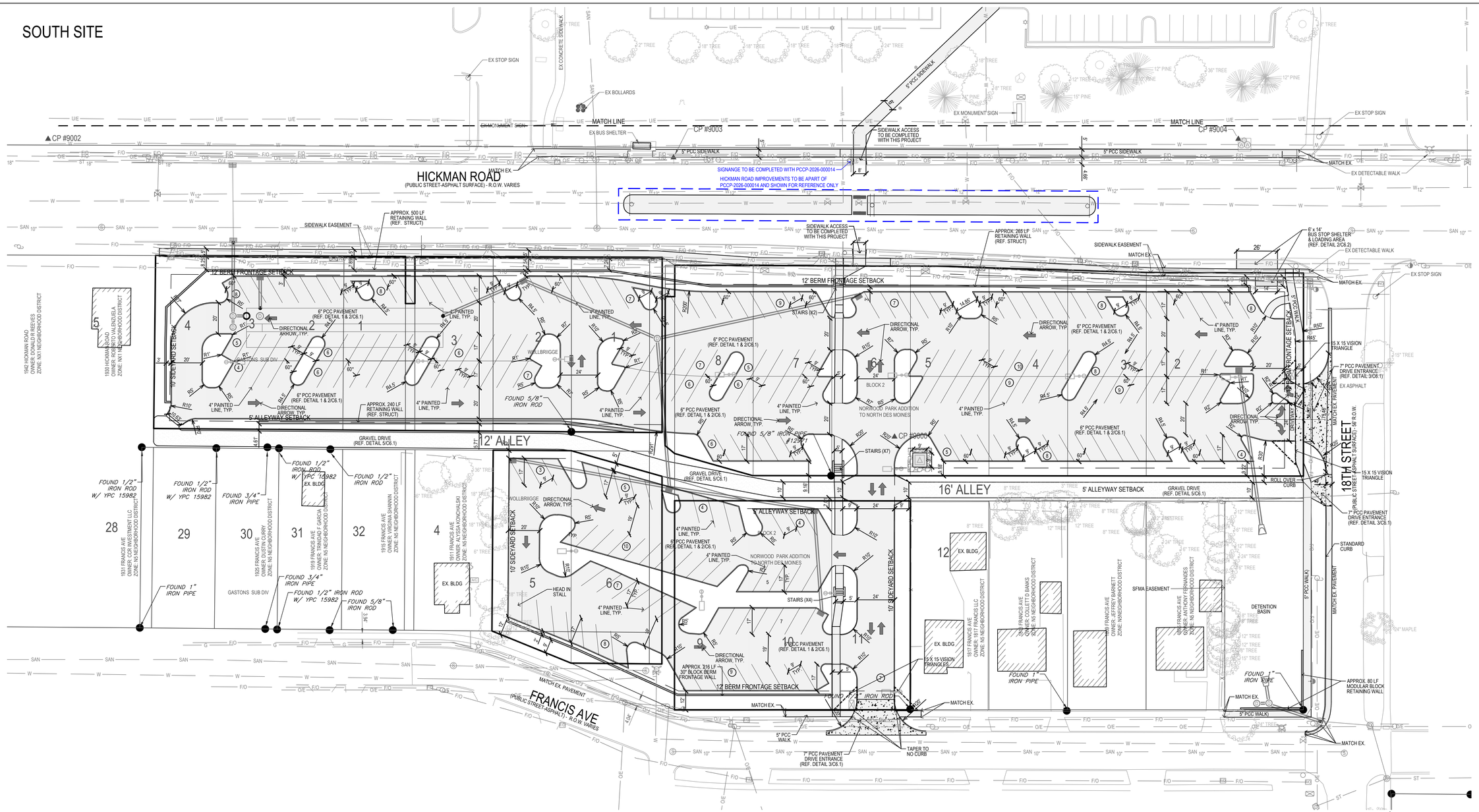

GENERAL NOTES:

1. CONTRACTOR TO PROVIDE GRADATION TESTING FOR EVERY 200 TONS OF GRANULAR MATERIAL DELIVERED TO THE SITE GRADATION TESTING IS TO BE CONDUCTED AND REVIEWED BY GEOTECHNICAL FIRM PRIOR TO GRANULAR MATERIAL BEING INSTALLED.
2. THE RECOMMENDED DESIGN AND SPECIFICATIONS HAVE BEEN APPROVED BY THE OWNER.
3. ANY RECOMMENDATIONS MADE BY THE OWNER'S SELECTED GEOTECHNICAL FIRM SHALL GOVERN.
4. IF GRANULAR MATERIAL ARE INSTALLED THAT DO NOT MEET THE OWNER'S SELECTED GEOTECHNICAL FIRM SPECIFICATIONS. THE CONTRACTOR, SHALL AT THEIR OWN EXPENSE, REMOVE AND REPLACE THE DEFICIENT GRANULAR MATERIAL PER SPECIFICATION.
5. ALL SIGNAGE SHALL RECEIVE SEPARATE APPROVALS WITH A SIGNED PERMIT APPLICATION FROM THE CITY OF DES MOINES ZONING ENFORCEMENT DIVISION. ALL NEW EXTERIOR SIGNS ARE REVIEWED SEPARATELY AND MUST BE APPROVED WITH ZONING ENFORCEMENT (515-283-4200) BEFORE SIGN PERMITS CAN BE ISSUED

PAVEMENT & ASPHALT PLACEMENT NOTES:

1. CONTRACTOR TO CONNECT TO EXISTING PCC PAVEMENTS WITH IOWA SUDAS TYPICAL BT JOINT.

CITY OF DES MOINES COORDINATION NOTES:

1. THE CITY WILL BE RESURFACING HICKMAN ROAD FROM MARTIN LUTHER KING JR. PARKWAY TO JUST EAST OF 18TH STREET IN 2027. AS PART OF THE RESURFACING, THE CITY WILL ALSO BE RESTRIPING HICKMAN ROAD FROM 4-LANES TO 3-LANES PER THE HICKMAN ROAD CORRIDOR STUDY COMPLETED IN 2023. THIS WORK WILL BE COMPLETED PRIOR TO JUNE 1ST, 2027.

LANDSCAPING NOTES:

1. ALL LANDSCAPE ISLANDS CONTAINING TREES SHALL PROVIDE THE REQUIRED SOIL VOLUME TO A MINIMUM DEPTH OF 3 FEET IN ACCORDANCE WITH CHAPTER 135-7.3.3. REQUIRED SOIL VOLUME SHALL CONSIST OF SUITABLE, UNCOMPACTED PLANTING SOIL CAPABLE OF SUPPORTING HEALTHY TREE GROWTH, CONSTRUCTION DEBRIS, AGGREGATE BASE, HEAVILY COMPACTED SUBGRADE, AND OTHER UNSUITABLE MATERIAL SHALL NOT BE INCLUDED IN THE REQUIRED SOIL VOLUME. WHERE EXISTING SOILS DO NOT MEET THESE CONDITIONS, UNSUITABLE MATERIAL SHALL BE EXCAVATED AND REPLACED WITH SUITABLE PLANTING SOIL

GRAPHIC SCALE

30 0 15 30 60

BISHOP ENGINEERING +
3501 104th Street, Urbandale, IA 50322 Ph: 515-276-0467

SITE PLAN
BROADLAWNS PARKING LOT EXPANSION
1826 HICKMAN ROAD
DES MOINES, IA 50314

REFERENCE NUMBER:

DRAWN BY: LCR

REVISION DATE:
1ST CITY SUB: 2026-05-13
2ND CITY SUB: 2026-07-27
90% CD SET: 2026-08-25
100% BID SET: 2026-09-10

PROJECT NUMBER: 240308-1

SHEET NAME: LAYOUT PLAN

SHEET NUMBER: C2.1

9/9/2026 11:03:57 AM L:\LAND PROJECTS 2024\240308-1 BROADLAWNS PARKING LOT EXPANSION\DWG\C2 LAYOUT.DWG

PRELIMINARY- NOT FOR CONSTRUCTION

9/9/2026 1:04:12 PM L:\LAND PROJECTS 2024\240308-1 BROADLAWNS PARKING LOT EXPANSION\DWG\C2 LAYOUT.DWG

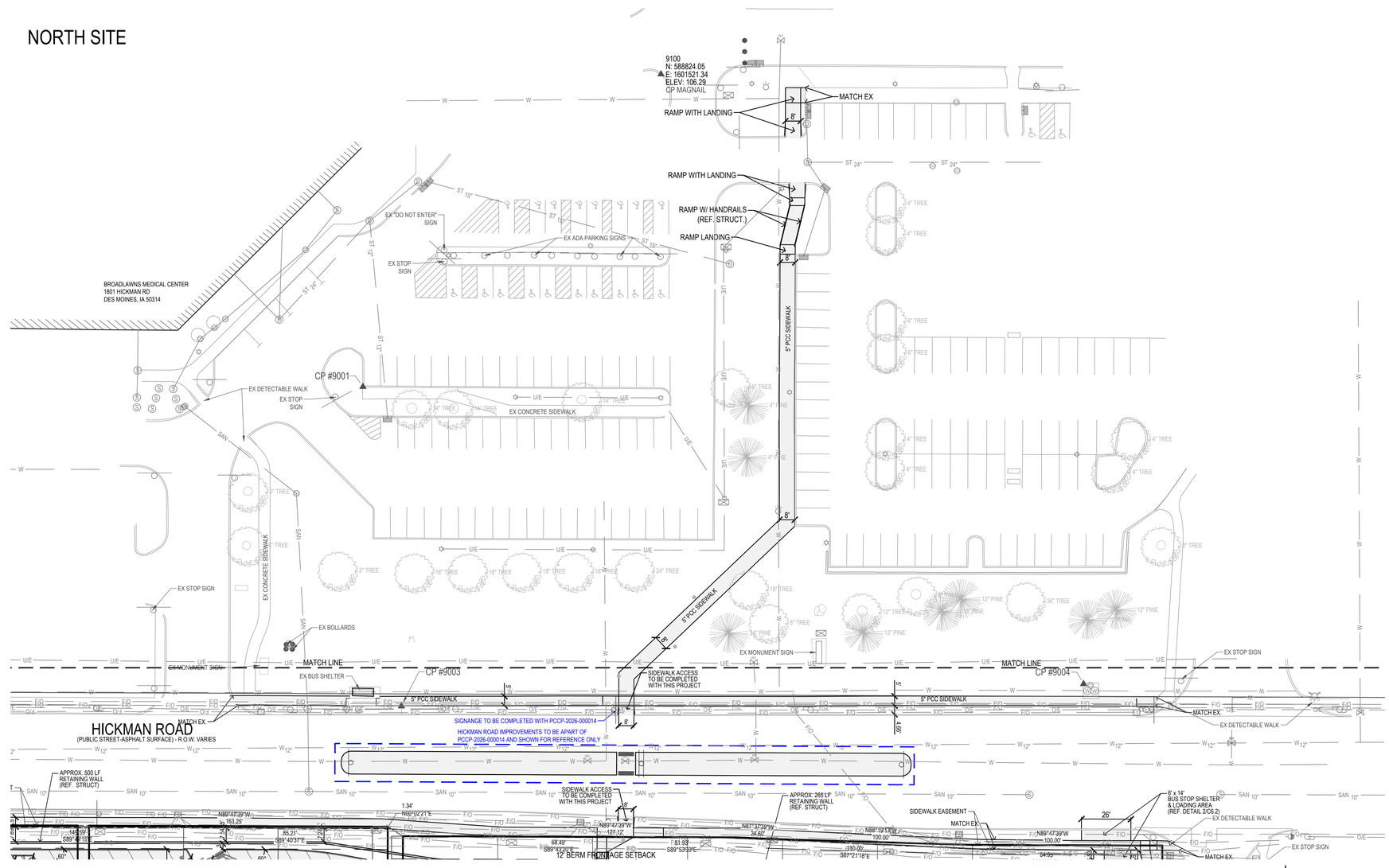

GENERAL NOTES:

1. CONTRACTOR TO PROVIDE GRADATION TESTING FOR EVERY 200 TONS OF GRANULAR MATERIAL DELIVERED TO THE SITE GRADATION TESTING IS TO BE CONDUCTED AND REVIEWED BY GEOTECHNICAL FIRM PRIOR TO GRANULAR MATERIAL BEING INSTALLED.
2. THE RECOMMENDED DESIGN AND SPECIFICATIONS HAVE BEEN APPROVED BY THE OWNER.
3. ANY RECOMMENDATIONS MADE BY THE OWNER'S SELECTED GEOTECHNICAL FIRM SHALL GOVERN.
4. IF GRANULAR MATERIAL ARE INSTALLED THAT DO NOT MEET THE OWNER'S SELECTED GEOTECHNICAL FIRM SPECIFICATIONS. THE CONTRACTOR, SHALL AT THEIR OWN EXPENSE, REMOVE AND REPLACE THE DEFICIENT GRANULAR MATERIAL PER SPECIFICATION.
5. ALL SIGNAGE SHALL RECEIVE SEPARATE APPROVALS WITH A SIGNED PERMIT APPLICATION FROM THE CITY OF DES MOINES ZONING ENFORCEMENT DIVISION. ALL NEW EXTERIOR SIGNS ARE REVIEWED SEPARATELY AND MUST BE APPROVED WITH ZONING ENFORCEMENT (515-283-4200) BEFORE SIGN PERMITS CAN BE ISSUED

PAVEMENT & ASPHALT PLACEMENT NOTES:

1. CONTRACTOR TO CONNECT TO EXISTING PCC PAVEMENTS WITH IOWA SUDAS TYPICAL BT JOINT.

CITY OF DES MOINES COORDINATION NOTES:

1. THE CITY WILL BE RESURFACING HICKMAN ROAD FROM MARTIN LUTHER KING JR. PARKWAY TO JUST EAST OF 18TH STREET IN 2027. AS PART OF THE RESURFACING, THE CITY WILL ALSO BE RESTRIPING HICKMAN ROAD FROM 4-LANES TO 3-LANES PER THE HICKMAN ROAD CORRIDOR STUDY COMPLETED IN 2023. THIS WORK WILL BE COMPLETED PRIOR TO JUNE 1ST, 2027.

BISHOP ENGINEERING +
3501 104th Street, Urbandale, IA 50322 Ph: 515-276-0467

SITE PLAN
BROADLAWNS PARKING LOT EXPANSION
1826 HICKMAN ROAD
DES MOINES, IA 50314

REFERENCE NUMBER:

DRAWN BY: LCR

REVISION DATE:
1ST CITY SUB: 2026-05-13
2ND CITY SUB: 2026-07-27
90% CD SET: 2026-08-25
100% BID SET: 2026-09-10

PROJECT NUMBER: 240308-1

SHEET NAME: LAYOUT PLAN

SHEET NUMBER: C2.2

PRELIMINARY- NOT FOR CONSTRUCTION

9/9/2026 1:07:52 PM L:\LAND PROJECTS 2024\240308-1 BROADLAWNS PARKING LOT EXPANSION\DWG\C2 LAYOUT BID ALT.DWG

SOUTH SITE BID ALT.

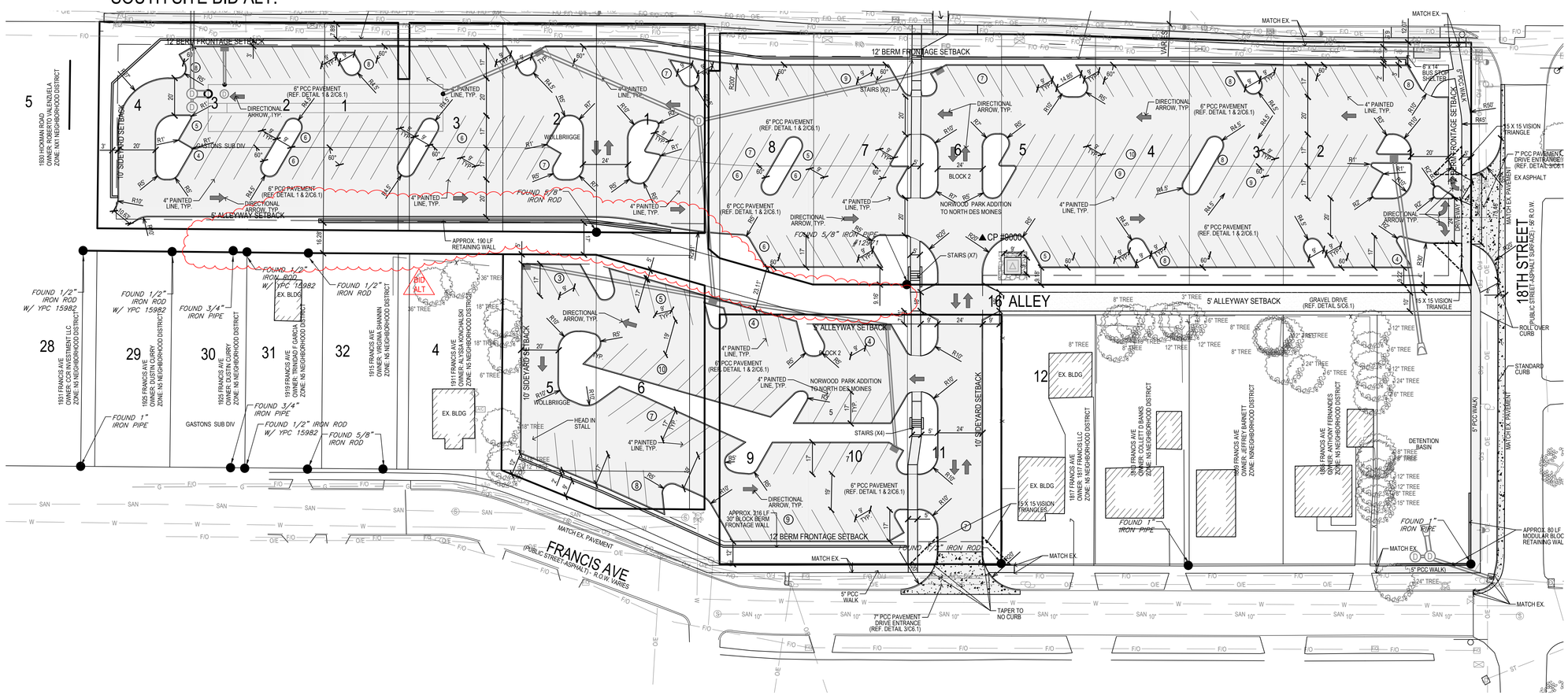

GRAPHIC SCALE

30 0 15 30 60

BISHOP ENGINEERING +
3501 104th Street, Urbandale, IA 50322 Ph: 515-276-0467

SITE PLAN
BROADLAWNS PARKING LOT EXPANSION
1826 HICKMAN ROAD
DES MOINES, IA 50314

REFERENCE NUMBER:

DRAWN BY:
LCR

REVISION DATE:
1ST CITY SUB: 2026-05-13
2ND CITY SUB: 2026-07-27
90% CD SET: 2026-08-25
100% BID SET: 2026-09-10

PROJECT NUMBER:
240308-1

SHEET NAME:
BID ALT.
LAYOUT PLAN

SHEET NUMBER:
C2.3

PRELIMINARY. NOT FOR CONSTRUCTION

9/9/2026 1:12:04 PM L:\LAND PROJECTS 2024\240308-1 BROADLAWNS PARKING LOT EXPANSION\DWG\C3 GRADING.DWG

SOUTH SITE

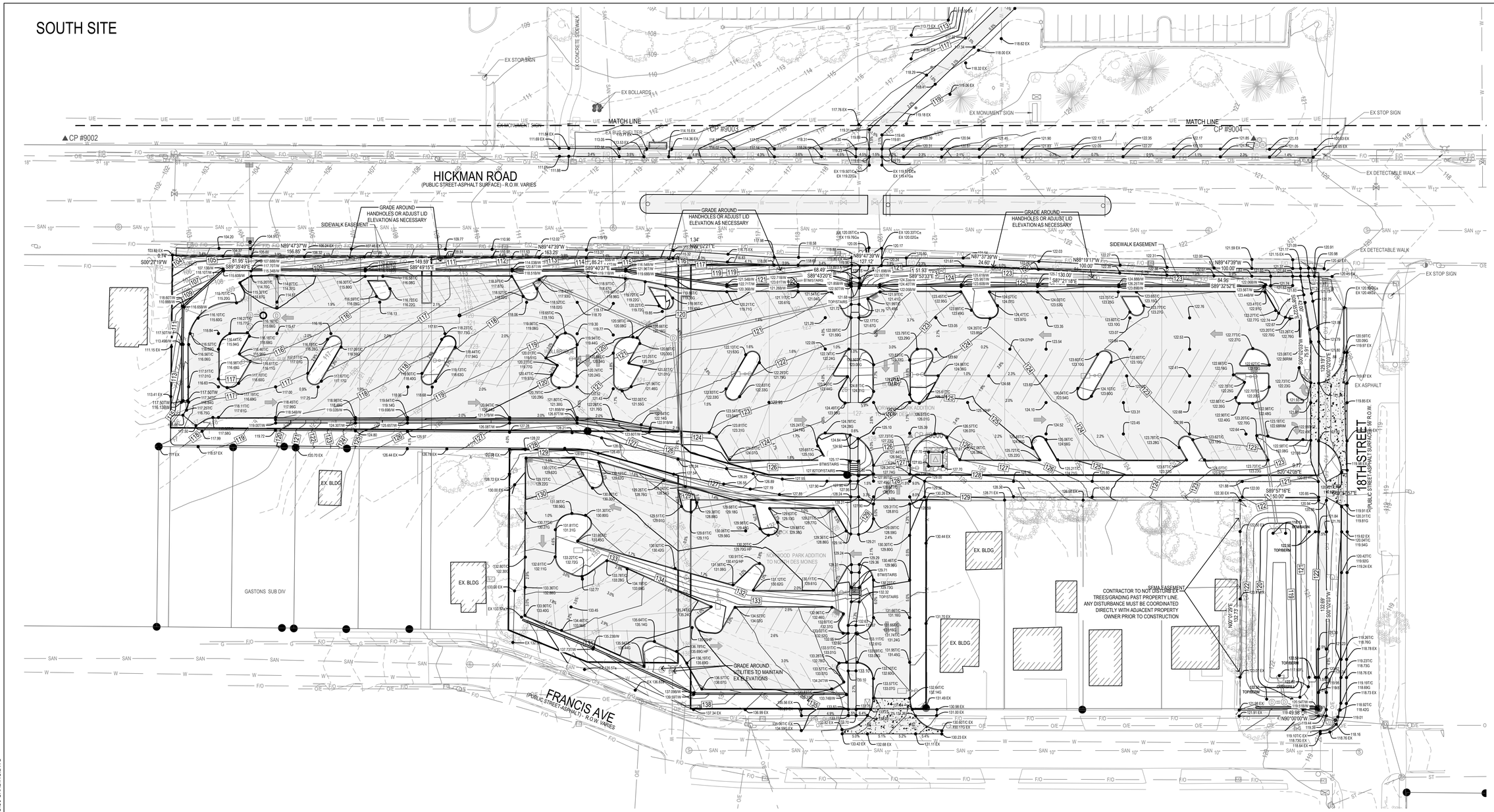

GRADING LEGEND:

EXISTING CONTOUR	150
PROPOSED CONTOUR	150
FINISHED GROUND ELEVATION	150.50
TOP OF CURB ELEVATION	150.50T/C
GUTTER ELEVATION	150.50G
TOP OF WALL ELEVATION	150.50T/W
BOTTOM OF WALL ELEVATION	150.50B/W
EDGE OF WALK ELEVATION	150.50E/W
TOP OF STAIR ELEVATION	150.50T/S
BOTTOM OF STAIR ELEVATION	150.50B/S

NOTE: WALL ELEVATIONS SHOWN ON PLAN ARE FINISHED GROUND GRADES AT THE TOP AND BOTTOM OF THE WALL.

TOPSOIL NOTES:

1. STRIP AND STOCKPILE THE TOP 8" OF SOIL ON ALL DISTURBED AREAS.
2. RESPREAD TOPSOIL TO A MINIMUM DEPTH OF 8" ON ALL GREEN (NON PAVED) AREAS. IMPORT TOPSOIL AS NECESSARY TO ACHIEVE A MINIMUM DEPTH OF 6".
3. **TOPSOIL SHALL BE FREE OF ALL ROCK AND DEBRIS LARGER THAN 3/4" IN SIZE.**
4. TOPSOIL IS DEFINED AS: FERTILE, FRIABLE LOAM, CAPABLE OF SUSTAINING VIGOROUS PLANT GROWTH, FROM WELL DRAINED SITE FREE FROM FLOODING, NOT IN FROZEN OR MUDDY CONDITIONS; REASONABLE FREE FROM SUBSOIL, CLAY LUMPS, ROOTS, GRASS, WEEDS, STONES LARGER THAN 3/4 INCH IN DIAMETER, AND FOREIGN MATTER; ACIDITY RANGE (PH) OF 5.5 TO 7.5; CONTAINING MINIMUM 4 PERCENT AND MAXIMUM 20 PERCENT ORGANIC MATTER.
5. CONTRACTOR SHALL BE RESPONSIBLE FOR ENSURING ALL TOPSOIL REQUIREMENTS OF NPDES GENERAL PERMIT NO. 2 ARE MET.

GRAPHIC SCALE

30 0 15 30 60

BISHOP ENGINEERING +
3501 104th Street, Urbandale, IA 50322 Ph: 515-276-0467

SITE PLAN
BROADLAWNS PARKING LOT EXPANSION
1826 HICKMAN ROAD
DES MOINES, IA 50314

REFERENCE NUMBER:

DRAWN BY: LCR

REVISION DATE:
1ST CITY SUB: 2026-05-13
2ND CITY SUB: 2026-07-27
90% CD SET: 2026-08-25
100% BID SET: 2026-09-10

PROJECT NUMBER: 240308-1

SHEET NAME: GRADING PLAN

SHEET NUMBER: C3.1

PRELIMINARY- NOT FOR CONSTRUCTION

9/10/2026 9:42:59 AM L:\LAND PROJECTS 2024\240308-1 BROADLAWNS PARKING LOT EXPANSION\DWG\C3 GRADING.DWG

NORTH SITE

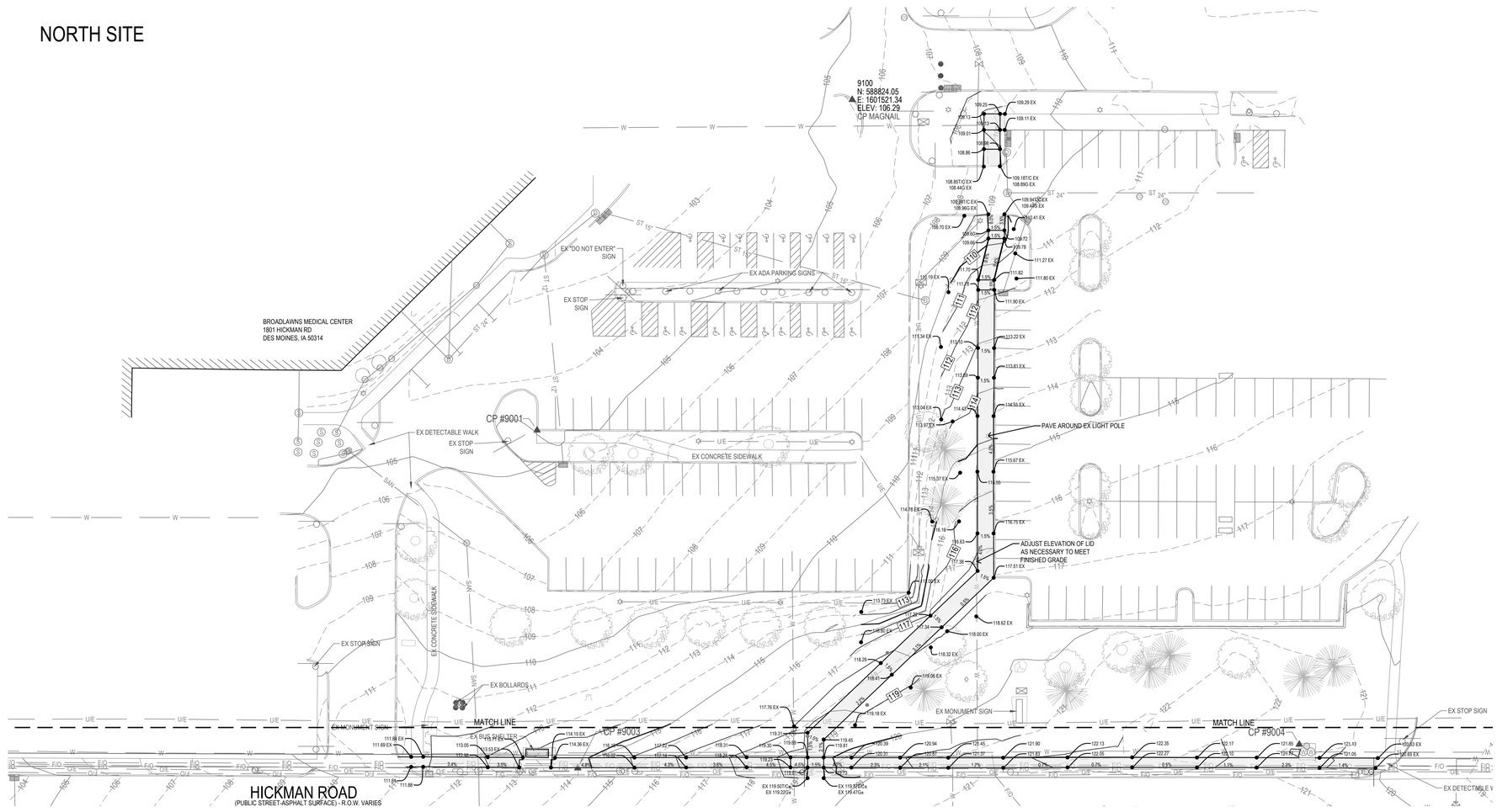

GRADING LEGEND:

EXISTING CONTOUR	150
PROPOSED CONTOUR	150
FINISHED GROUND ELEVATION	150.50
TOP OF CURB ELEVATION	150.50T/C
GUTTER ELEVATION	150.50G
TOP OF WALL ELEVATION	150.50T/W
BOTTOM OF WALL ELEVATION	150.50B/W
EDGE OF WALK ELEVATION	150.50E/W
TOP OF STAIR ELEVATION	150.50T/S
BOTTOM OF STAIR ELEVATION	150.50B/S

NOTE: WALL ELEVATIONS SHOWN ON PLAN ARE FINISHED GROUND GRADES AT THE TOP AND BOTTOM OF THE WALL.

TOPSOIL NOTES:

1. STRIP AND STOCKPILE THE TOP 8" OF SOIL ON ALL DISTURBED AREAS.
2. RESPREAD TOPSOIL TO A MINIMUM DEPTH OF 8" ON ALL GREEN (NON PAVED) AREAS. IMPORT TOPSOIL AS NECESSARY TO ACHIEVE A MINIMUM DEPTH OF 6".
3. **TOPSOIL SHALL BE FREE OF ALL ROCK AND DEBRIS LARGER THAN 3/4" IN SIZE.**
4. TOPSOIL IS DEFINED AS: FERTILE, FRIABLE LOAM, CAPABLE OF SUSTAINING VIGOROUS PLANT GROWTH, FROM WELL DRAINED SITE FREE FROM FLOODING, NOT IN FROZEN OR MUDDY CONDITIONS; REASONABLE FREE FROM SUBSOIL, CLAY LUMPS, ROOTS, GRASS, WEEDS, STONES LARGER THAN 3/4 INCH IN DIAMETER, AND FOREIGN MATTER; ACIDITY RANGE (PH) OF 5.5 TO 7.5; CONTAINING MINIMUM 4 PERCENT AND MAXIMUM 20 PERCENT ORGANIC MATTER.
5. CONTRACTOR SHALL BE RESPONSIBLE FOR ENSURING ALL TOPSOIL REQUIREMENTS OF NPDES GENERAL PERMIT NO. 2 ARE MET.

N

GRAPHIC SCALE

30 0 15 30 60

BISHOP ENGINEERING +
3501 104th Street, Urbandale, IA 50322 Ph: 515-276-0467

SITE PLAN
BROADLAWNS PARKING LOT EXPANSION
1826 HICKMAN ROAD
DES MOINES, IA 50314

REFERENCE NUMBER:

DRAWN BY:
LCR

REVISION DATE:
1ST CITY SUB: 2026-05-13
2ND CITY SUB: 2026-07-27
90% CD SET: 2026-08-25
100% BID SET: 2026-09-10

PROJECT NUMBER:
240308-1

SHEET NAME:
GRADING PLAN

SHEET NUMBER:
C3.2

PRELIMINARY- NOT FOR CONSTRUCTION

TOPSOIL NOTES:

1. STRIP AND STOCKPILE THE TOP 8" OF SOIL ON ALL DISTURBED AREAS.
2. RESPREAD TOPSOIL TO A MINIMUM DEPTH OF 8" ON ALL GREEN (NON PAVED) AREAS. IMPORT TOPSOIL AS NECESSARY TO ACHIEVE A MINIMUM DEPTH OF 6".
3. **TOPSOIL SHALL BE FREE OF ALL ROCK AND DEBRIS LARGER THAN 3/4" IN SIZE.**
4. TOPSOIL IS DEFINED AS: FERTILE, FRIABLE LOAM, CAPABLE OF SUSTAINING VIGOROUS PLANT GROWTH, FROM WELL DRAINED SITE FREE FROM FLOODING, NOT IN FROZEN OR MUDDY CONDITIONS; REASONABLE FREE FROM SUBSOIL, CLAY LUMPS, ROOTS, GRASS, WEEDS, STONES LARGER THAN 3/4 INCH IN DIAMETER, AND FOREIGN MATTER; ACIDITY RANGE (PH) OF 5.5 TO 7.5; CONTAINING MINIMUM 4 PERCENT AND MAXIMUM 20 PERCENT ORGANIC MATTER.
5. CONTRACTOR SHALL BE RESPONSIBLE FOR ENSURING ALL TOPSOIL REQUIREMENTS OF NPDES GENERAL PERMIT NO. 2 ARE MET.

GRADING LEGEND:

EXISTING CONTOUR	— —150— —
PROPOSED CONTOUR	—150—
FINISHED GROUND ELEVATION	150.50
TOP OF CURB ELEVATION	150.50T/C
GUTTER ELEVATION	150.50G
TOP OF WALL ELEVATION	150.50T/W
BOTTOM OF WALL ELEVATION	150.50B/W
EDGE OF WALK ELEVATION	150.50E/W
TOP OF STAIR ELEVATION	150.50T/S
BOTTOM OF STAIR ELEVATION	150.50B/S

NOTE: WALL ELEVATIONS SHOWN ON PLAN ARE FINISHED GROUND GRADES AT THE TOP AND BOTTOM OF THE WALL.

SOUTH SITE BID ALT.

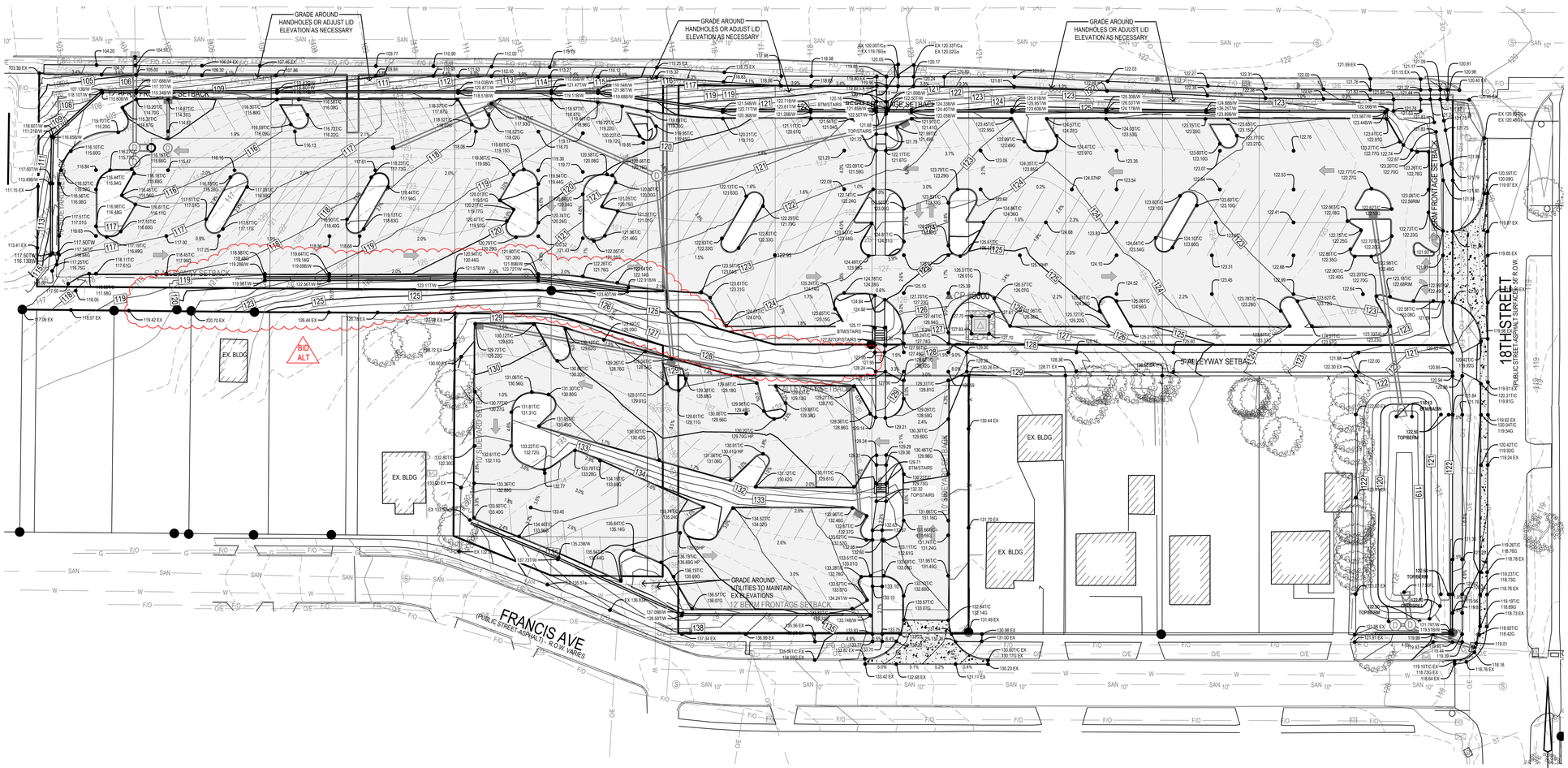

GRAPHIC SCALE

30 0 15 30 60

BISHOP ENGINEERING +
3501 104th Street, Urbandale, IA 50322 Ph: 515-276-0467

SITE PLAN
BROADLAWNS PARKING LOT EXPANSION
1826 HICKMAN ROAD
DES MOINES, IA 50314

REFERENCE NUMBER:

DRAWN BY: LCR

REVISION DATE:
1ST CITY SUB: 2026-05-13
2ND CITY SUB: 2026-07-27
90% CD SET: 2026-08-25
100% BID SET: 2026-09-10

PROJECT NUMBER: 240308-1

SHEET NAME: BID ALT. GRADING PLAN

SHEET NUMBER: C3.3

9/9/2026 1:14:09 PM L:\LAND PROJECTS 2024\240308-1 BROADLAWNS PARKING LOT EXPANSION\DWG\C3 GRADING BID ALT.DWG

PRELIMINARY. NOT FOR CONSTRUCTION

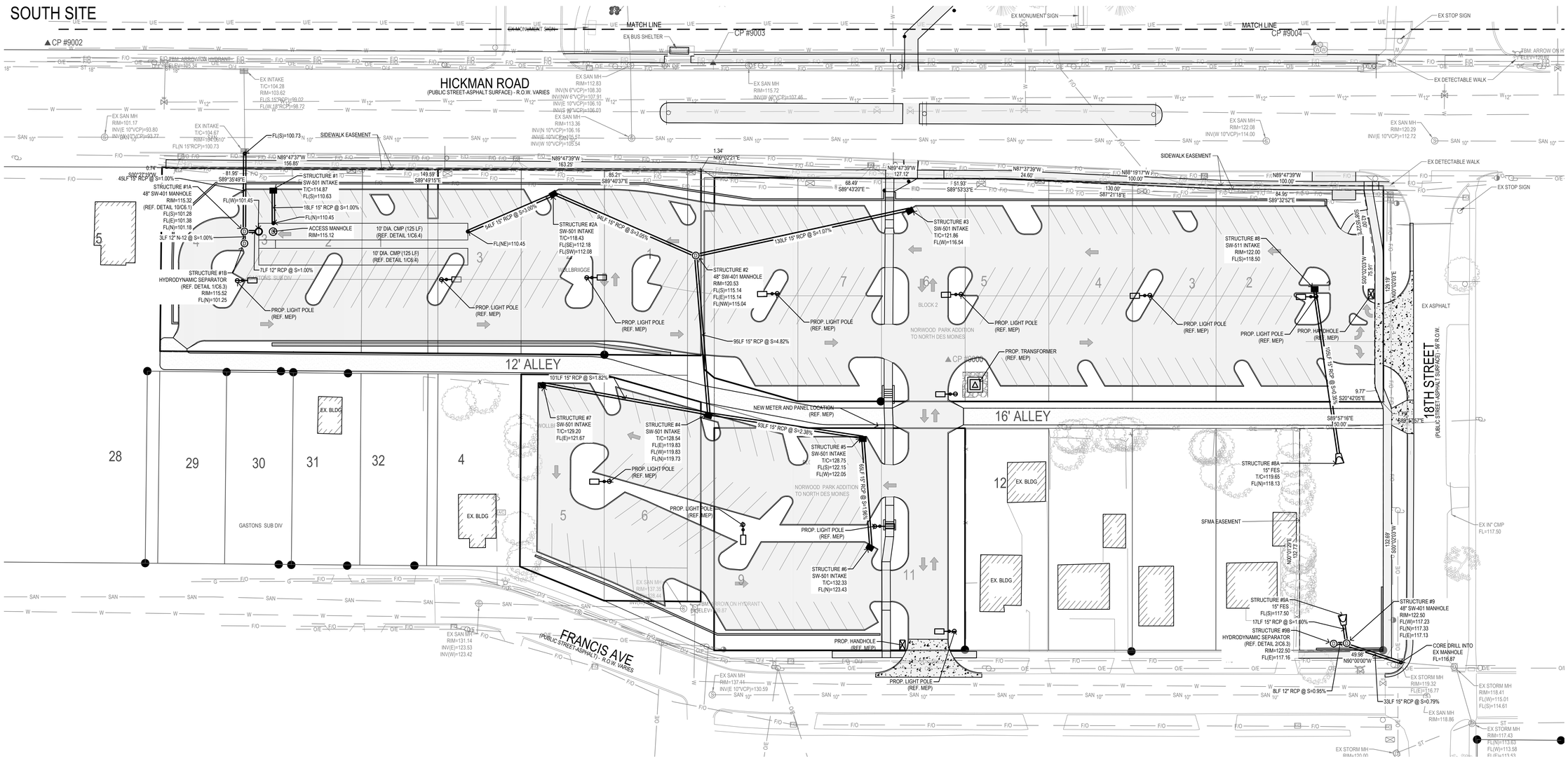

UTILITY NOTES:

1. ALL PROPOSED UTILITIES SHALL BE PRIVATE, UNLESS NOTED OTHERWISE.
2. ALL WATER LINES SHALL HAVE A MINIMUM OF 5.5' OF COVER UNLESS NOTED OTHERWISE.
3. FIRE HYDRANT ASSEMBLY SHALL INCLUDE THE TEE, BRANCH, VALVE AND HYDRANT.
4. PIPE LENGTHS CALLED OUT ON PLANS INCLUDE FLARED END SECTION, WHERE APPLICABLE.
5. STORM SEWER CALLED OUT AS RCP MUST BE CLASS III RCP.
6. STORM SEWER CALLED OUT AS N-12 MAY BE EITHER N-12 OR CLASS III RCP.
7. FOR RCP PIPE, ASSOCIATED F.E.S. MUST BE RCP. FOR N-12 PIPE, ASSOCIATED F.E.S. SHALL BE CMP.
8. ALL NYLOPLAST BASINS SHALL HAVE CASTINGS SECURELY FASTENED TO THE BASIN BODY, AND ALL GRATES/LIDS SHALL BE BOLTED DOWN TO THE CASTINGS.
9. TRANSFORMER PAD IS SHOWN FOR REFERENCE ONLY AND MAY NOT BE DRAWN TO ACTUAL SIZE. PAD SHALL CONFORM TO ALL UTILITY COMPANY DESIGN STANDARDS AND SPECIFICATIONS.
10. CONTRACTOR TO ADJUST EXISTING UTILITY STRUCTURE LID ELEVATIONS TO MEET FINISHED GRADE AS NECESSARY.
11. CONTRACTOR TO COORDINATE DIRECTLY WITH ANY UTILITY / FACILITY OWNER FOR ANY ADJUSTMENT OF EXISTING HANDHOLES ON SITE.
12. ALL UNDERGROUNDING OF OVERHEAD ELECTRIC AND DEMOLITION OF POWER POLES TO BE COMPLETED BY MIDAMERICAN ENERGY. CONTRACTOR TO COORDINATE WITH MEP AND MIDAMERICAN DURING CONSTRUCTION FOR SCHEDULING AND REMOVALS.
13. EXISTING STREET LIGHTS ALONG THE SOUTH SIDE OF HICKMAN ARE TO BE UPGRADED TO GALVENIZED POLES. WORK TO BE COMPLETED BY MIDAMERICAN.

DES MOINES WATER WORKS NOTES:

1. ALL WATER SERVICES/STUBS FRONTING THE PROPERTY THAT ARE NOT BEING USED ARE TO BE CUT AT THE MAIN, COORDINATE TAP CUTS WITH DMWW.
2. PROTECT, SUPPORT AND SHORE WATERMAIN AT ALL UTILITY CROSSINGS.
3. ADJUST ALL VALVE BOXES TO FINISHED GRADE. IF ADJUSTMENTS CANNOT BE MADE, REPLACE VALVE BOXES TO MATCH FINISHED GRADE.

BISHOP ENGINEERING +
3501 104th Street, Urbandale, IA 50322 Ph: 515-276-0467

REFERENCE NUMBER:

DRAWN BY: LCR

REVISION DATE:
1ST CITY SUB: 2026-05-13
2ND CITY SUB: 2026-07-27
90% CD SET: 2026-08-25
100% BID SET: 2026-09-10

PROJECT NUMBER: 240308-1

SHEET NAME: UTILITY PLAN

SHEET NUMBER: C4.1

9/9/2026 1:17:30 PM L:\LAND PROJECTS 2024\240308-1 BROADLAWNS PARKING LOT EXPANSION\DWG\C4 UTILITY.DWG

PRELIMINARY. NOT FOR CONSTRUCTION

9/9/2026 1:19:22 PM L:\LAND PROJECTS 2024\240308-1 BROADLAWNS PARKING LOT EXPANSION\DWG\C4 UTILITY.DWG

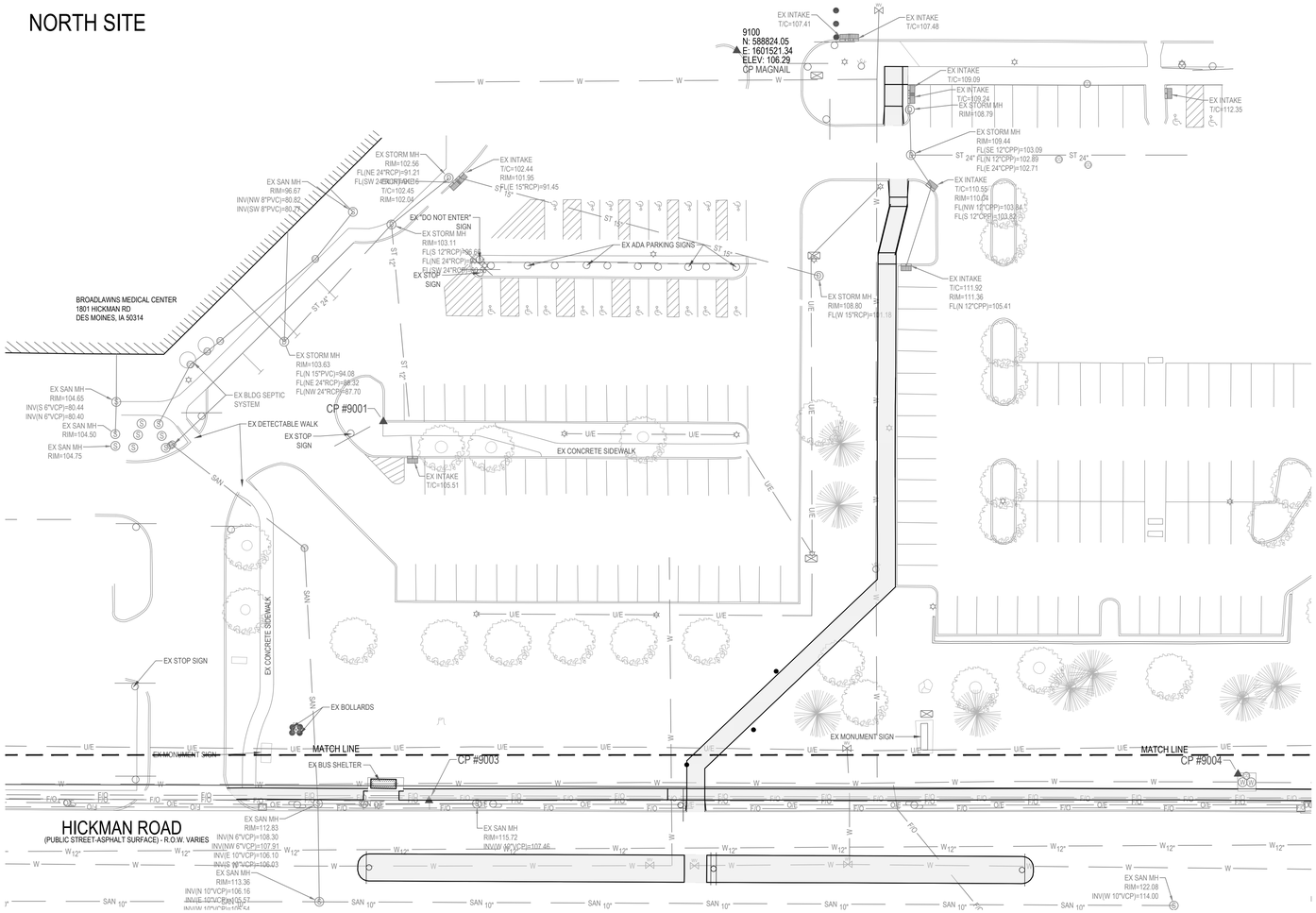

UTILITY NOTES:

1. ALL PROPOSED UTILTIES SHALL BE PRIVATE, UNLESS NOTED OTHERWISE.
2. ALL WATER LINES SHALL HAVE A MINIMUM OF 5.5' OF COVER UNLESS NOTED OTHERWISE.
3. FIRE HYDRANT ASSEMBLY SHALL INCLUDE THE TEE, BRANCH, VALVE AND HYDRANT.
4. PIPE LENGTHS CALLED OUT ON PLANS INCLUDE FLARED END SECTION, WHERE APPLICABLE.
5. STORM SEWER CALLED OUT AS RCP MUST BE CLASS III RCP.
6. STORM SEWER CALLED OUT AS N-12 MAY BE EITHER N-12 OR CLASS III RCP.
7. FOR RCP PIPE, ASSOCIATED F.E.S. MUST BE RCP. FOR N-12 PIPE, ASSOCIATED F.E.S. SHALL BE CMP.
8. ALL NYLOPLAST BASINS SHALL HAVE CASTINGS SECURELY FASTENED TO THE BASIN BODY, AND ALL GRATES/LIDS SHALL BE BOLTED DOWN TO THE CASTINGS.
9. TRANSFORMER PAD IS SHOWN FOR REFERENCE ONLY AND MAY NOT BE DRAWN TO ACTUAL SIZE. PAD SHALL CONFORM TO ALL UTILITY COMPANY DESIGN STANDARDS AND SPECIFICATIONS.
10. CONTRACTOR TO ADJUST EXISTING UTILITY STRUCTURE LID ELEVATIONS TO MEET FINISHED GRADE AS NECESSARY.

DES MOINES WATER WORKS NOTES:

1. ALL WATER SERVICES/STUBS FRONTING THE PROPERTY THAT ARE NOT BEING USED ARE TO BE CUT AT THE MAIN, COORDINATE TAP CUTS WITH DMWW.
2. PROTECT, SUPPORT AND SHORE WATERMAIN AT ALL UTILITY CROSSINGS.
3. ADJUST ALL VALVE BOXES TO FINISHED GRADE. IF ADJUSTMENTS CANNOT BE MADE, REPLACE VALVE BOXES TO MATCH FINISHED GRADE.

GRAPHIC SCALE
30 0 15 30 60

BISHOP ENGINEERING +
3501 104th Street, Urbandale, IA 50322 Ph: 515-276-0467

SITE PLAN
BROADLAWNS PARKING LOT EXPANSION
1826 HICKMAN ROAD
DES MOINES, IA 50314

REFERENCE NUMBER:

DRAWN BY:
LCR

REVISION DATE:
1ST CITY SUB: 2026-05-13
2ND CITY SUB: 2026-07-27
90% CD SET: 2026-08-25
100% BID SET: 2026-09-10

PROJECT NUMBER:
240308-1

SHEET NAME:
UTILITY PLAN

SHEET NUMBER:
C4.2

FOR CONSTRUCTION

PRELIMINARY- NOT FOR CONSTRUCTION

LANDSCAPE NOTES:

1. ALL SODDING/SEEDING & LANDSCAPE PLANTINGS SHALL BE INSTALLED IN ACCORDANCE WITH THE URBAN STANDARD SPECIFICATIONS, UNLESS SPECIFIED OTHERWISE.
2. SOD/SEED ALL DISTURBED AREAS WITHIN THE CONTRACT LIMITS, UNLESS NOTED OTHERWISE. SOD/SEED LIMITS SHOWN ON PLAN ARE FOR REFERENCE ONLY. FINAL LIMITS MAY CHANGE BASED ON CONSTRUCTION ACTIVITIES.
3. STAKE SOD ON ALL SLOPES 3 : 1 OR GREATER.
4. PLANT QUANTITIES ARE FOR CONTRACTORS CONVENIENCE, THE DRAWING SHALL PREVAIL IF A CONFLICT OCCURS.
5. ALL PLANT MATERIAL SHALL CONFORM TO THE LATEST EDITION OF THE AMERICAN STANDARD FOR NURSERY STOCK (ANSI Z60.1).
6. CONTRACTOR SHALL WARRANTY ALL PLANT MATERIAL FOR A PERIOD OF ONE YEAR FROM THE DATE OF INITIAL ACCEPTANCE.
7. FOR WARRANTY PURPOSES, THE DATE OF INITIAL ACCEPTANCE SHALL BE SUBMITTED IN WRITING TO THE OWNER AND/OR OWNER'S REPRESENTATIVE AFTER ALL PLANT MATERIALS HAVE BEEN INSTALLED AND REVIEWED BY OWNER OR OWNER'S REPRESENTATIVE. PLANT MATERIALS WILL ONLY BE ACCEPTED IF THEY ARE IN AN ALIVE AND THRIVING CONDITION.
8. CONDITIONAL ACCEPTANCE OF PLANT MATERIAL MAY BE GIVEN FOR PLANTS INSTALLED IN A DORMANT CONDITION WITH INITIAL ACCEPTANCE OCCURRING THE FOLLOWING SPRING ONCE THEY ARE SHOWN TO BE ALIVE AND THRIVING.
9. IT IS THE CONTRACTORS RESPONSIBILITY TO REMOVE IDENTIFICATION TAGS AND CORDS ON ALL PLANT MATERIAL PRIOR TO THE COMPLETION OF THE CONTRACT. IDENTIFICATION TAGS (INCLUDING SIZING INFORMATION) MUST BE LEFT ON UNTIL AFTER ACCEPTANCE BY OWNER OR OWNER'S REPRESENTATIVE.
10. CONTRACTOR SHALL PLACE SHREDDED HARDWOOD MULCH AROUND ALL TREES, SHRUBS AND GROUND COVER BEDS TO A DEPTH OF 4 INCHES, UNLESS NOTED.
11. STAKING AND GUYING OF TREES SHALL BE AT THE DISCRETION OF THE CONTRACTOR BASED ON CURRENT ACCEPTED NURSERY STANDARDS. GENERALLY, TREES IN LARGE OPEN AREAS SUBJECT O SIGNIFICANT WIND SHALL BE STAKED. STAKE AND WRAP TREES IMMEDIATELY AFTER PLANTING. CONTRACTOR SHALL ADJUST AND MAINTAIN GUYING TENSION THROUGHOUT THE PLANT ESTABLISHMENT PERIOD. REMOVE ALL STAKES AND GUY WIRES NO MORE THAN ONE YEAR AFTER INSTALLATION.
12. THE LANDSCAPING CONTRACTOR SHALL HAVE ALL UTILITIES LOCATED BEFORE STARTING ANY SITE WORK OR PLANTING. THE CONTRACTOR SHALL BE RESPONSIBLE FOR THE PROTECTION OF ALL EXISTING UTILITIES.
13. NO LANDSCAPE MATERIAL SHALL BE SUBSTITUTED WITHOUT THE AUTHORIZATION OF THE LANDSCAPE ARCHITECT.
14. ALL EDGING SHALL BE DURAEDGE 3/16" STEEL EDGING - COLOR BLACK, OR APPROVED EQUAL..
15. CONTRACTOR SHALL BE RESPONSIBLE MAINTAINING APPROPRIATE LEVEL OF WATERING FOR ALL NEW PLANTS FOR A PERIOD OF 30 DAYS.
16. ALL SHRUB AND PERENNIAL PLANTING BEDS SHALL BE MULCHED WITH 4" THICK SHREDDED HARDWOOD MULCH.
17. ALL BEDS TO RECEIVE GRANULAR PRE-EMERGENT WEED CONTROL BEFORE AND AFTER MULCH IS INSTALLED.
18. ALL LANDSCAPE ISLANDS CONTAINING TREES SHALL PROVIDE THE REQUIRED SOIL VOLUME TO A MINIMUM DEPTH OF 3 FEET IN ACCORDANCE WITH CHAPTER 135-7.3.3. REQUIRED SOIL VOLUME SHALL CONSIST OF SUITABLE, UNCOMPACTED PLANTING SOIL CAPABLE OF SUPPORTING HEALTHY TREE GROWTH. CONSTRUCTION DEBRIS, AGGREGATE BASE, HEAVILY COMPACTED SUBGRADE, AND OTHER UNSUITABLE MATERIAL SHALL NOT BE INCLUDED IN THE REQUIRED SOIL VOLUME. WHERE EXISTING SOILS DO NOT MEET THESE CONDITIONS, UNSUITABLE MATERIAL SHALL BE EXCAVATED AND REPLACED WITH SUITABLE PLANTING SOIL.

LEGEND

SOD: PROVIDE AND INSTALL SOD FROM LOCAL SUPPLIERS. AREAS TO BE SODDED MUST BE FREE OF ALL CONSTRUCTION DEBRIS AND ANY DIRT CLUMPS OVER 1" IN DIAMETER. THOROUGHLY WATER SOD UPON INSTALLATION. CONTRACTOR TO MAINTAIN WATERING UNTIL SOD IS ESTABLISHED (ROOTS KNITTED INTO SUBSURFACE)

SEED: MIX TO BE "SUPER TURF II" BY UNITED SEEDS (OR APPROVED EQUAL). SEED AT A RATE OF 440 LBS PER ACRE. SEEDING DATES, SITE PREPARATION, SEEDING INSTALLATION, WATER REQUIREMENTS, FERTILIZING, AND MOWING PER UNITED SEEDS TECH BULLETIN FOR SEED TYPE. OVERSEEDING (IF REQUIRED) TO BE INSTALLED AT 220 LBS PER ACRE.

SHREDDED HARDWOOD MULCH

GENERAL LANDSCAPE REQUIREMENTS

SITE TREE REQUIREMENT

TOTAL SQUARE FOOTAGE OF PROJECT AREA	128,328 SF
REQUIRED CANOPY COVERAGE(15%)	19,249 SF
CANOPY COVERAGE PROVIDED (117 TREES)	117,000 SF

STREET TREE REQUIREMENT

18TH STREET: (278 LF FRONTAGE-142 LF DRIVE/SPACE/ALLEY) /30 =	5 TREES
TOTAL STREET TREES PROVIDED	7 TREES

FRONTAGE BUFFER REQUIREMENTS

HICKMAN RD:

• REQUIRED SHADE TREES: (730 LF/ 30)	24 TREES
• SHADE TREES PROVIDED:	24 TREES
• REQUIRED SHRUBS/GRASSES: (708-21 LF BUS STOP/STAIR/ 3)	229 SHRUBS
• SHRUBS/GRASSES PROVIDED:	231 SHRUBS

FRANCIS AVENUE:

• REQUIRED SHADE TREES: (276-26 LF DRIVE/ 30)	9 TREES
• SHADE TREES PROVIDED: (-2 FOR VISION TRIANGLES)	7 TREES
• REQUIRED SHRUBS/GRASSES: (220/ 3)	74 SHRUBS
• SHRUBS/GRASSES PROVIDED: (-6 FOR VISION TRIANGLES)	72 SHRUBS

18TH STREET:

• REQUIRED SHRUBS/GRASSES: (108-36 LF DRIVE/WALK/ 3)	24 SHRUBS
• SHRUBS/GRASSES PROVIDED: (-7 FOR VISION TRIANGLES)	17 SHRUBS

ALLEYS:

• REQUIRED SHADE TREES: (466-11 LF DRIVE/ 40)	12 TREES
• SHADE TREES PROVIDED:	12 TREES
• REQUIRED SHRUBS/GRASSES: (466-11 LF DRIVE/ 3)	152 SHRUBS
• SHRUBS/GRASSES PROVIDED:	153 SHRUBS

INTERIOR PARKING LOT REQUIREMENTS

SF OF CANOPY COVERAGE REQUIRED: (95,620 SF X 0.3)	28,686 SF
PROVIDED INTERIOR SHADE COVERAGE: (47 TREES x 1,000SF)	47,000 SF

SIDE/REAR BUFFER SCREENING REQUIREMENTS

TOTAL LENGTH OF SIDE BUFFER	358 LF
REQUIRED OVERSTORY TREES (1 / 40 LF)	9 TREES
REQUIRED SHRUBS (1 / 3 LF)	120 SHRUBS

TREE MITIGATION REQUIREMENTS

SIZE REMOVED	TOTAL TREES	REPLACEMENT RATIO	REQ. REPLACEMENTS
12" - 17"	2	1:1	2
18" - 23"	2	1:2	4
24" - 29"	2	1:3	6
30" - 35"	-	1:4	-
36" - 41"	-	1:5	-
42" - 47"	-	1:6	-
60"	1	1:9	9

FOR EVERY 6" INCREMENT ABOVE, ONE ADDITIONAL REPLACEMENT TREE SHALL BE ADDED

TOTAL TREES REQUIRED FOR MITIGATION	21
TOTAL TREES SHOWN ON PLAN FOR MITIGATION PURPOSES	21

PLANT SCHEDULE

CODE	QTY	COMMON NAME	BOTANICAL NAME	SIZE	CONTAINER	REMARKS
DECIDUOUS TREES						
AX	6	Autumn Splendor Arnold Buckeye	Aesculus x arnoldiana 'Autumn Splendor'	2" Cal.	B&B	MATCHED SPECIMENS
BN	6	Heritage River Birch	Betula nigra 'Cully'	2" Cal.	B&B	MATCHED SPECIMENS (STANDARD FORM)
GB	6	Maidenhair Tree	Ginkgo biloba	2" Cal.	B&B	MATCHED SPECIMENS
GE	6	Stately Manor Kentucky Coffeetree	Gymnocladus dioicus 'Stately Manor'	2" Cal.	B&B	MATCHED SPECIMENS
LT	6	Tulip Poplar	Liriodendron tulipifera	2" Cal.	B&B	MATCHED SPECIMENS
NS	6	Tupelo	Nyssa sylvatica	2" Cal.	B&B	MATCHED SPECIMENS
PB	7	Bloodgood London Plane Tree	Platanus x acerifolia 'Bloodgood'	2" Cal.	B&B	MATCHED SPECIMENS
QB	7	Swamp White Oak	Quercus bicolor	2" Cal.	B&B	MATCHED SPECIMENS
QE	6	Northern Pin Oak	Quercus ellipsoidalis	2" Cal.	B&B	MATCHED SPECIMENS
QM	6	Chinkapin Oak	Quercus muehlenbergii	2" Cal.	B&B	MATCHED SPECIMENS
TD	7	Bald Cypress	Taxodium distichum	2" Cal.	B&B	MATCHED SPECIMENS
TA	9	Redmond American Linden	Tilia americana 'Redmond'	2" Cal.	B&B	MATCHED SPECIMENS
UP	6	Lacebark Elm	Ulmus parvifolia	2" Cal.	B&B	MATCHED SPECIMENS
EVERGREEN TREES						
AC	4	White Fir	Abies concolor	6` Ht.	B&B	FULL FORM TO GROUND
ORNAMENTAL TREES						
AB	3	Trident Maple	Acer buergerianum	1.5" Cal.	B&B	MATCHED SPECIMENS
CA3	3	American Hornbeam	Carpinus caroliniana	1.5" Cal.	B&B	MATCHED SPECIMENS
CL	3	Eastern Redbud Single Stem	Cercis canadensis	1.5" Cal.	B&B	MATCHED SPECIMENS
CR	3	Chinese Fringe Tree	Chionanthus retusus	1.5" Cal.	B&B	MATCHED SPECIMENS
CC	7	Thornless Cockspur Hawthorn	Crataegus crus-galli inermis	1.5" Cal.	B&B	MATCHED SPECIMENS
OV	6	American Hophornbeam	Ostrya virginiana	1.5" Cal.	B&B	MATCHED SPECIMENS
PV2	6	Vanessa Persian Parrotia	Parrotia persica 'Vanessa'	1.5" Cal.	B&B	MATCHED SPECIMENS
SHRUBS						
AM	73	Viking Black Chokeberry	Aronia melanocarpa 'Viking'	5 gal.	CONT	FULL FORM - MATCHED
CA2	79	Hummingbird Summersweet	Clethra alnifolia 'Hummingbird'	5 gal.	CONT	FULL FORM - MATCHED
CS	9	Cardinal Red Twig Dogwood	Cornus sericea 'Cardinal'	5 gal.	CONT	FULL FORM - MATCHED
CF2	9	Yellow Twig Dogwood	Cornus sericea 'Flaviramea'	5 gal.	CONT	FULL FORM - MATCHED
HO	15	Snow Queen Oakleaf Hydrangea	Hydrangea quercifolia 'Snow Queen'	5 gal.	CONT	FULL FORM - MATCHED
IV	54	Red Sprite Winterberry	Ilex verticillata 'Red Sprite'	5 gal.	CONT	FULL FORM - MATCHED
IM	72	Merlot Sweetspire	Itea virginica 'Merlot'	3 gal.	CONT	FULL FORM - MATCHED
PO	64	Little Devil™ Dwarf Ninebark	Physocarpus opulifolius 'Little Devil'	5 gal.	CONT	FULL FORM - MATCHED
RA2	76	Alpine Currant	Ribes alpinum	5 gal.	CONT	FULL FORM - MATCHED
TH	21	Hicks Anglo-Japanese Yew	Taxus x media 'Hicksii'	5 gal.	CONT	FULL FORM - MATCHED
GRASSES						
AB2	15	Blackhawks Big Bluestem	Andropogon gerardii 'Blackhawks'	1 gal.	CONT	FULLY ROOTED IN CONTAINER
CK	27	Karl Foerster Feather Reed Grass	Calamagrostis x acutiflora 'Karl Foerster'	1 gal.	CONT	FULLY ROOTED IN CONTAINER
PN	21	Northwind Switch Grass	Panicum virgatum 'Northwind'	1 gal.	CONT	FULLY ROOTED IN CONTAINER
SB2	54	Blaze Little Bluestem	Schizachyrium scoparium 'Blaze'	1 gal.	CONT	FULLY ROOTED IN CONTAINER
SI	12	Indian Steel Indian Grass	Sorghastrum nutans 'Indian Steel'	1 gal.	CONT	FULLY ROOTED IN CONTAINER
SH	12	Prairie Dropseed	Sporobolus heterolepis	1 gal.	CONT	FULLY ROOTED IN CONTAINER
GROUNDCOVERS						
JB	279	Blue Rug Juniper	Juniperus horizontalis 'Blue Rug'	1 gal.	CONT	FULLY ROOTED IN CONTAINER

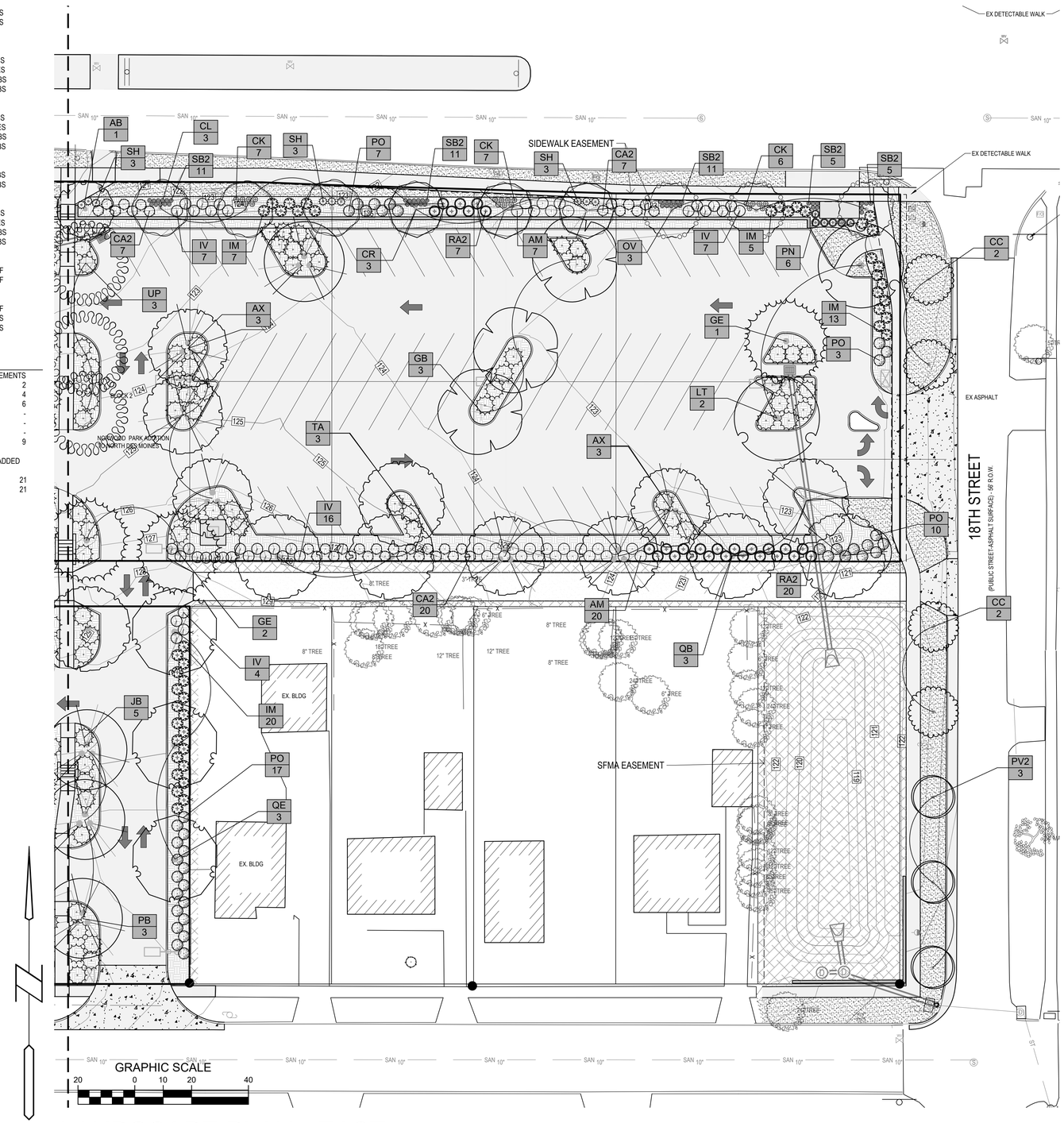

LANDSCAPE PLAN - EAST

I HEREBY CERTIFY THAT THESE PLANS AND SPECIFICATIONS WERE PREPARED BY ME OR UNDER MY DIRECT PERSONAL SUPERVISION AND THAT I AM A DULY LICENSED PROFESSIONAL LANDSCAPE ARCHITECT UNDER THE LAWS OF THE STATE OF IOWA. IOWA REGISTRATION NO. 700.

BY: DOUGLAS M. ROONEY LICENSE RENEWAL DATE: JUNE 30, 2026

SIGNED: _____ DATE: _____

STATE OF IOWA Douglas M. Rooney LANDSCAPE ARCHITECT 700 PROFESSIONAL LANDSCAPE ARCHITECT

BISHOP ENGINEERING +
3501 104th Street, Urbandale, IA 50322 Ph: 515-276-0467

SITE PLAN
BROADLAWNS PARKING LOT EXPANSION
1826 HICKMAN ROAD
DES MOINES, IA 50314

REFERENCE NUMBER:

DRAWN BY: LCR

REVISION DATE:
1ST CITY SUB: 2026-05-13
2ND CITY SUB: 2026-07-27
90% CD SET: 2026-08-25
100% BID SET: 2026-09-10

PROJECT NUMBER: 240308-1

SHEET NAME: LANDSCAPE PLAN EAST

SHEET NUMBER: C5.1

9/10/2026 9:37:34 AM L:\LAND PROJECTS 2024\240308-1 BROADLAWNS PARKING LOT EXPANSION\DWG\C5.LANDSCAPE.DWG

PRELIMINARY- NOT FOR CONSTRUCTION

9/10/2026 9:38:13 AM L:\LAND PROJECTS 2024\240308-1 BROADLAWNS PARKING LOT EXPANSION\DWG\C5 LANDSCAPE.DWG

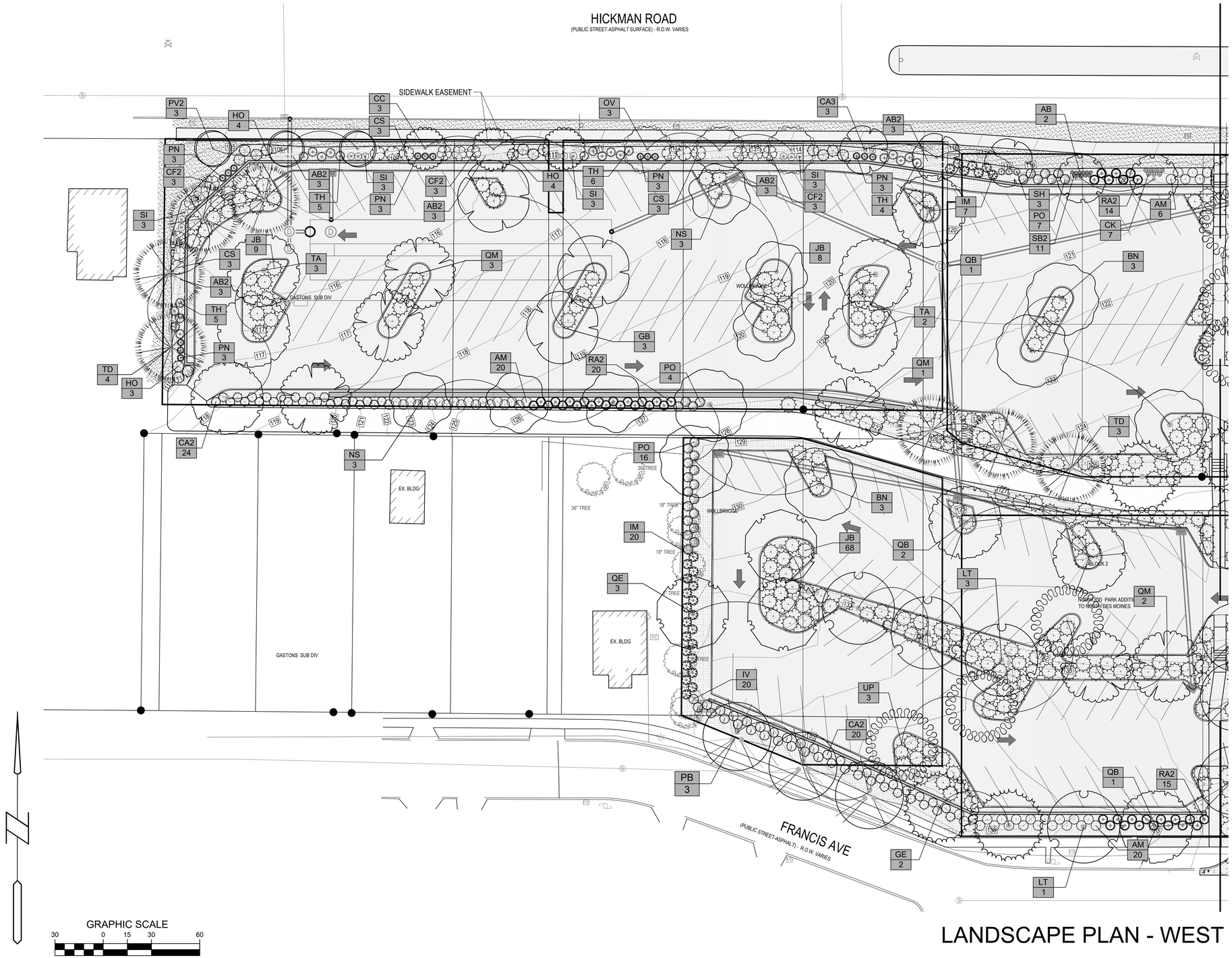

LANDSCAPE PLAN - WEST

BISHOP ENGINEERING +
3501 104th Street, Urbandale, IA 50322 Ph: 515-276-0467

SITE PLAN
BROADLAWNS PARKING LOT EXPANSION
1826 HICKMAN ROAD
DES MOINES, IA 50314

REFERENCE NUMBER:

DRAWN BY:
LCR

REVISION DATE:
1ST CITY SUB: 2026-05-13
2ND CITY SUB: 2026-07-27
90% CD SET: 2026-08-25
100% BID SET: 2026-09-10

PROJECT NUMBER:
240308-1

SHEET NAME:
LANDSCAPE PLAN WEST

SHEET NUMBER:
C5.2

PRELIMINARY- NOT FOR CONSTRUCTION

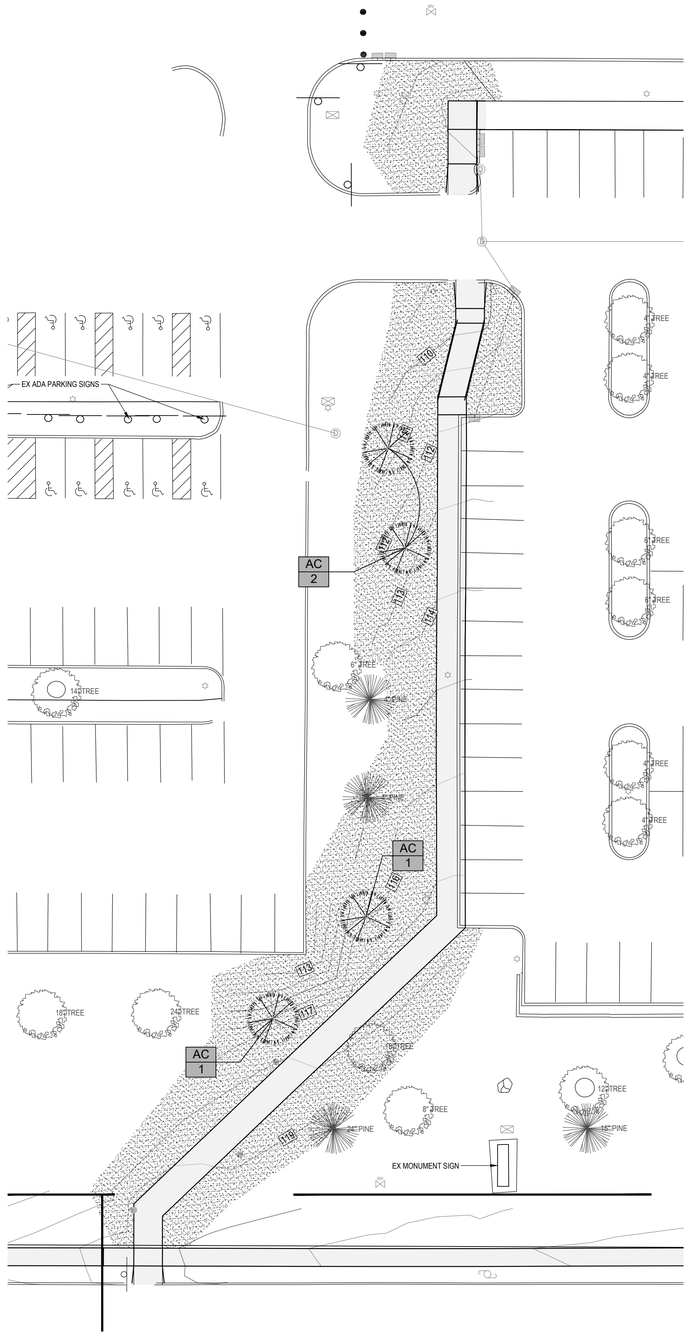

NORTH OF HICKMAN CONNECTOR WALK

STAKING ORIENTATION

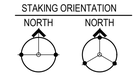

2 STAKES - 3" CAL. & LESS
3 STAKES - GREATER THAN 3" CAL.

USE HOSE GUARDS AROUND TRUNK ON STAKING WIRE. TIE WIRE TO STEEL POSTS PLACED OUTSIDE PLANT PIT..

LEAVE STAKES IN PLACE NO MORE THAN 1 YEAR FROM INSTALLATION. CONTRACTOR RESPONSIBLE FOR REMOVAL.

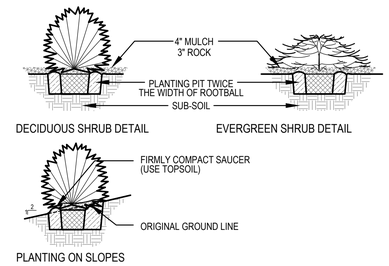

3 C-5.2 SHRUB PLANTING (TYP)
SCALE: NOT TO SCALE

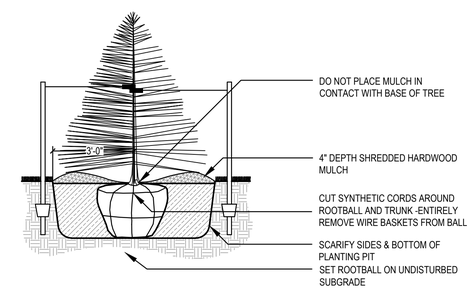

2 C-5.2 EVERGREEN TREE PLANTING (B&B)
SCALE: NOT TO SCALE

NOTES:

- CONTACT THE MUNICIPAL FORESTRY DIVISION PRIOR TO PLANTING IN THE PUBLIC R.O.W. AT 515-283-4950.
- ALL WIRE, TWINE, AND BURLAP SHALL BE REMOVED FROM THE ROOTBALL OF STREET TREES PRIOR TO PLANTING.
- NO STAKING OF STREET TREES IS ALLOWED.

STEP 1 - PEEL BACK ROPE/BURLAP/CAGE AND REMOVE SUFFICIENT SOIL TO EXPOSE ROOT FLARE.

STEP 2 - MEASURE FROM ROOT FLARE TO BOTTOM OF ROOT BALL.

STEP 3 - DIG HOLE TO DEPTH WHERE TOPMOST ROOTS ARE BURIED 1-2 INCHES AND THE ROOT FLARE SITS SLIGHTLY ABOVE GROUND LEVEL. DIG A HOLE 2-3 TIMES WIDER THAN THE DIAMETER OF THE ROOT BALL WITH SLOPING SIDES TO ALLOW FOR PROPER ROOT GROWTH.

STEP 4 - REMOVE LOWER THIRD OF WIRE CAGE.

STEP 5 - SET TREE IN HOLE. SUPPORT WITH SOME SOIL. ENSURE THAT IT'S STRAIGHT, THEN REMOVE ENTIRE WIRE CAGE AND TOP TWO-THIRDS OF BURLAP.

STEP 6 - BACKFILL WITH TWO-THIRDS OF LOOSE NATIVE SOIL (UNLESS IT'S ALL CLAY) AND USE WATER TO SETTLE. DO NOT TAMP OR STEP ON SOIL.

STEP 7 - BACKFILL BALANCE AND WATER AGAIN. EXCESS SOIL MAY BE USED TO CREATE A BERM/SAUCER OUTSIDE OF ROOT BALL.

STEP 8 - ADD 2-4 INCHES OF WOOD MULCH, LEAVING A 1- TO 2-INCH CLEARANCE BETWEEN THE MULCH AND THE TRUNK.

STEP 9 - WATER A FINAL TIME.

STEP 10 - IF NECESSARY, PLACE TWO OPPOSING STEEL T-STAKES OUTSIDE THE ROOT BALL WITH ARBOR TIE SECURING TREE. TIES PREFERRED ON LOWER HALF OF TRUNK TO ALLOW MOVEMENT.

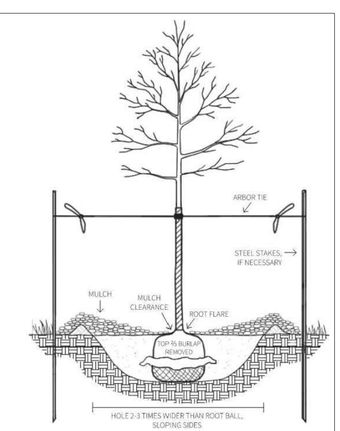

1 C-5.2 DECIDUOUS TREE PLANTING (TYP.)
SCALE: NOT TO SCALE

BISHOP ENGINEERING +
3501 104th Street, Urbandale, IA 50322 Ph: 515-276-0467

SITE PLAN
BROADLAWNS PARKING LOT EXPANSION
1826 HICKMAN ROAD
DES MOINES, IA 50314

REFERENCE NUMBER:

DRAWN BY: LCR

REVISION DATE:
1ST CITY SUB: 2026-05-13
2ND CITY SUB: 2026-07-27
90% CD SET: 2026-08-25
100% BID SET: 2026-09-10

PROJECT NUMBER: 240308-1

SHEET NAME: LANDSCAPE PLAN NORTH AND DETAILS

SHEET NUMBER: C5.3

9/10/2026 9:36:36 AM L:\LAND PROJECTS 2024\240308-1 BROADLAWNS PARKING LOT EXPANSION\DWG\C5 LANDSCAPE.DWG

PRELIMINARY- NOT FOR CONSTRUCTION

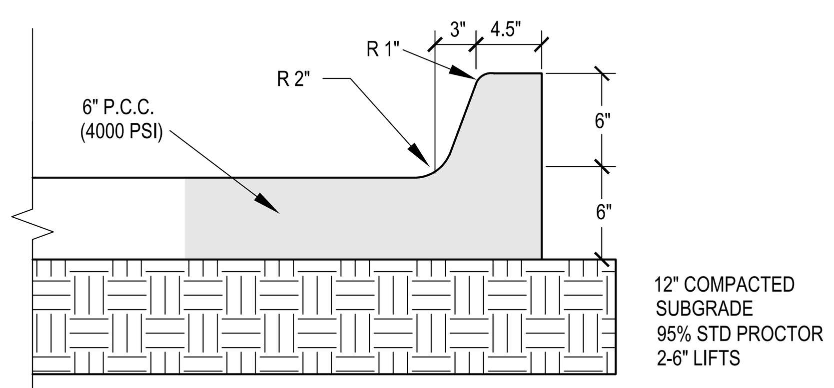

1 / C6.1 STD. P.C.C. PAVING & CURB DETAIL
NOT TO SCALE

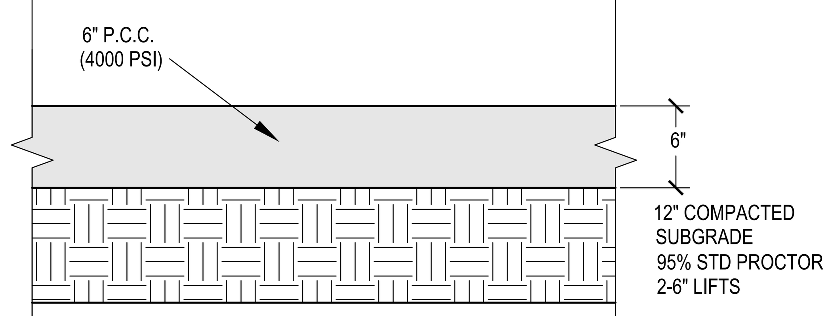

2 / C6.1 STD. P.C.C. PAVING DETAIL
NOT TO SCALE

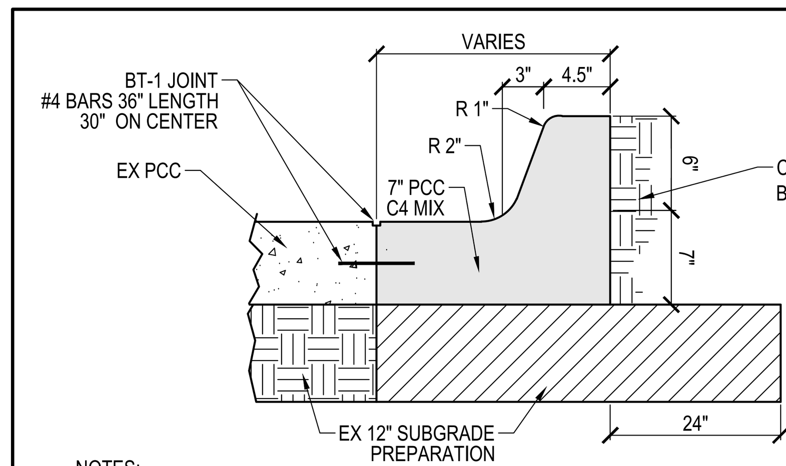

NOTES:
1. SLOPE GUTTER IN ACCORDANCE WITH GRADING PLAN.
2. INSTALL CURB & GUTTER INTERGRAL WITH PAVING.
3. PCC PAVEMENT SHALL HAVE A MINIMUM 28 DAY COMPRESSIVE STRENGTH OF 4,000 PSI.

3 / C6.1 CURB & GUTTER SECTION
NOT TO SCALE

NOTE: SLOPE SIDEWALK IN ACCORDANCE WITH GRADING PLAN, 1.5% CROSS SLOPE

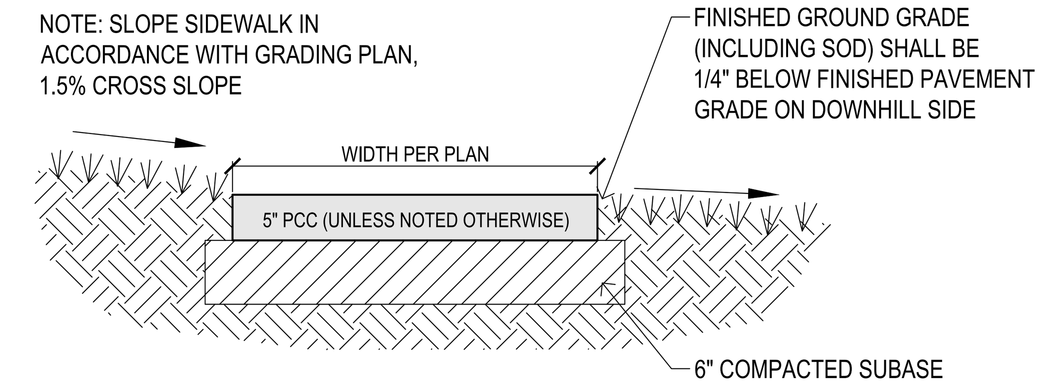

4 / C6.1 SIDEWALK DETAIL
NOT TO SCALE

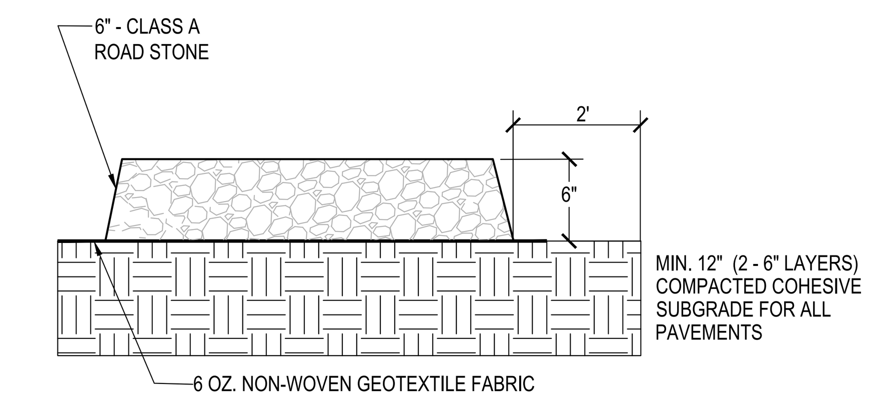

5 / C6.1 GRAVEL SECTION
NOT TO SCALE

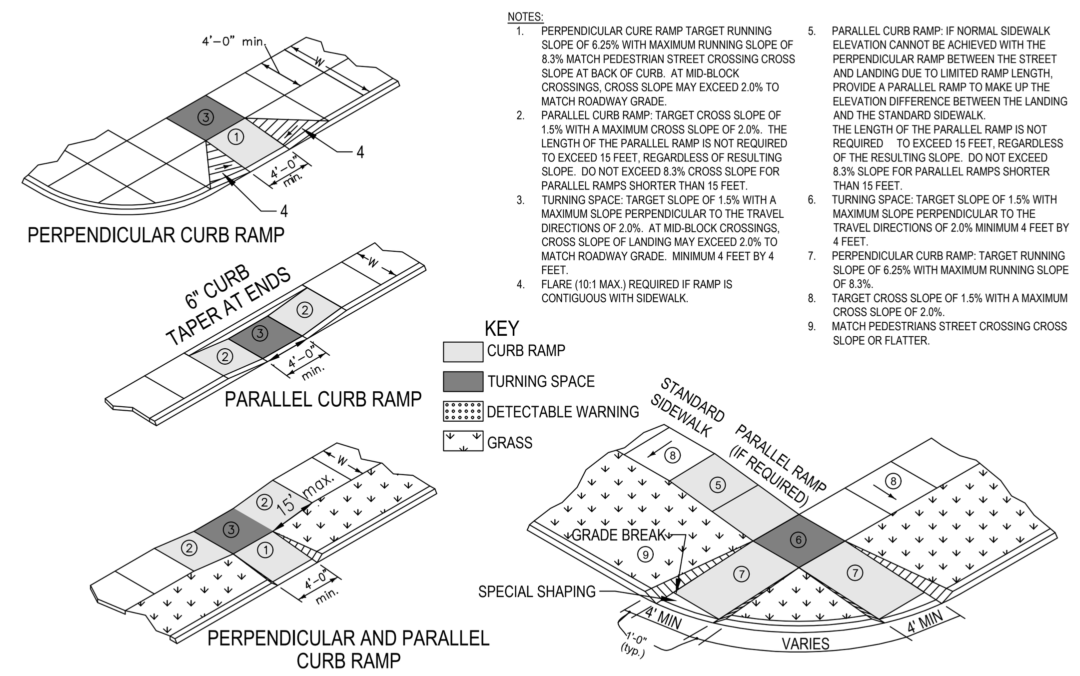

NOTES:
1. PERPENDICULAR CURE RAMP TARGET RUNNING SLOPE OF 6.25% WITH MAXIMUM RUNNING SLOPE OF 8.3% MATCH PEDESTRIAN STREET CROSSING CROSS SLOPE AT BACK OF CURB. AT MID-BLOCK CROSSINGS, CROSS SLOPE MAY EXCEED 2.0% TO MATCH ROADWAY GRADE.
2. PARALLEL CURB RAMP: TARGET CROSS SLOPE OF 1.5% WITH A MAXIMUM CROSS SLOPE OF 2.0%. THE LENGTH OF THE PARALLEL RAMP IS NOT REQUIRED TO EXCEED 15 FEET, REGARDLESS OF RESULTING SLOPE. DO NOT EXCEED 8.3% CROSS SLOPE FOR PARALLEL RAMPS SHORTER THAN 15 FEET.
3. TURNING SPACE: TARGET SLOPE OF 1.5% WITH A MAXIMUM SLOPE PERPENDICULAR TO THE TRAVEL DIRECTIONS OF 2.0%. AT MID-BLOCK CROSSINGS, CROSS SLOPE OF LANDING MAY EXCEED 2.0% TO MATCH ROADWAY GRADE. MINIMUM 4 FEET BY 4 FEET.
4. FLARE (10:1 MAX.) REQUIRED IF RAMP IS CONTIGUOUS WITH SIDEWALK.
5. PARALLEL CURB RAMP: IF NORMAL SIDEWALK ELEVATION CANNOT BE ACHIEVED WITH THE PERPENDICULAR RAMP BETWEEN THE STREET AND LANDING DUE TO LIMITED RAMP LENGTH, PROVIDE A PARALLEL RAMP TO MAKE UP THE ELEVATION DIFFERENCE BETWEEN THE LANDING AND THE STANDARD SIDEWALK. THE LENGTH OF THE PARALLEL RAMP IS NOT REQUIRED TO EXCEED 15 FEET, REGARDLESS OF THE RESULTING SLOPE. DO NOT EXCEED 8.3% SLOPE FOR PARALLEL RAMPS SHORTER THAN 15 FEET.
6. TURNING SPACE: TARGET SLOPE OF 1.5% WITH MAXIMUM SLOPE PERPENDICULAR TO THE TRAVEL DIRECTIONS OF 2.0% MINIMUM 4 FEET BY 4 FEET.
7. PERPENDICULAR CURB RAMP: TARGET RUNNING SLOPE OF 6.25% WITH MAXIMUM RUNNING SLOPE OF 8.3%.
8. TARGET CROSS SLOPE OF 1.5% WITH A MAXIMUM CROSS SLOPE OF 2.0%.
9. MATCH PEDESTRIANS STREET CROSSING CROSS SLOPE OR FLATTER.

6 / C6.1 ADA RAMP DETAILS
SCALE NONE

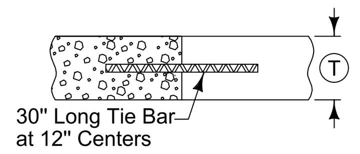

'DW' ① ② ③
DAY'S WORK JOINT (Non-working)

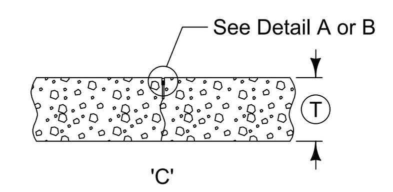

'C'
CONTRACTION JOINT

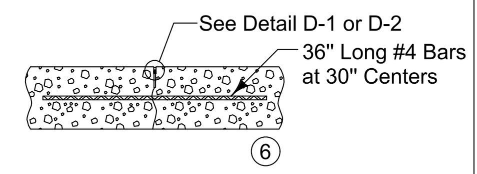

'L-1'
CONTRACTION JOINT

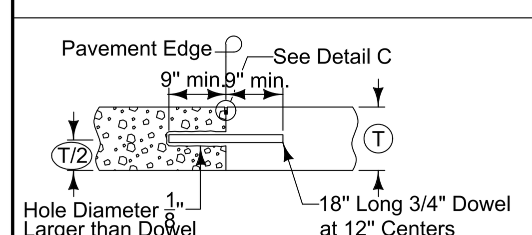

'RD' ⑦
ABUTTING PAVEMENT JOINT

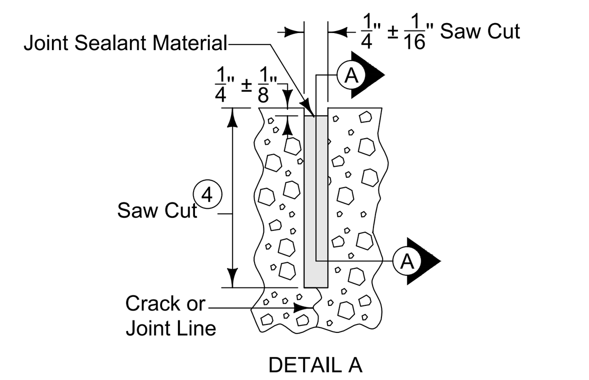

DETAIL A
(Saw cut formed by conventional concrete sawing equipment.)

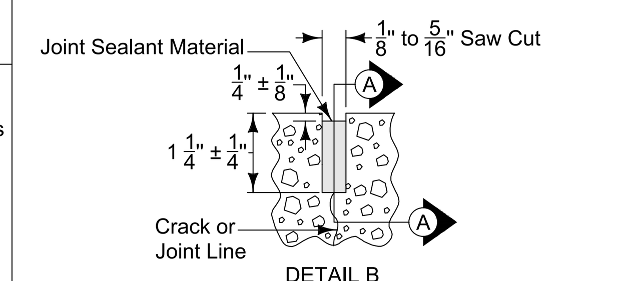

DETAIL B
(Saw cut formed by approved early concrete sawing equipment.)

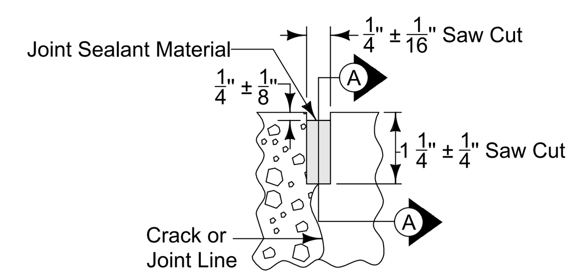

DETAIL C

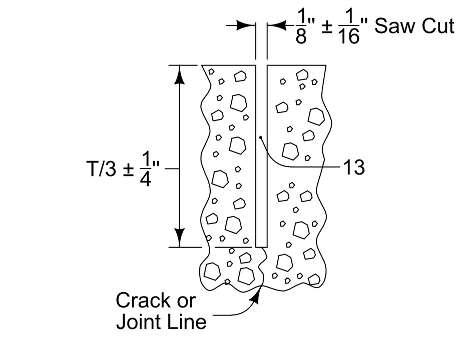

DETAIL D-1
(Required when the Department of Transportation is the Contracting Authority, or when specified in the contract documents.)

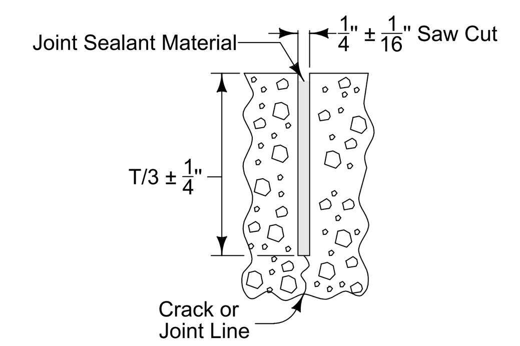

DETAIL D-2
(Required when the Department of Transportation is not the Contracting Authority, or when specified in the contract documents)

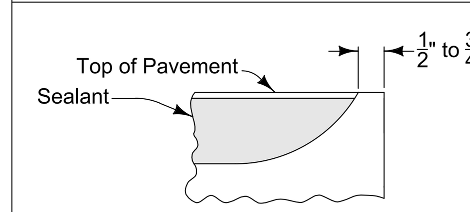

SECTION A-A
(Detail at Edge of Pavement)

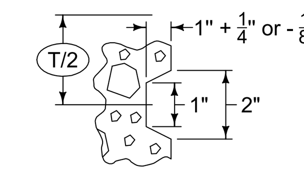

DETAIL E

1. Locate 'DW' joint at a mid-panel location between future 'C' or 'CD' joints. Place no closer than 5 feet to a 'C' or 'CD' joint.
2. Place bars within the limits shown under dowel assemblies.
3. 'RT' joint may be used in lieu of 'DW' joint at the end of the days work. Remove any pavement damaged due to the drilling at no additional cost to the Contracting Authority.
4. Saw 'C' joint to a depth of T/3.
5. Bar supports may be necessary for fixed form paving to ensure the bar remains in a horizontal position in the plastic concrete.
6. The following joints are interchangeable, subject to the pouring sequence:
   'BT-1' and 'L-1'
7. Edge with 1/4 inch tool for length of joint indicated if formed; edging not required when cut with diamond blade saw. Remove header block and board when second slab is placed.

7 / C6.1 JOINTING DETAILS
SCALE NONE

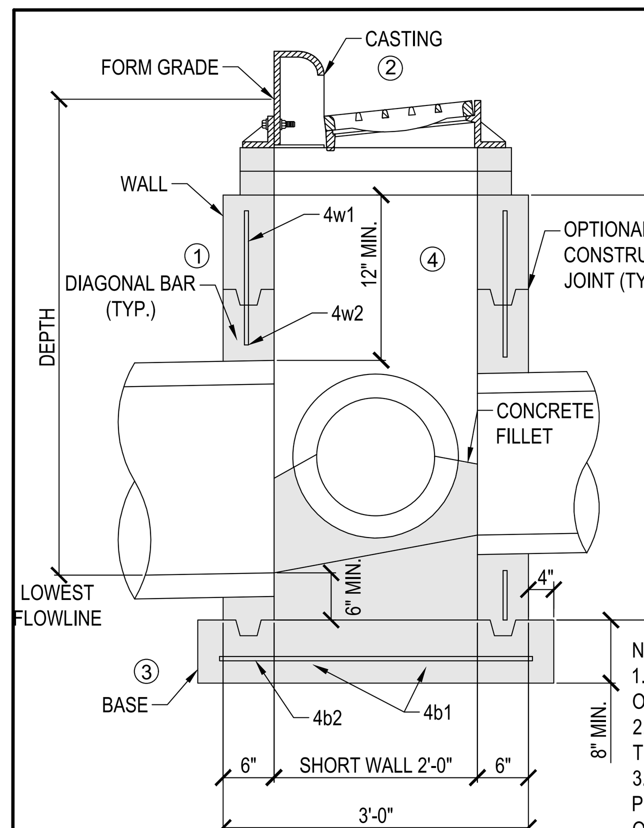

SECTION A-A

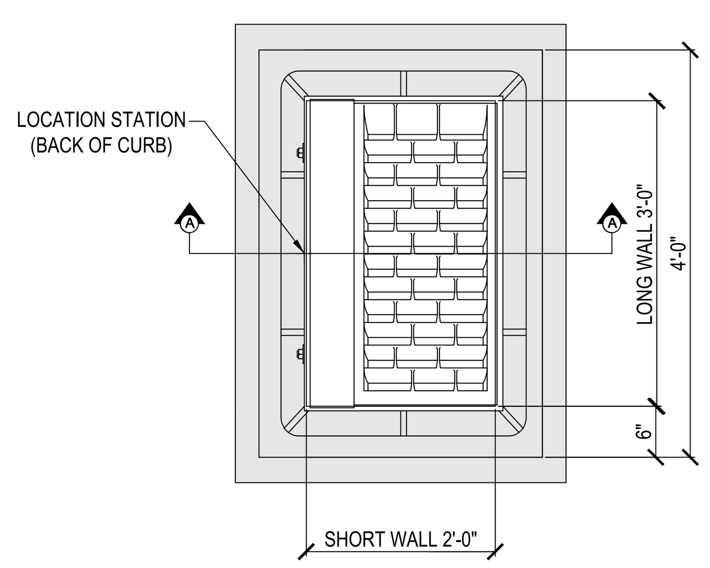

PLAN

NOTES:
1. INSTALL FOUR #4 DIAGONAL BARS AT ALL PIPE OPENINGS.
2. SW-603 TYPE R UNLESS TYPE Q IS SPECIFIED IN THE CONTRACT DOCUMENTS.
3. CAST-IN-PLACE BASE SHOWN. IF BASE IS PRECAST INTEGRAL WITH WALLS, THE FOOTPRINT OF THE BASE IS NOT REQUIRED TO EXTEND BEYOND THE OUTER EDGE OF THE WALLS.
4. 12 INCH MINIMUM WALL HEIGHT ABOVE ALL PIPES.

MAXIMUM PIPE DIAMETERS

Pipe Location	Precast Structure	Cast-in-place Structure
Short Wall	15"	18"
Long Wall	24"	30"

REINFORCING BAR LIST

Mark	Size	Location	Shape	Length	Count	Spacing
4w1	4	Walls	———	Wall Height minus 4"	14	12"
4w2	4	Long Walls	———	3'-8"	Varies	12"
4w3	4	Short Walls	———	2'-8"	Varies	12"
4b1	4	Base	———	4'-2"	4	10"
4b2	4	Base	———	3'-2"	5	10"

8 / C6.1 SW-501 SINGLE GRATE INTAKE DETAIL
NOT TO SCALE

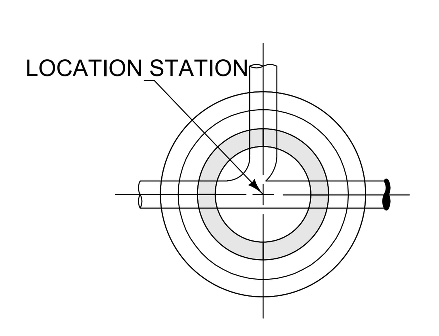

PLAN

Manhole Diameter (inches)	Maximum Pipe Diameter ② (inches) for 2 Pipes	
	At 180° Separation	At 90° Separation
48	24	18
60	36	24
72	42	30
84	48	36
96	60	42

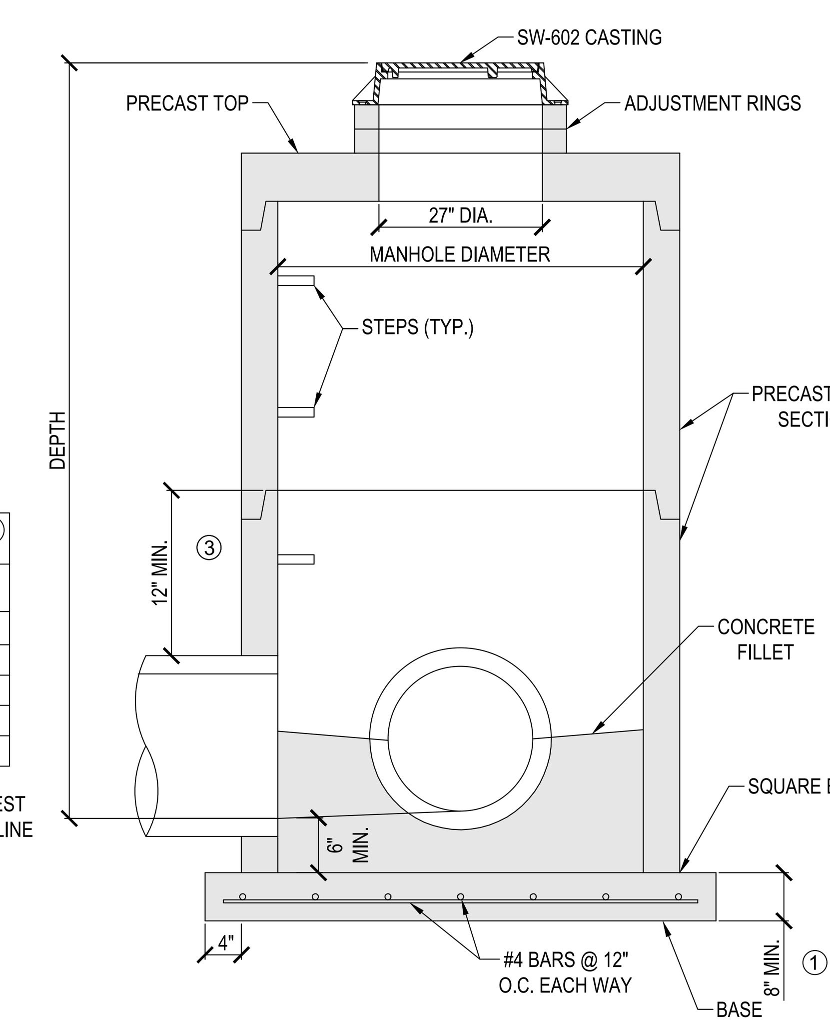

TYPICAL SECTION

9 / C6.1 SW-401 CIRCULAR STORM SEWER MANHOLE DETAIL
NOT TO SCALE

NOTES:
1. CAST-IN-PLACE BASE SHOWN. IF BASE IS PRECAST INTEGRAL WITH BOTTOM RISER, THE FOOTPRINT OF THE BASE IS NOT REQUIRED TO EXTEND BEYOND THE OUTER EDGE OF THE RISER.
2. FOR ADDITIONAL CONFIGURATIONS, MAINTAIN A MINIMUM OF 12 INCHES OF CONCRETE BETWEEN VERTICAL EDGES OF PIPE OPENINGS.
3. 12 INCH MINIMUM RISER HEIGHT ABOVE ALL PIPE OPENINGS.

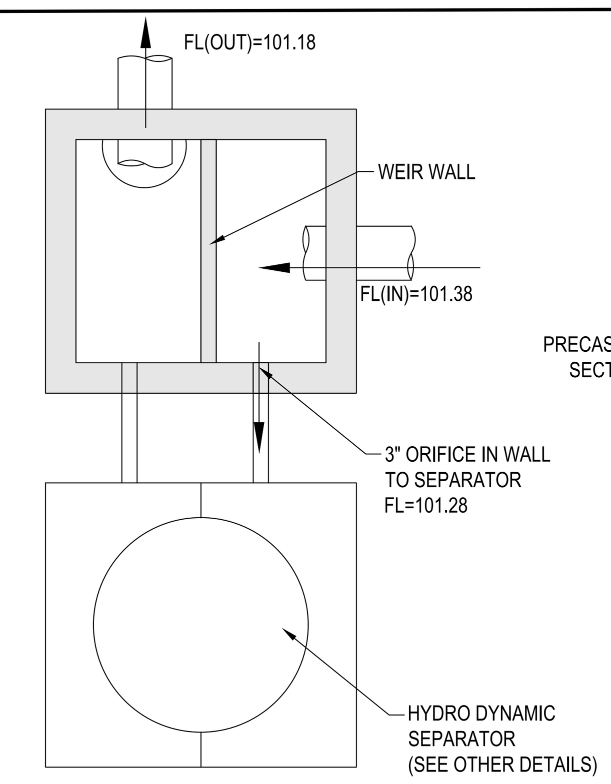

PLAN VIEW

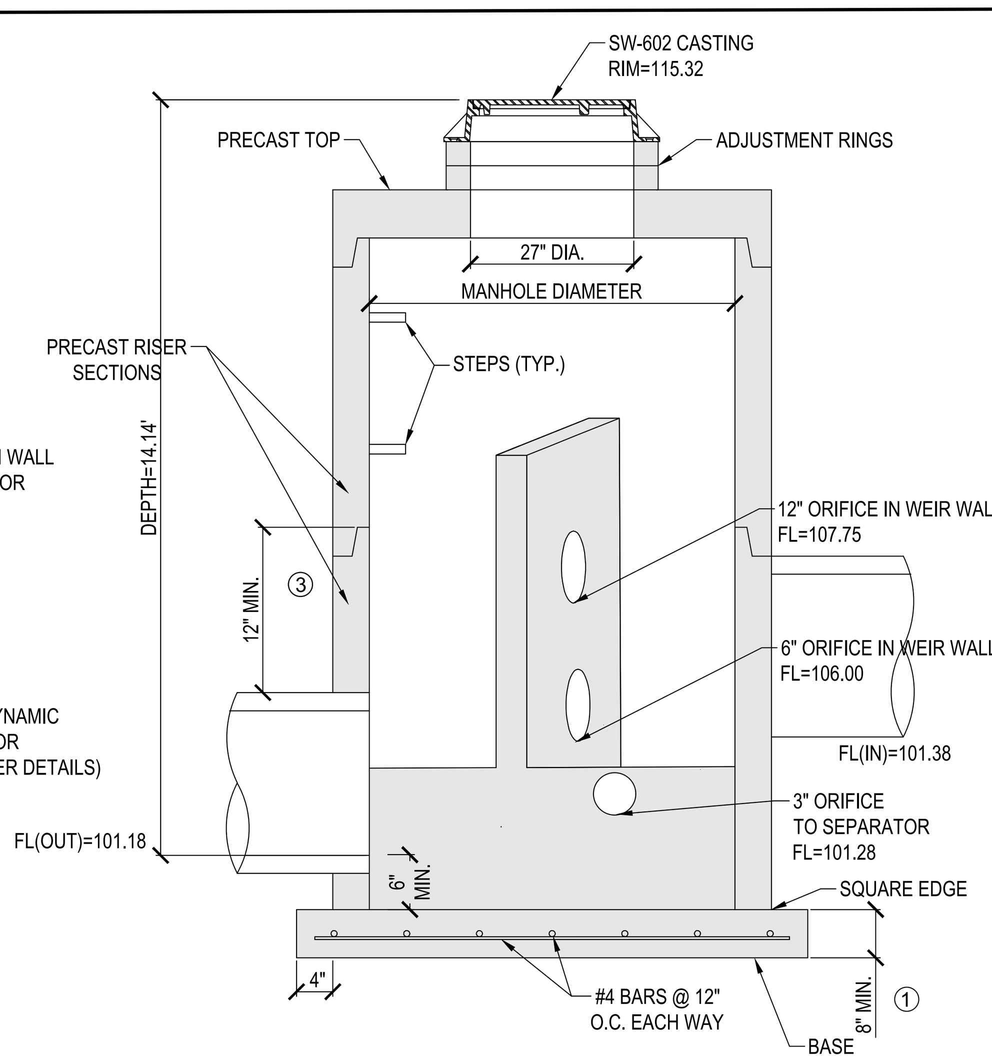

TYPICAL SECTION

10 / C6.1 UNDERGROUND DETENTION OUTLET STRUCTURE DETAIL
NOT TO SCALE

BISHOP ENGINEERING +
3501 104th Street, Urbandale, IA 50322 Ph: 515-276-0467

SITE PLAN
BROADLAWNS PARKING LOT EXPANSION
1826 HICKMAN ROAD
DES MOINES, IA 50314

REFERENCE NUMBER:

DRAWN BY:
LCR

REVISION DATE:
1ST CITY SUB: 2026-05-13
2ND CITY SUB: 2026-07-27
90% CD SET: 2026-08-25
100% BID SET: 2026-09-10

PROJECT NUMBER:
240308-1

SHEET NAME:
SITE DETAILS SHEET

SHEET NUMBER:
C6.1

9/9/2026 1:22:52 PM L:\LAND PROJECTS 2024\240308-1 BROADLAWNS PARKING LOT EXPANSION\DWG\C6 DETAILS.DWG

PRELIMINARY- NOT FOR CONSTRUCTION

1 / C6.2 SE DETENTION POND OUTLET STRUCTURE DETAIL

NOT TO SCALE

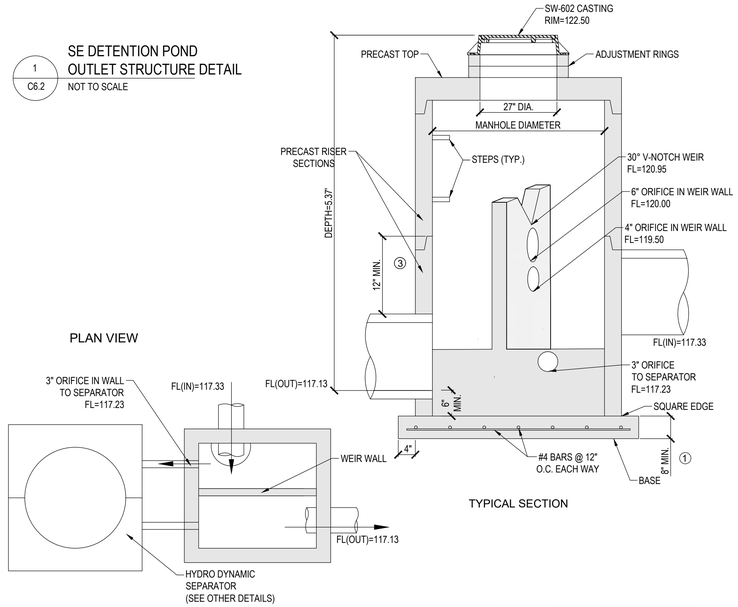

THIS DRAWING HAS BEEN GENERATED AND IS THE PROPERTY OF TOLAR MANUFACTURING CO. SHALL ONLY BE INCORPORATED AS DIRECTED BY TOLAR MANUFACTURING CO., INC'S ENGINEERING DEPT.

REVISIONS

ZONE	REV	DESCRIPTION	DATE	APPROVED

2 / C6.2 BUS STOP SHELTER DETAIL

NOT TO SCALE

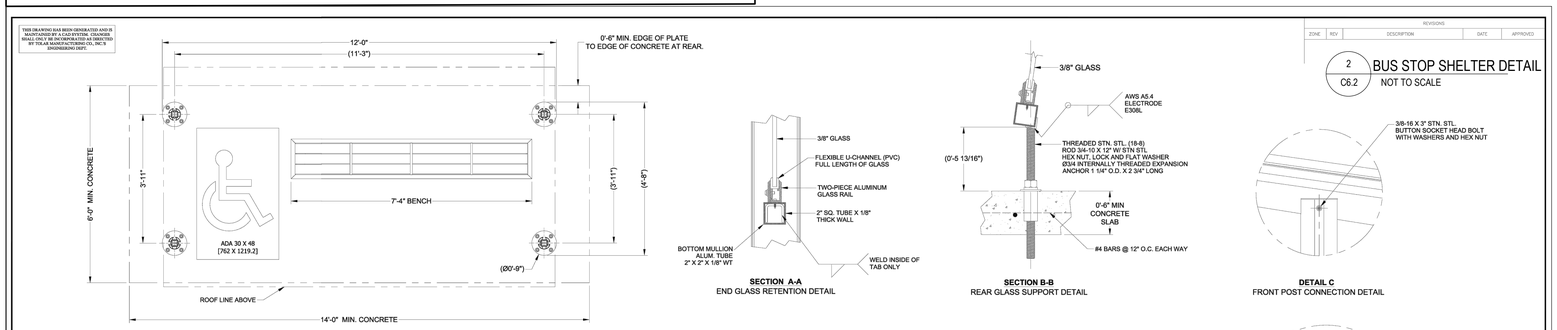

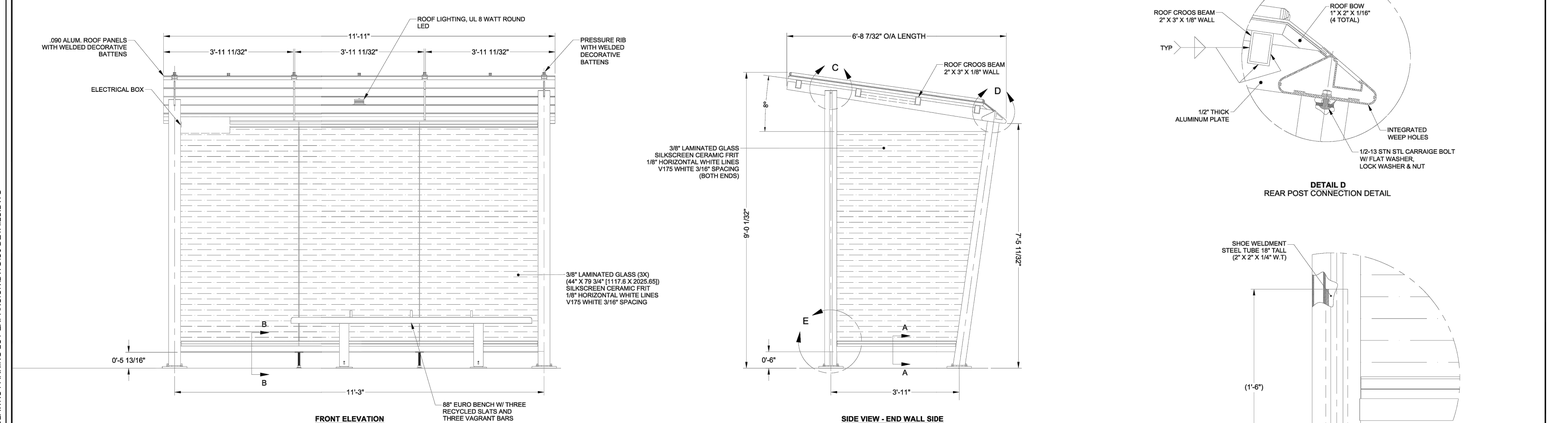

GENERAL NOTES:

1. ALL STRUCTURAL STEEL, UNLESS OTHERWISE NOTED, SHALL BE ASTM A-36, MINIMUM YIELD STRENGTH 36,000 PSI.
2. ALL STRUCTURAL ALUMINUM MEMBERS, UNLESS OTHERWISE NOTED, SHALL BE OF ALLOY 6063-T5 OR GREATER.
3. ALL HOLES TO BE DRILLED OR PUNCHED.
4. STEEL WELDING SHALL CONFORM TO AMERICAN WELDING SOCIETY STANDARD D1. 1-10. ELECTRODES SHALL CONFORM TO AWS 5.1, CLASS E70S-5.
5. ALUMINUM WELDING SHALL CONFORM TO AMERICAN WELDING SOCIETY STANDARD D1. 2-08. ELECTRODES SHALL CONFORM TO AWS/SFA 5.10 CLASS ER4043.
6. ALL WELDING TO BE DONE AT TOLAR MANUFACTURING COMPANY, INC. FACILITY.
7. ALL CORPORATE PROCEDURES, INCLUDING FABRICATION, MUST BE IN COMPLIANCE WITH TOLAR MANUFACTURING CO. INC'S QUALITY CONTROL MANUAL.
8. THE CONCRETE PAD SIZES SHOWN DO NOT INCLUDE ADA CLEAR PATH REQUIREMENTS.

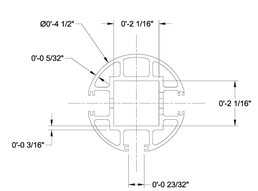

DETAIL POST EXTRUSION
SCALE 1 / 2

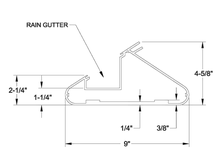

DETAIL BEAM EXTRUSION
SCALE 1 / 2

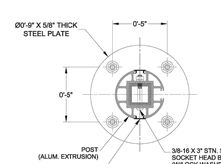

SECTION F-F

PROFESSIONAL ENGINEER
GARY LAMAR HOSTETLER
PE7894
12-31-24
IOWA

AS-BUILT CHANGES, REVISIONS, ADDITIONS, DELETIONS, ETC.		TOLAR	Tolar Manufacturing Company, Inc. 2318 Mariah Circle, Corona, CA 92878
COLOR/MATL		DESCRIPTION	12' NON AD ORION SHELTER
HALCO SED: #LVZ H.S.E: #LVZ H.S.D: #LVZ ANALCO: #LVZ		CUSTOMER/VENDOR	DES MOINES, IA
DEPTH: PL-DEPTH: DPM WALL: STDP: 11GA: FLAT WALL		DWG. NO.	42764-02 REV
THIRD ANGLE PROJECTION	SIZE D	WT.	
	SCALE 1/16	DATE 10/12/2021	DRAWN BY BFARR

THIS DRAWING IS THE PROPERTY OF TOLAR MANUFACTURING CO., INC. IT MAY NOT BE REPRODUCED OR DISTRIBUTED WITHOUT WRITTEN PERMISSION.

BISHOP ENGINEERING +
3501 104th Street, Urbandale, IA 50322 Ph: 515-276-0467

SITE PLAN
BROADLAWNS PARKING LOT EXPANSION
1826 HICKMAN ROAD
DES MOINES, IA 50314

REFERENCE NUMBER:

DRAWN BY:
LCR

REVISION DATE:
1ST CITY SUB: 2026-05-13
2ND CITY SUB: 2026-07-27
90% CD SET: 2026-08-25
100% BID SET: 2026-09-10

PROJECT NUMBER:
240308-1

SHEET NAME:
SITE DETAILS SHEET

SHEET NUMBER:
C6.2

PRELIMINARY - NOT FOR CONSTRUCTION

1 UNDERGROUND DETENTION SEPARATOR DETAIL
C6.3 NOT TO SCALE

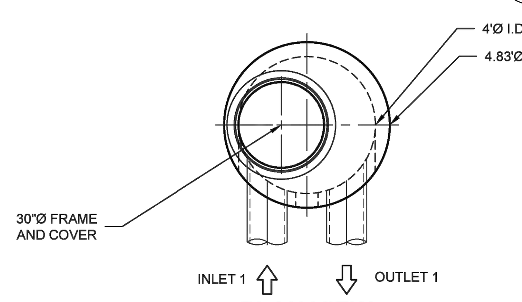

PLAN VIEW
INTERNALS NOT SHOWN

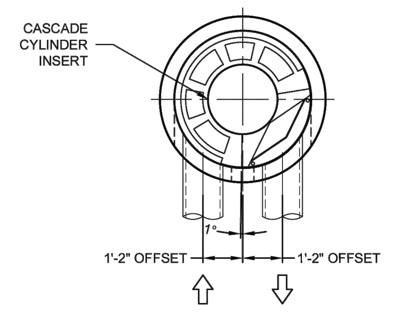

PLAN VIEW FOR PIPE ORIENTATION
TOP SLAB NOT SHOWN

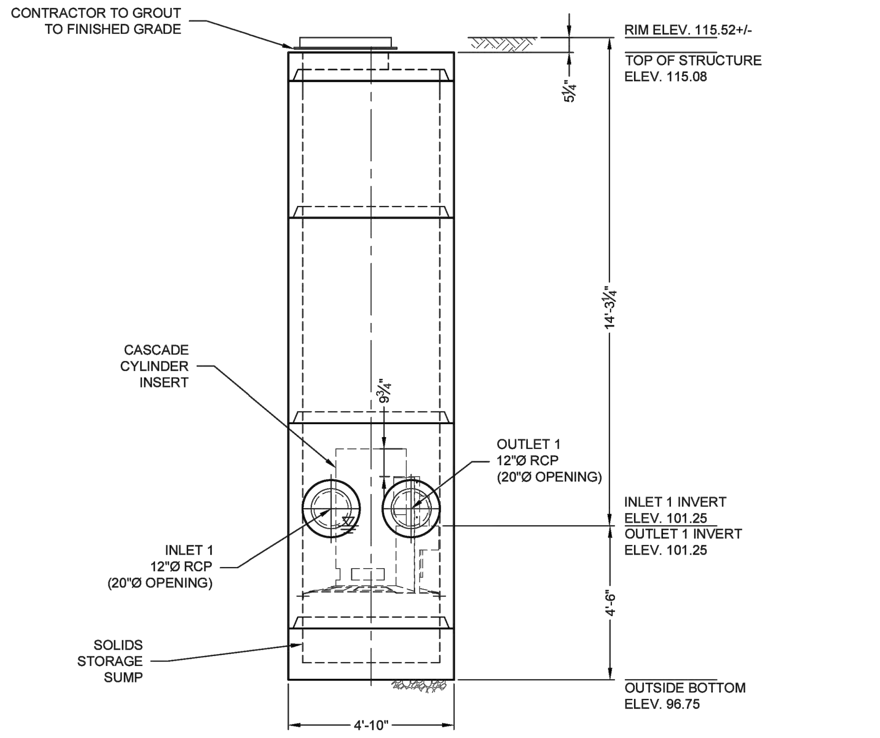

ELEVATION VIEW

C:\USERS\CADE.GRIMMETT\ONEDRIVE - THE QUIKRETE COMPANIES\DYNAMICS365 - CONTECH - PROJECTS\906630\PRODUCTS\10-CASCADE 4'\DRAWINGS\906630-10-CS-4-CONFAB.DWG 7/23/2026 2:14 PM

MATERIAL LIST - PROVIDED BY CONTECH

COUNT	DESCRIPTION	INSTALLED BY
1	CS-4 CYLINDER INSERT, STD.	CONTECH
4	CS-4 ALUMINUM INSTALLATION BRACKETS	CONTECH
1	CS-4 HARDWARE KIT	CONTECH
1	SEALANT FOR JOINTS	CONTRACTOR
1	30"Ø X 4" FRAME AND COVER, EJ #41600483, OR EQUIV.	CONTRACTOR

SITE DESIGN DATA

WATER QUALITY FLOW RATE	0.32 CFS
PEAK FLOW RATE	PER EOR
RETURN PERIOD OF PEAK FLOW	PER EOR

GENERAL NOTES
1. CONTECH TO PROVIDE ALL MATERIALS UNLESS NOTED OTHERWISE.
2. FOR FABRICATION DRAWINGS WITH DETAILED STRUCTURE DIMENSIONS AND WEIGHTS, PLEASE CONTACT YOUR CONTECH REPRESENTATIVE. www.ContechES.com
3. CASCADE SEPARATOR WATER QUALITY STRUCTURE SHALL BE IN ACCORDANCE WITH ALL DESIGN DATA AND INFORMATION CONTAINED IN THIS DRAWING. CONTRACTOR TO CONFIRM STRUCTURE MEETS REQUIREMENTS OF PROJECT.
4. STRUCTURE SHALL MEET AASHTO HS-20 LOAD RATING, ASSUMING EARTH COVER OF 0' - 2', AND GROUNDWATER ELEVATION AT, OR BELOW, THE OUTLET PIPE INVERT ELEVATION. ENGINEER OF RECORD TO CONFIRM ACTUAL GROUNDWATER ELEVATION. CASTINGS SHALL MEET AASHTO M306 AND BE CAST WITH THE CONTECH LOGO.
5. CASCADE SEPARATOR STRUCTURE SHALL BE PRECAST CONCRETE CONFORMING TO ASTM C-478 AND AASHTO LOAD FACTOR DESIGN METHOD.

INSTALLATION NOTES
A. ANY SUB-BASE, BACKFILL DEPTH, AND/OR ANTI-FLOTATION PROVISIONS ARE SITE-SPECIFIC DESIGN CONSIDERATIONS AND SHALL BE SPECIFIED BY ENGINEER OF RECORD.
B. CONTRACTOR TO PROVIDE EQUIPMENT WITH SUFFICIENT LIFTING AND REACH CAPACITY TO LIFT AND SET THE CASCADE SEPARATOR MANHOLE STRUCTURE.
C. CONTRACTOR TO ADD JOINT SEALANT BETWEEN ALL STRUCTURE SECTIONS, AND ASSEMBLE STRUCTURE.
D. CONTRACTOR TO PROVIDE, INSTALL, AND GROUT PIPES. MATCH PIPE INVERTS WITH ELEVATIONS SHOWN. ALL PIPE CENTERLINES TO MATCH PIPE OPENING CENTERLINES.
E. CONTRACTOR TO TAKE APPROPRIATE MEASURES TO ASSURE UNIT IS WATER TIGHT, HOLDING WATER TO FLOWLINE INVERT MINIMUM. IT IS SUGGESTED THAT ALL JOINTS BELOW PIPE INVERTS ARE GROUTED.

STRUCTURE WEIGHT
APPROXIMATE HEAVIEST PICK = 5500 LBS.
OF 5 PIECES

MAXIMUM FOOTPRINT = 4.83'Ø

CONTECH **PROPOSAL** DRAWING

RNK-MN
LAYOUT 1A

MARK	DATE	REVISION DESCRIPTION	BY

CS-4 - 906630-10
BROADLAWNS PARKING LOT EXPANSION
DES MOINES, IA
SITE DESIGNATION: STR #1A

CONTECH ENGINEERED SOLUTIONS LLC
www.ContechES.com
9100 Centre Pointe Dr., Suite 400, West Chester, OH 45069
800-338-1122 513-645-7000 513-645-7993 FAX
CASCADE separator®

DATE: 7/23/26	
DESIGNED: CJG	DRAWN: CJG
CHECKED: LJK	APPROVED: LJK
PROJECT No.: 906630	SEQUENCE No.: 10
SHEET: 1 OF 1	

1810B4 V1600-4 Assembly

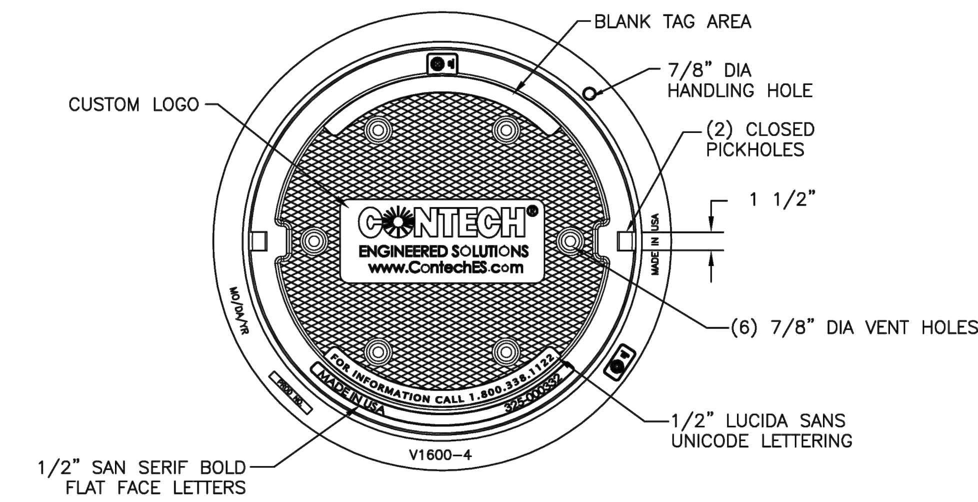

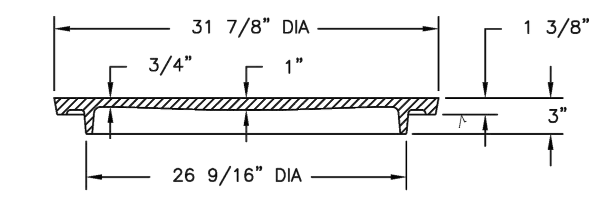

COVER SECTION

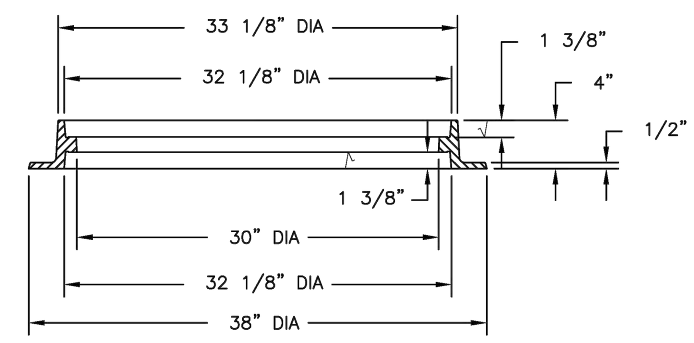

FRAME SECTION

Product Number
41600483
Design Features
-Materials
Cover
Gray Iron (CL35B)
Frame
Gray Iron (CL35B)

-Design Load
Heavy Duty
-Open Area
n/a
-Coating
Undipped
-√ Designates Machined Surface

Certification
-ASTM A48
-Country of Origin: USA

Major Components
00180783
41600410

Drawing Revision
05/09/2007 Designer: SMH
6/26/2017 Revised By: DAE

Disclaimer
Weights (lbs./kg) dimensions (inches/mm) and drawings provided for your guidance. We reserve the right to modify specifications without prior notice.
CONFIDENTIAL: This drawing is the property of EJ GROUP, Inc., and embodies confidential information, registered marks, patents, trade secret information, and/or know how that is the property of EJ GROUP, Inc. Copyright © 2012 EJ GROUP, Inc. All rights reserved.
Contact
800 626 4653
ejco.com

2 SE DETENION BASIN SEPARATOR DETAIL
C6.3 NOT TO SCALE

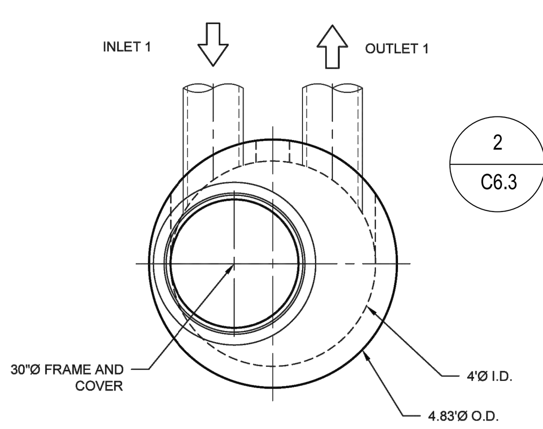

PLAN VIEW
INTERNALS NOT SHOWN

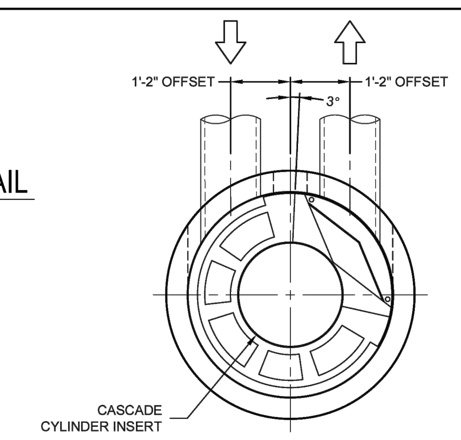

PLAN VIEW FOR PIPE ORIENTATION
TOP SLAB NOT SHOWN

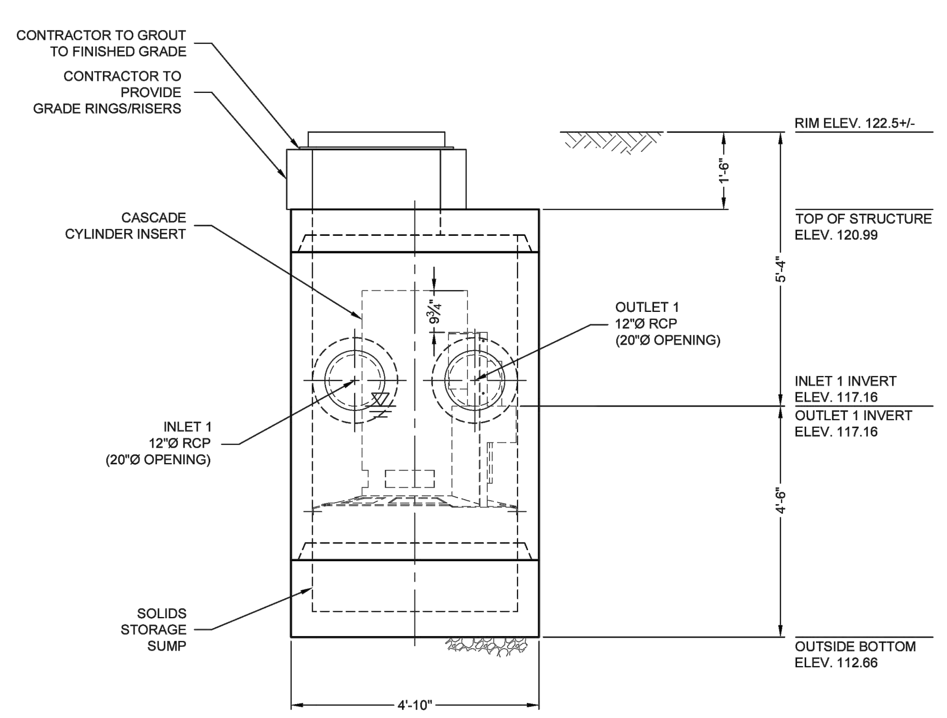

ELEVATION VIEW

C:\USERS\CADE.GRIMMETT\ONEDRIVE - THE QUIKRETE COMPANIES\DYNAMICS365 - CONTECH - PROJECTS\906630\PRODUCTS\15-CASCADE 4'\DRAWINGS\906630-15-CS-4-CONFAB.DWG 7/23/2026 2:02 PM

MATERIAL LIST - PROVIDED BY CONTECH

COUNT	DESCRIPTION	INSTALLED BY
1	CS-4 CYLINDER INSERT, STD.	CONTECH
4	CS-4 ALUMINUM INSTALLATION BRACKETS	CONTECH
1	CS-4 HARDWARE KIT	CONTECH
1	SEALANT FOR JOINTS	CONTRACTOR
1	30"Ø X 4" FRAME AND COVER, EJ #41600483, OR EQUIV.	CONTRACTOR

SITE DESIGN DATA

WATER QUALITY FLOW RATE	0.22 CFS
PEAK FLOW RATE	PER EOR
RETURN PERIOD OF PEAK FLOW	PER EOR

GENERAL NOTES
1. CONTECH TO PROVIDE ALL MATERIALS UNLESS NOTED OTHERWISE.
2. FOR FABRICATION DRAWINGS WITH DETAILED STRUCTURE DIMENSIONS AND WEIGHTS, PLEASE CONTACT YOUR CONTECH REPRESENTATIVE. www.ContechES.com
3. CASCADE SEPARATOR WATER QUALITY STRUCTURE SHALL BE IN ACCORDANCE WITH ALL DESIGN DATA AND INFORMATION CONTAINED IN THIS DRAWING. CONTRACTOR TO CONFIRM STRUCTURE MEETS REQUIREMENTS OF PROJECT.
4. STRUCTURE SHALL MEET AASHTO HS-20 LOAD RATING, ASSUMING EARTH COVER OF 0' - 2', AND GROUNDWATER ELEVATION AT, OR BELOW, THE OUTLET PIPE INVERT ELEVATION. ENGINEER OF RECORD TO CONFIRM ACTUAL GROUNDWATER ELEVATION. CASTINGS SHALL MEET AASHTO M306 AND BE CAST WITH THE CONTECH LOGO.
5. CASCADE SEPARATOR STRUCTURE SHALL BE PRECAST CONCRETE CONFORMING TO ASTM C-478 AND AASHTO LOAD FACTOR DESIGN METHOD.

INSTALLATION NOTES
A. ANY SUB-BASE, BACKFILL DEPTH, AND/OR ANTI-FLOTATION PROVISIONS ARE SITE-SPECIFIC DESIGN CONSIDERATIONS AND SHALL BE SPECIFIED BY ENGINEER OF RECORD.
B. CONTRACTOR TO PROVIDE EQUIPMENT WITH SUFFICIENT LIFTING AND REACH CAPACITY TO LIFT AND SET THE CASCADE SEPARATOR MANHOLE STRUCTURE.
C. CONTRACTOR TO ADD JOINT SEALANT BETWEEN ALL STRUCTURE SECTIONS, AND ASSEMBLE STRUCTURE.
D. CONTRACTOR TO PROVIDE, INSTALL, AND GROUT PIPES. MATCH PIPE INVERTS WITH ELEVATIONS SHOWN. ALL PIPE CENTERLINES TO MATCH PIPE OPENING CENTERLINES.
E. CONTRACTOR TO TAKE APPROPRIATE MEASURES TO ASSURE UNIT IS WATER TIGHT, HOLDING WATER TO FLOWLINE INVERT MINIMUM. IT IS SUGGESTED THAT ALL JOINTS BELOW PIPE INVERTS ARE GROUTED.

STRUCTURE WEIGHT
APPROXIMATE HEAVIEST PICK = 5500 LBS.
OF 3 PIECES

MAXIMUM FOOTPRINT = 4.83'Ø

CONTECH **PROPOSAL** DRAWING

RNK-MN
LAYOUT 1A

MARK	DATE	REVISION DESCRIPTION	BY

CS-4 - 906630-15
BROADLAWNS PARKING LOT EXPANSION
DES MOINES, IA
SITE DESIGNATION: STR #9B

CONTECH ENGINEERED SOLUTIONS LLC
www.ContechES.com
9100 Centre Pointe Dr., Suite 400, West Chester, OH 45069
800-338-1122 513-645-7000 513-645-7993 FAX
CASCADE separator®

DATE: 7/23/26	
DESIGNED: CJG	DRAWN: CJG
CHECKED: LJK	APPROVED: LJK
PROJECT No.: 906630	SEQUENCE No.: 15
SHEET: 1 OF 1	

1810B4 V1600-4 Assembly

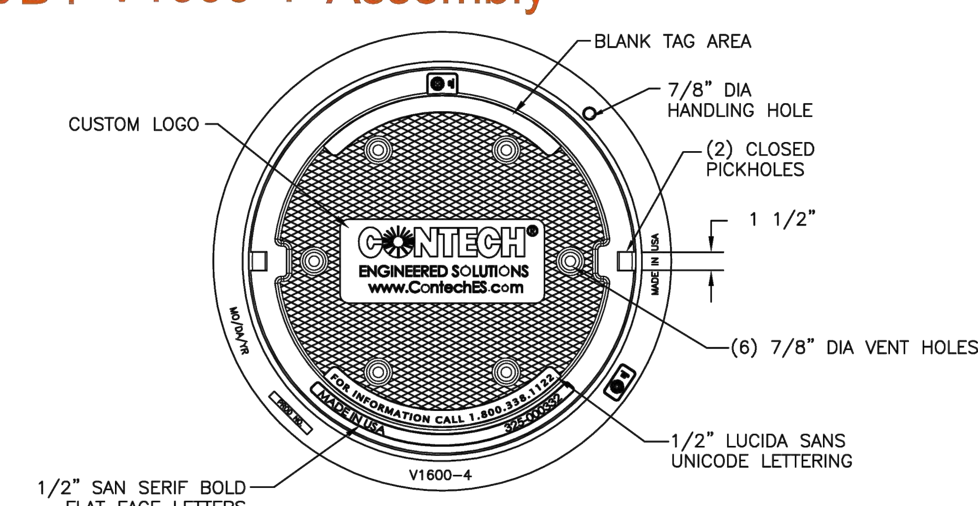

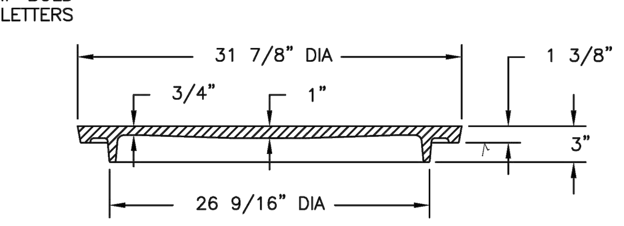

COVER SECTION

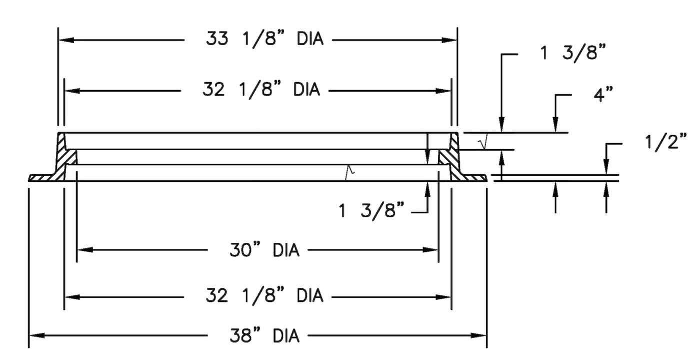

FRAME SECTION

Product Number
41600483
Design Features
-Materials
Cover
Gray Iron (CL35B)
Frame
Gray Iron (CL35B)

-Design Load
Heavy Duty
-Open Area
n/a
-Coating
Undipped
-√ Designates Machined Surface

Certification
-ASTM A48
-Country of Origin: USA

Major Components
00180783
41600410

Drawing Revision
05/09/2007 Designer: SMH
6/26/2017 Revised By: DAE

Disclaimer
Weights (lbs./kg) dimensions (inches/mm) and drawings provided for your guidance. We reserve the right to modify specifications without prior notice.
CONFIDENTIAL: This drawing is the property of EJ GROUP, Inc., and embodies confidential information, registered marks, patents, trade secret information, and/or know how that is the property of EJ GROUP, Inc. Copyright © 2012 EJ GROUP, Inc. All rights reserved.
Contact
800 626 4653
ejco.com

BISHOP ENGINEERING +
3501 104th Street, Urbandale, IA 50322 Ph: 515-276-0467

SITE PLAN
BROADLAWNS PARKING LOT EXPANSION
1826 HICKMAN ROAD
DES MOINES, IA 50314

REFERENCE NUMBER:

DRAWN BY: LCR

REVISION DATE:
1ST CITY SUB: 2026-05-13
2ND CITY SUB: 2026-07-27
90% CD SET: 2026-08-25
100% BID SET: 2026-09-10

PROJECT NUMBER: 240308-1

SHEET NAME: SITE DETAILS SHEET

SHEET NUMBER: C6.3

9/10/2026 9:49:25 AM L:\LAND PROJECTS 2024\240308-1 BROADLAWNS PARKING LOT EXPANSION\DWG\C6 DETAILS.DWG

PRELIMINARY - NOT FOR CONSTRUCTION

PROJECT SUMMARY

CALCULATION DETAILS
- LOADING = HS20HS25
- APPROX. LINEAR FOOTAGE = 255 LF

STORAGE SUMMARY
- STORAGE VOLUME REQUIRED = N/A
- PIPE STORAGE VOLUME = 20,028 CF
- BACKFILL STORAGE VOLUME = 0 CF
- TOTAL STORAGE PROVIDED = 20,028 CF

PIPE DETAILS
- DIAMETER = 120"
- CORRUGATION = 5x1
- GAGE = 12
- COATING = ALT2
- WALL TYPE = SOLID
- BARREL SPACING = 60"

BACKFILL DETAILS
- WIDTH AT ENDS = 12"
- ABOVE PIPE = 0"
- WIDTH AT SIDES = 12"
- BELOW PIPE = 0"

1 / C6.4 UNDERGROUND DETENTION DETAIL
NOT TO SCALE

NOTES
- ALL RISER AND STUB DIMENSIONS ARE TO CENTERLINE. ALL ELEVATIONS, DIMENSIONS, AND LOCATIONS OF RISERS AND INLETS, SHALL BE VERIFIED BY THE ENGINEER OF RECORD PRIOR TO RELEASING FOR FABRICATION.
- ALL FITTINGS AND REINFORCEMENT COMPLY WITH ASTM A998.
- ALL RISERS AND STUBS ARE $2\frac{2}{3}$" x $\frac{1}{2}$" CORRUGATION AND 16 GAGE UNLESS OTHERWISE NOTED.
- RISERS TO BE FIELD TRIMMED TO GRADE.
- QUANTITY OF PIPE SHOWN DOES NOT PROVIDE EXTRA PIPE FOR CONNECTING THE SYSTEM TO EXISTING PIPE OR DRAINAGE STRUCTURES. OUR SYSTEM AS DETAILED PROVIDES NOMINAL INLET AND/OR OUTLET PIPE STUB FOR CONNECTION TO EXISTING DRAINAGE FACILITIES. IF ADDITIONAL PIPE IS NEEDED IT IS THE RESPONSIBILITY OF THE CONTRACTOR.
- BAND TYPE TO BE DETERMINED UPON FINAL DESIGN.
- THE PROJECT SUMMARY IS REFLECTIVE OF THE DYODS DESIGN. QUANTITIES ARE APPROX. AND SHOULD BE VERIFIED UPON FINAL DESIGN AND APPROVAL. FOR EXAMPLE, TOTAL EXCAVATION DOES NOT CONSIDER ALL VARIABLES SUCH AS SHORING AND ONLY ACCOUNTS FOR MATERIAL WITHIN THE ESTIMATED EXCAVATION FOOTPRINT.
- THESE DRAWINGS ARE FOR CONCEPTUAL PURPOSES AND DO NOT REFLECT ANY LOCAL PREFERENCES OR REGULATIONS. PLEASE CONTACT YOUR LOCAL CONTECH REP FOR MODIFICATIONS.

ASSEMBLY
SCALE: 1" = 20'

The design and information shown on this drawing is provided as a service to the project owner, engineer and contractor by Contech Engineered Solutions LLC ("Contech"). Neither this drawing, nor any part thereof, may be used, reproduced or modified in any manner without the prior written consent of Contech. Failure to comply is done at the user's own risk and Contech expressly disclaims any liability or responsibility for such use.

If discrepancies between the supplied information upon which the drawing is based and actual field conditions are encountered as the work progresses, these discrepancies must be reported to Contech immediately for re-evaluation of the design. Contech accepts no liability for designs based on missing, incomplete or inaccurate information supplied by others.

DATE	REVISION DESCRIPTION	BY

CONTECH® ENGINEERED SOLUTIONS LLC
www.ContechES.com
9025 Centre Pointe Dr., Suite 400, West Chester, OH 45069
800-338-1122 513-645-7000 513-645-7993 FAX

CONTECH® CMP DETENTION SYSTEMS
CONTECH DYODS DRAWING

DYO630325 Broadlawns Parking Lot Expansion
Underground Detention System 7/24/26
Des Moines, IA
DETENTION SYSTEM

PROJECT No.: 96575	SEQ. No.: 630325	DATE: 7/24/2026
DESIGNED: DYO	DRAWN: DYO	
CHECKED: DYO	APPROVED: DYO	
SHEET NO.: 1		

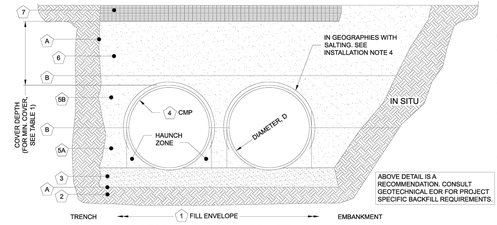

MINIMUM WIDTH DEPENDS ON SITE CONDITIONS AND ENGINEERING JUDGEMENT

TABLE 1:

DIAMETER, D	MIN. COVER	CORR. PROFILE
6"-10"	12"	1 1/2" x 1/4"
12"-48"	12"	2 2/3" x 1/2"
>48"-96"	12"	3" x 1", 5" x 1"
>96"	D/8	3" x 1", 5" x 1"

- STRUCTURAL BACKFILL MUST EXTEND TO LIMITS OF THE TABLE
- TOTAL HEIGHT OF COMPACTED COVER FOR CONVENTIONAL HIGHWAY LOADS IS MEASURED FROM TOP OF PIPE TO BOTTOM OF FLEXIBLE PAVEMENT OR TOP OF RIGID PAVEMENT
- ULTRA FLO ALSO AVAILABLE FOR SIZES 18" - 120" WITH 3/4"x 3/4"x 7 1/2" CORRUGATION

INSTALLATION NOTES
1. WHEN PLACING THE FIRST LIFTS OF BACKFILL IT IS IMPORTANT TO MAKE SURE THAT THE BACKFILL IS PROPERLY COMPACTED UNDER AND AROUND THE PIPE HAUNCHES.
2. OTHER ALTERNATE BACKFILL MATERIAL MAY BE ALLOWED DEPENDING ON SITE SPECIFIC CONDITIONS, AS APPROVED BY SITE ENGINEER.
3. BACKFILL USING CONTROLLED LOW-STRENGTH MATERIAL (CLSM, "FLASH FILL" OR "FLOWABLE FILL") MAY BE USED WHEN THE SPACING BETWEEN THE PIPES WILL NOT ALLOW FOR PLACEMENT AND ADEQUATE COMPACTION OF THE BACKFILL. CONTACT CONTECH FOR FURTHER EVALUATION.
4. IF SALTING AGENTS FOR SNOW AND ICE REMOVAL ARE USED ON OR NEAR THE PROJECT, A GEOMEMBRANE BARRIER IS RECOMMENDED OVER THE UPPER HALF OF THE PIPE. THE GEOMEMBRANE LINER IS INTENDED TO HELP PROTECT THE SYSTEM FROM THE POTENTIAL ADVERSE EFFECTS THAT MAY RESULT FROM A CHANGE IN THE SURROUNDING ENVIRONMENT OVER A PERIOD OF TIME. PLEASE REFER TO THE CORRUGATED METAL PIPE DETENTION DESIGN GUIDE FOR ADDITIONAL INFORMATION.

TABLE 2: SOLID STANDARD

CMP DETENTION AND CMP DRAINAGE STANDARD BACKFILL SPECIFICATIONS

	MATERIAL LOCATION	MATERIAL SPECIFICATION	DESCRIPTION	
1	FILL ENVELOPE WIDTH	PER ENGINEER OF RECORD	MINIMUM TRENCH WIDTH MUST ALLOW ROOM FOR PROPER COMPACTION OF HAUNCH MATERIALS UNDER THE PIPE. THE SUGGESTED MINIMUM TRENCH WIDTH, OR EOR RECOMMENDATION: PIPE ≤ 12": D + 16" PIPE > 12": 1.5D + 12"	MINIMUM EMBANKMENT WIDTH (IN FEET) FOR INITIAL FILL ENVELOPE: PIPE < 24": 3.0D PIPE 24" - 144": D + 4'0" PIPE > 144": D + 10'0"
2	FOUNDATION	**AASHTO 26.5.2** OR PER ENGINEER OF RECORD	PRIOR TO PLACING THE BEDDING, THE FOUNDATION MUST BE CONSTRUCTED TO A UNIFORM AND STABLE GRADE. IN THE EVENT THAT UNSUITABLE FOUNDATION MATERIALS ARE ENCOUNTERED DURING EXCAVATION, THEY SHALL BE REMOVED AND FOUNDATION BROUGHT BACK TO GRADE WITH A FILL MATERIAL APPROVED BY THE ENGINEER OF RECORD.	
3	BEDDING	**AASHTO M 43: 3, 357, 4, 467, 5, 56, 57** (APPROVED REGIONAL EQUIVALENTS INCLUDE CA-7)	ENGINEER OF RECORD TO DETERMINE IF BEDDING IS REQUIRED. PIPE MAY BE PLACED ON THE TRENCH BOTTOM OF A RELATIVELY LOOSE, NATIVE SUITABLE WELL GRADED GRANULAR MATERIAL THAT IS ROUGHLY SHAPED TO FIT THE BOTTOM OF THE PIPE, 2" MIN DEPTH. THE BEDDING MATERIAL MAY BE SUITABLE FOUNDATION SOILS CONFORMING TO AASHTO SOIL CLASSIFICATIONS A1, A2, OR A3 WITH MAXIMUM PARTICLE SIZE OF 3" PER AASHTO 26.3.8.1	
4	CORRUGATED METAL PIPE			
5A	CRITICAL BACKFILL	**AASHTO M 145: A-1, A-2, A-3 ***	HAUNCH ZONE MATERIAL SHALL BE HAND SHOVELED OR SHOVEL SLICED INTO PLACE TO ALLOW FOR PROPER COMPACTION WITHOUT SOFT SPOTS. BACKFILL SHALL BE PLACED IN 8" +/- LOOSE LIFTS AND COMPACTED TO 90% STANDARD PROCTOR PER AASHTO T 99. BACKFILL SHALL BE PLACED SUCH THAT THERE IS NO MORE THAN A THREE LIFT (24") DIFFERENTIAL BETWEEN ANY OF THE PIPES AT ANY TIME DURING THE BACKFILL PROCESS. THE BACKFILL SHOULD BE ADVANCED ALONG THE LENGTH OF THE SYSTEM TO AVOID DIFFERENTIAL LOADING. WELL GRADED GRANULAR MATERIAL WHICH MAY CONTAIN SMALL AMOUNTS OF SILT OR CLAY AND MAXIMUM PARTICLE SIZE OF 3" (PER AASHTO 26.3.8.1 AND 12.4-1.3).	
5B	BACKFILL	**AASHTO M 145: A-1, A-2, A-3**		
6	COVER MATERIAL	UP TO MIN. COVER - SEE 5A AND 5B ABOVE ABOVE MIN. COVER - PER ENGINEER OF RECORD	COVER MATERIAL MAY INCLUDE NON-BITUMINOUS, GRANULAR ROAD BASE MATERIAL WITHIN MIN COVER LIMITS	
7	RIGID OR FLEXIBLE PAVEMENT (IF APPLICABLE)	PER ENGINEER OF RECORD	FLEXIBLE PAVEMENT SHOULD NOT BE COUNTED AS PART OF THE FILL HEIGHT OVER THE CMP. FINAL BACKFILL MATERIAL SELECTION AND COMPACTION REQUIREMENTS SHALL FOLLOW THE PROJECT PLANS AND SPECIFICATIONS PER THE ENGINEER OF RECORD.	
A	OPTIONAL SIDE GEOTEXTILE	NONE	GEOTEXTILE LAYER IS RECOMMENDED ON SIDES OF EXCAVATION TO PREVENT SOIL MIGRATION.	
B	OPTIONAL GEOTEXTILE BETWEEN LAYERS	NONE	IF SOIL TYPES DIFFER AT ANY POINT ABOVE PIPE INVERT, A GEOTEXTILE LAYER IS RECOMMENDED TO BE PLACED BETWEEN THE LAYERS TO PREVENT SOIL MIGRATION.	

NOTES:
- FOR MULTIPLE BARREL INSTALLATIONS, THE RECOMMENDED STANDARD SPACING BETWEEN PARALLEL PIPE RUNS SHALL BE THE PIPE DIAMETER /2 BUT NO LESS THAN 12" FOR DIAMETERS <72". FOR 72" AND LARGER DIAMETERS, THE MINIMUM SPACING IS 36". CONTACT YOUR CONTECH REPRESENTATIVE FOR NONSTANDARD SPACING.
- APPROVED REGIONAL EQUIVALENTS FOR SECTION 5A INCLUDE CA-7, CODOT #67, MIDOT 2G, 34G, OR 21AA STONE OR GRAVEL; #8; #57; MIDOT 6A, 2G, 3G, 34G.

MANUFACTURER RECOMMENDED BACKFILL
NOT TO SCALE

DYO630325 Broadlawns Parking Lot Expansion
Underground Detention System 7/24/26
Des Moines, IA
DETENTION SYSTEM

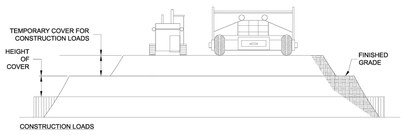

FOR TEMPORARY CONSTRUCTION VEHICLE LOADS, AN EXTRA AMOUNT OF COMPACTED COVER MAY BE REQUIRED OVER THE TOP OF THE PIPE. THE HEIGHT-OF-COVER SHALL MEET THE MINIMUM REQUIREMENTS SHOWN IN THE TABLE BELOW. THE USE OF HEAVY CONSTRUCTION EQUIPMENT NECESSITATES GREATER PROTECTION FOR THE PIPE THAN FINISHED GRADE COVER MINIMUMS FOR NORMAL HIGHWAY TRAFFIC.

PIPE SPAN, INCHES	AXLE LOADS (kips)			
	18-50	50-75	75-110	110-150
	MINIMUM COVER (FT)			
12-42	2.0	2.5	3.0	3.0
48-72	3.0	3.0	3.5	4.0
78-120	3.0	3.5	4.0	4.0
126-144	3.5	4.0	4.5	4.5

*MINIMUM COVER MAY VARY, DEPENDING ON LOCAL CONDITIONS. THE CONTRACTOR MUST PROVIDE THE ADDITIONAL COVER REQUIRED TO AVOID DAMAGE TO THE PIPE. MINIMUM COVER IS MEASURED FROM THE TOP OF THE PIPE TO THE TOP OF THE MAINTAINED CONSTRUCTION ROADWAY SURFACE.

CONSTRUCTION LOADING DIAGRAM
SCALE: N.T.S.

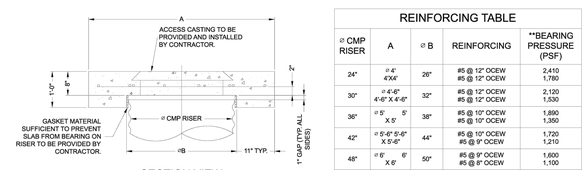

SECTION VIEW

REINFORCING TABLE

Ø CMP RISER	A	Ø B	REINFORCING	**BEARING PRESSURE (PSF)
24"	○ 4' 4"X4'	26"	#5 @ 12" OCEW #5 @ 12" OCEW	2,410 1,780
30"	○ 4'-6" 4'-6" X 4'-6"	32"	#5 @ 12" OCEW #5 @ 12" OCEW	2,120 1,530
36"	○ 5' X 5' 5'	38"	#5 @ 10" OCEW #5 @ 10" OCEW	1,890 1,350
42"	○ 5'-6" 5'-6" X 5'-6"	44"	#5 @ 10" OCEW #5 @ 9" OCEW	1,720 1,210
48"	○ 6' X 6' 6'	50"	#5 @ 9" OCEW #5 @ 8" OCEW	1,600 1,100

** ASSUMED SOIL BEARING CAPACITY

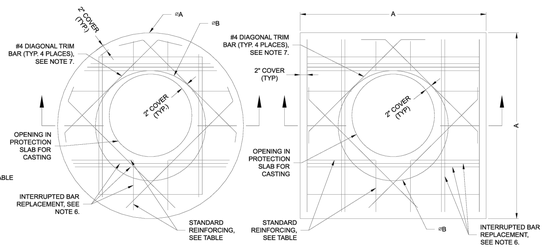

ROUND OPTION PLAN VIEW

SQUARE OPTION PLAN VIEW

NOTES:
1. DESIGN IN ACCORDANCE WITH AASHTO, 17th EDITION.
2. DESIGN LOAD HS25.
3. EARTH COVER = 1' MAX.
4. CONCRETE STRENGTH = 3,500 psi
5. REINFORCING STEEL = ASTM A615, GRADE 60.
6. PROVIDE ADDITIONAL REINFORCING AROUND OPENINGS EQUAL TO THE BARS INTERRUPTED, HALF EACH SIDE. ADDITIONAL BARS TO BE IN THE SAME PLANE.
7. TRIM OPENING WITH DIAGONAL #4 BARS, EXTEND BARS A MINIMUM OF 12" BEYOND OPENING, BEND BARS AS REQUIRED TO MAINTAIN BAR COVER.
8. PROTECTION SLAB AND ALL MATERIALS TO BE PROVIDED AND INSTALLED BY CONTRACTOR.
9. DETAIL DESIGN BY DELTA ENGINEERING, BINGHAMTON, NY.

MANHOLE CAP DETAIL
SCALE: N.T.S.

DYO630325 Broadlawns Parking Lot Expansion
Underground Detention System 7/24/26
Des Moines, IA
DETENTION SYSTEM

CMP DETENTION INSTALLATION GUIDE

PROPER INSTALLATION OF A FLEXIBLE UNDERGROUND DETENTION SYSTEM WILL ENSURE LONG-TERM PERFORMANCE. THE CONFIGURATION OF THESE SYSTEMS OFTEN REQUIRES SPECIAL CONSTRUCTION PRACTICES THAT DIFFER FROM CONVENTIONAL FLEXIBLE PIPE CONSTRUCTION. CONTECH ENGINEERED SOLUTIONS STRONGLY SUGGESTS SCHEDULING A PRE-CONSTRUCTION MEETING WITH YOUR LOCAL SALES ENGINEER TO DETERMINE IF ADDITIONAL MEASURES, NOT COVERED IN THIS GUIDE, ARE APPROPRIATE FOR YOUR SITE.

FOUNDATION

CONSTRUCT A FOUNDATION THAT CAN SUPPORT THE DESIGN LOADING APPLIED BY THE PIPE AND ADJACENT BACKFILL WEIGHT AS WELL AS MAINTAIN ITS INTEGRITY DURING CONSTRUCTION.

IF SOFT OR UNSUITABLE SOILS ARE ENCOUNTERED, REMOVE THE POOR SOILS DOWN TO A SUITABLE DEPTH AND THEN BUILD UP TO THE APPROPRIATE ELEVATION WITH A COMPETENT BACKFILL MATERIAL. THE STRUCTURAL FILL MATERIAL GRADATION SHOULD NOT ALLOW THE MIGRATION OF FINES, WHICH CAN CAUSE SETTLEMENT OF THE DETENTION SYSTEM OR PAVEMENT ABOVE. IF THE STRUCTURAL FILL MATERIAL IS NOT COMPATIBLE WITH THE UNDERLYING SOILS AN ENGINEERING FABRIC SHOULD BE USED AS A SEPARATOR. IN SOME CASES, USING A STIFF REINFORCING GEOGRID REDUCES OVER EXCAVATION AND REPLACEMENT FILL QUANTITIES.

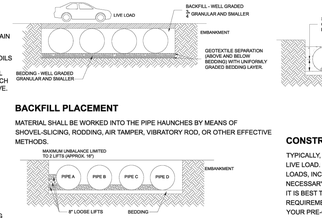

GRADE THE FOUNDATION SUBGRADE TO A UNIFORM OR SLIGHTLY SLOPING GRADE. IF THE SUBGRADE IS CLAY OR RELATIVELY NON-POROUS AND THE CONSTRUCTION SEQUENCE WILL LAST FOR AN EXTENDED PERIOD OF TIME, IT IS BEST TO SLOPE THE GRADE TO ONE END OF THE SYSTEM. THIS WILL ALLOW EXCESS WATER TO DRAIN QUICKLY, PREVENTING SATURATION OF THE SUBGRADE.

GEOMEMBRANE BARRIER

THE RESISTIVITY OF A PROJECT SITE MAY CHANGE OVER TIME DUE TO THE USE OF VARIOUS SALTING, DE-ICING, AND AGRICULTURAL AGENTS APPLIED ON OR NEAR THE AREA. TO MITIGATE THE POTENTIAL IMPACT OF THESE AGENTS, AN HDPE MEMBRANE LINER WILL BE INSTALLED ON THE CROWN OF EACH PIPE, CREATING AN IMPERMEABLE BARRIER. THIS MEASURE IS DESIGNED TO PROTECT THE SYSTEM FROM ENVIRONMENTAL CHANGES THAT COULD LEAD TO PREMATURE CORROSION AND REDUCE THE OVERALL SERVICE LIFE.

IN-SITU TRENCH WALL

IF EXCAVATION IS REQUIRED, THE TRENCH WALL NEEDS TO BE CAPABLE OF SUPPORTING THE LOAD THAT THE PIPE SHEDS AS THE SYSTEM IS LOADED. IF SOILS ARE NOT CAPABLE OF SUPPORTING THESE LOADS, THE PIPE CAN DEFLECT. PERFORM A SIMPLE SOIL PRESSURE CHECK USING THE APPLIED LOADS TO DETERMINE THE LIMITS OF EXCAVATION BEYOND THE SPRING LINE OF THE OUTER MOST PIPES.

IN MOST CASES THE REQUIREMENTS FOR A SAFE WORK ENVIRONMENT AND PROPER BACKFILL PLACEMENT AND COMPACTION TAKE CARE OF THIS CONCERN.

BACKFILL PLACEMENT

MATERIAL SHALL BE WORKED INTO THE PIPE HAUNCHES BY MEANS OF SHOVEL-SLICING, RODDING, AIR TAMPER, VIBRATORY ROD, OR OTHER EFFECTIVE METHODS.

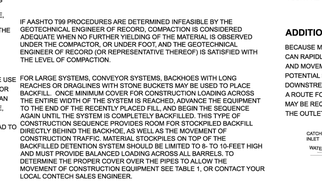

IF AASHTO T99 PROCEDURES ARE DETERMINED INFEASIBLE BY THE GEOTECHNICAL ENGINEER OF RECORD, COMPACTION IS CONSIDERED ADEQUATE WHEN NO FURTHER YIELDING OF THE MATERIAL IS OBSERVED UNDER THE COMPACTOR, OR UNDER FOOT, AND THE GEOTECHNICAL ENGINEER OF RECORD (OR REPRESENTATIVE THEREOF) IS SATISFIED WITH THE LEVEL OF COMPACTION.

FOR LARGE SYSTEMS, CONVEYOR SYSTEMS, BACKHOES WITH LONG REACHES OR DRAGLINES WITH STONE BUCKETS MAY BE USED TO PLACE BACKFILL. ONCE MINIMUM COVER FOR CONSTRUCTION LOADING ACROSS THE ENTIRE WIDTH OF THE SYSTEM IS REACHED, ADVANCE THE EQUIPMENT TO THE END OF THE RECENTLY PLACED FILL, AND BEGIN THE SEQUENCE AGAIN UNTIL THE SYSTEM IS COMPLETELY BACKFILLED. THIS TYPE OF CONSTRUCTION SEQUENCE PROVIDES ROOM FOR STOCKPILED BACKFILL DIRECTLY BEHIND THE BACKHOE, AS WELL AS THE MOVEMENT OF CONSTRUCTION TRAFFIC. MATERIAL STOCKPILES ON TOP OF THE BACKFILLED DETENTION SYSTEM SHOULD BE LIMITED TO 8- TO 10-FEET HIGH AND MUST PROVIDE BALANCED LOADING ACROSS ALL BARRELS. TO DETERMINE THE PROPER COVER OVER THE PIPES TO ALLOW THE MOVEMENT OF CONSTRUCTION EQUIPMENT SEE TABLE 1, OR CONTACT YOUR LOCAL CONTECH SALES ENGINEER.

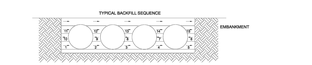

WHEN FLOWABLE FILL IS USED, YOU MUST PREVENT PIPE FLOATATION. TYPICALLY, SMALL LIFTS ARE PLACED BETWEEN THE PIPES AND THEN ALLOWED TO SET-UP PRIOR TO THE PLACEMENT OF THE NEXT LIFT. THE ALLOWABLE THICKNESS OF THE CLSM LIFT IS A FUNCTION OF A PROPER BALANCE BETWEEN THE UPLIFT FORCE OF THE CLSM, THE OPPOSING WEIGHT OF THE PIPE, AND THE EFFECT OF OTHER RESTRAINING MEASURES. THE PIPE CAN CARRY LIMITED FLUID PRESSURE WITHOUT PIPE DISTORTION OR DISPLACEMENT, WHICH ALSO AFFECTS THE CLSM LIFT THICKNESS. YOUR LOCAL CONTECH SALES ENGINEER CAN HELP DETERMINE THE PROPER LIFT THICKNESS.

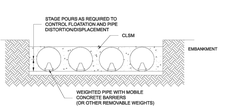

CONSTRUCTION LOADING

TYPICALLY, THE MINIMUM COVER SPECIFIED FOR A PROJECT ASSUMES H-20 LIVE LOAD. BECAUSE CONSTRUCTION LOADS OFTEN EXCEED DESIGN LIVE LOADS, INCREASED TEMPORARY MINIMUM COVER REQUIREMENTS ARE NECESSARY. SINCE CONSTRUCTION EQUIPMENT VARIES FROM JOB TO JOB, IT IS BEST TO ADDRESS EQUIPMENT SPECIFIC MINIMUM COVER REQUIREMENTS WITH YOUR LOCAL CONTECH SALES ENGINEER DURING YOUR PRE-CONSTRUCTION MEETING.

ADDITIONAL CONSIDERATIONS

BECAUSE MOST SYSTEMS ARE CONSTRUCTED BELOW-GRADE, RAINFALL CAN RAPIDLY FILL THE EXCAVATION; POTENTIALLY CAUSING FLOATATION AND MOVEMENT OF THE PREVIOUSLY PLACED PIPES. TO HELP MITIGATE POTENTIAL PROBLEMS, IT IS BEST TO START THE INSTALLATION AT THE DOWNSTREAM END WITH THE OUTLET ALREADY CONSTRUCTED TO ALLOW A ROUTE FOR THE WATER TO ESCAPE. TEMPORARY DIVERSION MEASURES MAY BE REQUIRED FOR HIGH FLOWS DUE TO THE RESTRICTED NATURE OF THE OUTLET PIPE.

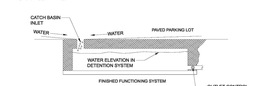

CMP DETENTION SYSTEM INSPECTION AND MAINTENANCE

UNDERGROUND STORMWATER DETENTION AND INFILTRATION SYSTEMS MUST BE INSPECTED AND MAINTAINED AT REGULAR INTERVALS FOR PURPOSES OF PERFORMANCE AND LONGEVITY.

INSPECTION

INSPECTION IS THE KEY TO EFFECTIVE MAINTENANCE OF CMP DETENTION SYSTEMS AND IS EASILY PERFORMED. CONTECH RECOMMENDS ONGOING, ANNUAL INSPECTIONS. SITES WITH HIGH TRASH LOAD OR SMALL OUTLET CONTROL ORIFICES MAY NEED MORE FREQUENT INSPECTIONS. THE RATE AT WHICH THE SYSTEM COLLECTS POLLUTANTS WILL DEPEND MORE ON SITE SPECIFIC ACTIVITIES RATHER THAN THE SIZE OR CONFIGURATION OF THE SYSTEM.

INSPECTIONS SHOULD BE PERFORMED MORE OFTEN IN EQUIPMENT WASHDOWN AREAS, IN CLIMATES WHERE SANDING AND/OR SALTING OPERATIONS TAKE PLACE, AND IN OTHER VARIOUS INSTANCES IN WHICH ONE WOULD EXPECT HIGHER ACCUMULATIONS OF SEDIMENT OR ABRASIVE/ CORROSIVE CONDITIONS. A RECORD OF EACH INSPECTION IS TO BE MAINTAINED FOR THE LIFE OF THE SYSTEM

MAINTENANCE

CMP DETENTION SYSTEMS SHOULD BE CLEANED WHEN AN INSPECTION REVEALS ACCUMULATED SEDIMENT OR TRASH IS CLOGGING THE DISCHARGE ORIFICE.

ACCUMULATED SEDIMENT AND TRASH CAN TYPICALLY BE EVACUATED THROUGH THE MANHOLE OVER THE OUTLET ORIFICE. IF MAINTENANCE IS NOT PERFORMED AS RECOMMENDED, SEDIMENT AND TRASH MAY ACCUMULATE IN FRONT OF THE OUTLET ORIFICE. MANHOLE COVERS SHOULD BE SECURELY SEATED FOLLOWING CLEANING ACTIVITIES. CONTECH SUGGESTS THAT ALL SYSTEMS BE DESIGNED WITH AN ACCESS/INSPECTION MANHOLE SITUATED AT OR NEAR THE INLET AND THE OUTLET ORIFICE. SHOULD IT BE NECESSARY TO GET INSIDE THE SYSTEM TO PERFORM MAINTENANCE ACTIVITIES, ALL APPROPRIATE PRECAUTIONS REGARDING CONFINED SPACE ENTRY AND OSHA REGULATIONS SHOULD BE FOLLOWED.

ANNUAL INSPECTIONS ARE BEST PRACTICE FOR ALL UNDERGROUND SYSTEMS. DURING THIS INSPECTION, IF EVIDENCE OF SALTING/DE-ICING AGENTS IS OBSERVED WITHIN THE SYSTEM, IT IS BEST PRACTICE FOR THE SYSTEM TO BE RINSED, INCLUDING ABOVE THE SPRING LINE SOON AFTER THE SPRING THAW AS PART OF THE MAINTENANCE PROGRAM FOR THE SYSTEM.

MAINTAINING AN UNDERGROUND DETENTION OR INFILTRATION SYSTEM IS EASIEST WHEN THERE IS NO FLOW ENTERING THE SYSTEM. FOR THIS REASON, IT IS A GOOD IDEA TO SCHEDULE THE CLEANOUT DURING DRY WEATHER.

THE FOREGOING INSPECTION AND MAINTENANCE EFFORTS HELP ENSURE UNDERGROUND PIPE SYSTEMS USED FOR STORMWATER STORAGE CONTINUE TO FUNCTION AS INTENDED BY IDENTIFYING RECOMMENDED REGULAR INSPECTION AND MAINTENANCE PRACTICES. INSPECTION AND MAINTENANCE RELATED TO THE STRUCTURAL INTEGRITY OF THE PIPE OR THE SOUNDNESS OF PIPE JOINT CONNECTIONS IS BEYOND THE SCOPE OF THIS GUIDE.

DYO630325 Broadlawns Parking Lot Expansion
Underground Detention System 7/24/26
Des Moines, IA
DETENTION SYSTEM

BISHOP ENGINEERING +
3501 104th Street, Urbandale, IA 50322 Ph: 515-276-0467

SITE PLAN
BROADLAWNS PARKING LOT EXPANSION
1826 HICKMAN ROAD
DES MOINES, IA 50314

REFERENCE NUMBER:

DRAWN BY: LCR

REVISION DATE:
1ST CITY SUB: 2026-05-13
2ND CITY SUB: 2026-07-27
90% CD SET: 2026-08-25
100% BID SET: 2026-09-10

PROJECT NUMBER: 240308-1

SHEET NAME: SITE DETAILS SHEET

SHEET NUMBER: C6.4

9/10/2026 9:47:21 AM L:\LAND PROJECTS 2024\240308-1 BROADLAWNS PARKING LOT EXPANSION\DWG\C6 DETAILS.DWG

PRELIMINARY. NOT FOR CONSTRUCTION

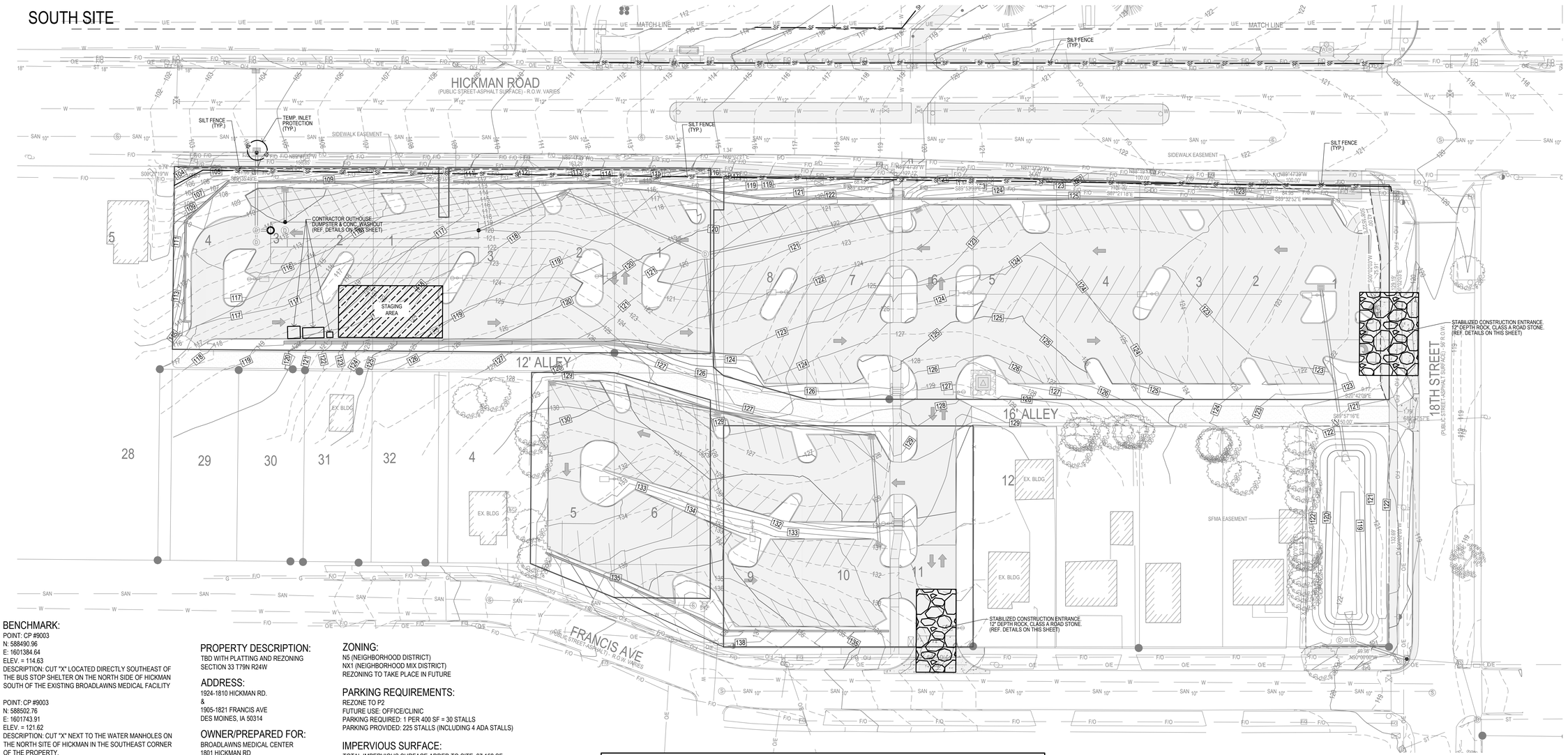

BENCHMARK:

POINT: CP #9003
N: 588490.96
E: 1601384.64
ELEV. = 114.63
DESCRIPTION: CUT "X" LOCATED DIRECTLY SOUTHEAST OF THE BUS STOP SHELTER ON THE NORTH SIDE OF HICKMAN SOUTH OF THE EXISTING BROADLAWNS MEDICAL FACILITY

POINT: CP #9003
N: 588502.76
E: 1601743.91
ELEV. = 121.62
DESCRIPTION: CUT "X" NEXT TO THE WATER MANHOLES ON THE NORTH SITE OF HICKMAN IN THE SOUTHEAST CORNER OF THE PROPERTY.

LEGEND:

- SILT FENCE (TYP)
- 120 — EXISTING CONTOUR
- 120 — PROPOSED CONTOUR
- STABILIZED ENTRANCE AT LEAST 50' LONG-12" DEEP CLASS "A" ROAD STONE ON GEOTEXTILE

GRADING LEGEND:

EXISTING CONTOUR	150
PROPOSED CONTOUR	150
FINISHED GROUND ELEVATION	150.50
TOP OF CURB ELEVATION	150.50T/C
GUTTER ELEVATION	150.50G
TOP OF WALL ELEVATION	150.50T/W
BOTTOM OF WALL ELEVATION	150.50B/W
EDGE OF WALK ELEVATION	150.50E/W
TOP OF STAIR ELEVATION	150.50T/S
BOTTOM OF STAIR ELEVATION	150.50B/S

NOTE: WALL ELEVATIONS SHOWN ON PLAN ARE FINISHED GROUND GRADES AT THE TOP AND BOTTOM OF THE WALL.

PROPERTY DESCRIPTION:

TBD WITH PLATTING AND REZONING
SECTION 33 T79N R24W

ADDRESS:

1924-1810 HICKMAN RD.
&
1905-1821 FRANCIS AVE
DES MOINES, IA 50314

OWNER/PREPARED FOR:

BROADLAWNS MEDICAL CENTER
1801 HICKMAN RD
DES MOINES, IA 50314

ZONING:

N5 (NEIGHBORHOOD DISTRICT)
NX1 (NEIGHBORHOOD MIX DISTRICT)
REZONING TO TAKE PLACE IN FUTURE

PARKING REQUIREMENTS:

REZONE TO P2
FUTURE USE: OFFICE/CLINIC
PARKING REQUIRED: 1 PER 400 SF = 30 STALLS
PARKING PROVIDED: 225 STALLS (INCLUDING 4 ADA STALLS)

IMPERVIOUS SURFACE:

TOTAL IMPERVIOUS SURFACE ADDED TO SITE: 87,152 SF

EROSION CONTROL NOTES:

1. SEE SUPPLEMENTAL DETAIL STORM WATER POLLUTION PLAN NARRATIVE FOR ALL EROSION CONTROL MEASURES, ADDITIONAL DETAILS AND NOTE. ADDITIONAL NOTES AND MEASURES IN NARRATIVE SHALL BE CONSIDERED INCIDENTAL AND SHALL BE INCLUDED IN THE ORIGINAL BID.
2. SWPPP PLAN AND NARRATIVE ARE CONSIDERED A LIVING DOCUMENT AND WILL NEED PERIODIC UPDATES AND ADJUSTMENTS AS NECESSARY DEPENDING ON SITE CONDITIONS TO ASSURE COMPLIANCE WITH NPDES GENERAL PERMIT NO. 2. IT IS THE CONTRACTOR'S RESPONSIBILITY TO UPDATE THE SWPPP AND IMPLEMENT ANY AND ALL MEASURES NECESSARY TO COMPLY WITH SAID PERMIT NO. 2.
3. INSTALL PERIMETER SILT FENCE AS SHOWN ON PLANS PRIOR TO CONSTRUCTION.
4. INSTALL INTAKE PROTECTION WITH SILT FENCE IMMEDIATELY AFTER STORM SEWER CONSTRUCTION.
5. INSTALL FINISHED PAVING INLET PROTECTION IMMEDIATELY AFTER PAVING IS COMPLETED AROUND INTAKE.
6. OTHER EROSION CONTROL TYPES MAY NOT BE SUBSTITUTED FOR SILT FENCE.
7. CONTRACTOR SHALL BE RESPONSIBLE FOR SUPPLYING A CONCRETE WASHOUT IN ACCORDANCE WITH NPDES GENERAL PERMIT NO. 2 DURING ALL CONCRETE WORK. CONCRETE WASHOUT SHALL MEET SUDAS SPEC 11050.
8. CONTRACTOR SHALL BE RESPONSIBLE FOR SUPPLYING TEMPORARY RESTROOM FACILITIES. SANITARY WASTE SHALL BE DISPOSED OF PER ALL FEDERAL, STATE AND LOCAL REGULATIONS.
9. CONTRACTOR SHALL BE RESPONSIBLE FOR ENSURING ALL TOPSOIL REQUIREMENTS OF NPDES GENERAL PERMIT NO. 2 ARE MET.
10. THIS PROJECT INCLUDES SAWCUTTING OR CONCRETE GRINDING SO PROTECTION OF STORM SEWERS AND DRAINAGE WAYS WILL NEED TO BE PROVIDED FROM SLURRY FROM THE CONCRETE OPERATIONS TO DISCHARGE OFFSITE. SEE SWPPP SHEET AND NARRATIVE FOR ADDITIONAL DETAILS.
11. CONTRACTOR SHALL PROVIDE APPROPRIATE CONTROLS TO PREVENT DISCHARGES FROM ANY AND ALL DEWATERING ACTIVITIES.
12. SEE LANDSCAPE PLAN FOR FINAL STABILIZATION INCLUDING SEEDING AND SODDING AREAS.
13. PER NPDES GENERAL PERMIT NO. 2, IF CONSTRUCTION ACTIVITY IS NOT PLANNED FOR AT LEAST 14 DAYS, ALL DISTURBED AREAS SHALL BE STABILIZED IMMEDIATELY BY TEMPORARY EROSION CONTROL MEASURES.
14. THE FOLLOWING DISCHARGES ARE PROHIBITED: WASTEWATER FROM WASHOUT AND CLEANOUT OF STUCCO, PAINT, FORM RELEASE OIL, CURING COMPOUNDS AND OTHER CONSTRUCTION MATERIALS, FUEL, OILS OR OTHER POLLUTANTS USED IN VEHICLE AND EQUIPMENT OPERATION AND MAINTENANCE, AND SOAPS OR SOLVENTS USED IN VEHICLE AND EQUIPMENT WASHING

EROSION CONTROL REMOVAL NOTES:

1. AFTER FINAL STABILIZATION HAS OCCURED, AS DEFINED IN NPDES GENERAL PERMIT NO. 2, CONTRACTOR SHALL BE RESPONSIBLE FOR THE REMOVAL OF ALL TEMPORARY EROSION CONTROL DEVICES INCLUDING, BUT NOT LIMITED TO: SILT FENCE, INLET PROTECTION, AND TEMPORARY STANDPIPES.

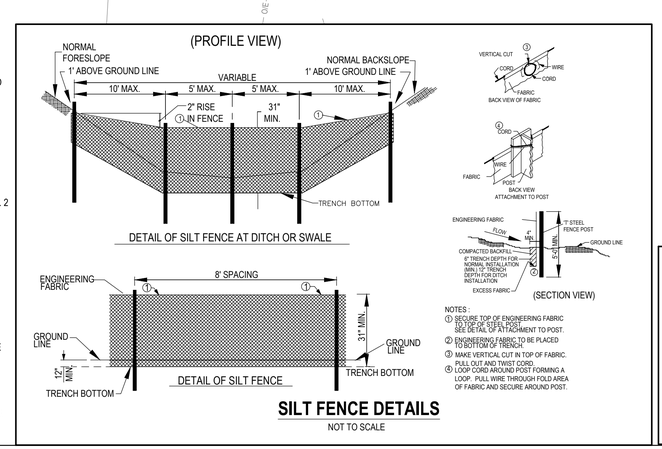

NOTES :
① SECURE TOP OF ENGINEERING FABRIC TO TOP OF STEEL POST. SEE DETAIL OF ATTACHMENT TO POST.
② ENGINEERING FABRIC TO BE PLACED TO BOTTOM OF TRENCH.
③ MAKE VERTICAL CUT IN TOP OF FABRIC. PULL OUT AND TWIST CORD.
④ LOOP CORD AROUND POST FORMING A LOOP. PULL WIRE THROUGH FOLD AREA OF FABRIC AND SECURE AROUND POST.

SILT FENCE DETAILS

NOT TO SCALE

DISTURBED AREA = 3.2 ACRES±

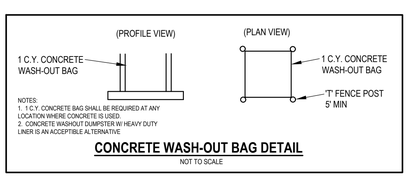

NOTES:
1. 1 C.Y. CONCRETE BAG SHALL BE REQUIRED AT ANY LOCATION WHERE CONCRETE IS USED.
2. CONCRETE WASHOUT DUMPSTER W/ HEAVY DUTY LINER IS AN ACCEPTIBLE ALTERNATIVE

CONCRETE WASH-OUT BAG DETAIL

NOT TO SCALE

(PLAN VIEW)

NOTES:

1. SECURE TOP OF FABRIC TO POSTS, USING CABLE TIES OR WIRE.

2. FABRIC TO BE BURIED 12", AND FOLDED ALONG BOTTOM.

3. STEEL POSTS TO BE EMBEDDED 28".

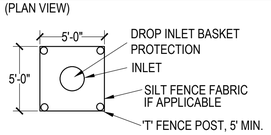

INLET PROTECTION DETAIL

NOT TO SCALE

STABILIZED ENTRANCE SHALL BE AT LEAST 50' LONG AND EXTEND TO THE PUBLIC ROADWAY.

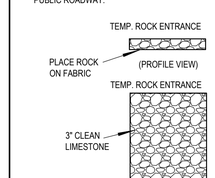

SITE ENTRANCE DETAIL

NOT TO SCALE

GRAPHIC SCALE
30 0 15 30 60

BISHOP ENGINEERING +
3501 104th Street, Urbandale, IA 50322 Ph: 515-276-0467

SITE PLAN
BROADLAWNS PARKING LOT EXPANSION
1826 HICKMAN ROAD
DES MOINES, IA 50314

REFERENCE NUMBER:

DRAWN BY: LCR

REVISION DATE:
1ST CITY SUB: 2026-05-13
2ND CITY SUB: 2026-07-27
90% CD SET: 2026-08-25
100% BID SET: 2026-09-10

PROJECT NUMBER: 240308-1

SHEET NAME: EROSION CONTROL PLAN

SHEET NUMBER: C7.1

9/9/2026 1:24:38 PM L:\LAND PROJECTS 2024\240308-1 BROADLAWNS PARKING LOT EXPANSION\DWG\C7 SWPPP.DWG

PRELIMINARY- NOT FOR CONSTRUCTION

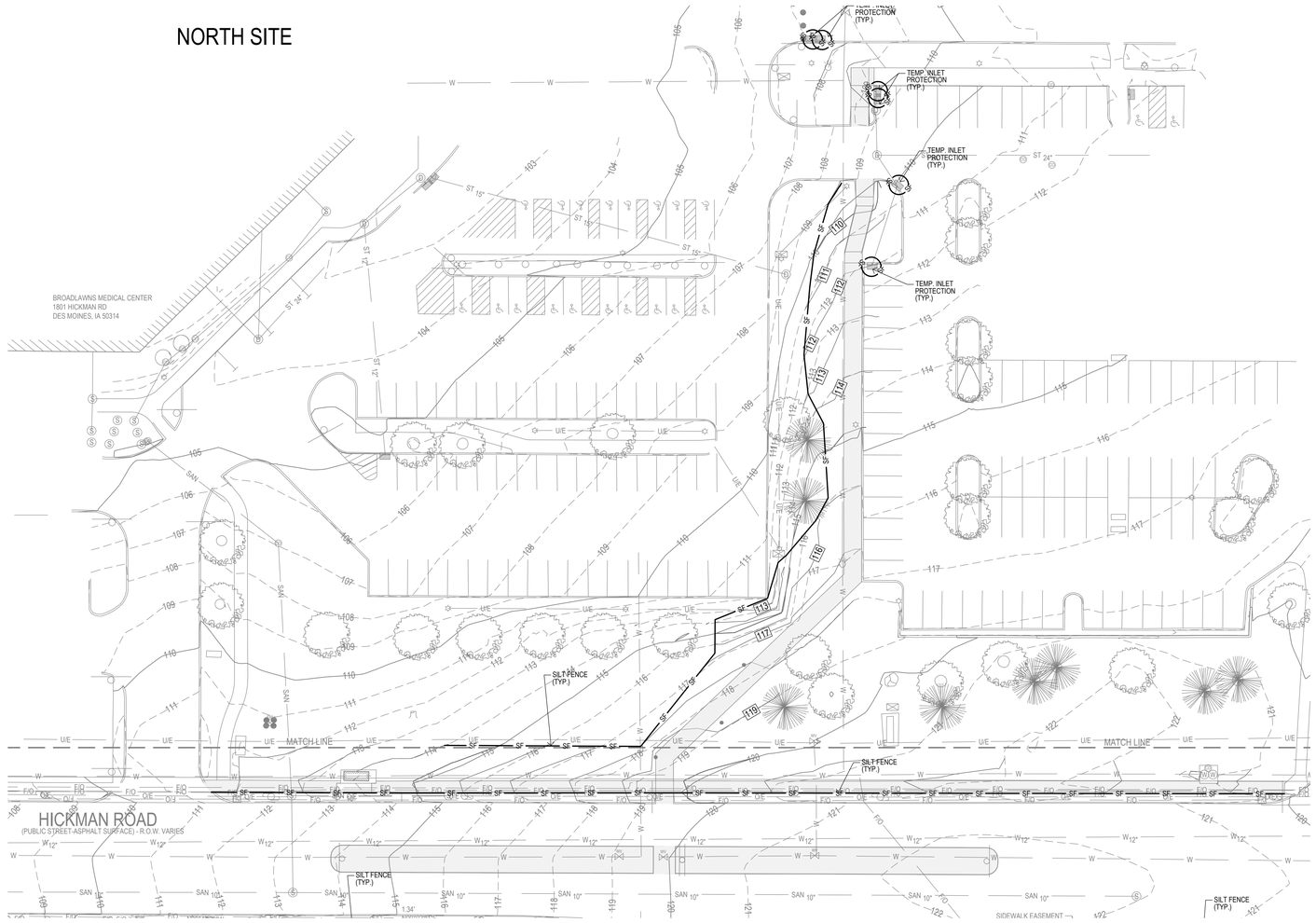

LEGEND:

- SILT FENCE (TYP)
- 120 — EXISTING CONTOUR
- 120 — PROPOSED CONTOUR
- STABILIZED ENTRANCE AT LEAST 50' LONG-12" DEEP CLASS "A" ROAD STONE ON GEOTEXTILE

GRADING LEGEND:

EXISTING CONTOUR	150
PROPOSED CONTOUR	150
FINISHED GROUND ELEVATION	150.50
TOP OF CURB ELEVATION	150.50T/C
GUTTER ELEVATION	150.50G
TOP OF WALL ELEVATION	150.50T/W
BOTTOM OF WALL ELEVATION	150.50B/W
EDGE OF WALK ELEVATION	150.50E/W
TOP OF STAIR ELEVATION	150.50T/S
BOTTOM OF STAIR ELEVATION	150.50B/S

NOTE: WALL ELEVATIONS SHOWN ON PLAN ARE FINISHED GROUND GRADES AT THE TOP AND BOTTOM OF THE WALL.

EROSION CONTROL NOTES:

1. SEE SUPPLEMENTAL DETAIL STORM WATER POLLUTION PLAN NARRATIVE FOR ALL EROSION CONTROL MEASURES, ADDITIONAL DETAILS AND NOTE. ADDITIONAL NOTES AND MEASURES IN NARRATIVE SHALL BE CONSIDERED INCIDENTAL AND SHALL BE INCLUDED IN THE ORIGINAL BID.
2. SWPPP PLAN AND NARRATIVE ARE CONSIDERED A LIVING DOCUMENT AND WILL NEED PERIODIC UPDATES AND ADJUSTMENTS AS NECESSARY DEPENDING ON SITE CONDITIONS TO ASSURE COMPLIANCE WITH NPDES GENERAL PERMIT NO. 2. IT IS THE CONTRACTOR'S RESPONSIBILITY TO UPDATE THE SWPPP AND IMPLEMENT ANY AND ALL MEASURES NECESSARY TO COMPLY WITH SAID PERMIT NO. 2.
3. INSTALL PERIMETER SILT FENCE AS SHOWN ON PLANS PRIOR TO CONSTRUCTION.
4. INSTALL INTAKE PROTECTION WITH SILT FENCE IMMEDIATELY AFTER STORM SEWER CONSTRUCTION.
5. INSTALL FINISHED PAVING INLET PROTECTION IMMEDIATELY AFTER PAVING IS COMPLETED AROUND INTAKE.
6. OTHER EROSION CONTROL TYPES MAY NOT BE SUBSTITUTED FOR SILT FENCE.
7. CONTRACTOR SHALL BE RESPONSIBLE FOR SUPPLYING A CONCRETE WASHOUT IN ACCORDANCE WITH NPDES GENERAL PERMIT NO. 2 DURING ALL CONCRETE WORK. CONCRETE WASHOUT SHALL MEET SUDAS SPEC 11050.
8. CONTRACTOR SHALL BE RESPONSIBLE FOR SUPPLYING TEMPORARY RESTROOM FACILITIES. SANITARY WASTE SHALL BE DISPOSED OF PER ALL FEDERAL, STATE AND LOCAL REGULATIONS.
9. CONTRACTOR SHALL BE RESPONSIBLE FOR ENSURING ALL TOPSOIL REQUIREMENTS OF NPDES GENERAL PERMIT NO. 2 ARE MET.
10. THIS PROJECT INCLUDES SAWCUTTING OR CONCRETE GRINDING SO PROTECTION OF STORM SEWERS AND DRAINAGE WAYS WILL NEED TO BE PROVIDED FROM SLURRY FROM THE CONCRETE OPERATIONS TO DISCHARGE OFFSITE. SEE SWPPP SHEET AND NARRATIVE FOR ADDITIONAL DETAILS.
11. CONTRACTOR SHALL PROVIDE APPROPRIATE CONTROLS TO PREVENT DISCHARGES FROM ANY AND ALL DEWATERING ACTIVITIES.
12. SEE LANDSCAPE PLAN FOR FINAL STABILIZATION INCLUDING SEEDING AND SODDING AREAS.
13. PER NPDES GENERAL PERMIT NO. 2, IF CONSTRUCTION ACTIVITY IS NOT PLANNED FOR AT LEAST 14 DAYS, ALL DISTURBED AREAS SHALL BE STABILIZED IMMEDIATELY BY TEMPORARY EROSION CONTROL MEASURES.
14. THE FOLLOWING DISCHARGES ARE PROHIBITED: WASTEWATER FROM WASHOUT AND CLEANOUT OF STUCCO, PAINT, FORM RELEASE OIL, CURING COMPOUNDS AND OTHER CONSTRUCTION MATERIALS; FUEL, OILS OR OTHER POLLUTANTS USED IN VEHICLE AND EQUIPMENT OPERATION AND MAINTENANCE, AND SOAPS OR SOLVENTS USED IN VEHICLE AND EQUIPMENT WASHING

EROSION CONTROL REMOVAL NOTES:

1. AFTER FINAL STABILIZATION HAS OCCURED, AS DEFINED IN NPDES GENERAL PERMIT NO. 2, CONTRACTOR SHALL BE RESPONSIBLE FOR THE REMOVAL OF ALL TEMPORARY EROSION CONTROL DEVICES INCLUDING, BUT NOT LIMITED TO: SILT FENCE, INLET PROTECTION, AND TEMPORARY STANDPIPES.

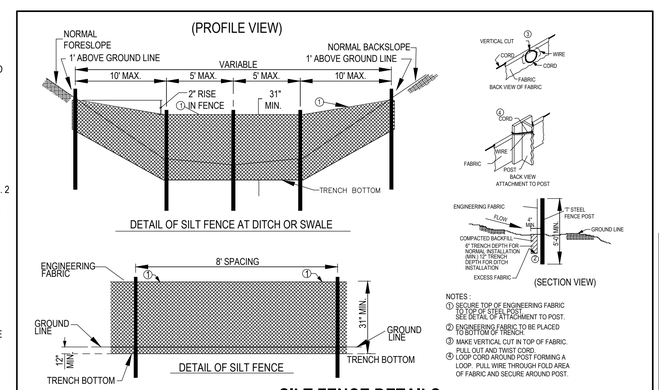

SILT FENCE DETAILS

NOT TO SCALE

DISTURBED AREA = 3.2 ACRES±

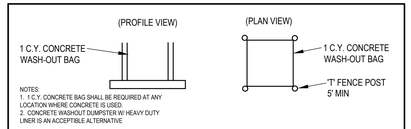

CONCRETE WASH-OUT BAG DETAIL

NOT TO SCALE

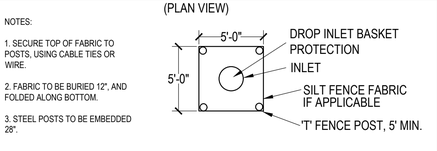

INLET PROTECTION DETAIL

NOT TO SCALE

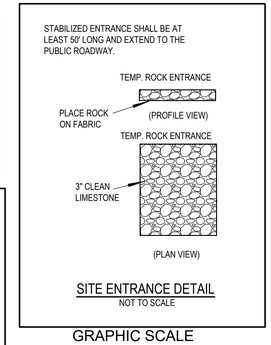

SITE ENTRANCE DETAIL

NOT TO SCALE

GRAPHIC SCALE

30 0 15 30 60

BISHOP ENGINEERING +
3501 104th Street, Urbandale, IA 50322 Ph: 515-276-0467

SITE PLAN
BROADLAWNS PARKING LOT EXPANSION
1826 HICKMAN ROAD
DES MOINES, IA 50314

REFERENCE NUMBER:

DRAWN BY: LCR

REVISION DATE:
1ST CITY SUB: 2026-05-13
2ND CITY SUB: 2026-07-27
90% CD SET: 2026-08-25
100% BID SET: 2026-09-10

PROJECT NUMBER: 240308-1

SHEET NAME: EROSION CONTROL PLAN

SHEET NUMBER: C7.2

9/9/2026 1:26:21 PM L:\LAND PROJECTS 2024\240308-1 BROADLAWNS PARKING LOT EXPANSION\DWG\C7 SWPPP.DWG

ELECTRICAL ABBREVIATIONS

A	DEVICE MOUNTED +8" ABOVE COUNTER TOP (VERIFY LOCATION)	NM	NONMETALLIC
AFF	ABOVE FINISHED FLOOR	NTS	NOT TO SCALE
ATS	AUTOMATIC TRANSFER SWITCH	OC	ON CENTER
C	CEILING	OFCI	OWNER FURNISHED CONTRACTOR INSTALLED
CB	CIRCUIT BREAKER	OFOI	OWNER FURNISHED, OWNER INSTALLED
CT	CURRENT TRANSFORMER	R	EXISTING ITEM TO BE REMOVED
E	EXISTING ITEM TO REMAIN	RR	EXISTING ITEM TO BE REMOVED AND RELOCATED
EC	ELECTRICAL CONTRACTOR	RN	EXISTING ITEM TO BE REMOVED AND REPLACED WITH NEW
EM	EMERGENCY LIGHT FIXTURE	SCCR	SHORT CIRCUIT CURRENT RATING
ER	NEW LOCATION OF EXISTING ITEM	T	TAMPER PROOF DEVICE
F	ROUGH IN FOR FUTURE DEVICE	TCC	TEMPERATURE CONTROL CONTRACTOR
FAAP	FIRE ALARM ANNUNCIATOR PANEL	TV	TELEVISION
FACP	FIRE ALARM CONTROL PANEL	TYP	TYPICAL
FSD	FIRE SMOKE DAMPER	UPS	UNINTERRUPTIBLE POWER SUPPLY
G	GROUND FAULT CIRCUIT INTERRUPTER	V	VOLTS
GND	GROUND	VA	VOLT-AMPERES
KVA	KILO-VOLT-AMPERES	WG	WIREGUARD COVER
KW	KILOWATTS	WP	WEATHERPROOF DEVICE
MC	MECHANICAL CONTRACTOR	WR	WEATHER RESISTANT DEVICE
MCB	MAIN CIRCUIT BREAKER	XFR	TRANSFORMER
MDP	MAIN DISTRIBUTION PANEL	+24"	INDICATES MOUNTING HEIGHT CENTER LINE OF DEVICE TO FINISHED FLOOR
MLO	MAIN LUGS ONLY		
N	NEW DEVICE IN EXISTING LOCATION		
NIC	NOT IN CONTRACT		

GENERAL NOTES - ELECTRICAL

1. COORDINATE LOCATION/INSTALLATION OF ELECTRICAL WORK WITH ALL OTHER TRADES. BEGIN INSTALLATION AND ROUGH-IN ONLY AFTER PROPER AND TIMELY COORDINATION WITH ALL TRADES ASSOCIATED WITH THE INSTALLATION IS COMPLETE. COORDINATE WITH BUILDING STRUCTURE, ARCHITECTURE, MECHANICAL SHEET METAL, ALL PIPING SYSTEMS, LIGHT FIXTURES, CONDUITS, CABLE TRAYS, EQUIPMENT ACCESS/CLEARANCE, ETC. REFER TO ALL GENERAL, MECHANICAL, AND ELECTRICAL DRAWINGS AND SPECIFICATIONS FOR THIS PROJECT. CONTRACTOR IS RESPONSIBLE FOR REWORK OF INSTALLED EQUIPMENT RESULTING FROM INSUFFICIENT COORDINATION.

2. ELECTRICAL DRAWINGS ARE ONLY A PORTION OF THE COMPLETE SET OF PLANS AND CONTRACT DOCUMENTS. THE ELECTRICAL SCOPE OF WORK IS DEFINED BY THE COMPLETE SET OF CONTRACT DOCUMENTS. THIS INCLUDES BUT IS NOT LIMITED TO REFERENCING; ARCHITECTURAL PLANS FOR DIMENSIONS AND DETAILS; EQUIPMENT PLANS FOR ROUGH-IN REQUIREMENTS, MECHANICAL PLANS FOR EQUIPMENT SIZES AND LOCATIONS.

3. REMOVAL OF EXISTING POLES AND OVERHEAD UTILITY LINES ARE NOT SHOWN ON THE ELECTRICAL DRAWING SET. REFER TO CIVIL DRAWINGS FOR FURTHER INFORMATION. COORDINATE REMOVAL AND TIMING WITH CM AND MIDAMERICAN ENERGY. GENERAL INTENT IS THAT MIDAMERICAN WILL REMOVE EXISTING OVERHEAD LINES AND POLES ALONG HICKMAN ROAD. NEW POLES WILL BE INSTALLED AND UTILITY LINES WILL BE UNDERGROUND.

INSTALLATION NOTES - ELECTRICAL

1. INCREASE CONDUCTOR SIZES ON 20A 120V-1 PHASE CIRCUITS EXCEEDING 100 FEET TO CENTER OF LOAD TO ACCOUNT FOR VOLTAGE DROP.

2. RACEWAYS AND BOXES ARE SHOWN DIAGRAMMATICALLY ONLY AND INDICATE GENERAL AND APPROXIMATE LOCATIONS. LAYOUTS DO NOT ALWAYS SHOW THE TOTAL NUMBER OF RACEWAYS OR BOXES FOR THE CIRCUITS REQUIRED, NOR ARE THE LOCATIONS OF INDICATED RUNS INTENDED TO SHOW THE ACTUAL ROUTING OF THE RACEWAYS.

3. PROVIDE A DEDICATED GREEN INSULATED GROUND CONDUCTOR TO ALL DEVICES. DO NOT USE CONDUIT SYSTEM AS THE ONLY EQUIPMENT GROUNDING METHOD.

4. BALANCE PANEL LOADS DURING INSTALLATION. CIRCUIT NUMBERING SHOWN ON PLANS MAY BE ADJUSTED TO ACCOMMODATE.

5. PROVIDE TYPED PANEL DIRECTORY AT PROJECT COMPLETION FOR NEW PANELS AND EXISTING PANELS WITH CIRCUITS MODIFIED DURING PROJECT. USE OWNER'S CURRENT ROOM NUMBERS AND EQUIPMENT NAMES. PROVIDE UNIQUE CIRCUIT IDENTIFICATION PER NEC 408.4(A).

CODE NOTES - ELECTRICAL

1. PROVIDE ELECTRICAL INSTALLATION IN ACCORDANCE WITH ALL LOCAL, STATE, AND NATIONAL CODES.

2. THE CURRENT ADOPTED EDITION OF THE ELECTRICAL CODE IS THE STANDARD FOR THE ELECTRICAL INSTALLATION. VERIFY WITH LOCAL OFFICIALS WHEN PERMITS ARE OBTAINED. NOTIFY DESIGN TEAM OF ANY DISCREPANCIES BETWEEN THE PROJECT MANUAL OR DRAWINGS AND THE GOVERNING CODE.

3. INSTALLATION SHALL FOLLOW REQUIREMENTS OF THE ADAAG –AMERICANS WITH DISABILITIES ACT.

4. REFER TO PROJECT MANUAL AND PROJECT CODE REVIEW SHEET FOR LIST OF APPLICABLE CODES.

5. PER NEC EVERY CIRCUIT AND CIRCUIT MODIFICATION SHALL BE LEGIBLY IDENTIFIED AS TO ITS CLEAR, EVIDENT AND SPECIFIC PURPOSE OR USE. CONTRACTOR TO PROVIDE FINAL CIRCUIT IDENTIFICATION FOR ALL NEW AND MODIFIED CIRCUITS AT PROJECT COMPLETION.

GENERAL SYMBOLS

- JUNCTION BOX, CEILING OR FLOOR MOUNTED.
- JUNCTION BOX, WALL MOUNTED, ELEVATION AS NOTED.
- CIRCUIT HOMERUN, CONCEALED CONDUIT OR CABLE
- CIRCUIT HOMERUN, UNDER FLOOR CONDUIT OR CABLE
- KEYNOTE
- XXX / X — EQUIPMENT IDENTIFICATION TAG. REFER TO EQUIPMENT CONNECTION SCHEDULE
- 1 / A101 SIM — DETAIL DRAWING REFERENCE TAG, SIM-SIMILAR, TYP-TYPICAL, OPP-OPPOSITE; SHEET REFERENCE
- 1 / A101 SIM — SECTION CUT REFERENCE TAG, SIM-SIMILAR, TYP-TYPICAL, OPP-OPPOSITE; SHEET REFERENCE
- A101 / 1 ref — INTERIOR ELEVATION DRAWING REFERENCE TAG
- 1 — DRAWINGS REVISION. REFER TO TITLEBLOCK FOR REVISION NAME AND DATE

POWER SYMBOLS

- W — DUPLEX GFCI WEATHER RESISTANT RECEPTACLE WITH WEATHER-PROOF IN-USE COVER, TAMPER-RESISTANT, WALL MOUNT
- EQUIPMENT CONNECTION. REFER TO EQUIPMENT CONNECTION SCHEDULE FOR CONNECTION TYPE. REFER TO PANEL SCHEDULES FOR GFCI PROTECTION WHERE REQUIRED
- T — UTILITY TRANSFORMER
- M — UTILITY METER
- PANELBOARD - SURFACE MOUNTED

LIGHTING SYMBOLS

- H — EXTERIOR LIGHT FIXTURE, WALL MOUNT +10', OR AS NOTED
- EXTERIOR POLE MOUNTED LIGHT FIXTURE, REFER TO LIGHT FIXTURE SCHEDULE
- BOLLARD LIGHT FIXTURE
- $ a — SINGLE POLE SWITCH, WALL MOUNT, LETTER INDICATES SWITCH LEG
- LIGHTING CONNECTION, REFER TO LIGHTING FIXTURE SCHEDULE FOR FIXTURE DESCRIPTION
- LC — LIGHTING CONTRACTOR
- R — RELAY
- PC — PHOTOCELL

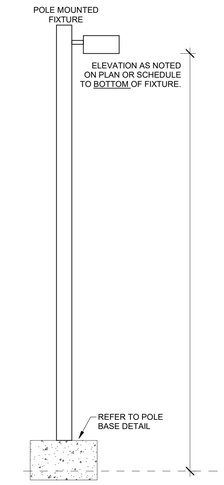

1 LIGHTING ELEVATIONS DETAIL
NOT TO SCALE

KCL ENGINEERING
300 4th St
West Des Moines, IA
50265
515-724-7938
info@kclengineering.com

BROADLAWNS MEDICAL CENTER HICKMAN ADDITIONAL PARKING

1826 HICKMAN
DES MOINES, IA 50314

Project No: 26169

Date: 09/10/2026

CONSTRUCTION DOCUMENTS

#	Revision	Date

Drawing Name:
ELECTRICAL GENERAL NOTES & SYMBOLS

Drawing #:
E000

Plot Date & Time: 9/9/2026 2:20:55 PM

© 2022 KCL Engineering L.L.C. These documents have been prepared specifically for this project. they are not suitable for use on other projects or in other locations without the expressed written approval and participation of KCL Engineering L.L.C. A limited license is granted to the owner/contractor to reproduce these documents or portions thereof, but only for use in connection with this project. Unauthorized reproduction is prohibited.

IOWA ONE CALL
1-800-292-8989
CALL - BEFORE - YOU - DIG

CALL BEFORE YOU DIG 811 Iowa One Call

GENERAL NOTE:

UNDERGROUND FACILITIES, STRUCTURES, AND UTILITIES HAVE BEEN SHOWN BASED UPON INFORMATION OBTAINED FROM FIELD LOCATIONS BY UTILITY COMPANIES, AVAILABLE SURVEYS AND RECORDS. THEIR LOCATIONS MUST BE CONSIDERED APPROXIMATE ONLY. IT IS ALSO POSSIBLE THAT THERE MAY BE OTHER UNDERGROUND FACILITIES, STRUCTURES, AND UTILITIES IN EXISTENCE THAT ARE NOT SHOWN. IT IS THE RESPONSIBILITY OF EACH INDIVIDUAL PARTY REFERENCING THIS PLAN TO DETERMINE THE EXACT LOCATION AND TYPE OF UNDERGROUND FACILITIES ON THE SITE. HAND EXCAVATE AT CRITICAL POINTS AS NECESSARY TO VERIFY LOCATIONS, SIZES, ELEVATIONS, FLOW LINES, ETC. IF A PROBLEM OR INTERFERENCE EXISTS, NOTIFY ARCHITECT/ENGINEER BEFORE PROCEEDING.

SITE GENERAL NOTES

A. UTILITIES SHOWN ON ELECTRICAL SITE PLAN ARE SCHEMATIC ONLY. ALL LOCATIONS SHOULD BE CONSIDERED APPROXIMATE UNLESS DIMENSIONED. VERIFY ALL SITE CONDITIONS AND DIMENSIONS ON SITE.

B. PROVIDE TRENCHING, PULL BOXES, BACKFILL, AND PATCHWORK AS REQUIRED TO COMPLETE SITE ELECTRICAL INSTALLATION.

C. REFER TO ELECTRIC AND LOW VOLTAGE UTILITY ENGINEERED DRAWINGS FOR ADDITIONAL CONDUITS, BOXES, AND ROUTING REQUIREMENTS. COORDINATE POLES, PADS, PRIMARY CABLE, TRANSFORMERS, METERS PEDESTALS, ETC.

D. COORDINATE ROUTING AND CRITICAL CROSSING POINTS OF ELECTRICAL CONDUITS WITH CIVIL AND UTILITY CONTRACTORS. ADJUST CONDUIT DEPTH AS REQUIRED.

E. REPAIR ALL AFFECTED SURFACES AND RESTORE TO EXISTING CONDITIONS AT COMPLETION OF PROJECT.

F. PROVIDE ALL SITE CONDUIT AS 1" MINIMUM, ALL CONDUCTORS AS #10 AWG CU. MINIMUM.

G. WARNING - CALL BEFORE YOU DIG: LAW REQUIRES ANYONE DOING EXCAVATION, FENCING, PLANTING OR DRILLING TO CALL 48 HOURS IN ADVANCE. HAND DIG WITHIN 18 INCHES OF ANY LOCATE MARK OR FLAG. ONE-CALL 811

KEYNOTES (#)

1 BORE (2) 1" CONDUIT FROM NEW PARKING LOT TO ISLAND. COORDINATE BORE WITH CITY AND IDOT. INSTALL (1) CONDUIT FOR LIGHTS AND (1) CONDUIT FOR FUTURE USE.

2 FLASHING LIGHT MOUNTED TO CROSSWALK SIGN. REFER TO CIVIL PLANS FOR SPECIFIC TYPE AND INSTALLATION.

3 INSTALL (1) 1" CONDUIT STUBBED FOR FUTURE. INSTALL #14 TRACER WIRE BACK TO FLASHING LIGHT.

4 INTERCEPT AND EXTEND FROM EXISTING HANDHOLE. PROVIDE 277V CIRCUIT TO NEW BOLLARDS.

5 PRIMARY CONDUIT/CONDUCTORS FROM UTILITY POLE. COORDINATE EXACT LOCATION AND INSTALLATION WITH MIDAMERICAN ENERGY.

6 INSTALL 11 X 18" X 24" TIER 22 HANDHOLE INSTALL FLUSH TO GRADE. LABEL "ELECTRICAL". (2) 1" CONDUIT BACK TO PANEL A WITH PULL STRING.

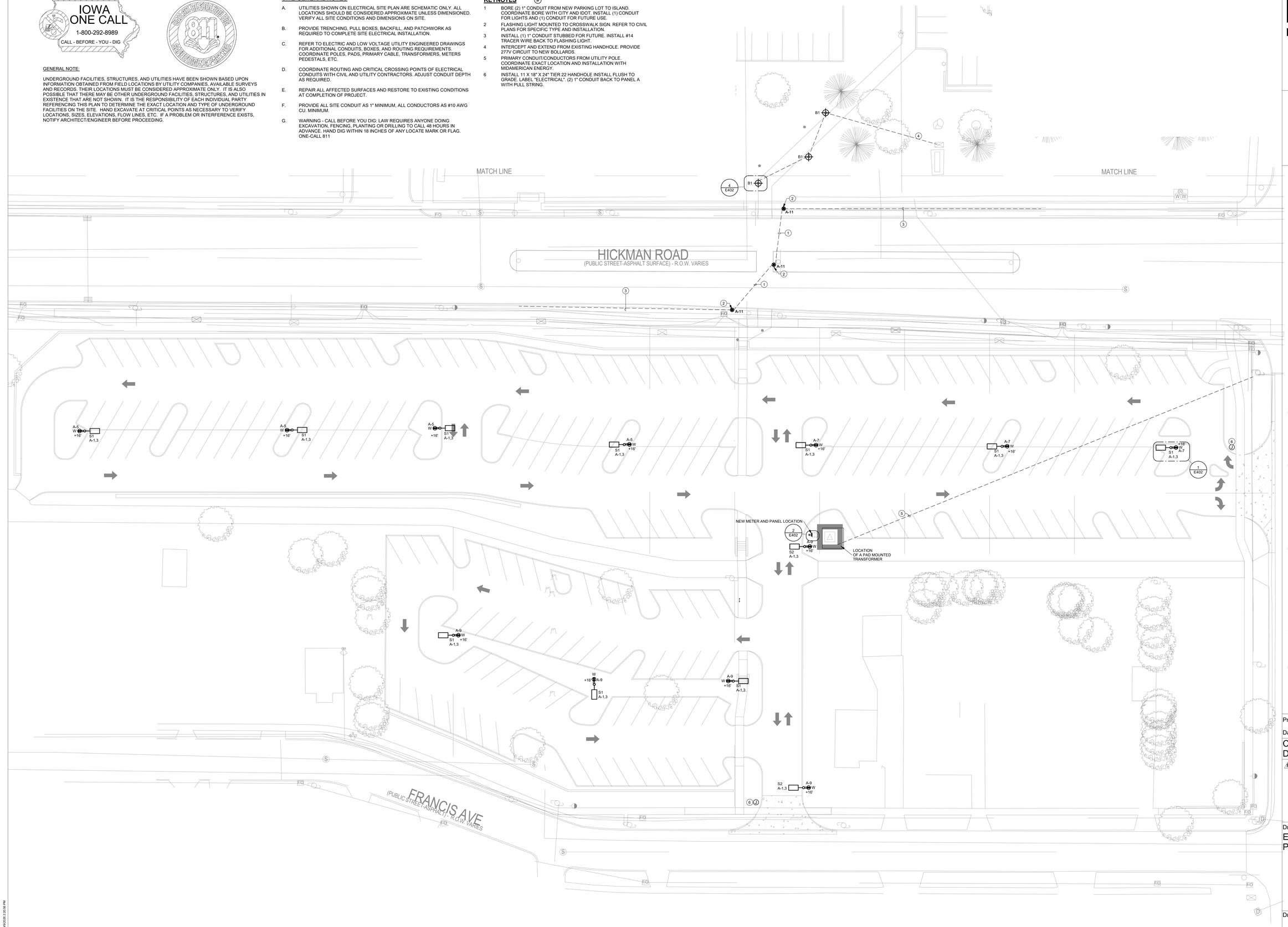

1 SITE PLAN
1" = 20'-0"

KCL ENGINEERING
300 4th St
West Des Moines, IA
50265
515-724-7938
info@kclengineering.com

BROADLAWNS MEDICAL CENTER HICKMAN ADDITIONAL PARKING

1826 HICKMAN
DES MOINES, IA 50314

Project No: 26169

Date: 09/10/2026

CONSTRUCTION DOCUMENTS

#	Revision	Date

Drawing Name:
ELECTRICAL SITE PLAN

Drawing #:
E001

Plot Date & Time: 9/9/2026 2:20:06 PM

© 2022 KCL Engineering L.L.C. These documents have been prepared specifically for this project, they are not suitable for use on other projects or in other locations without the expressed written approval and participation of KCL Engineering L.L.C. A limited license is granted to the owner/contractor to reproduce these documents or portions thereof, but only for use in connection with this project. Unauthorized reproduction is prohibited.

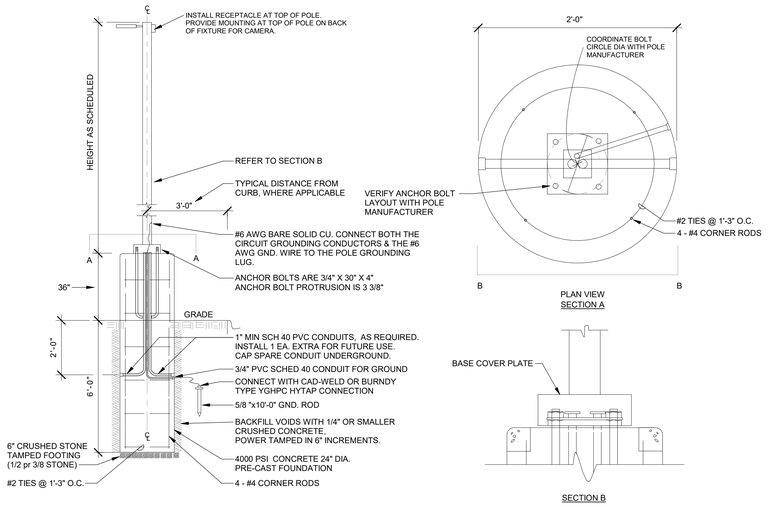

1 LIGHTING POLE BASE - PRECAST
NOT TO SCALE

LIGHTING FIXTURE SCHEDULE

NOTES:

1. ALL FIXTURES SHALL BE U.L. OR SIMILARLY LISTED.
2. INCLUDE A MINIMUM 1 YEAR WARRANTY FOR LIGHTING FIXTURES, WHERE NOT OTHERWISE SPECIFIED.
3. REFER TO ARCHITECTURAL DOCUMENTS FOR EXACT MOUNTING LOCATIONS, DETAILS, AND CONFIGURATIONS OF ALL LUMINAIRES. IF ARCHITECTURAL DRAWINGS DO NOT CLARIFY EXACT MOUNTING LOCATION OR DETAIL, ISSUE AN RFI FOR ARCHITECT TO SPECIFICALLY CLARIFY PRIOR TO FIXTURE ROUGH-IN.
4. VERIFY COMPATIBILITY OF LIGHT FIXTURES WITH ARCHITECTURAL CEILING PLAN, MATERIALS, ADJACENT CONSTRUCTION, AND ADJACENT FINISHES PRIOR TO SHOP DRAWINGS SUBMITTAL. ADJUST FIXTURE TYPE, CONSTRUCTION, FLANGE, AND OTHER COORDINATION DETAILS AS REQUIRED FOR CEILING TYPE. NOTIFY THE ARCHITECT OF ANY CONFLICTS WITH THE PROPOSED INSTALLATION.
5. CONTRACTOR IS RESPONSIBLE FOR ALL MISCELLANEOUS HARDWARE NECESSARY TO INSTALL AND SUPPORT THE LUMINAIRES.
6. AIM AND TARGET ADJUSTABLE INTERIOR AND EXTERIOR LIGHT FIXTURES UNDER THE OBSERVATION AND IN COMPLIANCE WITH RECOMMENDATIONS OF THE ARCHITECT. INCLUDE LABOR AND MATERIAL COSTS MADE NECESSARY BY THIS REQUIREMENT.
7. CONTRACTOR IS RESPONSIBLE FOR OBTAINING AND FILLING OUT ALL UTILITY REBATE FORMS FOR OWNER.

DESIGNED BY: EDH

TYPE	MANUFACTURER	MODEL	DESCRIPTION	FINISH	LUMENS	CRI	DRIVER TYPE	SOURCE-CCT	VOLTAGE	LOAD-VA	APPROVED EQUALS
B1	BEGA	84 706 light on 96 177 tube	42" TALL ROUND BOLLARD, INSTALL ON BASE AS SHOWN IN DETAILS. TYPE 3 DISTRIBUTION.	WHITE	1000	70	LED	4000K	277 V	31 VA	
S1	LITHONIA	DSX0 LED P5 40K 70CRI T5M	POLE MOUNT AREA LUMINAIRE, SQUARE POLE, TYPE 5 DISTRIBUTION 16' TALL SQUARE ALUMINUM POLE, RECEPTACLE ON OPPOSITE SIDE OF FIXTURE AS SHOWN ON SITE PLAN. PRE-DRILLED FOR LUMINAIRE LOCATIONS, ANCHOR BOLTS AND COVER TO MATCH POLE FINISH	WHITE	12,200	70	LED	4000K	240 V	92 VA	CREE, GARDCO, BEACON
S2	LITHONIA	DSX0 LED P3 40K 80CRI T3M EGS	POLE MOUNT AREA LUMINAIRE, SQUARE POLE, TYPE 3 DISTRIBUTION, EXTREME BACKLIGHT CONTROL SHIELD 16' TALL SQUARE ALUMINUM POLE,RECEPTACLE ON OPPOSITE SIDE OF FIXTURE AS SHOWN ON SITE PLAN. PRE-DRILLED FOR LUMINAIRE LOCATIONS, ANCHOR BOLTS AND COVER TO MATCH POLE FINISH	WHITE	6,500	70	LED	4000K	240 V	90 VA	CREE, GARDCO, BEACON

BRANCH PANEL: A

LOCATION: ON PEDESTAL
SUPPLY FROM: UTILITY
MOUNTING: SURFACE
ENCLOSURE: TYPE 3R

VOLTAGE: 120/240
PHASES: 1
WIRES: 3

SCCR RATING: 22,000
MAINS TYPE: MCB
MAINS RATING: 100 A
MCB RATING: 100 A

NOTES:
INTEGRAL SPD, MOUNTED ON UNISTRUT PER DETAIL, INSTALL PHOTOCELL ON SIDE OF PANEL TO CONTROL LIGHTING CIRCUIT.

CIRCUIT DESCRIPTION	P	AMP	CKT NO	A		B		CKT NO	AMP	P	CIRCUIT DESCRIPTION
SITE LIGHTING	2	20 A	1	550	0			2	20 A	1	SPARE
			3			550	0	4	20 A	1	SPARE
RECEPTACLE	1	20 A	5	720	0			6	20 A	1	SPARE
RECEPTACLE	1	20 A	7			540	0	8	20 A	1	SPARE
RECEPTACLE	1	20 A	9	900	0			10	20 A	1	SPARE
LIGHTING - BOLLARDS AND CROSS WALK	1	20 A	11			3		12			
			13					14			
INTEGRAL SPD	2	30 A	15			0		16			
			17	0				18			
				2,170 VA		1,093 VA					
				18 A		9 A					

LEGEND:
"G" INDICATES GFCI TYPE BREAKER, "L" INDICATES PROVIDE LOCKABLE HASP
"F" INDICATES RED LOCK-ON HASP

LOAD CLASSIFICATION	CONNECTED LOAD	DEMAND FACTOR	ESTIMATED DEMAND	PANEL TOTALS	
Lighting	1,103 VA	125.00%	1,379 VA		
Receptacle	2,160 VA	100.00%	2,160 VA	**TOTAL CONN. LOAD:**	3,263 VA
				TOTAL EST. DEMAND:	3,539 VA
				TOTAL CONN.:	14 A
				TOTAL EST. DEMAND:	15 A

NOTES:

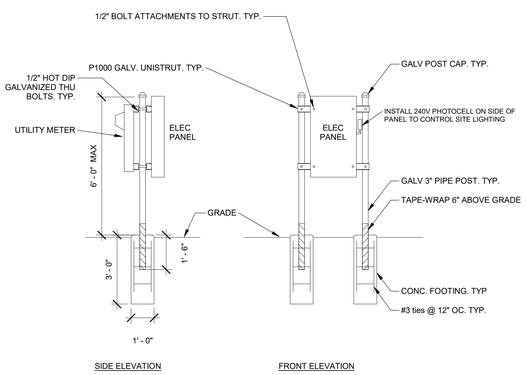

2 RP PANEL STRUT RACK
NOT TO SCALE

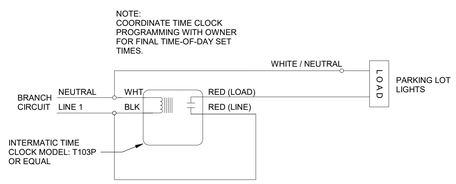

5 TIMECLOCK CONTROL WIRING DETAIL
NOT TO SCALE

FEEDER SCHEDULE				
TAG	PHASE	GROUND	CONDUCTOR MATERIAL	CONDUIT
103	1- SET (3) #3	-	COPPER	(1) 1 1/4"

SERVICE RESPONSIBILITY MATRIX

NOTES:
1. ITEMS NOT LISTED ARE CONTRACTOR FURNISHED/CONTRACTOR INSTALLED UNLESS OTHERWISE NOTED.

ABBREVIATIONS:
CP/CI : CONTRACTOR PROVIDED / CONTRACTOR INSTALLED.
CP/UI : CONTRACTOR PROVIDED / UTILITY INSTALLED.
UP/UI : UTILITY PROVIDED / UTILITY INSTALLED.
UP/CI : UTILITY PROVIDED / CONTRACTOR INSTALLED.

LABEL	CP/CI	CP/UI	UP/UI	UP/CI
PRIMARY CONDUIT	●			
PRIMARY CONDUCTORS			●	
XFR PAD	●			
SECONDARY CONDUIT	●			
SECONDARY CONDUCTORS	●			
METER ENCLOSURE	●			
METER				●
SECONDARY TERMINATIONS			●	

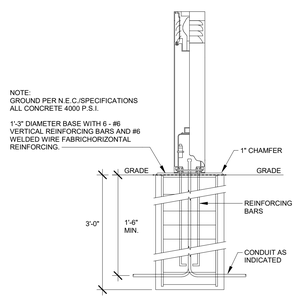

4 BOLLARD BASE - POURED IN PLACE
NOT TO SCALE

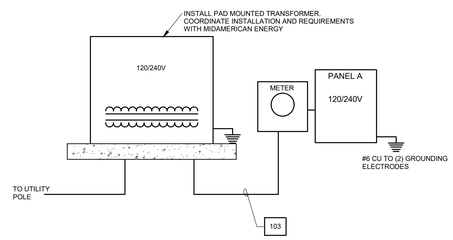

6 ONE-LINE DIAGRAM
NOT TO SCALE

RISER DIAGRAM GENERAL NOTES

A. DIAGRAM INDICATES OVERALL LAYOUT OF ELECTRICAL DISTRIBUTION SYSTEM. REFER TO FLOOR PLANS FOR EQUIPMENT LOCATIONS.

B. USE COPPER CONDUCTORS UNLESS OTHERWISE INDICATED.

C. MATCH NEUTRAL CONDUCTOR SIZE TO THE PHASE CONDUCTORS UNLESS OTHERWISE NOTED.

D. ALL WIRING SHALL BE IN RACEWAY AS NOTED. REFER TO SPECIFICATIONS FOR CONDUIT APPLICATION REQUIREMENTS.

E. INSTALL UTILITY TRANSFORMER PAD, METERING EQUIPMENT, AND SERVICE ENTRANCE FEEDERS IN ACCORDANCE WITH UTILITY COMPANY REQUIREMENTS.

KCL ENGINEERING
300 4th St
West Des Moines, IA
50265
515-724-7938
info@kclengineering.com

BROADLAWNS MEDICAL CENTER HICKMAN ADDITIONAL PARKING

1826 HICKMAN
DES MOINES, IA 50314

Project No: 26169
Date: 09/10/2026
CONSTRUCTION DOCUMENTS

#	Revision	Date

Drawing Name:
ELECTRICAL SCHEDULES AND DETAILS

Drawing #:
E402

Plot Date & Time: 9/10/26 2:20:08 PM

© 2022 KCL Engineering L.L.C. These documents have been prepared specifically for this project, they are not suitable for use on other projects or in other locations without the expressed written approval and participation of KCL Engineering L.L.C. A limited license is granted to the owner/contractor to reproduce these documents or portions thereof, but only for use in connection with this project. Unauthorized reproduction is prohibited.

BROADLAWNS PARKING LOT EXPANSION

1826 HICKMAN ROAD, DES MOINES, IOWA

DESIGN CODES & LOADS:

THE STRUCTURAL DESIGN OF THIS PROJECT SHALL BE IN ACCORDANCE WITH THE "2024 INTERNATIONAL BUILDING CODE" (IBC), "MINIMUM DESIGN LOADS FOR BUILDINGS AND OTHER STRUCTURES" (ASCE/SEI 7-22), AND APPLICABLE REFERENCED STANDARDS. ALL LOADS REQUIRED FOR DESIGN BY OTHERS AND NOT LISTED BELOW SHALL BE IN ACCORDANCE WITH THESE REQUIREMENTS.

BACKFILL:
- CLEAN GRANULAR (SIM TO IDOT 4115): γ = 130 psf, Ø = 42.5°
- SURCHARGE 50 psf
- HYDROSTATIC PRESSURE (MUST BE DRAINED) 0 psf

GENERAL NOTES:

ELEVATIONS NOTED THUS +(12'-8") ARE TO TOP OF SLABS, BEAMS OR OTHER STRUCTURAL FEATURES WITH REFERENCE TO THE FINISHED FIRST LEVEL FLOOR SLAB = (0'-0").

FIELD VERIFY ALL EXISTING CONDITIONS, DIMENSIONS, AND ELEVATIONS PRIOR TO FABRICATION AND/ OR CONSTRUCTION OF ANY ITEMS. REPORT ANY DISCREPANCIES TO OWNER AND ENGINEER.

CONTRACTOR SHALL NOT SCALE DRAWINGS. THE DIMENSIONS SHOWN ARE TO TAKE PRECEDENT OVER SCALING DOCUMENTS. THE CONTRACTOR SHALL TAKE FULL RESPONSIBILITY FOR ANY ERRORS AND REPAIR OF SAID WORK AS A RESULT OF SCALING DOCUMENTS.

THE CONTRACTOR/OWNER MUST CAREFULLY EXAMINE AND UNDERSTAND THESE DOCUMENTS, BEFORE STARTING ANY WORK. THE CONTRACTOR MUST NOTIFY THE ENGINEER OF ANY MISTAKES, MISSING INFORMATION, DISCREPANCIES, OR INCONSISTENCIES FOUND DURING THEIR REVIEW. THE ENGINEER WILL THEN REVIEW THE PROPOSED CORRECTIONS. CHANGES CANNOT BE MADE WITHOUT THE ENGINEER'S REVIEW AND THE OWNER'S APPROVAL. IF ANY DISCREPANCIES OR CONFLICTS ARISE AFTER WORK BEGINS, ITS THE CONTRACTOR'S RESPONSIBILITY TO FIX THEM. THE CONTRACTOR IS ALSO RESPONSIBLE FOR CORRECTING ANY ERRORS OR ISSUES NOT PREVIOUSLY BROUGHT TO THE ENGINEER'S ATTENTION. ANY DETAILS NOT EXPLICITLY SHOWN SHOULD BE SIMILAR TO COMPARABLE CONDITIONS DETAILED. IF THERE ARE ANY UNCERTAINITIES REGARDING CONSTRUCTION OR PROJECT COMPLETION, THE CONTRACTOR MUST ADDRESS THEM BEFORE SUBMITTING THE PROJECT.

STRUCTURAL DRAWINGS SHALL BE COORDINATED WITH SITE, ARCHITECTURAL, MECHANICAL, AND ELECTRICAL DRAWINGS AND BETWEEN DRAWINGS AND SPECIFICATIONS. REPORT ANY DISCREPANCIES AND/ OR INTERFERENCE PROBLEMS TO OWNER AND ENGINEER.

VERIFY SIZE AND LOCATION OF ALL OPENINGS OR INSERTS AS REQUIRED BY MECHANICAL, ELECTRICAL OR PLUMBING CONTRACTORS. ANY OPENINGS OR INSERTS SHOWN ON STRUCTURAL DRAWINGS ARE FOR GENERAL INFORMATION ONLY AND SHALL BE VERIFIED PRIOR TO FRAMING.

NO BEAMS, JOISTS, COLUMNS OR SLABS SHALL BE FIELD CUT OR MODIFIED WITHOUT THE STRUCTURAL ENGINEER'S WRITTEN APPROVAL.

SHOP DRAWINGS, MIX DESIGNS, PRODUCT DATA, AND CALCULATIONS SCHEDULED BELOW SHALL BE SUBMITTED FOR APPROVAL OF ALL STRUCTURAL COMPONENTS PRIOR TO FABRICATION AND/ OR CONSTRUCTION. SEE SPECIFICATIONS FOR SUBMITAL REQUIREMENTS.

ANY ENGINEERING DESIGN PROVIDED BY OTHERS AND SUBMITTED FOR REVIEW OR RECORD SHALL BEAR THE STAMP AND SIGNATURE OF A PROFESSIONAL ENGINEER LICENSED IN THE STATE WHERE THE PROJECT IS LOCATED.

CONTRACTOR IS RESPONSIBLE TO CHECK SHOP DRAWINGS, ETC. PRIOR TO SUBMITTAL TO ARCHITECT OR ENGINEER. SHOP DRAWINGS NOT CHECKED WILL BE RETURNED. CONTRACTOR SHALL VERIFY DIMENSIONS, QUANTITIES, AND COORDINATE WITH ALL OTHER TRADES.

SPECIAL-INSPECTIONS & TESTING SCHEDULE:

A SPECIAL INSPECTION AND TESTING PROGRAM SHALL BE PERFORMED IN ACCORDANCE WITH CHAPTER 17 OF THE IBC AND THE PROJECT MANUAL.

A SPECIAL INSPECTION AND TESTING PROGRAM REVIEW MEETING IS REQUIRED PRIOR TO CONSTRUCTION. THE STRUCTURAL ENGINEER, SPECIAL INSPECTOR, CITY INSPECTOR, GENERAL CONTRACTOR, AND ALL SUBCONTRACTORS PERFORMING STRUCTURAL WORK SHALL BE IN ATTENDANCE.

THE FOLLOWING ITEMS SHALL BE INCLUDED IN THE SPECIAL INSPECTION AND TESTING PROGRAM:
1. SPECIAL GRADING, EXCAVATION AND FILLING
   - A. SUBGRADE PREPARATION
   - B. VERIFY COMPACTION OF FILL MATERIAL
   - C. VERIFY DESIGN BEARING CAPACITY
   - D. EXPANSIVE SOIL CHARACTERISTICS
   - E. VERIFY CLEAN BACKFILL (IA D.O.T. 4115)
2. CONCRETE
   - A. AIR TESTS
   - B. SLUMP TESTS
   - C. CONCRETE TEMPERATURE
   - D. COMPRESSION TESTS
   - E. POST INSTALLED ANCHORS

CONSTRUCTION PROCEDURES & SAFETY REQUIREMENTS:

COMPLY WITH ALL APPLICABLE CITY, COUNTY, STATE, AND FEDERAL LAWS, INCLUDING THE OCCUPATIONAL SAFETY AND HEALTH ACT (OSHA) AND REGULATIONS ADOPTED PURSUANT THERETO.

THE STRUCTURAL CONTRACT DOCUMENTS REPRESENT THE FINISHED STRUCTURE. THEY DO NOT INDICATE THE MEANS AND METHODS OF CONSTRUCTION, UNLESS NOTED OR INDICATED OTHERWISE.

ENGAGE PROPERLY QUALIFIED PERSONS TO DETERMINE WHERE AND HOW TEMPORARY PRECATIONARY MEASURES SHALL BE USED.

PROVIDE ALL MEASURES NECESSARY TO PROTECT THE WORKERS AND ALL OTHER PERSONS DURING CONSTRUCTION. PROVIDE ALL NECESSARY MEASURES TO AVOID EXCESSIVE STRESSES AND TO HOLD THE STRUCTURAL ELEMENTS IN PLACE DURING CONSTRUCTION. SUCH MEASURES SHALL INCLUDE, BUT NOT BE LIMITED TO: BRACING, SHORING FOR CONSTRUCTION EQUIPMENT, SHORING FOR EARTH BANKS, FORMS, SCAFFOLDING, PLANKING, SAFETY NETS, SUPPORT AND BRACING FOR CRANES AND HOISTS, GUYING, ETC...

SUPERVISE AND DIRECT THE WORK SO AS TO MAINTAIN SOLE RESPONSIBILITY FOR ALL CONSTRUCTION MEANS, METHODS, TECHNIQUES, SEQUENCES, AND PROCEDURES.

OBSERVATION VISITS TO THE SITE BY STRUCTURAL ENGINEER'S FIELD REPRESENTATIVES SHALL NOT INCLUDE ABOVE NOTED ITEMS.

CONCRETE AND REINFORCEMENT:

CONCRETE WORK SHALL BE IN ACCORDANCE WITH "SPECIFICATIONS FOR STRUCTURAL CONCRETE FOR BUILDINGS (ACI 301)" AND "BUILDING CODE REQUIREMENTS FOR STRUCTURAL CONCRETE (ACI 318)" UNLESS NOTED OTHERWISE.

PROVIDE CONCRETE WITH MINIMUM 28 DAY COMPRESSIVE STRENGTH (f'c) AS SHOWN BELOW:

FOOTINGS	3,500 psi
FOUNDATION WALLS	4,000 psi
ALL OTHER CONCRETE	4,000 psi

PROVIDE CONCRETE WITH MAXIMUM WATER/CEMENT RATIO AS SHOWN BELOW:

3,500 psi	0.50
4,000 psi	0.45
5,000 psi	0.40

CONTRACTOR SHALL SUBMIT CONCRETE MIX DESIGNS FOR EACH CLASS OF CONCRETE TO ENGINEER FOR WRITTEN APPROVAL MINIMUM OF 14 DAYS PRIOR TO PLACING CONCRETE.

CONCRETE SHALL CONSIST OF THE FOLLOWING:

PORTLAND CEMENT	ASTM C150, TYPE I/II
NORMAL WEIGHT AGGREGATES	ASTM C33
POTABLE WATER	ASTM C94

CONCRETE AND REINFORCEMENT CONT.:

REPLACEMENT OF PORTLAND CEMENT WITH FLY ASH SHALL NOT EXCEED 15% OF ALL CEMENTITIOUS MATERIALS. MAXIMUM AGGREGATE SIZE SHALL BE 1".

ALL CONCRETE EXPOSED TO EARTH OR WEATHER SHALL HAVE AN AIR CONTENT AT POINT OF PLACEMENT OF 4% TO 7%.

WATER REDUCING ADMIXTURES (PLASTICIZERS AND SUPER PLASTICIZERS) MAY BE USED WHEN INCLUDED IN THE APPROVED CONCRETE MIX DESIGN.

NO MATERIAL CONTAINING CALCIUM CHLORIDE, SALT OR ANTIFREEZE AGENTS IS PERMITTED FOR USE IN CONCRETE.

SLUMP SHALL BE 3" TO 5" MAXIMUM FOR CONCRETE MIXES WITHOUT WATER REDUCING ADMIXTURES AND 6" TO 8" MAXIMUM WHEN WATER REDUCING ADMIXTURES ARE INCLUDED IN THE MIX DESIGN. REFER TO SPECIFICATIONS.

HOT WEATHER CONCRETE OPERATIONS SHALL BE IN ACCORDANCE WITH ACI 305.

COLD WEATHER CONCRETE OPERATIONS SHALL BE IN ACCORDANCE WITH ACI 306.

REINFORCING SHALL BE DETAILED AND PLACED IN ACCORDANCE WITH "DETAILS AND DETAILING OF CONCRETE REINFORCEMENT" (ACI 315), UNLESS DETAILED OR NOTED OTHERWISE.

REINFORCING SHALL CONFORM TO THE FOLLOWING:

DEFORMED BARS	ASTM A615, GRADE 60
WELDED DEFORMED BARS	ASTM A706, GRADE 60
WELDED WIRE FABRIC (MATS ONLY)	ASTM A185

REINFORCING STEEL SHALL BE SECURELY WIRED IN PLACE AND SUPPORTED PRIOR TO PLACING CONCRETE.

LAP ALL REINFORCING SPLICES THE GREATER OF 48 BAR DIAMETERS OR 2'-0" IN FOOTINGS & FOUNDATIONS AND SLABS-ON-GRADE UNLESS NOTED OTHERWISE. REINFORCING SPLICES AT ALL OTHER LOCATIONS SHALL HAVE CLASS B TENSION SPLICES.

PROVIDE CORNER BARS AT ALL INTERSECTIONS IN WALLS AND FOOTINGS. LAP 2'-0" WITH HORIZONTAL BARS IN EACH DIRECTION. MATCH SIZE AND SPACING OF HORIZONTAL BARS.

PROVIDE (2) #5 EACH SIDE OF FRAMED OPENINGS IN WALLS. EXTEND 2'-0" BEYOND OPENING EDGES. PROVIDE #5 DIAGONAL BARS X 48" IN CORNERS.

PROVIDE KEY WAYS IN CONCRETE WALLS AT CONSTRUCTION JOINTS. KEY WAYS SHALL BE 1 1/2" WIDE X 1/2" DEEP UNLESS NOTED OTHERWISE. EXTEND REINFORCING THROUGH JOINTS.

SPLICES IN VERTICAL REINFORCING ARE NOT PERMITTED, UNLESS NOTED OTHERWISE.

PROVIDE MINIMUM CONCRETE COVER OVER REINFORCING AS FOLLOWS:
- CAST AGAINST AND PERMANENTLY EXPOSED TO EARTH = 3"
- EXPOSED TO EARTH OR WEATHER = 2"
- NOT EXPOSED TO EARTH OR WEATHER OR IN CONTACT WITH THE GROUND = 2"

PROVIDE 3/4" CHAMFER ON ALL EXPOSED EDGES OF CONCRETE.

FOUNDATIONS:

FOUNDATION DESIGN IS BASED ON THE GEOTECHNICAL REPORT PREPARED FOR THIS PROJECT COMPLETED BY ALLENDER BUTZKE ENGINEERS, REPORT NUMBER PN 261252, DATED JUNE 16, 2026.

FOUNDATIONS SHALL BEAR ON NATIVE SOIL OR ON PROPERLY COMPACTED, ENGINEERED FILL EXTENDED TO NATIVE SOIL. FOUNDATION DESIGN REQUIRES A MINIMUM NET ALLOWABLE BEARING PRESSURE AS FOLLOWS:
2000 psf AT RETAINING WALLS

IF UNSUITABLE BEARING SOILS ARE FOUND (SEE SPECIAL INSPECTIONS & GEOTECH REPORT), OVER-EXCAVATE NATIVE SOILS BELOW FOOTINGS AND FOUNDATIONS AND REPLACE WITH COMPACTED, ENGINEERED FILL AS REQUIRED BY GEOTECHNICAL ENGINEER. OVER-EXCAVATION AND BACKFILL PROCEDURE SHALL EXTEND 9" LATERALLY BEYOND EDGE OF FOOTING IN ALL DIRECTIONS FOR EACH FOOT OF OVER-EXCAVATION DEPTH.

FOOTING ELEVATIONS AND ALLOWABLE BEARING CAPACITIES ARE ESTIMATED PER THE IBC. BEARING CAPACITIES AND EXPANSIVE SOIL PROPERTIES SHALL BE FIELD VERIFIED BY THE GEOTECHNICAL ENGINEER AS PART OF THE SPECIAL INSPECTION PROGRAM. NOTIFY THE STRUCTURAL ENGINEER IF INADEQUATE CONDITIONS ARE ENCOUNTERED.

PROVIDE SLEEVES FOR ALL PIPES, UTILITY LINES, AND OTHER PENETRATIONS THROUGH WALLS. CORE DRILLING IS NOT PERMITTED.

LICENSED PROFESSIONAL ENGINEER
LUKE LOGAN
27498
IOWA

I HEREBY CERTIFY THAT THIS ENGINEERING DOCUMENT WAS PREPARED BY ME OR UNDER MY DIRECT PERSONAL SUPERVISION AND THAT I AM A DULY REGISTERED PROFESSIONAL ENGINEER UNDER THE LAWS OF THE STATE OF IOWA.
THIS NOTICE COVERS DRAWINGS S SHEETS

SIGNATURE:
NAME: LUKE LOGAN, P.E.
DATE: 10 Sept 2026 27498

MY REGISTRATION EXPIRES ON 31-DECEMBER-2025

DRAWING INDEX:

S0.1: GENERAL NOTES & PLAN VIEW
S5.1: DETAILS

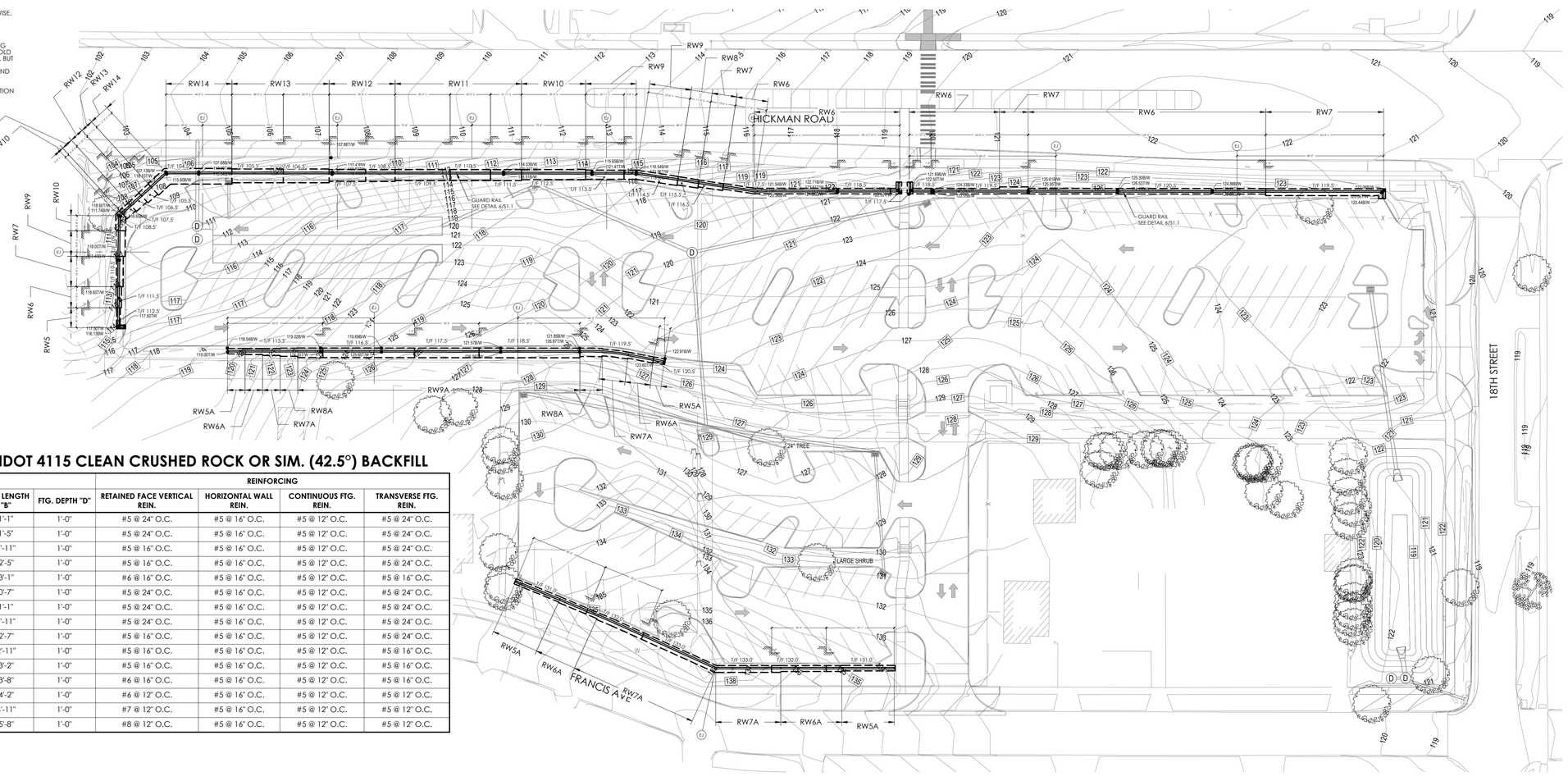

PLAN VIEW
SCALE: 1/32" = 1'-0"

RETAINING WALL & FOOTING SCHEDULE - IDOT 4115 CLEAN CRUSHED ROCK OR SIM. (42.5°) BACKFILL

MARK	WALL & FOOTING DIMENSIONS						REINFORCING			
	WALL "L" (MAX)	WALL "T"	FTG. WIDTH "W"	TOE LENGTH "A"	HEEL LENGTH "B"	FTG. DEPTH "D"	RETAINED FACE VERTICAL REIN.	HORIZONTAL WALL REIN.	CONTINUOUS FTG. REIN.	TRANSVERSE FTG. REIN.
RW5A	5'-0"	0'-10"	3'-0"	1'-1"	1'-1"	1'-0"	#5 @ 24" O.C.	#5 @ 16" O.C.	#5 @ 12" O.C.	#5 @ 24" O.C.
RW6A	6'-0"	0'-10"	3'-3"	1'-0"	1'-5"	1'-0"	#5 @ 24" O.C.	#5 @ 16" O.C.	#5 @ 12" O.C.	#5 @ 24" O.C.
RW7A	7'-0"	0'-10"	3'-9"	1'-0"	1'-11"	1'-0"	#5 @ 16" O.C.	#5 @ 16" O.C.	#5 @ 12" O.C.	#5 @ 24" O.C.
RW8A	8'-0"	0'-10"	4'-6"	1'-3"	2'-5"	1'-0"	#5 @ 16" O.C.	#5 @ 16" O.C.	#5 @ 12" O.C.	#5 @ 24" O.C.
RW9A	9'-0"	0'-10"	5'-3"	1'-4"	3'-1"	1'-0"	#6 @ 16" O.C.	#5 @ 16" O.C.	#5 @ 12" O.C.	#5 @ 16" O.C.
RW5	SEE PLAN	0'-10"	2'-0"	0'-7"	0'-7"	1'-0"	#5 @ 24" O.C.	#5 @ 16" O.C.	#5 @ 12" O.C.	#5 @ 24" O.C.
RW6	SEE PLAN	0'-10"	3'-0"	1'-1"	1'-1"	1'-0"	#5 @ 24" O.C.	#5 @ 16" O.C.	#5 @ 12" O.C.	#5 @ 24" O.C.
RW7	SEE PLAN	0'-10"	3'-9"	1'-0"	1'-11"	1'-0"	#5 @ 24" O.C.	#5 @ 16" O.C.	#5 @ 12" O.C.	#5 @ 24" O.C.
RW8	SEE PLAN	0'-10"	4'-6"	1'-1"	2'-7"	1'-0"	#5 @ 16" O.C.	#5 @ 16" O.C.	#5 @ 12" O.C.	#5 @ 24" O.C.
RW9	SEE PLAN	0'-10"	5'-0"	1'-3"	2'-11"	1'-0"	#5 @ 16" O.C.	#5 @ 16" O.C.	#5 @ 12" O.C.	#5 @ 16" O.C.
RW10	SEE PLAN	0'-10"	5'-6"	1'-6"	3'-2"	1'-0"	#5 @ 16" O.C.	#5 @ 16" O.C.	#5 @ 12" O.C.	#5 @ 16" O.C.
RW11	SEE PLAN	0'-10"	6'-0"	1'-6"	3'-8"	1'-0"	#6 @ 16" O.C.	#5 @ 16" O.C.	#5 @ 12" O.C.	#5 @ 16" O.C.
RW12	SEE PLAN	0'-10"	6'-6"	1'-6"	4'-2"	1'-0"	#6 @ 12" O.C.	#5 @ 16" O.C.	#5 @ 12" O.C.	#5 @ 12" O.C.
RW13	SEE PLAN	0'-10"	7'-6"	1'-9"	4'-11"	1'-0"	#7 @ 12" O.C.	#5 @ 16" O.C.	#5 @ 12" O.C.	#5 @ 12" O.C.
RW14	SEE PLAN	0'-10"	8'-6"	2'-0"	5'-8"	1'-0"	#8 @ 12" O.C.	#5 @ 16" O.C.	#5 @ 12" O.C.	#5 @ 12" O.C.

FOR APPROVAL

TOMETICH ENGINEERING, INC.
10501 Buena Vista Court Urbandale, IA 50322
(p) 515.280.8022 (f) 515.727.9124
http://www.tometichengineering.com

BROADLAWNS PARKING LOT EXPANSION
1826 HICKMAN ROAD
DES MOINES, IOWA

ISSUE / REVISION

No.	Description	Date
	FOR APPROVAL	09-10-2026

DATE: 09-10-2026
FILE: U26-153
ENG: LJL DSN: CJA

S0.1

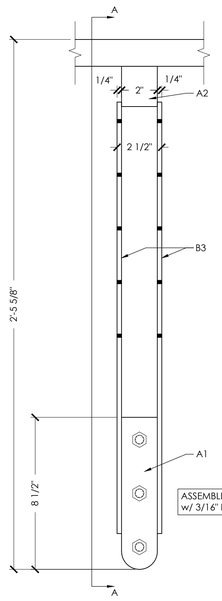

BALLASTER & GUARD RAIL
FULL ASSEMBLY

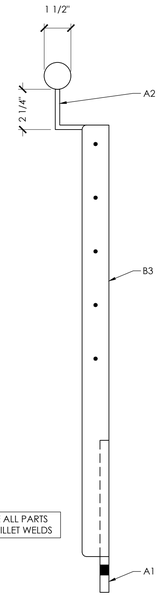

A-A

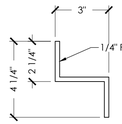

A2
QUANTITY - 1 PER ASSEMBLY

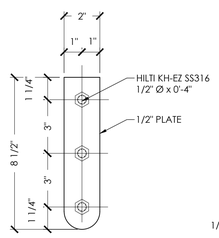

A1
QUANTITY - 1 PER ASSEMBLY

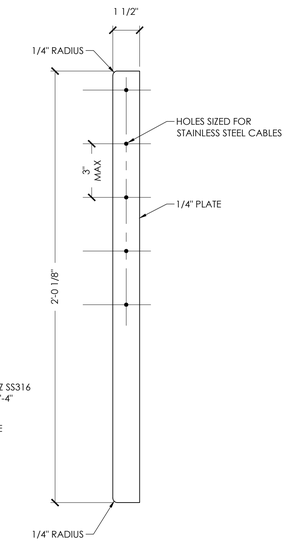

B3
QUANTITY - 2 PER ASSEMBLY

BALLASTER ASSEMBLY (7 / S1.1)
SCALE: 3" = 1'-0"

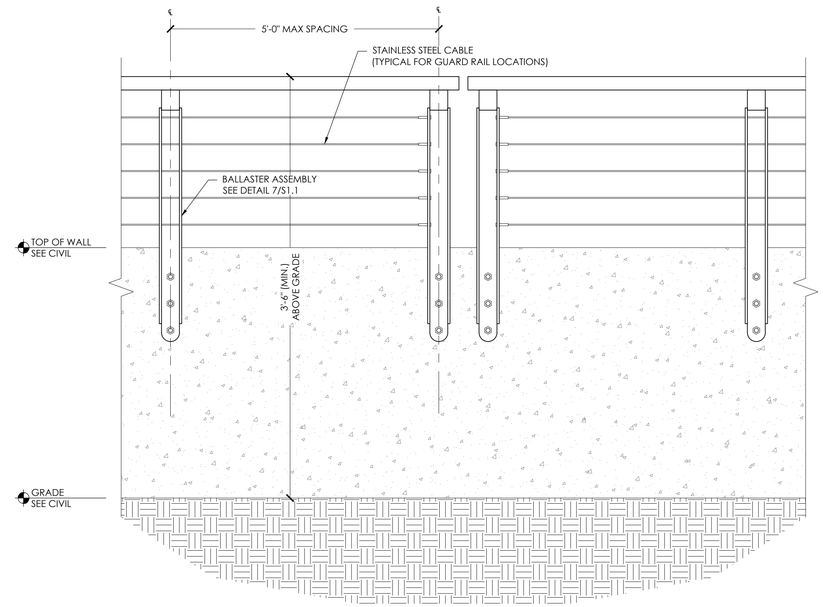

GUARD RAIL DETAIL (6 / S1.1)
SCALE: 1 1/2" = 1'-0"

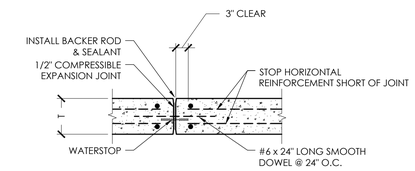

EXPANSION JOINT
(SEE PLAN FOR LOCATIONS TYPICALLY 80'-0" O.C. MAX)

WALL EXPANSION JOINT DETAIL (5 / S1.1)
SCALE: 3/4" = 1'-0"

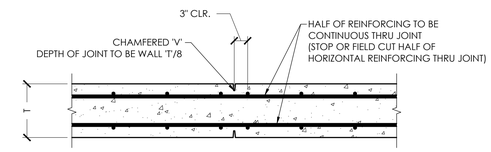

CONTROL JOINT
(@ 20'-0" O.C. MAX.)
(CONTRACTOR COORDINATE LOCATIONS w/ OWNER)

WALL CONTROL JOINT DETAILS (4 / S1.1)
SCALE: 3/4" = 1'-0"

RETAINING WALL & FOOTING SCHEDULE - IDOT 4115 CLEAN CRUSHED ROCK OR SIM. (42.5°) BACKFILL

MARK	WALL & FOOTING DIMENSIONS						REINFORCING			
	WALL "L" (MAX)	WALL "T"	FTG. WIDTH "W"	TOE LENGTH "A"	HEEL LENGTH "B"	FTG. DEPTH "D"	RETAINED FACE VERTICAL REIN.	HORIZONTAL WALL REIN.	CONTINUOUS FTG. REIN.	TRANSVERSE FTG. REIN.
RW5A	5'-0"	0'-10"	3'-0"	1'-1"	1'-1"	1'-0"	#5 @ 24" O.C.	#5 @ 16" O.C.	#5 @ 12" O.C.	#5 @ 24" O.C.
RW6A	6'-0"	0'-10"	3'-3"	1'-0"	1'-5"	1'-0"	#5 @ 24" O.C.	#5 @ 16" O.C.	#5 @ 12" O.C.	#5 @ 24" O.C.
RW7A	7'-0"	0'-10"	3'-9"	1'-0"	1'-11"	1'-0"	#5 @ 16" O.C.	#5 @ 16" O.C.	#5 @ 12" O.C.	#5 @ 24" O.C.
RW8A	8'-0"	0'-10"	4'-6"	1'-3"	2'-5"	1'-0"	#5 @ 16" O.C.	#5 @ 16" O.C.	#5 @ 12" O.C.	#5 @ 24" O.C.
RW9A	9'-0"	0'-10"	5'-3"	1'-4"	3'-1"	1'-0"	#6 @ 16" O.C.	#5 @ 16" O.C.	#5 @ 12" O.C.	#5 @ 16" O.C.
RW5	SEE PLAN	0'-10"	2'-0"	0'-7"	0'-7"	1'-0"	#5 @ 24" O.C.	#5 @ 16" O.C.	#5 @ 12" O.C.	#5 @ 24" O.C.
RW6	SEE PLAN	0'-10"	3'-0"	1'-1"	1'-1"	1'-0"	#5 @ 24" O.C.	#5 @ 16" O.C.	#5 @ 12" O.C.	#5 @ 24" O.C.
RW7	SEE PLAN	0'-10"	3'-9"	1'-0"	1'-11"	1'-0"	#5 @ 24" O.C.	#5 @ 16" O.C.	#5 @ 12" O.C.	#5 @ 24" O.C.
RW8	SEE PLAN	0'-10"	4'-6"	1'-1"	2'-7"	1'-0"	#5 @ 16" O.C.	#5 @ 16" O.C.	#5 @ 12" O.C.	#5 @ 24" O.C.
RW9	SEE PLAN	0'-10"	5'-0"	1'-3"	2'-11"	1'-0"	#5 @ 16" O.C.	#5 @ 16" O.C.	#5 @ 12" O.C.	#5 @ 16" O.C.
RW10	SEE PLAN	0'-10"	5'-6"	1'-6"	3'-2"	1'-0"	#5 @ 16" O.C.	#5 @ 16" O.C.	#5 @ 12" O.C.	#5 @ 16" O.C.
RW11	SEE PLAN	0'-10"	6'-0"	1'-6"	3'-8"	1'-0"	#6 @ 16" O.C.	#5 @ 16" O.C.	#5 @ 12" O.C.	#5 @ 16" O.C.
RW12	SEE PLAN	0'-10"	6'-6"	1'-6"	4'-2"	1'-0"	#6 @ 12" O.C.	#5 @ 16" O.C.	#5 @ 12" O.C.	#5 @ 12" O.C.
RW13	SEE PLAN	0'-10"	7'-6"	1'-9"	4'-11"	1'-0"	#7 @ 12" O.C.	#5 @ 16" O.C.	#5 @ 12" O.C.	#5 @ 12" O.C.
RW14	SEE PLAN	0'-10"	8'-6"	2'-0"	5'-8"	1'-0"	#8 @ 12" O.C.	#5 @ 16" O.C.	#5 @ 12" O.C.	#5 @ 12" O.C.

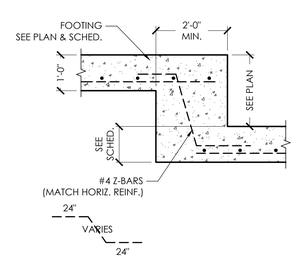

SPREAD FOOTING STEP (3 / S1.1)
SCALE: 1/2" = 1'-0"

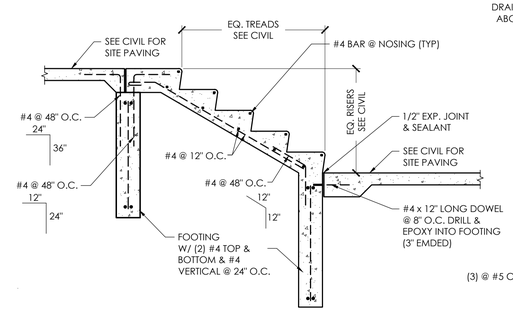

EXTERIOR CONCRETE STAIR SECTION (2 / S1.1)
SCALE: 1/2" = 1'-0"

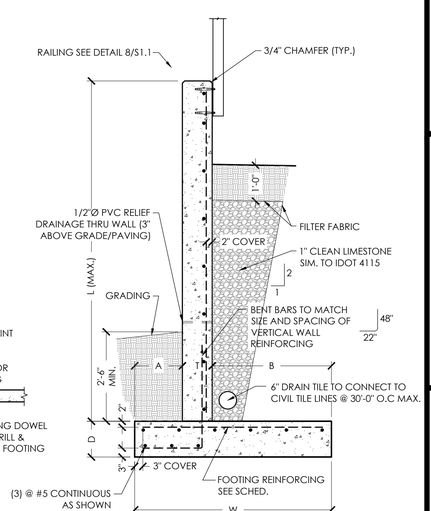

RETAINING WALL SECTION - PARKING (1 / S1.1)
SCALE: 1/2" = 1'-0"

FOR APPROVAL

TOMETICH ENGINEERING, INC.
10501 Buena Vista Court Urbandale, IA 50322
(p) 515.280.8022 (f) 515.727.9124
http://www.tometichengineering.com

BROADLAWNS PARKING LOT EXPANSION
1826 HICKMAN ROAD
DES MOINES, IOWA

ISSUE / REVISION

No.	Description	Date
	FOR APPROVAL	09-10-2026

DATE: 09-10-2026
FILE: U26-153
ENG: LJL DSN: CJA

S1.1