TOUGHER > FASTER > SIMPLER

WATSON DRILL RIGS

EX60

NOMINAL TORQUE
77,000 ft-lb, 104 kNm
ACTUAL TORQUE
64,000 ft-lb, 87 kNm

SPIN OFF 100 rpm
LINEPULL 25,000 lb,111 kN
WEIGHT 82,000 lbs, 37.2 mT
MAX DEPTH 94 ft, 28 m

WATSONUSA.COM
800-927-8486

MADE IN USA

100% WATSON OWNED

DRILL MORE HOLES

EXCADRILL - EX60

4015 South Freeway
Fort Worth, Texas 76110
800-927-8486
Fax 817-927-8716
sales@watsonusa.com

100% WATSON OWNED

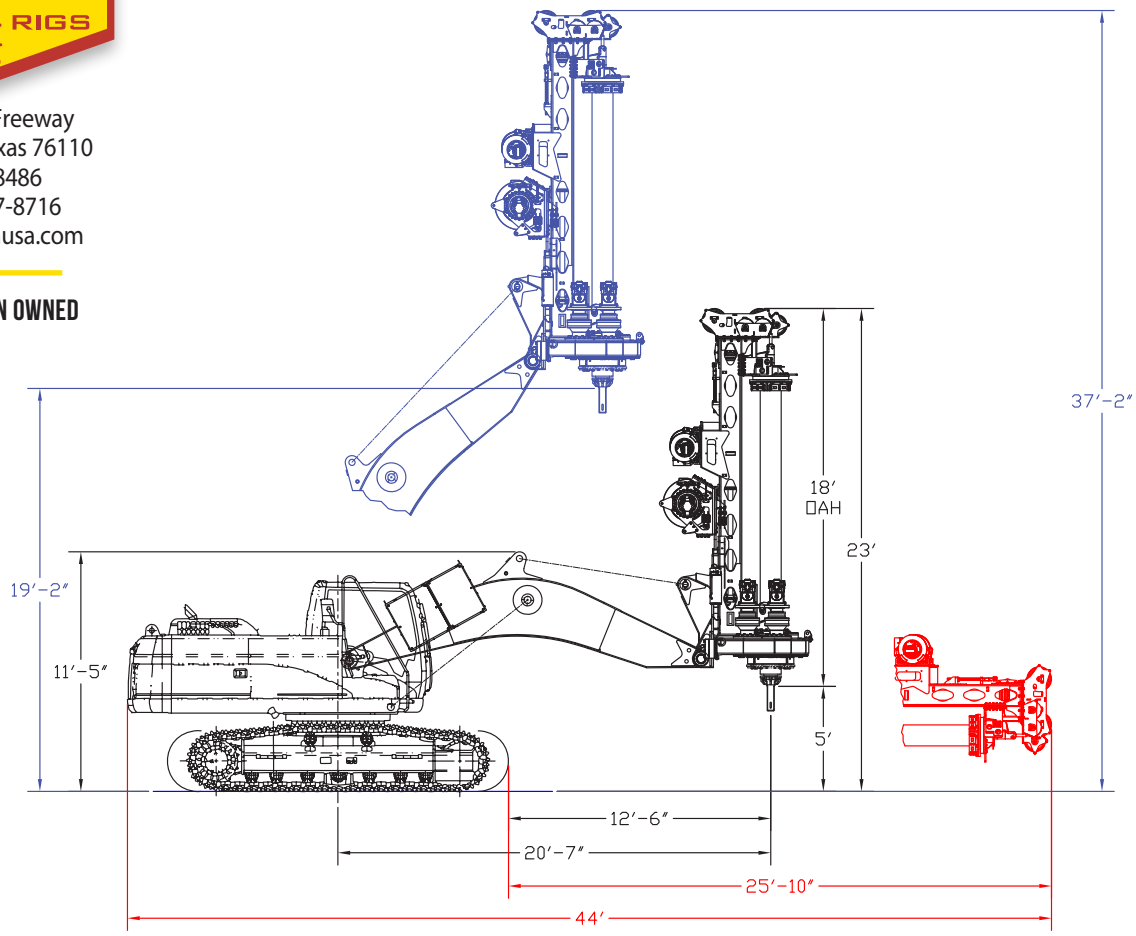

PERFORMANCE

NOMINAL TORQUE	77,000 ft-lbs 104 kNm
ACTUAL TORQUE	64,000 ft-lb 87 kNm
DRILL SPEED	0 TO 60 rpm
SPIN OFF	100 rpm
KELLY WINCH w/Freefall	25,000 lbs 111 kN
SERVICE WINCH	12,000 lbs 53 kN
CROWD FORCE	25,000 lbs 111 kN

CONFIGURATION

BASE MACHINE	CAT 330
TRANSPORT WEIGHT	92,500 lbs 42,000 kgs
DRILLING DEPTH (5-ELEMENT)	94 ft 29.6 M
CROWD STROKE	10 ft 3 m
SIDE TILT	7° left/right

DEFINING FEATURES

Dual Drive Rotary with shiftless operation from 64,000 ft-lb to 100 rpm

Full excavator horsepower delivered to the tool

Large diameter Rotary and **bigger bars** means less wear

Full Top Crowd drills straighter holes and simplifies bar locking

Single layer, grooved Kelly winch drum for max linepull and longer rope life

Controlled freefall, 2-speed Kelly winch for faster cycle times

Optimized hydraulic interface for simpler operation and maintenance

STANDARD OPTIONS

Six mast heights from 16.5′ to 25′ (18′ shown above)

Up to 5 element Kelly bar for depths to 94 ft (28 m)

Round locking or square friction kellys

Service Winch - 8,000 lbs

Excavator classes from 24 – 36 metric tons

5/21 dg © 2021 Watson, Inc.