SONY FX6
Z-Finder Recoil

The Sony FX6 Z-Finder Recoil Rig is a shoulder rig designed specifically for the Sony FX6 camera. This is a Next Generation Recoil rig designed for optimal balance and comfort when shoulder mounted or on a tripod. With lenses and cameras being similar weights, the balance point is where the lens meets the camera body. In a shoulder mount rig, the balance point needs to be directly over your shoulder, which puts the camera behind you. The Recoil rig adjusts for that balance point and relocates focus, monitoring, and camera controls forward. This creates a lighter, shorter, and properly balanced rig.

Check out our tutorial videos at zacuto.com

Call us at 312-863-3456

Optional Accessories

Gripper Battery

Z-Drive

Small Z-Rail Arm

Gratical Eye

Top Plate

1. Align Top Plate on camera as shown. Thread in screws (x4) and tighten.

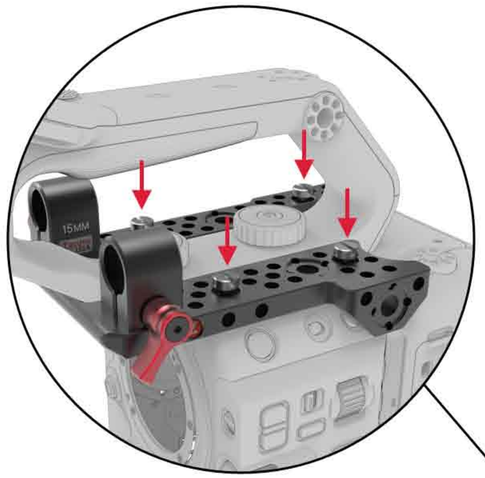

FX6 Handle Mount

1. Attach FX6 Handle Mount to camera's top handle. Multiple positions available.

Axis Micro Assembly

1. Attach Rosette Mount to Axis Mini.
2. Slide whole assembly into FX6 Handle Mount.

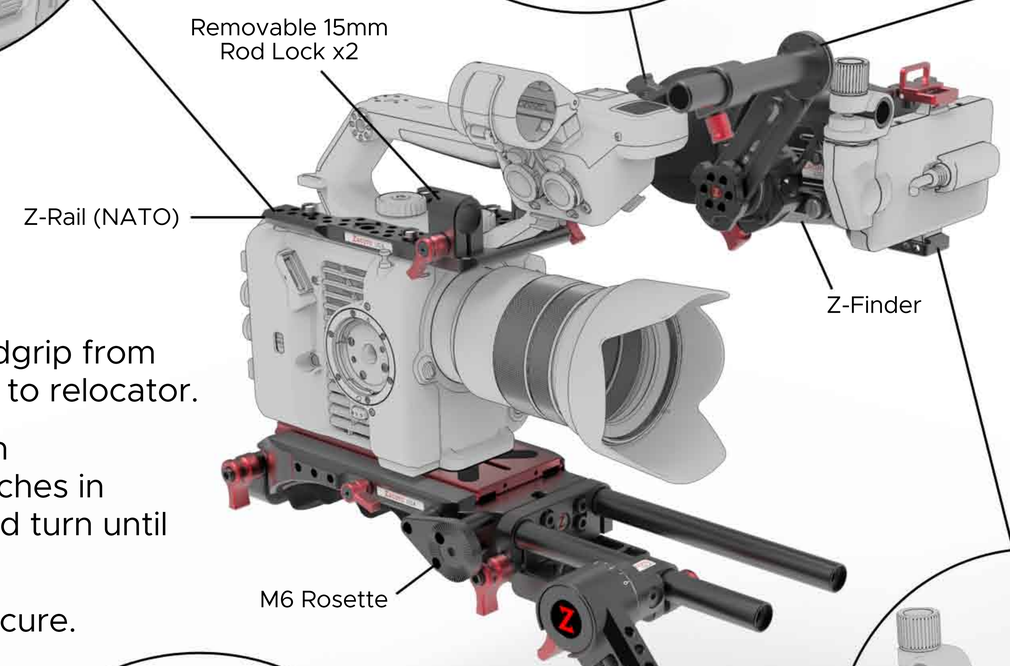

Trigger Grip

1. Remove Sony handgrip from camera and attach to relocator.
2. Align 3 prongs with corresponding notches in relocator. Insert and turn until lock "clicks".
3. Tighten knob to secure.

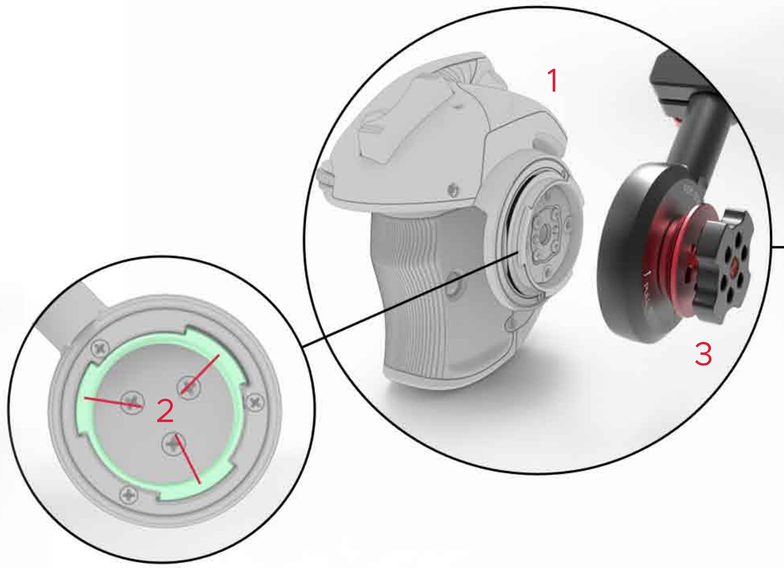

Z-Finder
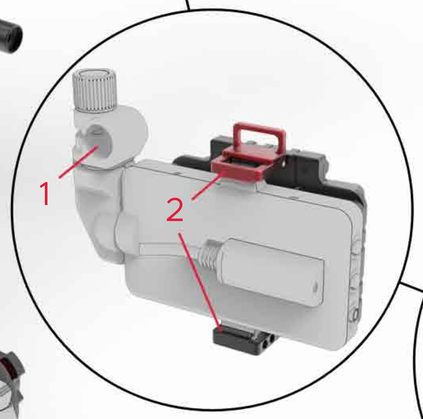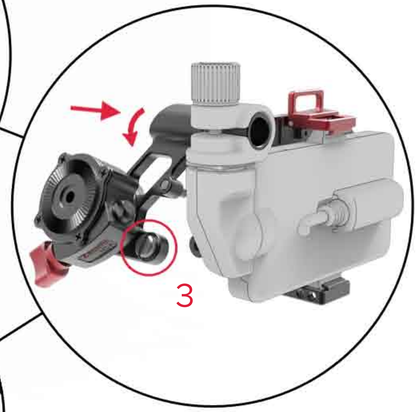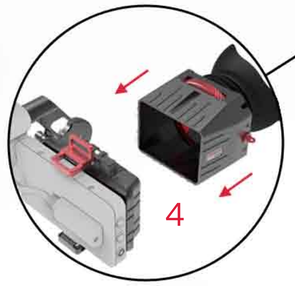
1. Orient LCD Rod Clamp as shown.
2. Attach Z-Finder frame to LCD by attaching lower black hook first then secure with top red toggle latch.
3. Insert Rosette Mount into LCD Assembly and rotate to attach captive screw.
4. Attach 2.5x Z-Finder.