GROHE

ENJOY WATER®

1.

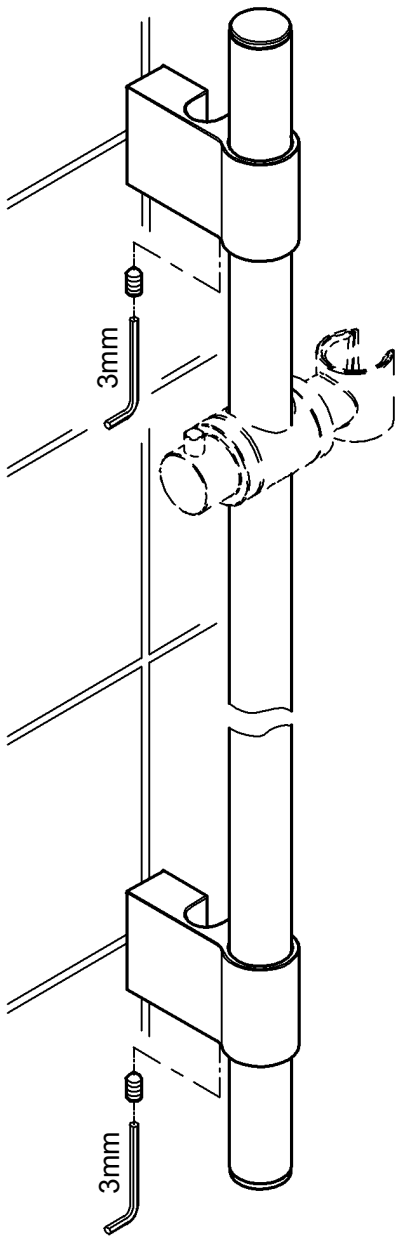

2.

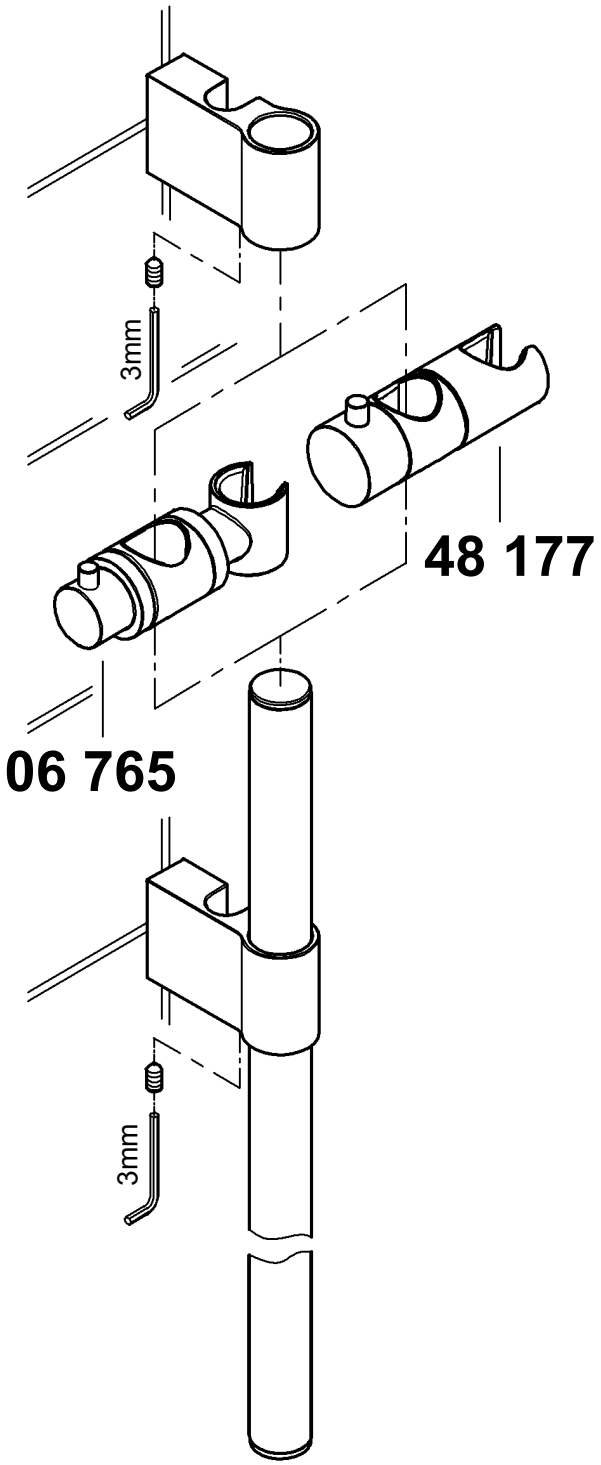

Design & Quality Engineering GROHE Germany