154097

# GIA
GEMOLOGICAL INSTITUTE OF AMERICA®

**New York** Laboratory Headquarters
580 Fifth Avenue | New York, NY 10036-4794
T: 212-221-5858 | F: 212-575-3095

**Carlsbad**
5355 Armada Drive | Carlsbad, CA 92008-4699
T: 760-603-4500 | F: 760-603-1814
www.gia.edu

COPY

July 20, 2006

Shape and Cutting Style ..... **Modified Rectangular Brilliant**
Measurements ..... **25.65 x 18.06 x 10.78 mm**

Carat Weight ..... **43.51 carat**
Color
Origin ..... **NATURAL**
Grade ..... **FANCY INTENSE YELLOW**
Distribution ..... **Even**
Clarity Grade ..... **INTERNALLY FLAWLESS**

Finish
Polish ..... Good
Symmetry ..... Good
Fluorescence ..... None
Comments:
Surface graining is not shown.
Additional extra facets are not shown.

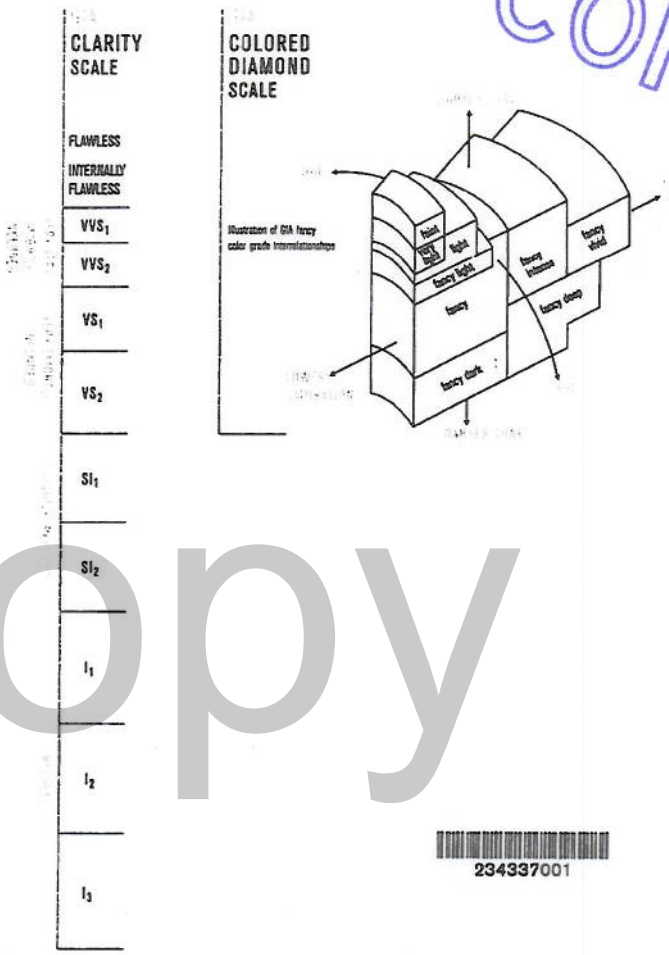


Copy

234337001

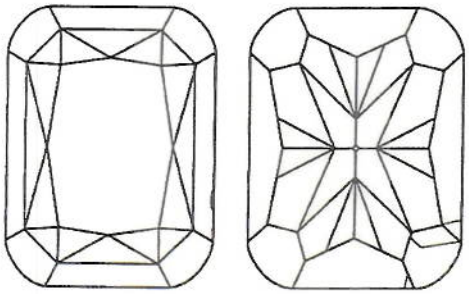

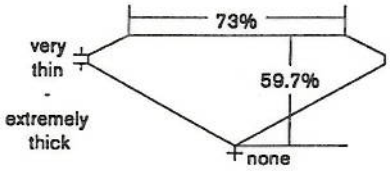


Profile not to actual proportions.

KEY TO SYMBOLS
^ Extra Facet

Red symbols denote internal characteristics (inclusions). Green or black symbols denote external characteristics (blemishes). Diagram is an approximate representation of the diamond, and symbols shown indicate type, position, and approximate size of clarity characteristics. All clarity characteristics

This Report is not a guarantee, valuation or appraisal and contains only the characteristics of the diamond described herein after it has been graded, tested, examined and analyzed by the GIA Laboratory and/or has been inscribed using the techniques and equipment used by the GIA Laboratory at the time of the examination and/or inscription. The recipient of this Report may wish to consult a credentialed jeweler or gemologist about the information contained herein.

The security features in this document, including the hologram, security screen and micropriint lines, in addition to those not listed, exceed document security industry guidelines.

**IMPORTANT LIMITATIONS ON BACK**