Model A321 V1 and A321 V3 Dehumidifier

Installation and Operating Instructions

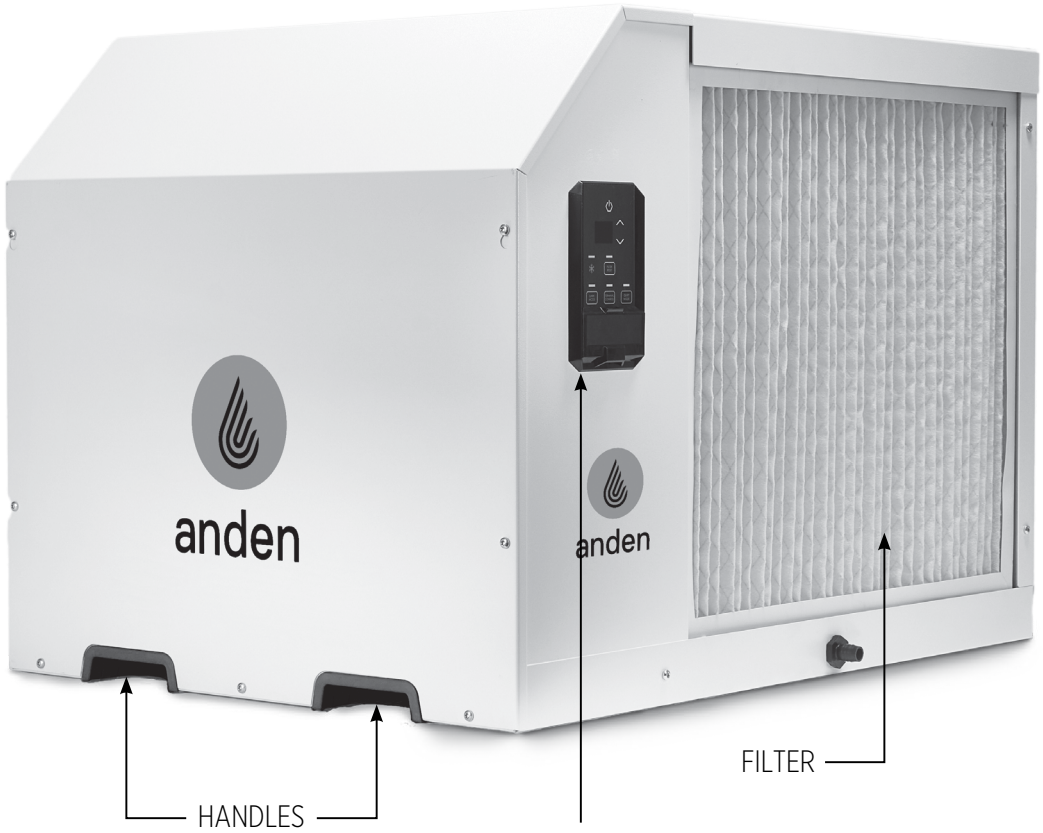

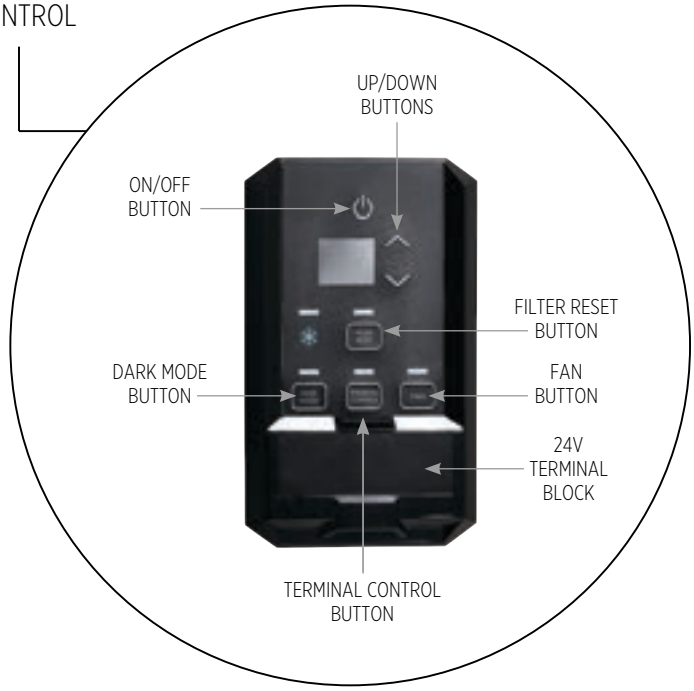

MODEL NUMBER _____

SERIAL NUMBER _____

INSTALL DATE _____

SOLD BY _____

Intertek

3 YEAR LIMITED WARRANTY*

USA Designed & Assembled in Wisconsin

READ AND SAVE THESE INSTRUCTIONS

TABLE OF CONTENTS

SAFETY PRECAUTIONS . . . 3

REGISTRATIONS . . . 4

SPECIFICATIONS . . . 4

INTENDED APPLICATIONS . . . 5

LOCATION CONSIDERATIONS . . . 5

ELECTRICAL REQUIREMENTS . . . 5

HANGING THE DEHUMIDIFIER . . . 6

CONDENSATE REMOVAL . . . 6

DUCTING . . . 7

HARD-WIRING . . . 8

CONTROL OPTIONS . . . 9
- Onboard Dehumidistat . . . 9
- External Controls . . . 10

SERVICE . . . 11
- Warning . . . 11
- Technical Description . . . 11
- Service Personnel . . . 11
- Checks to Electrical Devices . . . 12
- Repairs to Sealed Components . . . 12
- Repairs to Intrinsically Safe Components . . . 12
- Detection of Flammable Refrigerants . . . 13
- Refrigerant Removal and Evacuation . . . 13
- Charging Procedures . . . 13
- Troubleshooting . . . 14
- Refrigerant Charging . . . 15
- Impeller Fan Replacement . . . 15
- Compressor / Capacitor Replacement . . . 16
- Remote Controls . . . 17
- Defrost System . . . 17
- Condensate Pump . . . 17
- Error Codes . . . 18
- Decommissioning . . . 19
- Wiring Diagram . . . 20
- Service Parts List . . . 20
- Service Parts Diagram . . . 21

LIMITED WARRANTY . . . 22

SAFETY PRECAUTIONS

Read the installation, operation and maintenance instructions carefully before installing and operating this device. Proper adherence to these instructions is essential to obtain maximum benefit from your Anden dehumidifier.

READ AND SAVE THESE INSTRUCTIONS

- The device is designed to be installed INDOORS IN A SPACE THAT IS PROTECTED FROM RAIN AND FLOODING.
- Install the unit with space to access the back or side panels for maintenance and service. DO NOT INSTALL UNIT WITH THE SERVICE PANELS INACCESSIBLE.
- DO NOT use the device as a bench or table.
- DO NOT place the device directly on structural members. Provide vibration isolation in order to minimize operational vibration and/or noise.
- A drain pan MUST be placed under the unit if installed above a living area or above an area where water leakage could cause damage
- Never operate a unit with a damaged power cord. If the power cord is damaged it must be replaced by the manufacturer, its service agent, or similarly qualified person in order to avoid a hazard.
- Make all electrical connections in accordance with the current edition of the NEC ANSI/ NFPA 70 and any national and local codes or ordinances that may apply.
- Maintain a minimum 3ft. (1m) clearance to avoid obstructing the air return and supply.
- This appliance is not intended for use by persons (including children) with reduced physical, sensory or mental capabilities, or lack of experience and knowledge, unless they have been given supervision or instruction concerning use of the appliance by a person responsible for their safety. Children should be supervised to ensure that they do not play with the appliance.
- Not intended for use at altitudes over 6500 ft (2000M).

⚠ WARNING

Do not use means to accelerate the defrosting process or to clean, other than those recommended by the manufacturer.

The appliance shall be stored in a room without continuously operating ignition sources (for example: open flames, an operating gas appliance, or an operating electric heater.

Do not pierce or burn. Be aware that refrigerants may not contain an odor.

REFRIGERANT SAFETY GROUP A2L

REGISTRATIONS

The Anden A321 Dehumidifier units conform to unified standard UL 60335-2-40, CSA C22,2#60335-2-40. US Patents: D570,988 / 8,069,681 / 9,052,132.

SPECIFICATIONS

ELECTRICAL	A321 V1	A321 V3
Voltage	208V-240V, 1 Phase, 60 Hz	277V, 1 Phase, 60 Hz
Operating Current	240V: 8.2A @ 80°F, 60% RH 208V: 9.7A @ 80°F, 60% RH	7.2A @ 80°F, 60%
Efficiency	3.2 L/kWh @ 80°F, 60% RH 6.8 P/kWh @ 80°F, 60% RH	3.2 L/kWh @ 80°F, 60% RH 6.8 P/kWh @ 80°F, 60% RH
Power	1960 Watts	1930 Watts
MCA*	15A	15A
MOP*	25A	20A
Power Cord	14/3, SJW (6')	14/3, SJW (6')
Plug	NEMA 6-15P	NEMA L7-15P

ENVIRONMENTAL	
Operating Temperature Range	56°F – 95°F

MECHANICAL	
Weight	215 lbs (without packaging)
Drain Size	3/4" Threaded NPT
Capacity	321 PPD @ 80°F, 60% RH
Filter	MERV 13 (22" x 20" x 2")
Airflow	775 CFM @ 0.0" WG
Refrigerant	R454B, 62 oz.

* MCA = Minimum Circuit Ampacity
This number provides a qualified electrician with the information needed to determine the minimum wire size used in the circuit that feeds a single dehumidifier.

* MOP = Maximum Overcurrent Protection
This number provides a qualified electrician with the value of the maximum size circuit breaker that may be used to protect the circuit that feeds a dehumidifier.

FIGURE 1 – DIMENSIONS

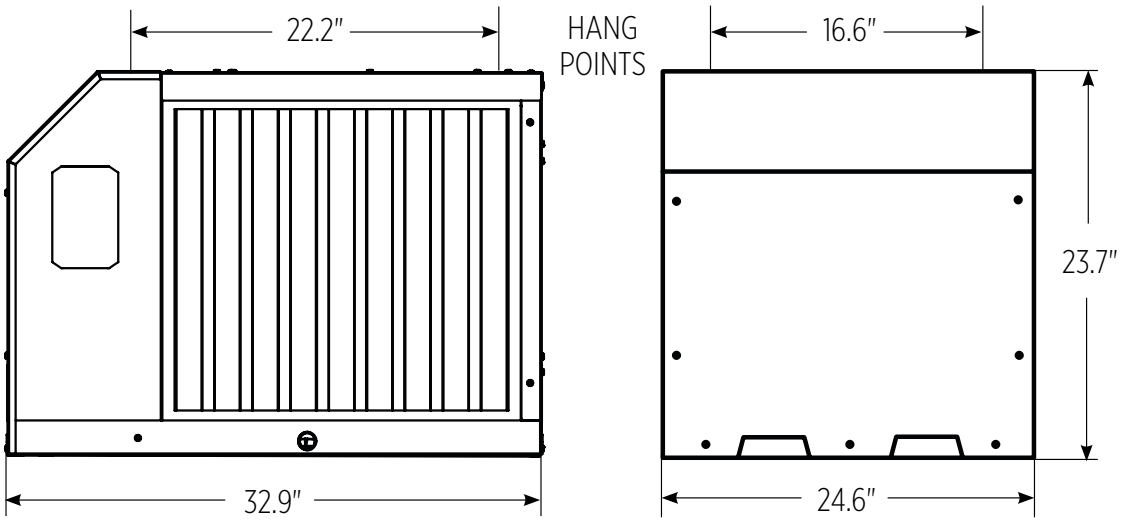

INTENDED APPLICATIONS

The Anden A321 Dehumidifier is designed to operate in temperatures between 56° and 95°F.

In order to efficiently control humidity levels, the area in which the dehumidifier is to be operated must be free of water intrusion or excessive fresh (outside) air infiltration. Before installing the Anden A321 Dehumidifier, water intrusion and air infiltration problems should be addressed or noted in calculations.

LOCATION CONSIDERATIONS

The Anden A321 dehumidifier can be installed in a variety of locations to meet the owner's needs as listed below. In all cases keep the following cautions in mind:

- Place the Anden A321 dehumidifier on supports that raise the base of the unit 6" above the secondary drain pan so a P-trap can be installed. See page 6.
- The Anden A321 dehumidifier should not hang from sides or ends. See Figure 2.
- If installing on ground, use included plugs to cover hanging locations on top of the machine.
- If hanging machine in air, use included plugs to cover holes in base pan for leveling feet.
- The minimum floor area of the room shall be 28 m2 (square meters).
- Keep any required ventilation openings clear of obstruction;
- Ducts connected to the dehumidifier shall not contain a POTENTIAL IGNITION SOURCE;
- Supply and return air shall be directly ducted to the space. Open areas such as false ceilings shall not be used as a return air duct;

Unventilated Areas

- Unventilated areas where the dehumidifier is installed or stored need to be so constructed that should any refrigerant leak, it will not stagnate so as to create a fire or explosion hazard.
- The dehumidifier shall not be stored or ducted into one or multiple rooms with continuously operating open flames (for example an operating gas appliance) or other POTENTIAL IGNITION SOURCES (for example an operating electric heater, hot surfaces). A flame-producing device may be installed in the same space if the device is provided with an effective flame arrest.

ELECTRICAL REQUIREMENTS

The Anden A321 dehumidifier plugs into NEMA rated receptacles. The amp draws for each unit under normal operating conditions are listed on page 4. A ground fault interrupter protected circuit is required.

Install the remote hygrostat in a central area of the structure where it will sense the relative humidity of the structure accurately. Do not install the hygrostat where it may not accurately sense the relative humidity such as near HVAC supply registers, near exterior doors, or near a pool or spa. The installer must supply the wiring between the dehumidifier and the hygrostat. Be sure to safely route the control wiring to prevent damage during installation. Be careful not to cross the wires when connecting the dehumidifier and the remote hygrostat.

The remote controls of the dehumidifier are powered by a low voltage circuit (24 VAC) and must NEVER contact or be connected to a high voltage circuit. The control terminals and remote control are labeled and numbered to prevent confusion. Be sure to consult the electrical schematic in this manual or inside the access panel of the dehumidifier before making the control connections.

⚠ CAUTION

Always disconnect the dehumidifier from a power source when working with the high voltage control wires.

HANGING THE DEHUMIDIFIER

FIGURE 2 – SUSPENSION

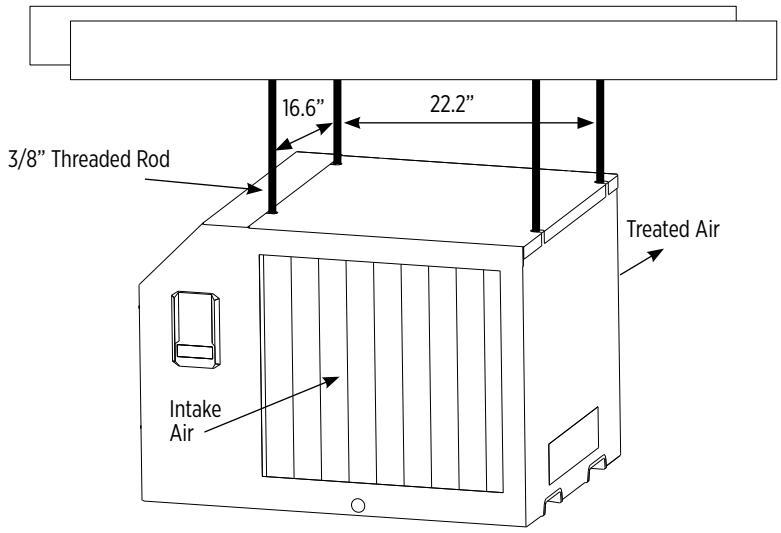

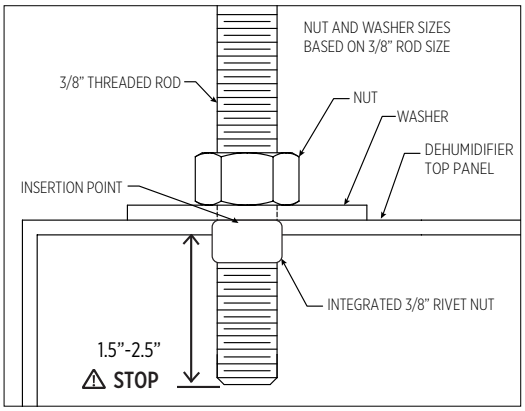

Threaded rods should be engaged no less than 1.5” and no greater than 2.5”. Damage to the machine may occur if inserted too far.

⚠ CAUTION

For proper drainage, the unit must be mounted so the drain outlet is at 6.75″ above the floor drain.

CONDENSATE WATER REMOVAL

A drain trap is recommended upon installation. Condensate drains by gravity via the drain port. Use 3/4” male NPT PVC pipe. An optional condensate pump kit may be installed if a lift is required to dispose of the condensate. See optional parts list for information on the kit.

FIGURE 3 – DRAIN TRAP CONFIGURATION

H = 4”
J = 2”
L = 6.75”

Vent:
- Place vent after the trap.
- Vent should be open.
- Height of vent should be higher than drain outlet.

Cap:
- A clean out can be placed before trap but must be sealed with a cap.

Drain Line:
- Drain line should go in a downward slope to the drain.
- 1/4” drop per foot.

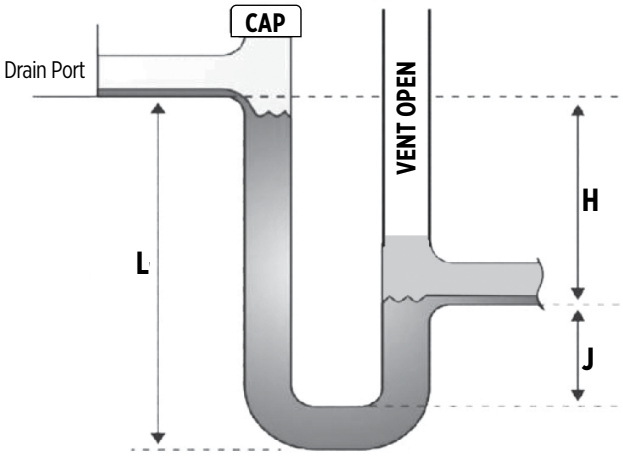

SUPPLY AND RETURN DUCT KIT

If factory duct kit accessory was purchased, follow instructions included with duct kit. **CAUTION!** Do not connect with a static pressure greater than +.25"wg. Contact technical support for additional details.

FIGURE 4 – DUCT KIT DIMENSIONS

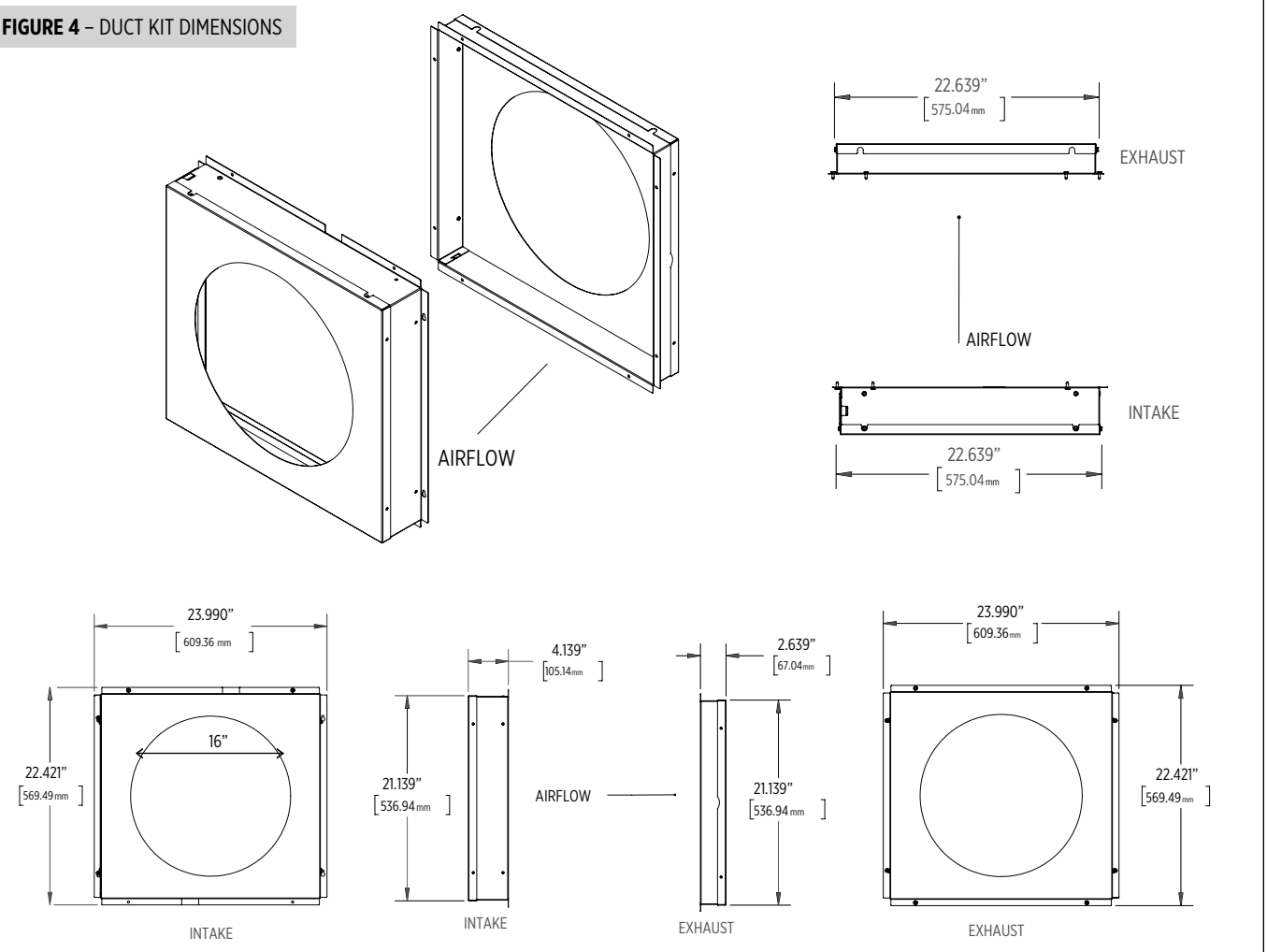

FIGURE 5 – DUCT INSTALLATION

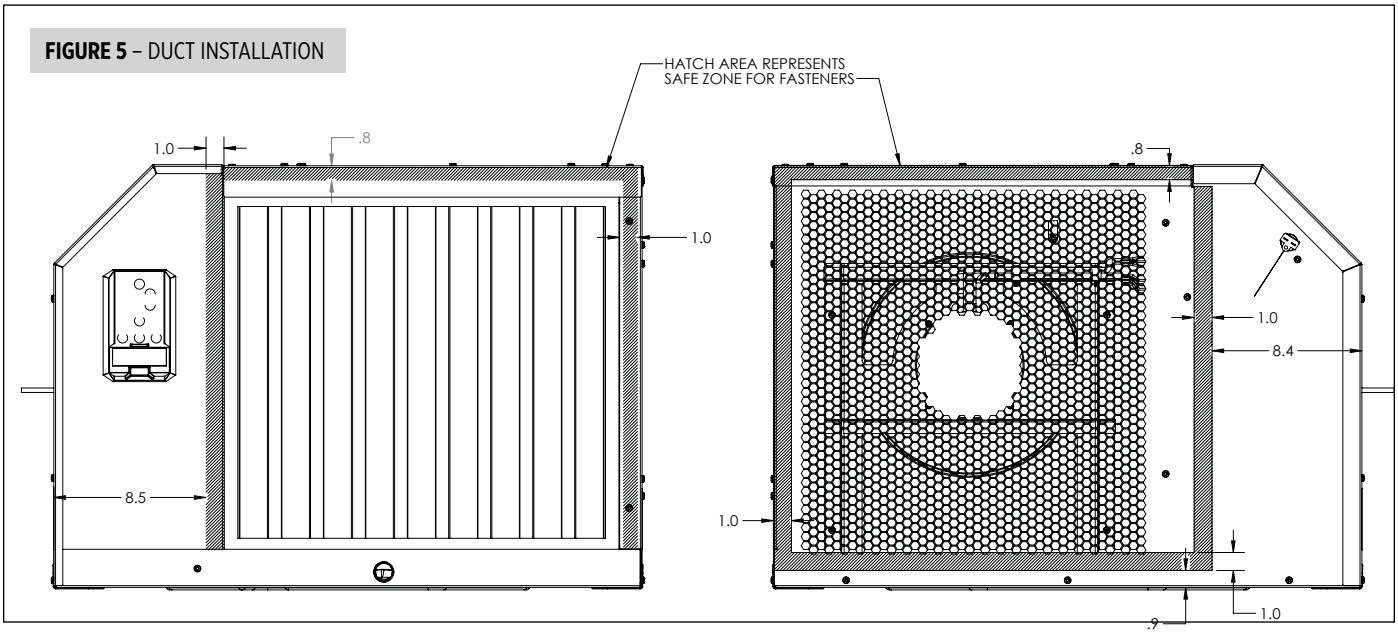

HARD-WIRING

Following all local and national electrical codes and standards, route electrical service to the location that the dehumidifier will be installed. A field-installed disconnect is required when hard-wiring this Anden dehumidifier.

⚠ WARNING

Servicing the Anden A321 dehumidifier, with its high pressure refrigerant system and high voltage circuitry presents a health hazard which could result in death, serious bodily injury, and/or property damage. Only qualified service people should service this unit.

TOOLS REQUIRED

- T25 Torx Driver
- 11/32" Driver

FIGURE 6 – STEP 1

Remove seven screws on access panel using T25 Torx driver. Remove panel.

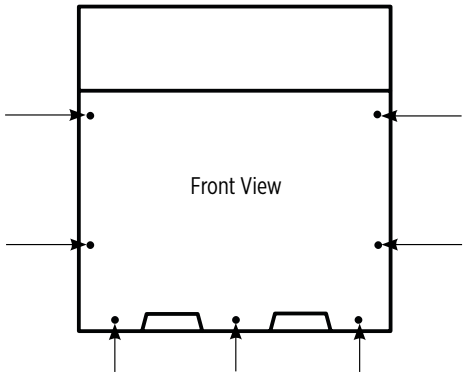

FIGURE 8 – STEP 3

Remove the 2 screws holding the cord retention bracket using T25 Torx driver and remove retention bracket. Remove power cord and black bushing. Route incoming power service wires through 7/8" hole and secure using clamps intended for the conduit or cable.

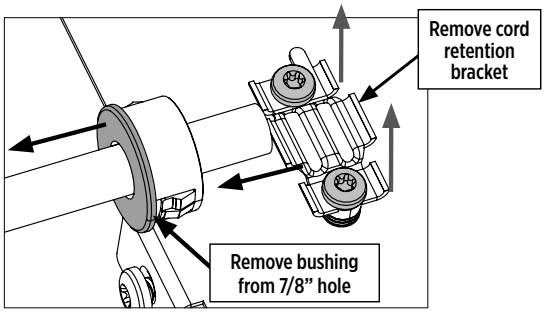

FIGURE 7 – STEP 2

Disconnect **POWER CORD BLACK** wire from terminal. Disconnect **POWER CORD WHITE** wire from terminal. Use 11/32" driver to remove nut from ground stud and disconnect **POWER CORD GREEN** wire from ground stud.

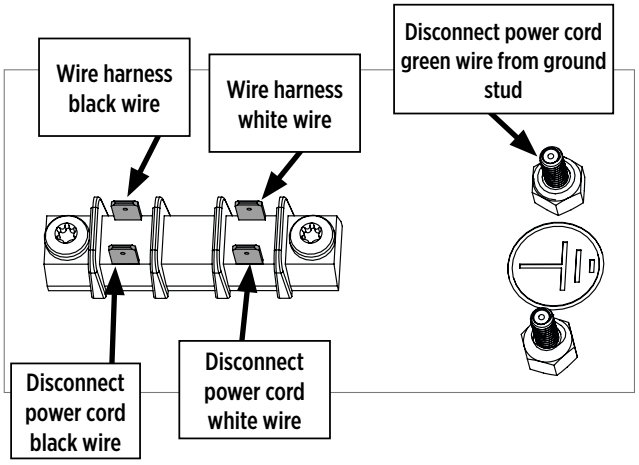

FIGURE 9 – STEP 4

Hardwire kit with jumper wires can be found in the packed parts kit.

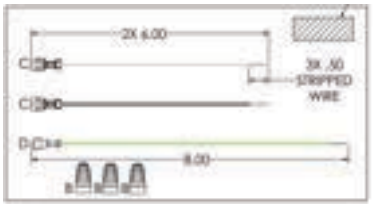

Connect **BLACK** and **WHITE** jumper wires to terminal block as shown. Place **GREEN** jumper wire ring terminal on ground stud and use 11/32" driver to secure nut to stud. Attach incoming service **LINE 1** wire to **BLACK** jumper wire with the provided wirenut. Attach incoming service **LINE 2** wire to **WHITE** jumper wire with the provided wirenut. Attach incoming service **GROUND** wire to **GREEN** jumper wire with the provided wirenut.

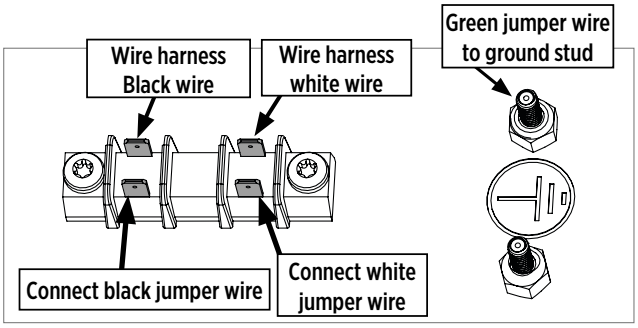

Replace access panel as seen in Figure 6.

CONTROL OPTIONS

The Anden 321 Dehumidifier can be controlled by its on board dehumidistat or with an external control using its low voltage terminal block.

ONBOARD DEHUMIDISTAT

POWER BUTTON

Off Mode: Fan, Compressor, Display and all LEDs are off
To Turn Unit On: Press the Power button.
On Mode: Display is on and shows the set point (Initial set point: 55% RH)

UP/DOWN BUTTONS

To Change Set Point:

Press the up or down arrow once, the 2-digit display will begin to blink.

Adjust to desired RH. Each push of the button will change the set point 1% RH.

After 6 seconds without a button being pushed the number showing will become the new set point.

DEFROST LIGHT

The light over the snowflake will light up when defrost is occurring (ice is detected on coils). The fan will be on, and the compressor will be off during defrost.

FIGURE 10 – ONBOARD DEHUMIDISTAT

1 Power Button
2 Display
3 Up Button
4 Down Button
5 Defrost Light
6 Filter Light
7 Filter Rest Button
8 Dark Mode Light
9 Dark Mode Button
10 Terminal Control Light
11 Terminal Control Button
12 Fan Light
13 Fan Button
14 Terminal Block

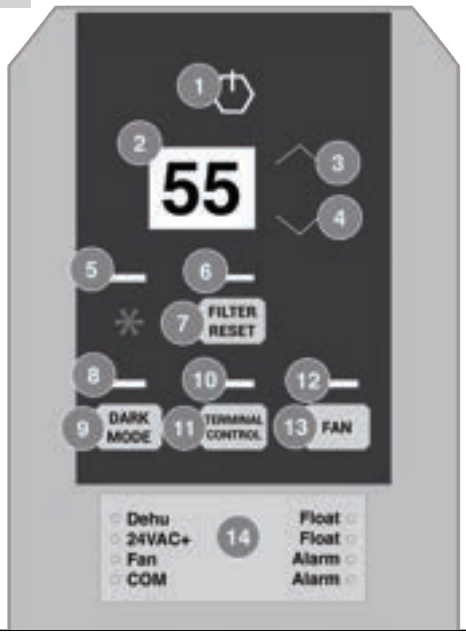

FILTER RESET BUTTON

Filter reset button will light up after the fan has been running for 2,000 hours, or if the pressure switch detects excessive pressure build-up indicating that the filter must be changed. After changing the filter, press and hold the filter reset button to reset the 2,000-hour timer. Light flashes while button is held.

DARK MODE BUTTON

This mode is for applications where the user would like the unit to operate without emitting any light. Press the Dark Mode button to activate Dark Mode.

Once Dark Mode is activated, lights will remain on for 20 seconds before the unit's hygrostat will go dark. Dark Mode light will flash for 3 seconds before unit goes dark. Unit will temporarily leave dark mode when any button is pushed and will go dark 20 seconds after the last button is pushed.

To turn off Dark Mode, press the Dark Mode button and ensure light above Dark Mode button is off.

FAN BUTTON

Pressing the Fan button alternates the unit between 2 fan options:

(On): Fan runs all the time.

(Au)to: Fan runs only when there is a call for dehumidification.

TERMINAL CONTROL BUTTON

When the Terminal Control button is pressed, the display will show "tc".

The Terminal Control button is used to activate the "DEHUM" input on the terminal block. (see section 5.1B)

This must be activated when an external control is used to control RH. When Terminal Control is active, the internal RH sensor is disabled.

EXTERNAL CONTROL

The QUEST DEH 3000R, Honeywell Humidipro, or any control that has dry contacts and a humidity set point are compatible with the Anden 321.

FIGURE 11 – EXTERNAL CONTROL WIRING DIAGRAMS

QUEST DEH 3000R Control Wiring Diagram (P/N 4028531)

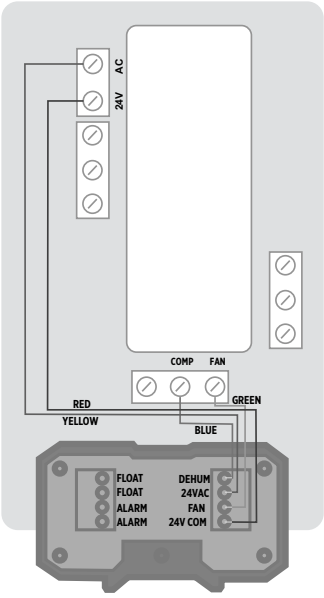

Note: 22 ga wire needed for sensor.

Honeywell Humidipro Wiring Diagram (P/N 4041649)

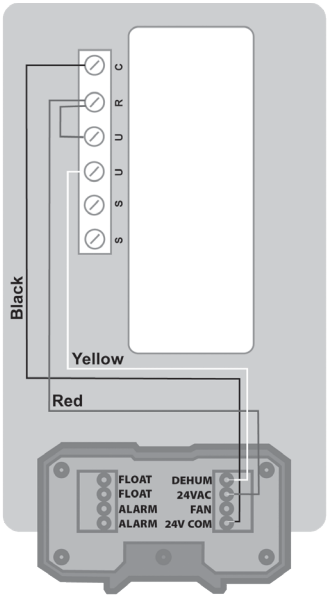

Remove the cover from the bottom of the user interface to expose the terminal block inputs & outputs.

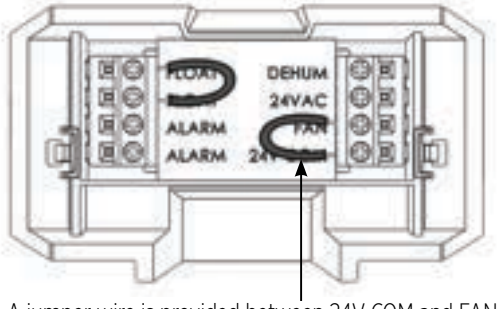

A jumper wire is provided between 24V COM and FAN. This connection does not activate the unit in any way but is a holding spot for the jumper. The jumper can be used to connect FAN and 24VAC terminals if running the fan constantly for air circulation is wanted.

FIGURE 12 – DAISY CHAIN DEH 3000R CONTROL

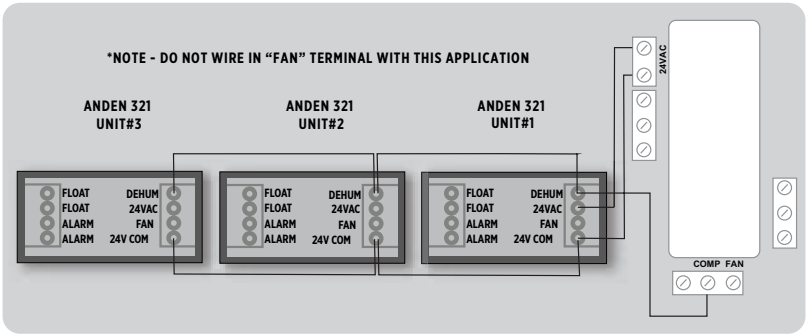

ANDEN 321 TERMINAL BLOCK CONTROL OPERATIONS:

DEHUM:	Dehumidification (Fan and Compressor) Control Input.
24VAC:	Transformer High Side Output to External Control.
Fan:	Fan Control Input.
24V COM:	24VAC Power Transformer Neutral Side Output to External Control.
FLOAT:	External Low Voltage Float Switch or Water Sensor Input (Use Normally Closed Switch).
FLOAT:	External Low Voltage Float Switch or Water Sensor Input (Use Normally Closed Switch).
Alarm:	Normally Closed Relay Output - Indicates when dehumidifier is in an alarm state.
Alarm:	Normally Closed Relay Output - Indicates when dehumidifier is in an alarm state.

NOTE: Alarm terminals are used to interface with a remote alarm or building automation system. The terminals switch when the unit has a malfunction and are factory set to "normally closed" but can be changed to "normally open".

SERVICE

⚠ WARNING

Servicing the Anden 321 with its high pressure refrigerant system and high voltage circuitry presents a health hazard which could result in death, serious bodily injury, and/or property damage. Only qualified service people should service this unit.

WARRANTY

A warranty certificate has been enclosed with this unit; read it before any repair is initiated. If a warranty repair is required, call the factory first at 1-877-420-1330 for warranty claim authorization and technical assistance.

TECHNICAL DESCRIPTION

The Anden 321 Dehumidifier uses a refrigeration system similar to an air conditioner's to remove heat and moisture from incoming air, and add heat to the air that is discharged.

Hot, high-pressure refrigerant gas is routed from the compressor to the condenser coil. The refrigerant is cooled and condensed by giving up its heat to the air that is about to be discharged from the unit. The refrigerant liquid then passes through a filter/drier and expanion device which causes the refrigerant pressure and temperature to drop. It next enters the evaporator coil where it absorbs heat from the incoming air and evaporates. The evaporator operates in a flooded condition, which means that all the evaporator tubes contain liquid refrigerant during normal operation. A flooded evaporator should maintain nearly constant pressure and temperature across the entire coil, from inlet to outlet.

The compressor collects the cool refrigerant gas and compresses it to a high pressure and temperature to repeat the process.

SERVICE PERSONNEL

Only qualified HVAC or electrical contractors are allowed to conduct maintenance, service and/or repair operations on Anden 321 machines. Examples include but are not limited to breaking into the refrigerating circuit, opening of sealed components, and/or opening of ventilated enclosures.

Prior to beginning work on the Anden 321 machine, safety checks are necessary to ensure that the risk of ignition is minimized.

For repair to the REFRIGERATING SYSTEM, a qualified contractor should first establish a controlled procedure so as to minimize the risk of a flammable gas or vapor being present while the work is being performed

All maintenance staff and others working in the local area shall be instructed on the nature of work being carried out. Work in confined spaces shall be avoided.

The area shall be checked with an appropriate refrigerant detector prior to and during work, to ensure the technician is aware of potentially toxic or flammable atmospheres. Ensure that the leak detection equipment being used is suitable for use with all applicable refrigerants, i.e. non-sparking, adequately sealed or intrinsically safe.

If any hot work is to be conducted on the refrigerating equipment or any associated parts, appropriate fire extinguishing equipment shall be available to hand. Have a dry powder or CO2 fire extinguisher adjacent to the charging area.

No person carrying out work in relation to a REFRIGERATING SYSTEM which involves exposing any pipe work shall use any sources of ignition in such a manner that it may lead to the risk of fire or explosion. All possible ignition sources, including cigarette smoking, should be kept sufficiently far away from the site of installation, repairing, removing and disposal, during which refrigerant can possibly be released to the surrounding space. Prior to work taking place, the area around the equipment is to be surveyed to make sure that there are no flammable hazards or ignition risks. "No Smoking" signs shall be displayed.

Ensure that the area is in the open or that it is adequately ventilated before breaking into the system or conducting any hot work. A degree of ventilation shall continue during the period that the work is carried out. The ventilation should safely disperse any released refrigerant and preferably expel it externally into the atmosphere.

The following checks shall be applied to installations using FLAMMABLE REFRIGERANTS:

Where electrical components are being changed, they shall be fit for the purpose and to the correct specification. At all times Therma-Stor's maintenance and service guidelines shall be followed. If in doubt, consult Therma-Stor's technical department for assistance.

The actual REFRIGERANT CHARGE is in accordance with the room size within which the refrigerant containing parts are installed;

The ventilation machinery and outlets are operating adequately and are not obstructed;

Marking to the equipment continues to be visible and legible. Markings and signs that are illegible shall be corrected;

Dehumidifiers are installed in a position where they are unlikely to be exposed to any substance which may corrode refrigerant containing components, unless the components are constructed of materials which are inherently resistant to being corroded or are suitably protected against being so corroded.

CHECK TO ELECTRICAL DEVICES

Repair and maintenance to electrical components shall include initial safety checks and component inspection procedures. If a fault exists that could compromise safety, then no electrical supply shall be connected to the circuit until it is satisfactorily dealt with. If the fault cannot be corrected immediately but it is necessary to continue operation, an adequate temporary solution shall be used. This shall be reported to the owner of the equipment so all parties are advised.

Initial safety checks shall include:

that capacitors are discharged: this shall be done in a safe manner to avoid possibility of sparking;

that no live electrical components and wiring are exposed while charging, recovering or purging the system;

that there is continuity of earth bonding;

REPAIRS TO SEALED COMPONENTS

During repairs to sealed components, all electrical supplies shall be disconnected from the equipment being worked upon prior to any removal of sealed covers, etc. If it is absolutely necessary to have an electrical supply to equipment during servicing, then a permanently operating form of leak detection shall be located at the most critical point to warn of a potentially hazardous situation.

Particular attention shall be paid to the following to ensure that by working on electrical components, the casing is not altered in such a way that the level of protection is affected. This shall include damage to cables, excessive number of connections, terminals not made to original specification, damage to seals, incorrect fitting of glands, etc.

Ensure that the equipment is mounted securely.

Ensure that seals or sealing materials have not degraded to the point that they no longer serve the purpose of preventing the ingress of flammable atmospheres.

Replacement parts shall be in accordance with Therma-Stor specifications.

REPAIRS TO INTRINSICALLY SAFE COMPONENTS

Do not apply any permanent inductive or capacitance loads to the circuit without ensuring that this will not exceed the permissible voltage and current permitted for the equipment in use.

Intrinsically safe components are the only types that can be worked on while live in the presence of a flammable atmosphere. The test apparatus shall be at the correct rating.

Replace components only with parts specified by Therma-Stor. Other parts may result in the ignition of refrigerant in the atmosphere from a leak.

NOTE: The use of silicon sealant can inhibit the effectiveness of some types of leak detection equipment. Intrinsically safe components do not have to be isolated prior to working on them.

Check that cabling will not be subject to wear, corrosion, excessive pressure, vibration, sharp edges or any other adverse environmental effects. The check shall also take into account the effects of aging or continual vibration from sources such as compressors or fans.

DETECTION OF FLAMMABLE REFRIGERANTS

Under no circumstances shall potential sources of ignition be used in the searching for or detection of refrigerant leaks. A halide torch (or any other detector using a naked flame) shall not be used.
The following leak detection methods are deemed acceptable for all refrigerant systems.

- Electronic leak detectors may be used to detect refrigerant leaks but, in the case of FLAMMABLE REFRIGERANTS, the sensitivity may not be adequate, or may need re-calibration. (Detection equipment shall be calibrated in a refrigerant-free area.) Ensure that the detector is not a potential source of ignition and is suitable for the refrigerant used. Leak detection equipment shall be set at 25% LFL of the refrigerant and shall be calibrated to 454B.
- Leak detection fluids are also suitable for use with most refrigerants but the use of detergents containing chlorine shall be avoided as the chlorine may react with the refrigerant and corrode the copper pipe.
- NOTE: Examples of leak detection fluids are:
    - bubble method
    - fluorescent method agents.
    - If a leak is suspected, all open flames shall be removed/extinguished.

If a leakage of refrigerant is found which requires brazing, all of the refrigerant shall be recovered from the system, or isolated (by means of shut off valves) in a part of the system remote from the leak. Removal of refrigerant shall be according to Clause DD.9 of 60335-2-40.

REFRIGERANT REMOVAL AND EVACUATION

When breaking into the refrigerant circuit to make repairs – or for any other purpose – conventional procedures shall be used. However, for FLAMMABLE REFRIGERANTS it is important that best practice is followed since flammability is a consideration. The following procedure shall be adhered to:

remove refrigerant;

purge the circuit with inert gas (optional for A2L);

evacuate (optional for A2L);

purge with inert gas (optional for A2L);

open the circuit by cutting or brazing.

The REFRIGERANT CHARGE shall be recovered into the correct recovery cylinders. Compressed air or oxygen shall not be used for purging refrigerant systems.

Ensure that the outlet for the vacuum pump is not close to any POTENTIAL IGNITION SOURCES and that ventilation is available.

CHARGING PROCEDURES

In addition to conventional charging procedures, the following requirements shall be followed:

- Ensure that contamination of different refrigerants does not occur when using charging equipment. Hoses or lines shall be as short as possible to minimize the amount of refrigerant contained in them.
- Cylinders shall be kept in an appropriate position according to the instructions.
- Ensure that the REFRIGERATING SYSTEM is grounded prior to charging the system with refrigerant.
- Label the system when charging is complete (if not already).
- Extreme care shall be taken not to overfill the REFRIGERATING SYSTEM.
- Prior to recharging the system, it shall be pressure-tested with the appropriate purging gas. The system shall be leak-tested on completion of charging but prior to commissioning. A follow up leak test shall be carried out prior to leaving the site.

TROUBLESHOOTING

Unit Test to determine problem:

1. Detach any exterior control wiring by removing terminal block but jump both FLOAT terminals together.
2. Reinstall terminal block into the control.
3. Plug unit in to known good power outlet with the correct voltage for the unit.
4. Power unit on by pressing power button on top of control.
5. Make sure the Terminal Control light is NOT illuminated. Press button to change.
6. Press down arrow to set the unit below 20% until “on” is displayed. This will force the unit on.
7. Listen for the fan to turn on almost immediately.
8. Wait 1 to 2 minutes for the compressor to turn on.
9. If these tests work, the problem is most likely in the control or field wiring.

Neither fan nor compressor running. Dehumidification is being called for. No fan call.

1. Unit unplugged or no power to outlet.
2. Humidity control set too high.
3. Loose connection in internal or control wiring.
4. Bad control or power board.
5. Defective control transformer.

Compressor is not running. Dehumidification is being called for. No fan call.

6. Defective compressor run capacitor.
7. Loose connection in compressor circuit.
8. High pressure switch open or unplugged.
9. Defective compressor.
10. Compressor relay defective or unplugged.
11. Temp & RH sensor reading above 120°F or below 40°F, or sensor is bad or unplugged.

Compressor cycles on and off. Dehumidification is being called for. No fan call.

1. Low ambient temperature and/or humidity causing unit to cycle through defrost mode.
2. Evaporator temp sensor bad or unplugged.
3. Defective compressor.
4. High pressure switch defective.
5. Dirty air filter(s) or air flow restricted.
6. Bad control or power board.

Fan is not running. Dehumidification or fan is being called for.

1. Loose connection in fan circuit.
2. Obstruction prevents fan impeller rotation.
3. Defective fan.
4. Bad control or power board.

Low dehumidification capacity (evaporator is frosted continuously). Dehumidification is being called for.

1. Evaporator temp sensor bad or unplugged.
2. Low refrigerant charge.
3. Dirty air filter(s) or air flow restricted.
4. Excessively restrictive ducting connected to unit.

Unit removes some water, but not as much as expected.

1. Air temperature and/or humidity have dropped.
2. Humidity meter and or thermometer used are out of calibration.
3. Unit has entered defrost cycle.
4. Air filter dirty.
5. Low refrigerant charge.
6. Air leak (eg. loose cover or ducting leaks).
7. Defective compressor.
8. Restrictive ducting.
9. Unit is in (Lo)w fan mode.
10. Evaporator temp sensor bad or unplugged.
11. Temp and RH sensor off calibration. Reading lower than actual.
12. Air pressure switch off calibration.

Filter Change Light illuminated (too frequently):

1. Change filter if dirty.
2. Hold filter change button to reset filter life hours.
3. Ducting configuration causing poor airflow. Disable filter change light by selecting a different fan speed.

REFRIGERANT CHARGING

If the refrigerant charge is lost due to service or a leak, a new charge must be accurately weighed in. If any of the old charge is left in the system, it must be recovered before weighing in the new charge. Refer to the unit nameplate for the correct charge weight and refrigerant type.

IMPELLER FAN REPLACEMENT

The motorized impeller fan is a unitary assembly consisting of the motor and impeller fan. If defective, the complete assembly must be replaced.

1. Unplug the power cord.
2. Remove the access panel, and top panel.
3. Remove the screws attaching the impeller fan support bracket to the base.
4. Disconnect the impeller fan leads inside the electrical box by pinching the outer tabs and pulling.
5. Remove fan/bracket assembly by removing 4 screws attaching the bracket to the fan shroud.
6. Remove the defective impeller fan from the bracket and replace with it with the new impeller fan.
7. Reassemble the new impeller fan by reversing the above procedure.

COMPRESSOR / CAPACITOR REPLACEMENT

This compressor is equipped with a run capacitor, but no start capacitor or start relay.

Checking Compressor Motor Circuits:

Perform the following tests if the impeller fan runs but the compressor does not with a call for dehumidification.

1. Remove the cabinet side to gain access to the electrical components.
2. Plug in the unit and turn the humidity control to ON. Check for volts from compressor black wires on compressor relay to white wire on compressor capacitor using an AC voltmeter. If correct voltage is present, go to next step.
3. Using capacitor or MFD setting on meter test between both capacitor terminals. Compare reading to capacitor spec on capacitor.
4. If the above test pass but the compressor does not work, the compressor has an internal mechanical defect and must be replaced.

Replacing a Burnt Compressor

The refrigerant and oil mixture in a compressor is chemically very stable under normal operating conditions. However, when an electrical short occurs in the compressor motor, the resulting high temperature arc causes a portion of the refrigerant oil mixture to break down into carbonaceous sludge, a very corrosive acid, and water. These contaminants must be carefully removed otherwise even small residues will attack replacement compressor motors and cause failures.

The following procedure is effective only if the system is monitored after replacing the compressor to insure that the clean up was complete.

1. This procedure assumes that the previously listed compressor motor circuit tests revealed a shorted or open winding.
2. Remove and properly dispose of the system charge. DO NOT vent the refrigerant or allow it to contact your eyes or skin.
3. Remove the burned out compressor. Use rubber gloves if there is any possibility of contacting the oil or sludge.
4. To facilitate subsequent steps, determine the type of burn out that occurred. If the discharge line shows no evidence of sludge and the suction line is also clean or perhaps has some light carbon deposits, the burn out occurred while the compressor was not rotating. Contaminants are therefore largely confined to the compressor housing. A single installation of liquid and suction line filter/driers will probably clean up the system.

   If sludge is evident in the discharge line, it will likely be found in the suction line. This indicates the compressor burned out while running. Sludge and acid have been pumped throughout the system. Several changes of the liquid and suction filter/driers will probably be necessary to cleanse the system.
5. Correct the system fault that caused the burn out. Consult the factory for advice.
6. Install the replacement compressor with a new capacitor and an oversized liquid line filter.

   In a running burn out, install an oversized suction line filter/drier between the accumulator and compressor. Thoroughly flush the accumulator with refrigerant to remove all trapped sludge and to prevent the oil hole from becoming plugged. A standing burn out does not require a suction line filter/drier.
7. Evacuate the system with a good vacuum pump and accurate vacuum gauge. Leave the pump on the system for at least an hour.
8. Operate the system for a short period of time, monitoring the suction pressure to determine that the suction filter is not becoming plugged. Replace the suction filter/drier if pressure drop occurs. If a severe running burn out has occurred, several filter/driers may have to be replaced to remove all of the acid and moisture.

NOTE: NEVER USE THE COMPRESSOR TO EVACUATE THE SYSTEM OR ANY PART OF IT.

Replacing a Compressor, Non Burn Out

Remove the refrigerant from the system. Replace the compressor and liquid line filter/drier. Charge the system to 50 PSIG and check for leaks. Remove the charge, evacuate the system, and weigh in the refrigerant quantity listed on the nameplate. Operate the system to verify performance.

REMOTE CONTROLS

The Anden 321 dehumidifier is controlled by devices mounted on a panel that is remote from the unit. You may or may not have the devices listed below depending on the model of the remote hygrostat you purchased. If the Anden 321 dehumidifier fails to operate as desired, always check the settings of the controls to ensure that they are correct. Check that the controls are receiving 24VAC from the Anden 321 dehumidifier. Check the connections between the Anden 321 dehumidifier, the hygrostat, and the field control wiring.

Humidity Control

The humidity control is an adjustable switch that closes when the relative humidity of the air in which it is located rises to the set point. It opens when the RH drops 4 to 6% below the set point. If the Anden 321 dehumidifier does not run, try turning the humidity control Down using arrow on control pad. If it then runs, the humidity control is out of calibration or the RH is below setpoint.

DEFROST SYSTEM

The Anden 321 dehumidifier is equipped with an automatic defrost mechanism. If the Anden 321 dehumidifier operates in conditions that develop frost on the evaporator, it will sense the frost build-up and automatically defrost the evaporator. The Anden 321 dehumidifier may not appear to be operating correctly during the defrost sequence, but once the defrost sequence is completed, the Anden 321 dehumidifier will resume dehumidifying.

The evaporator temperature sensor is installed into the center of the evaporator coil. It will automatically shut the compressor off if the temperature drops due to excessive frost formation on the evaporator coil. The impeller fan will continue to run, causing air to flow through the evaporator coil and melt the ice. When the ice has melted, the evaporator temperature will rise, and the control will restart the compressor.

CONDENSATE PUMP KIT

An optional condensate pump kit is available from the factory for use with the Anden 321 dehumidifier. Condensate is automatically pumped to a remote location when the water level in the pump's reservoir rises to close the float switch.

The pump also contains a safety float switch. The white leads from this switch extend from beneath the pump cover. These leads should be extended to the FLOAT terminals on the terminal block and the factory float jumper removed. If the pump fails, the safety switch opens causing the compressor to stop and water production to cease before the reservoir overflows. E4 will be displayed on the control panel. The Anden 321 Dehumidifier will not dehumidify until this switch closes.

A warranty certificate has been enclosed with this unit; read it before any repair is initiated. If a warranty repair is required, call the factory first at 1-877-420-1330 for warranty claim authorization and technical assistance.

TABLE 1 – ERROR CODES

Machine Display	Name	Possible Causes	Troubleshooting	Service Needed
Error code "E1"	RH SENSOR ERROR	1. Broken sensor 2. Unplugged sensor	1. Dehumidifier fan will circulate air for 1 minute. 2. Dehumidifier compressor will activate for 15 minutes. 3. This process will repeat every 15 minutes.	No Displays E1, but keeps running.
Error code "E2"	LOW DEWPOINT; 24V SHORT	1. Dewpoint below 40°F 2. Off calibration Humidity/ Temp sensor	1. Dehumidifier will circulate air for 50 seconds every 15 minutes. 2. Dehumidifier will not operate until incoming air dew point reads above 40°F	No
Error code "E3"	LOW REFRIGERANT	1. Refrigeration leak 2. Evaporator coil temp too high during extended operation	1. Dehumidifier will go into lock-out mode for 1 hour and then attempt to activate compressor.	Yes
Error code "E4"	FLOAT SWITCH TRIPPED	1. Tripped float switch 2. 24V is shorted to Common 3. Terminal block unplugged from unit	1. The compressor and fan in the dehumidifier will remain off until the connection is fixed or the water event that activated the switch is resolved.	Yes
Error code "E5"	COIL TEMPERATURE SENSOR	1. Broken sensor 2. Loose connection	1. Dehumidifier will go into lock-out mode for 1 hour and then activate compressor for 15 minutes 2. After the compressor runs for 15 minutes, the unit will go into defrost mode for 30 minutes.	No
Error code "E6"	TEMPERATURE TOO HIGH	1. Sensor reading incoming air temp is over 120°F 2. Broken sensor	1. Dehumidifier will circulate air for 15 minutes every hour. 2. Dehumidifier will not operate until incoming air temp sensor reads below 120°F	No
Error code "E7"	TEMPERATURE TOO LOW	1. Sensor reading incoming air temp is under 40°F 2. Broken sensor	1. Dehumidifier will circulate air for 50 seconds every 15 minutes. 2. Dehumidifier will not operate until incoming air temp reads above 40°F.	No
Error code "E8"	COMM ERROR	1. There is a cable connection issue 2. Defective power board	1. The power board will continue to run unit using the last settings but changes to operation cannot be made until communication is restored.	Yes, if operational changes are required.
Error code "E9"	HIGH PRESSURE CUT-OUT	1. High pressure sensor has tripped due to excess pressure in the refrigeration system 2. Incoming air temp is too high	1. Power board will be in system protection mode.	Yes, if the error persists when operating below 90°F incoming air

DECOMMISSIONING

Before carrying out this procedure, it is essential that the technician is completely familiar with the equipment and all its details. It is recommended good practice that all refrigerants are recovered safely. Prior to the task being carried out, an oil and refrigerant sample shall be taken in case analysis is required prior to re-use of recovered refrigerant. It is essential that electrical power is available before the task commences.

1. Become familiar with the equipment and its operation.
2. Isolate system electrically.
3. Before attempting the procedure, ensure that:
   - mechanical handling equipment is available, if required, for handling refrigerant cylinders;
   - all personal protective equipment is available and being used correctly;
   - the recovery process is supervised at all times by a competent person;
   - recovery equipment and cylinders conform to the appropriate standards.
4. Pump down refrigerant system, if possible.
5. If a vacuum is not possible, make a manifold so that refrigerant can be removed from various parts of the system.
6. Make sure that cylinder is situated on the scales before recovery takes place.
7. Start the recovery machine and operate in accordance with instructions.
8. Do not overfill cylinders (no more than 80 % volume liquid charge).
9. Do not exceed the maximum working pressure of the cylinder, even temporarily.
10. When the cylinders have been filled correctly and the process completed, make sure that the cylinders and the equipment are removed from site promptly and all isolation valves on the equipment are closed off.
11. Recovered refrigerant shall not be charged into another REFRIGERATING SYSTEM unless it has been cleaned and checked.

Labelling Decommission Machines

Equipment shall be labelled stating that it has been de-commissioned and emptied of refrigerant. The label shall be dated and signed. For appliances containing FLAMMABLE REFRIGERANTS, ensure that there are labels on the equipment stating the equipment contains FLAMMABLE REFRIGERANT.

Refrigerant Recovery

When removing refrigerant from a system, either for servicing or decommissioning, it is recommended good practice that all refrigerants are removed safely.

When transferring refrigerant into cylinders, ensure that only appropriate refrigerant recovery cylinders are employed. Ensure that the correct number of cylinders for holding the total system charge is available. All cylinders to be used are designated for the recovered refrigerant and labelled for that refrigerant (i.e. special cylinders for the recovery of refrigerant). Cylinders shall be complete with pressure-relief valve and associated shut-off valves in good working order. Empty recovery cylinders are evacuated and, if possible, cooled before recovery occurs.

The recovery equipment shall be in good working order with a set of instructions concerning the equipment that is at hand and shall be suitable for the recovery of all appropriate refrigerants including, when applicable, FLAMMABLE REFRIGERANTS. In addition, a set of calibrated weighing scales shall be available and in good working order. Hoses shall be complete with leak-free disconnect couplings and in good condition. Before using the recovery machine, check that it is in satisfactory working order, has been properly maintained and that any associated electrical components are sealed to prevent ignition in the event of a refrigerant release. Consult manufacturer if in doubt.

The recovered refrigerant shall be returned to the refrigerant supplier in the correct recovery cylinder, and the relevant waste transfer note arranged. Do not mix refrigerants in recovery units and especially not in cylinders.

If compressors or compressor oils are to be removed, ensure that they have been evacuated to an acceptable level to make certain that FLAMMABLE REFRIGERANT does not remain within the lubricant. The evacuation process shall be carried out prior to returning the compressor to the suppliers. Only electric heating to the compressor body shall be employed to accelerate this process. When oil is drained from a system, it shall be carried out safely.

WIRING DIAGRAM

FIGURE 13 –WIRING DIAGRAM

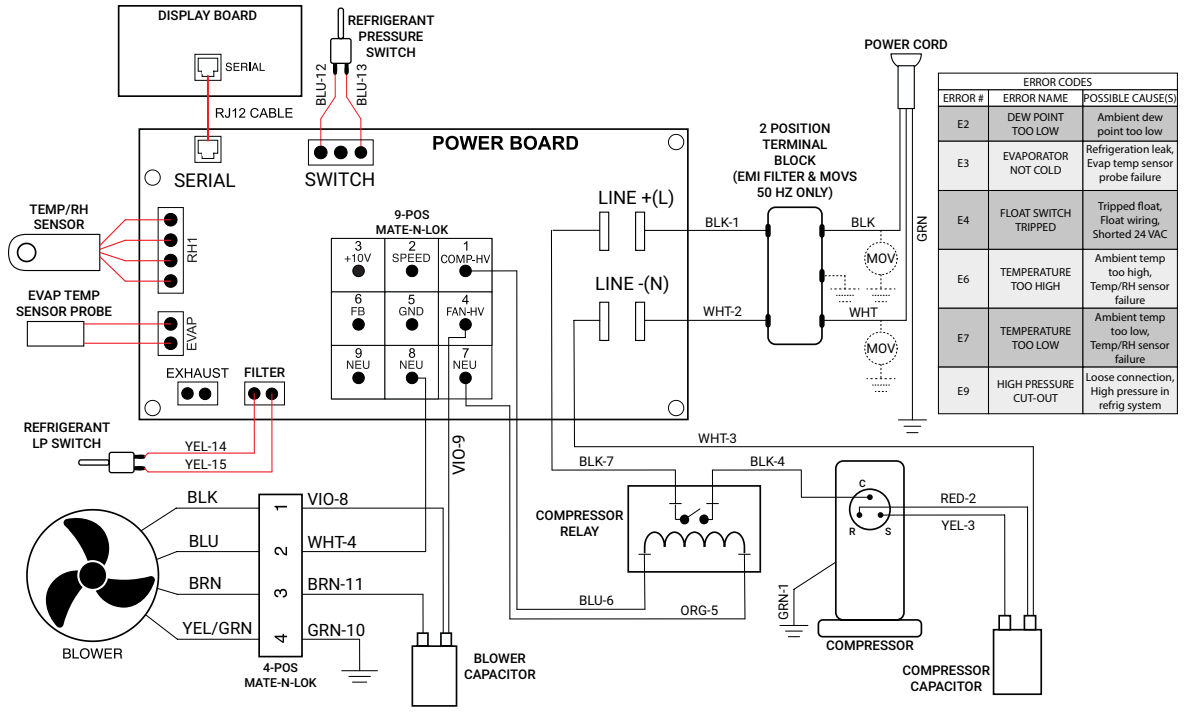

ERROR CODES		
ERROR #	ERROR NAME	POSSIBLE CAUSE(S)
E2	DEW POINT TOO LOW	Ambient dew point too low
E3	EVAPORATOR NOT COLD	Refrigeration leak, Evap temp sensor probe failure
E4	FLOAT SWITCH TRIPPED	Tripped float, Float wiring, Shorted 24 VAC
E6	TEMPERATURE TOO HIGH	Ambient temp too high, Temp/RH sensor failure
E7	TEMPERATURE TOO LOW	Ambient temp too low, Temp/RH sensor failure
E9	HIGH PRESSURE CUT-OUT	Loose connection, High pressure in refrig system

SERVICE PARTS LIST

No.	Part Description	Part No.
1	UI Control Board	4041909
2	Cover, UI, 24VAC	4042009
3	Sensor, Temp & RH, Digital	4042061
4	Filter (Not Shown)	4042545-01
5	Coil Assembly	4045241
6	Switch, Low Pressure, 85PSI	4045338
7	Filter, Drier	4042468
8	Control, High Pressure	4043292
9	Compressor (208-230V)	4045231
	Compressor (277v)	4045232
10	Handle, Pocket	4042528-01
11	Clip, Cord Retention	4041892
12	Control Board	4042291
	Control Board (277v)	4042824
13	Relay	4042467
	Relay (277v)	4042818

No.	Part Description	Part No.
14	Block, Wiring	4042505
15	Clamp, Capacitor, 1.75 Dia, P Shape (Not Shown)	4031519
16	230V imp cap - 7uf cap	4044900-01
	277V imp cap - 5uf cap	4044099-04
17	Clamp, Capacitor, Comp	4022160
18	Capacitor, Comp (208-230V)	4035949-05
	Capacitor, Comp (277V)	4035949-04
19	Fan, Motorized Impeller (208-230V)	4045233
	Fan, Motorized Impeller (277v)	4045234
20	Cord	4036494
	Cord (277v)	4042817
21	Probe, Thermistor, SS, FORMD, 9.00	4034716-19
Optional Accessories		
Pump Kit (110-120V)		4022220
335 Duct Kit		4042685
DEH 3000R Control, Remote		4028531

SERVICE PARTS DIAGRAM

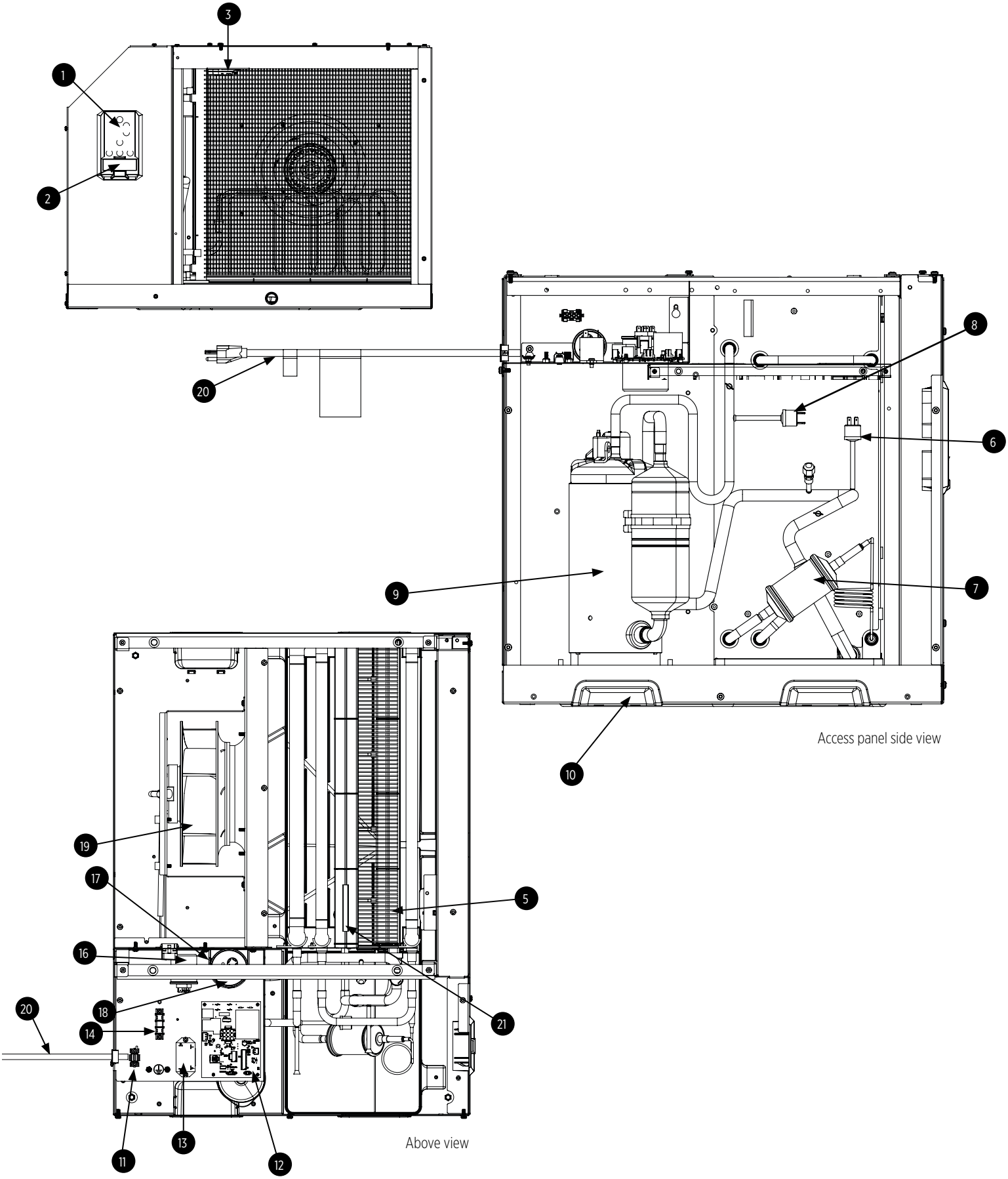

LIMITED WARRANTY

WARRANTOR:
Therma-Stor LLC
4201 Lien Rd
Madison, WI 53704
1-877-420-1330

WHO IS COVERED: This warranty extends only to the original end-user of the Anden 321 Dehumidifier, and may not be assigned or transferred.

FIRST YEAR WARRANTY: Therma-Stor LLC warrants that, for one (1) year the Anden 321 Dehumidifier will operate free from any defects in materials and workmanship, or Therma-Stor LLC will, at its option, repair or replace the defective part(s), free of any charge.

SECOND THROUGH THIRD YEAR WARRANTY: Therma-Stor LLC further warrants that for a period of three (3) years, the condenser, evaporator, and compressor of the Anden 321 Dehumidifier will operate free of any defects in material or workmanship, or Therma-Stor LLC, at its option, will repair or replace the defective part(s), provided that all labor and transportation charges for the part(s) shall be borne by the end-user.

END-USER RESPONSIBILITIES: Warranty service must be performed by a Servicer authorized by Therma-Stor LLC. If the end-user is unable to locate or obtain warranty service from an authorized Servicer, he should call Therma-Stor LLC at the above number and ask for the Therma-Stor LLC Service Department, which will then arrange for covered warranty service. Warranty service will be performed during normal working hours.

The End-user must present proof of purchase (lease) upon request, by use of the warranty card or other reasonable and reliable means. The end-user is responsible for normal care. This warranty does not cover any defect, malfunction, etc. resulting from misuse, abuse, lack of normal care, corrosion, freezing,
tampering, modification, unauthorized or improper repair or installation, accident, acts of nature or any
other cause beyond Therma-Stor LLC's reasonable control.

LIMITATIONS AND EXCLUSIONS: If any Anden 321 Dehumidifier part is repaired or replaced, the new part shall be warranted for only the remainder of the original warranty period applicable thereto (but all warranty periods will be extended by the period of time, if any, that the Anden 321 Dehumidifier is out of service while awaiting covered warranty service).

UPON THE EXPIRATION OF THE WRITTEN WARRANTY APPLICABLE TO THE ANDEN DEHUMIDIFIER OR ANY PART THEREOF, ALL OTHER WARRANTIES IMPLIED BY LAW, INCLUDING MERCHANTABILITY AND FITNESS FOR A PARTICULAR PURPOSE, SHALL ALSO EXPIRE. ALL WARRANTIES MADE BY THERMA-STOR LLC ARE SET FORTH HEREIN, AND NO CLAIM MAY BE MADE AGAINST THERMA-STOR LLC BASED ON ANY ORAL WARRANTY. IN NO EVENT SHALL THERMA-STOR LLC, IN CONNECTION WITH THE SALE, INSTALLATION, USE, REPAIR OR REPLACEMENT OF ANY ANDEN DEHUMIDIFIER OR PART THEREOF BE LIABLE UNDER ANY LEGAL THEORY FOR ANY SPECIAL, INDIRECT OR CONSEQUENTIAL DAMAGES INCLUDING WITHOUT LIMITATION WATER DAMAGE (THE END-USER SHOULD TAKE PRECAUTIONS AGAINST SAME), LOST PROFITS, DELAY, OR LOSS OF USE OR DAMAGE TO ANY REAL OR PERSONAL PROPERTY.
Some states do not allow limitations on how long an implied warranty lasts, and some do not allow the exclusion or limitation of incidental or consequential damages, so one or both of these limitation may not apply to you.

LEGAL RIGHTS: This warranty gives you specific legal rights, and you may also have other rights which vary from state to state.

REGISTER YOUR NEW DEHUMIDIFIER
using the serial number and part number at
www.thermastor.com/registration
or scan code.

 ©2026 Anden.

For internal use only.