These details are provided for informational purposes only and should be used in conjunction with the installation instructions available at www.ceraclad.com. Project-specific conditions and details fall under the responsibility of the design professional.

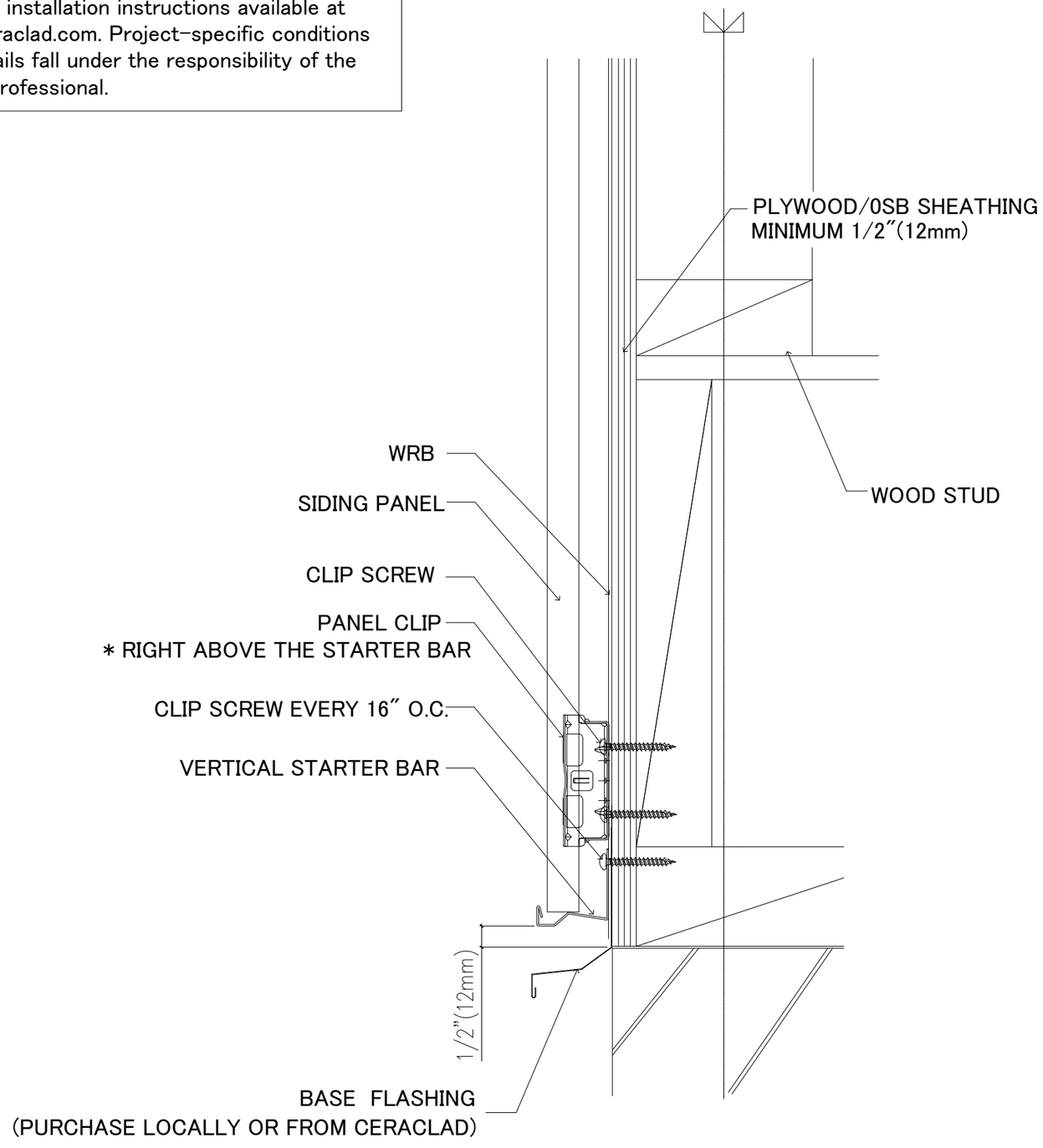

1 STARTER BAR (Wood/Vertical)

These details are provided for informational purposes only and should be used in conjunction with the installation instructions available at www.ceraclad.com. Project-specific conditions and details fall under the responsibility of the design professional.

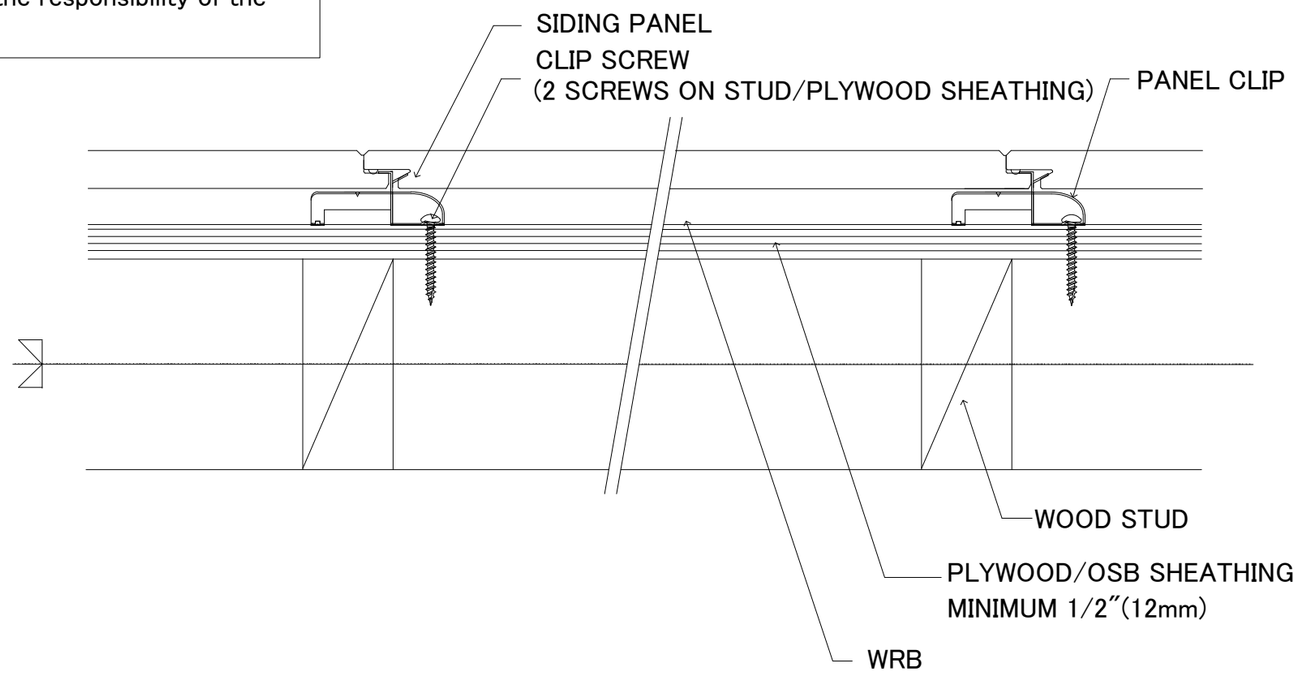

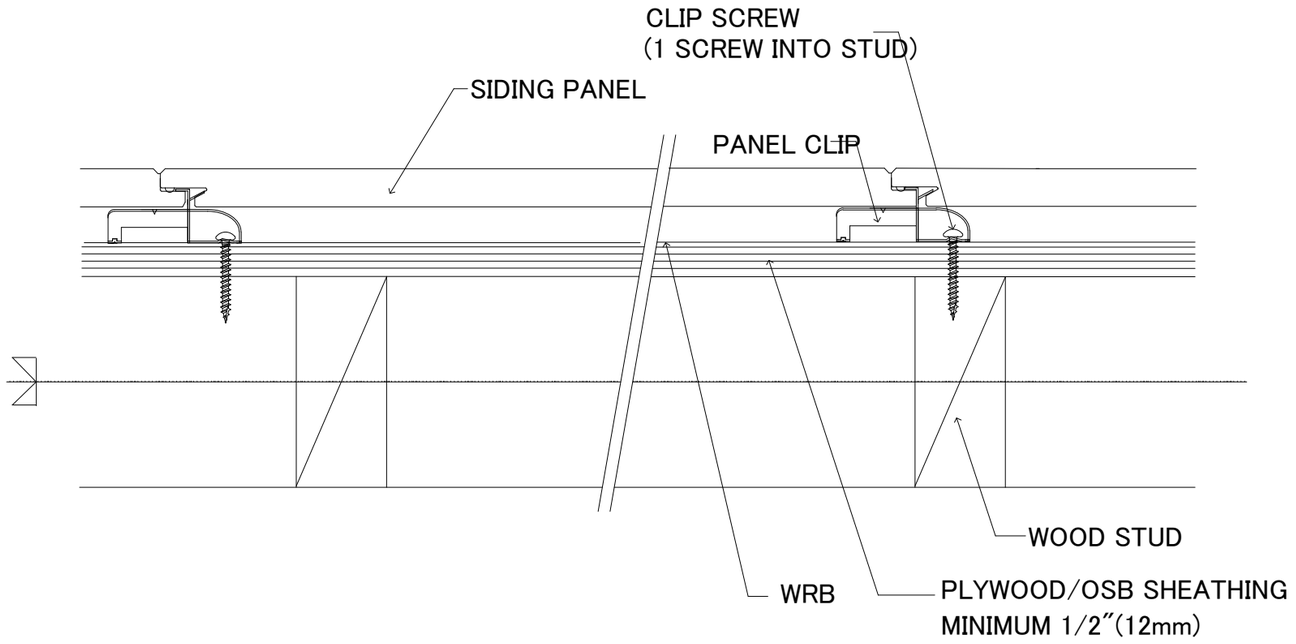

2 HORIZONTAL SECTION (Wood/Vertical)

These details are provided for informational purposes only and should be used in conjunction with the installation instructions available at www.ceraclad.com. Project-specific conditions and details fall under the responsibility of the design professional.

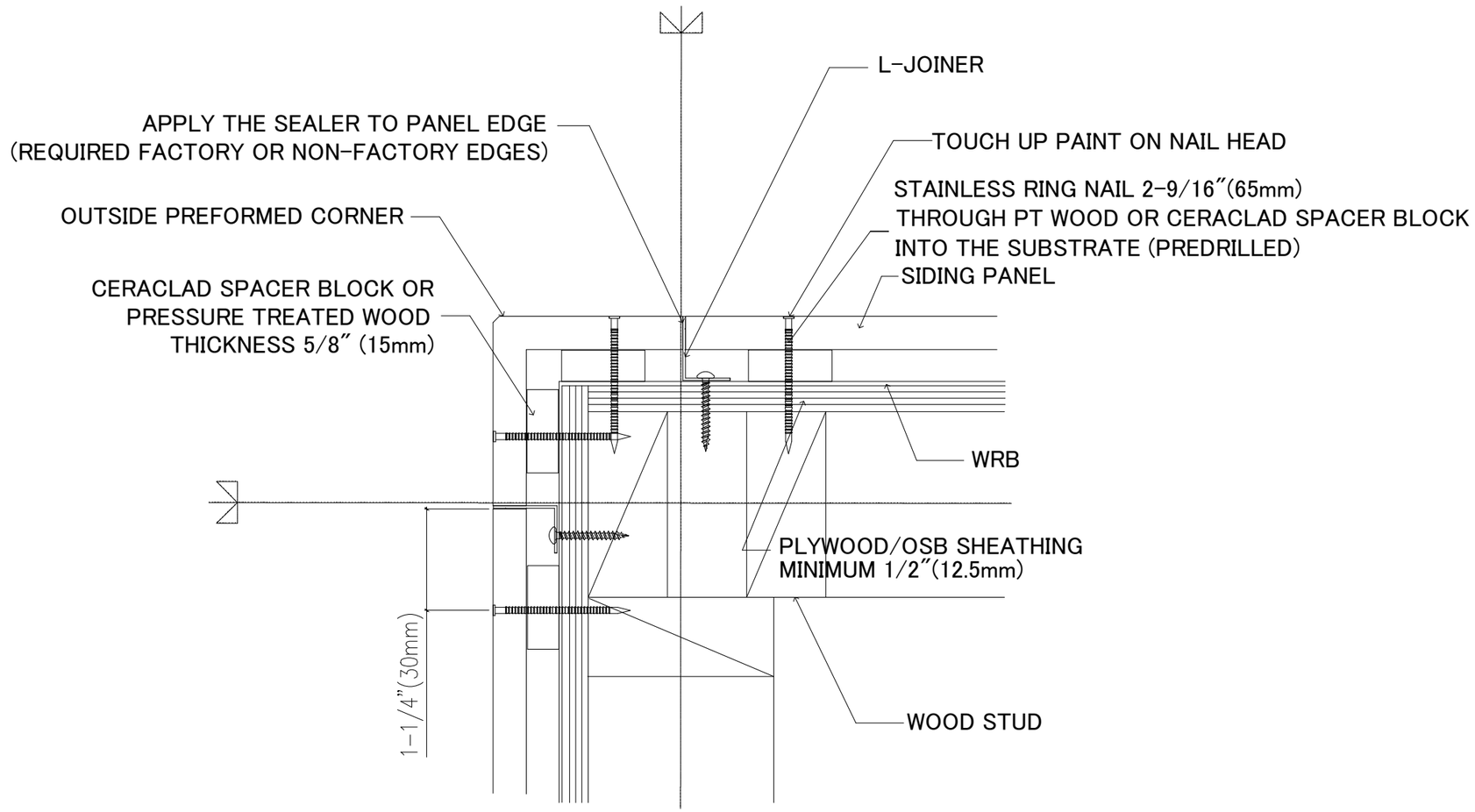

3 OUTSIDE PREFORMED CORNER (Wood/Vertical)

These details are provided for informational purposes only and should be used in conjunction with the installation instructions available at www.ceraclad.com. Project-specific conditions and details fall under the responsibility of the design professional.

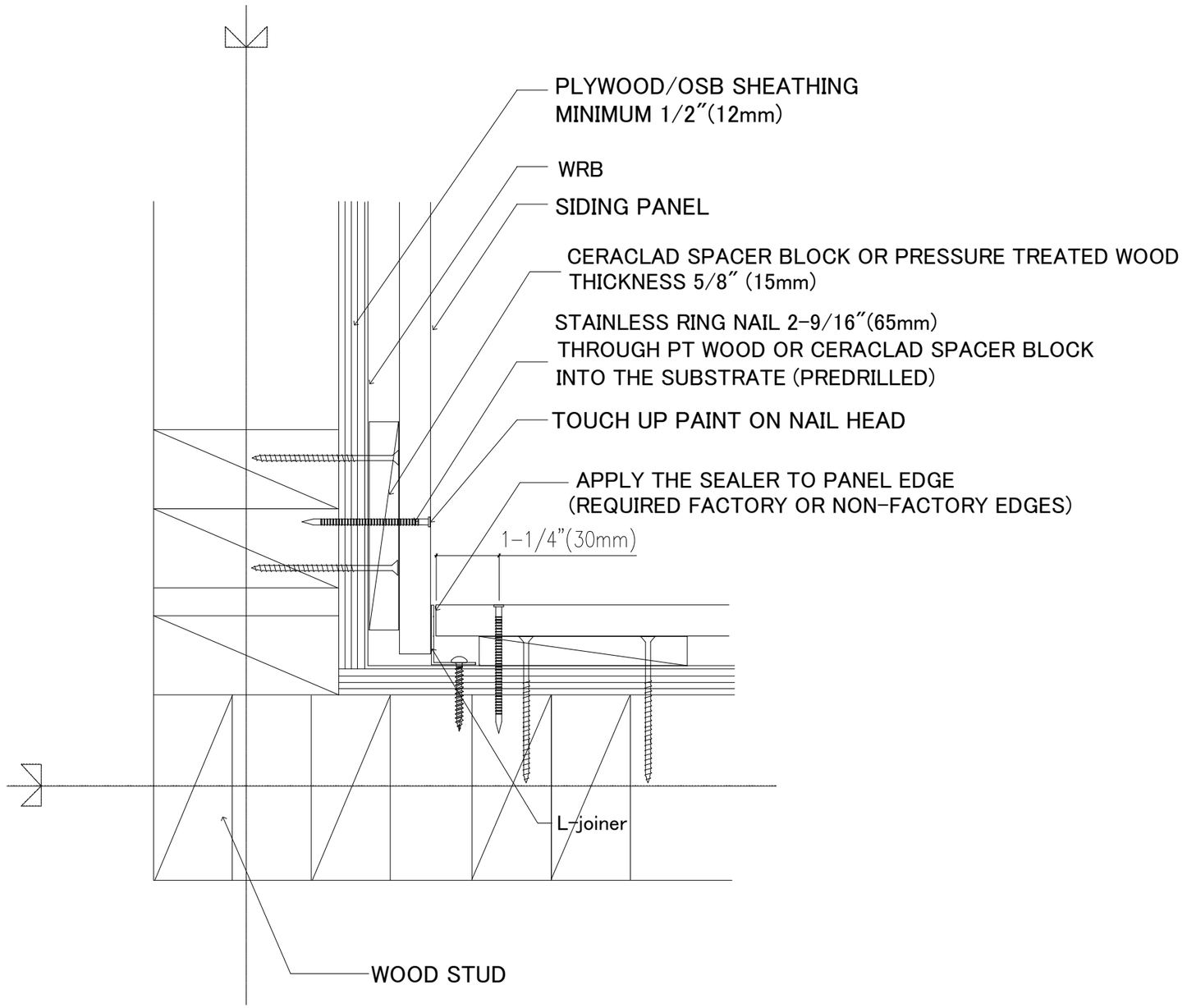

4 INSIDE CORNER (Wood/Vertical)

These details are provided for informational purposes only and should be used in conjunction with the installation instructions available at www.ceraclad.com. Project-specific conditions and details fall under the responsibility of the design professional.

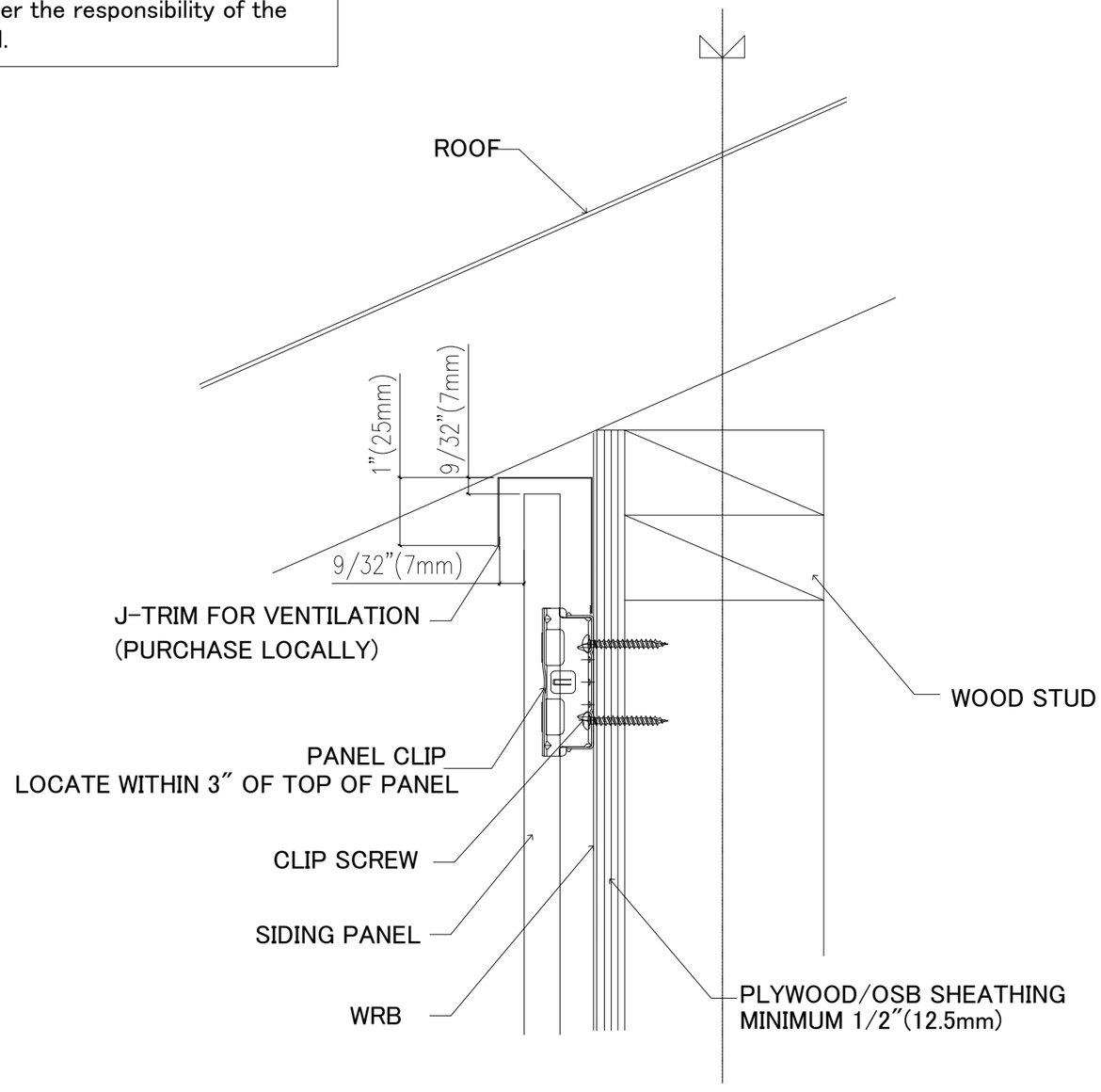

5 UNDER EAVES (Wood/Vertical)

These details are provided for informational purposes only and should be used in conjunction with the installation instructions available at www.ceraclad.com. Project-specific conditions and details fall under the responsibility of the design professional.

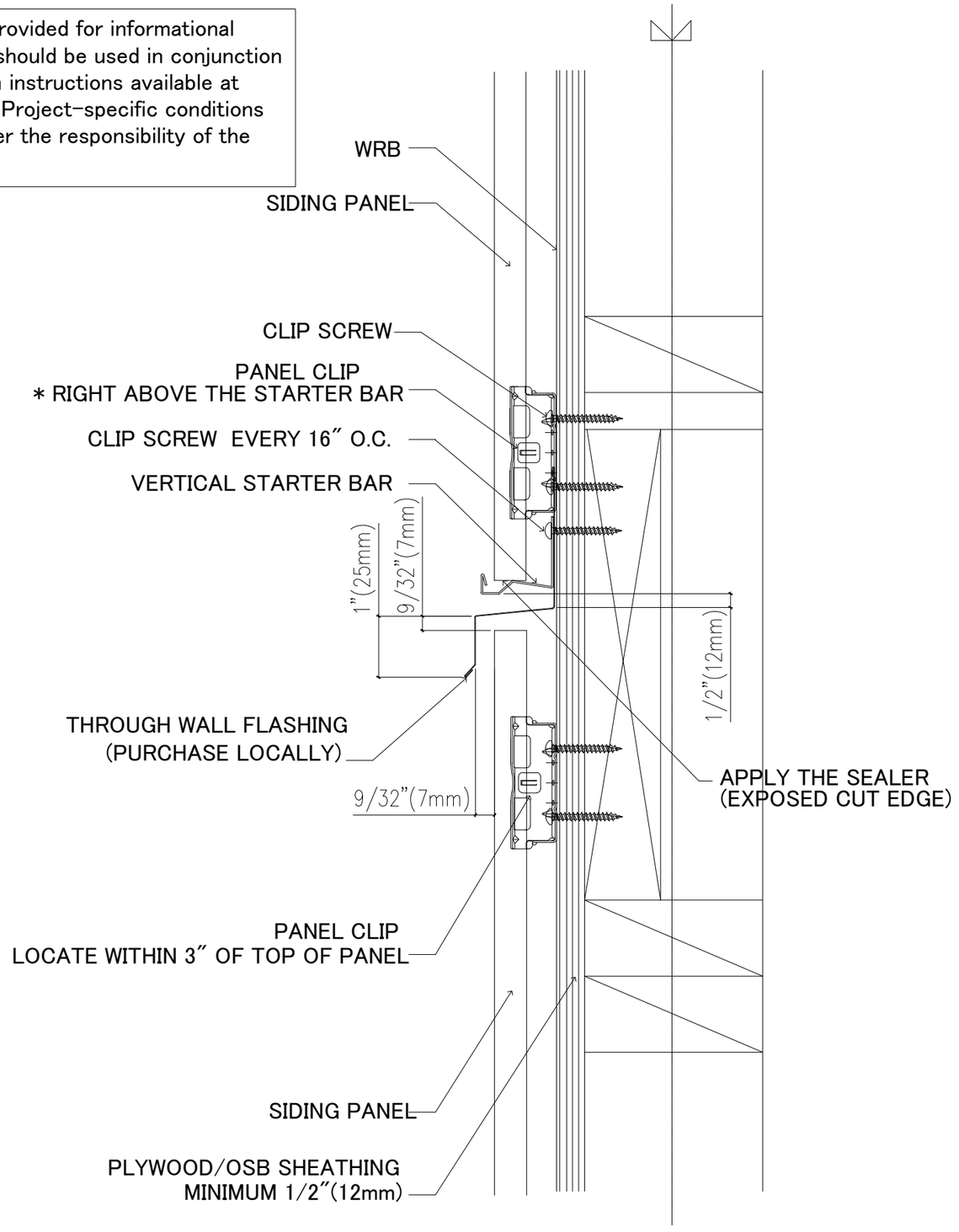

THROUGH WALL FLASHING (Wood/Vertical)

6

These details are provided for informational purposes only and should be used in conjunction with the installation instructions available at www.ceraclad.com. Project-specific conditions and details fall under the responsibility of the design professional.

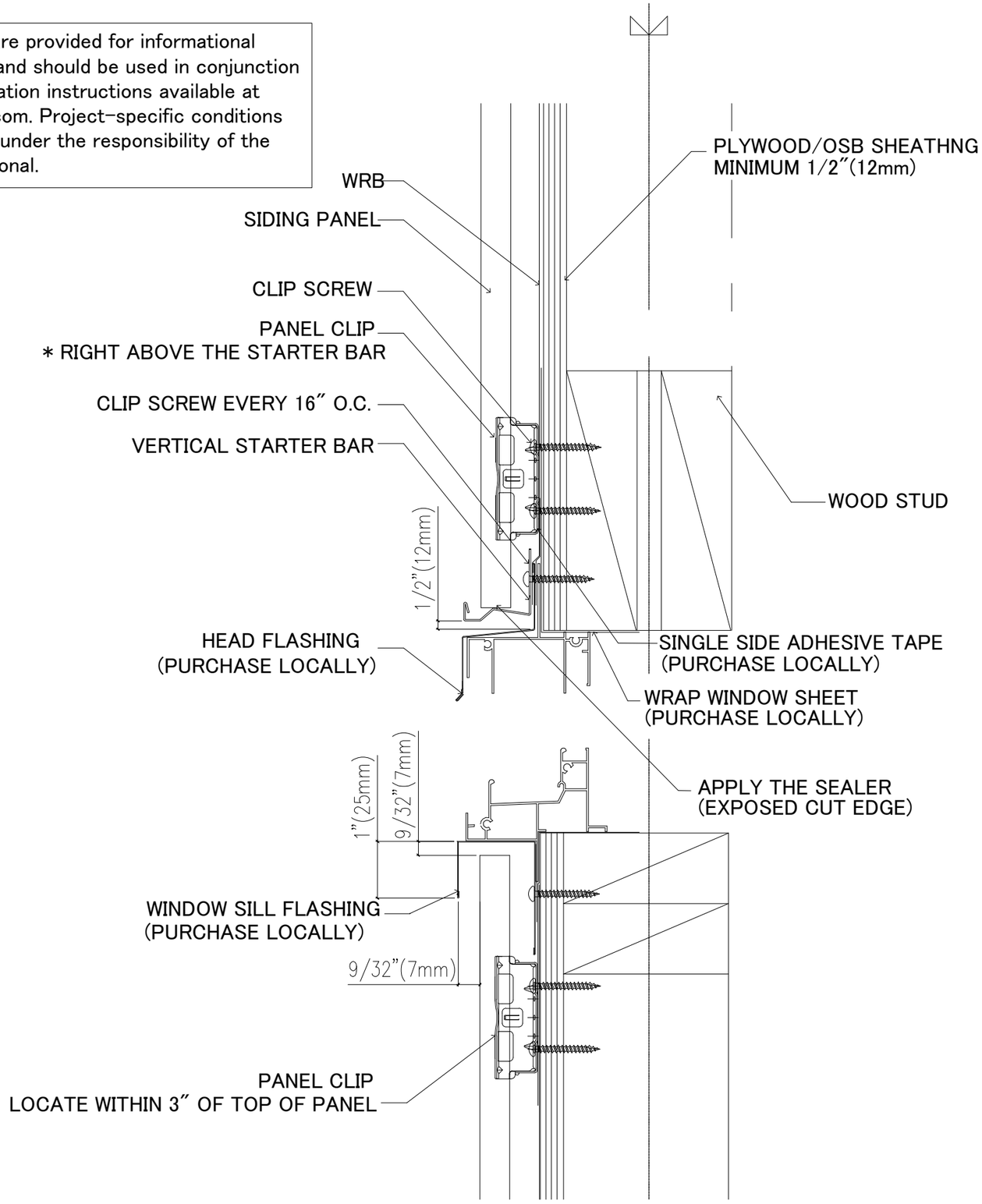

7 WINDOW AND DOOR HEAD AND SILL (Wood/Vertical)

These details are provided for informational purposes only and should be used in conjunction with the installation instructions available at www.ceraclad.com. Project-specific conditions and details fall under the responsibility of the design professional.

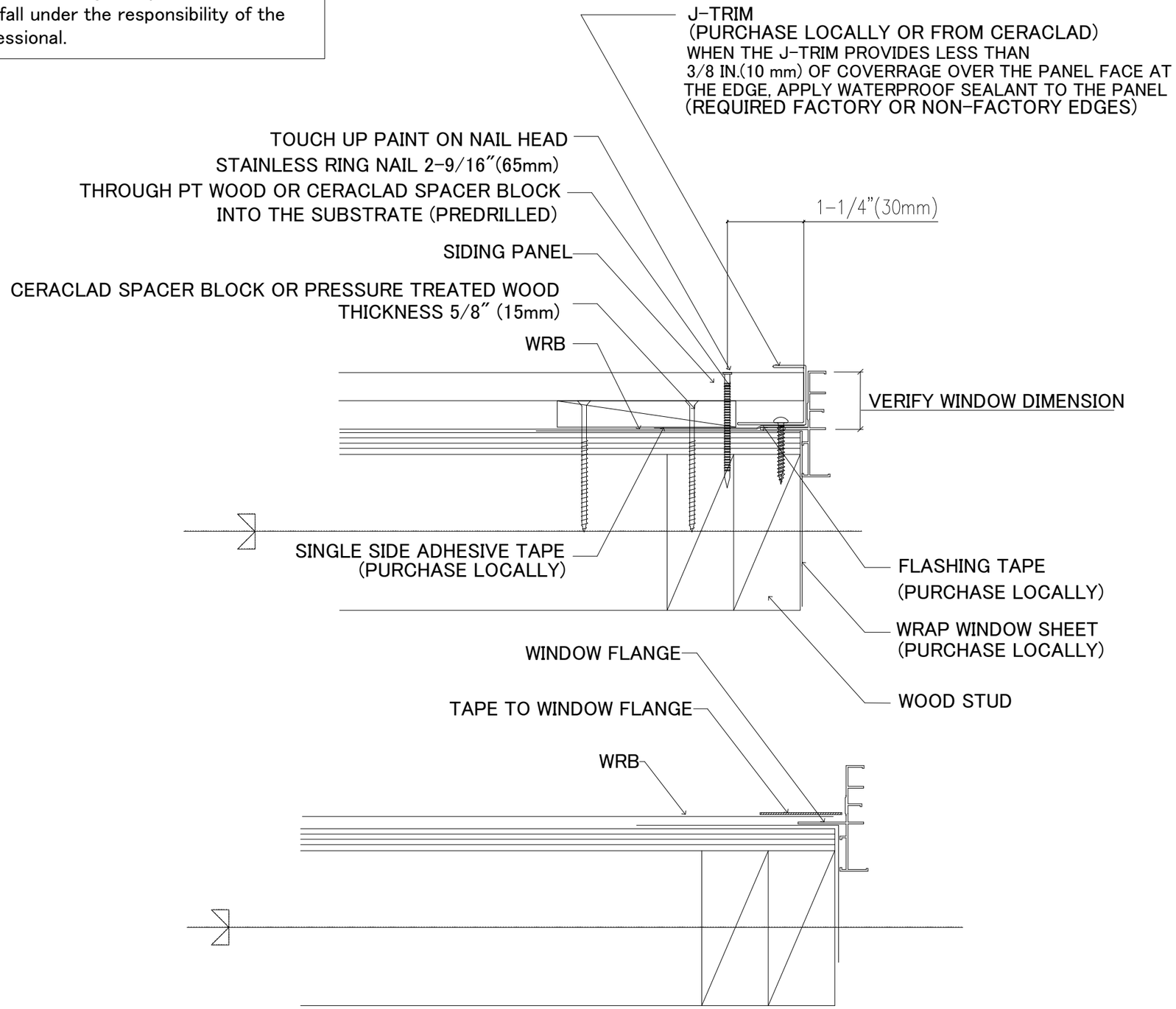

Note: This is a general recommendation. Responsibility for waterproofing details remains with the project envelope designer.

8 WINDOW AND DOOR JAMB (Wood/Vertical)

These details are provided for informational purposes only and should be used in conjunction with the installation instructions available at www.ceraclad.com. Project-specific conditions and details fall under the responsibility of the design professional.

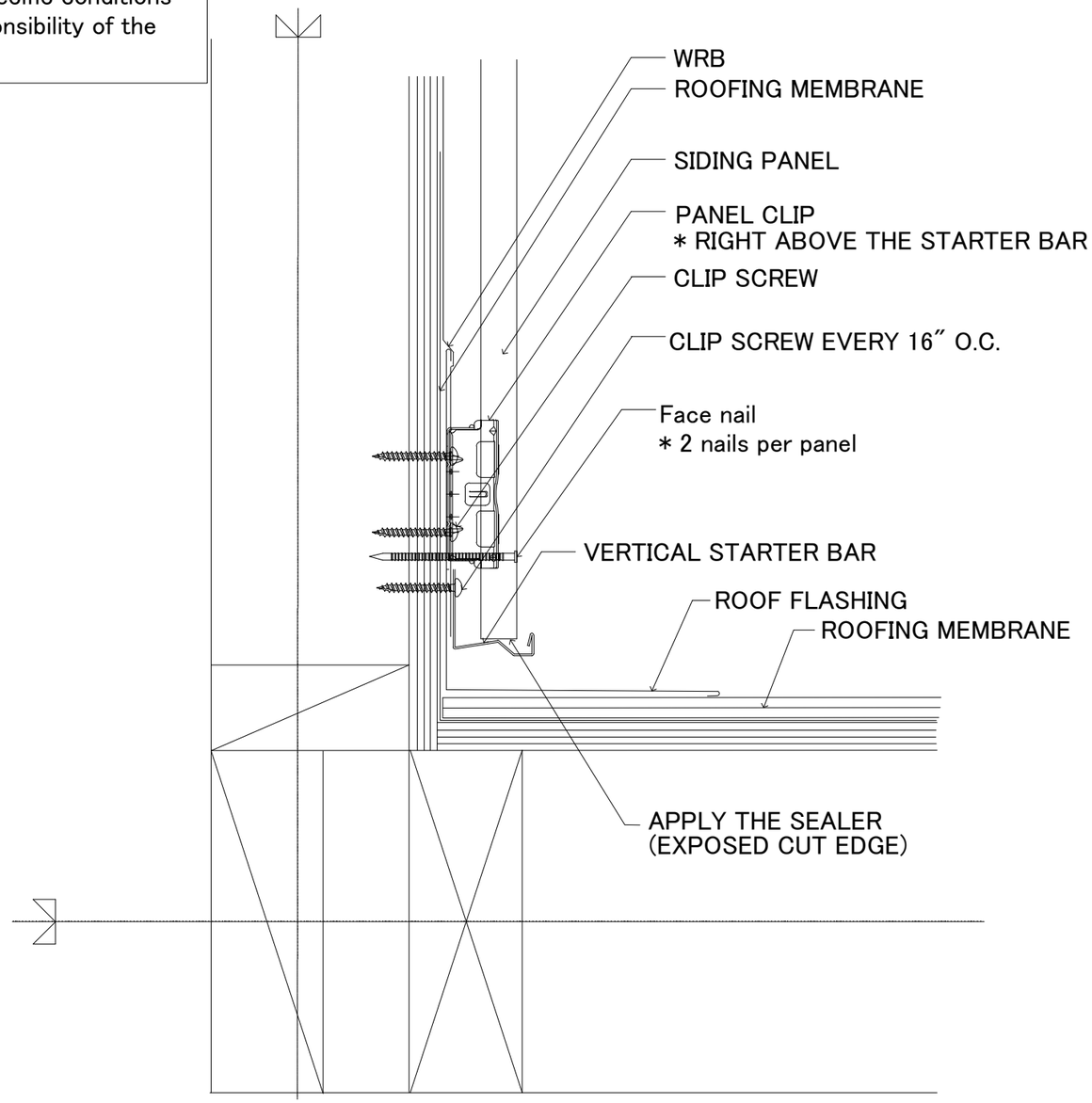

9 LOW SLOPE ROOF AND WALL (Wood/Vertical)

These details are provided for informational purposes only and should be used in conjunction with the installation instructions available at www.ceraclad.com. Project-specific conditions and details fall under the responsibility of the design professional.

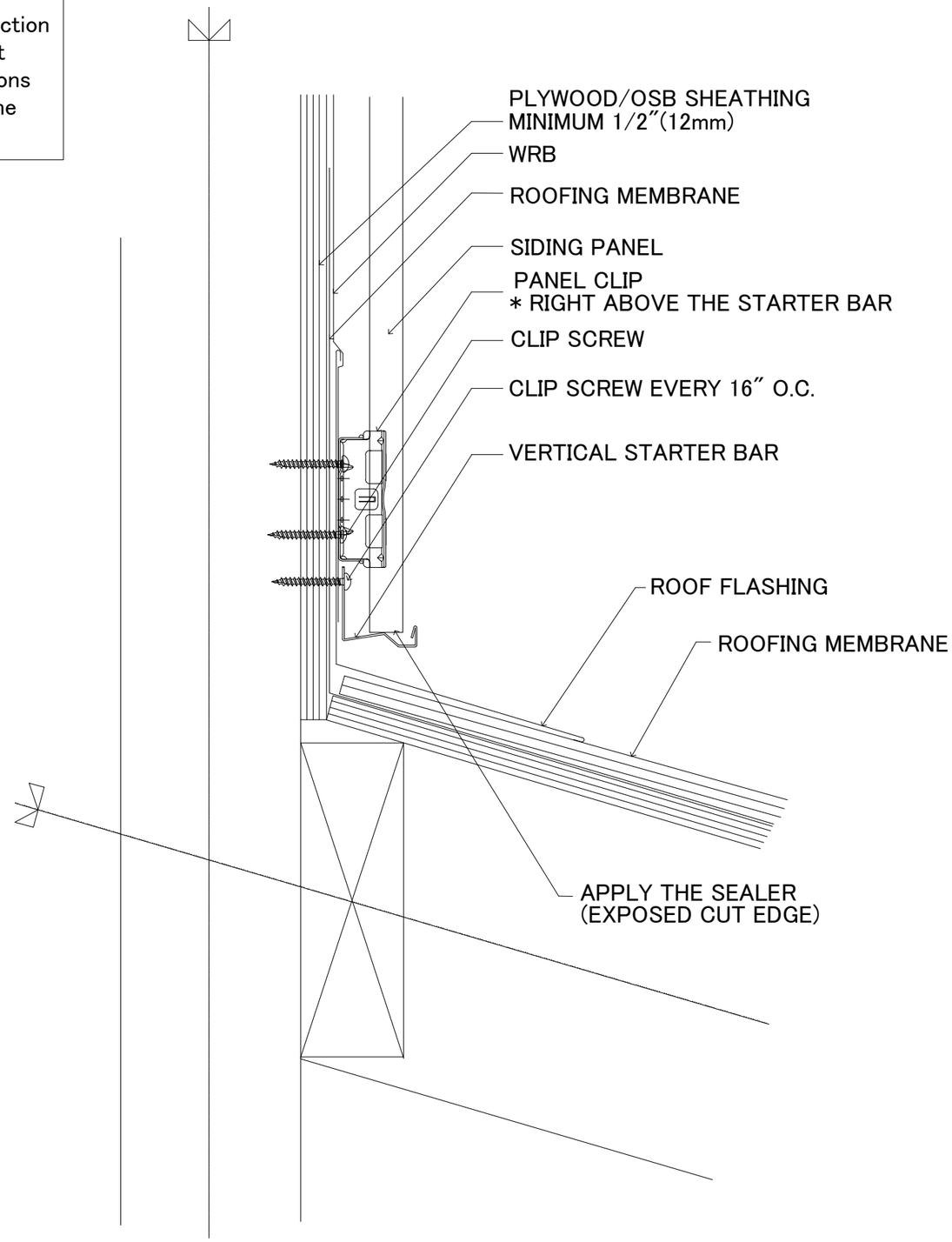

10 ROOF TO WALL (Wood/Vertical)

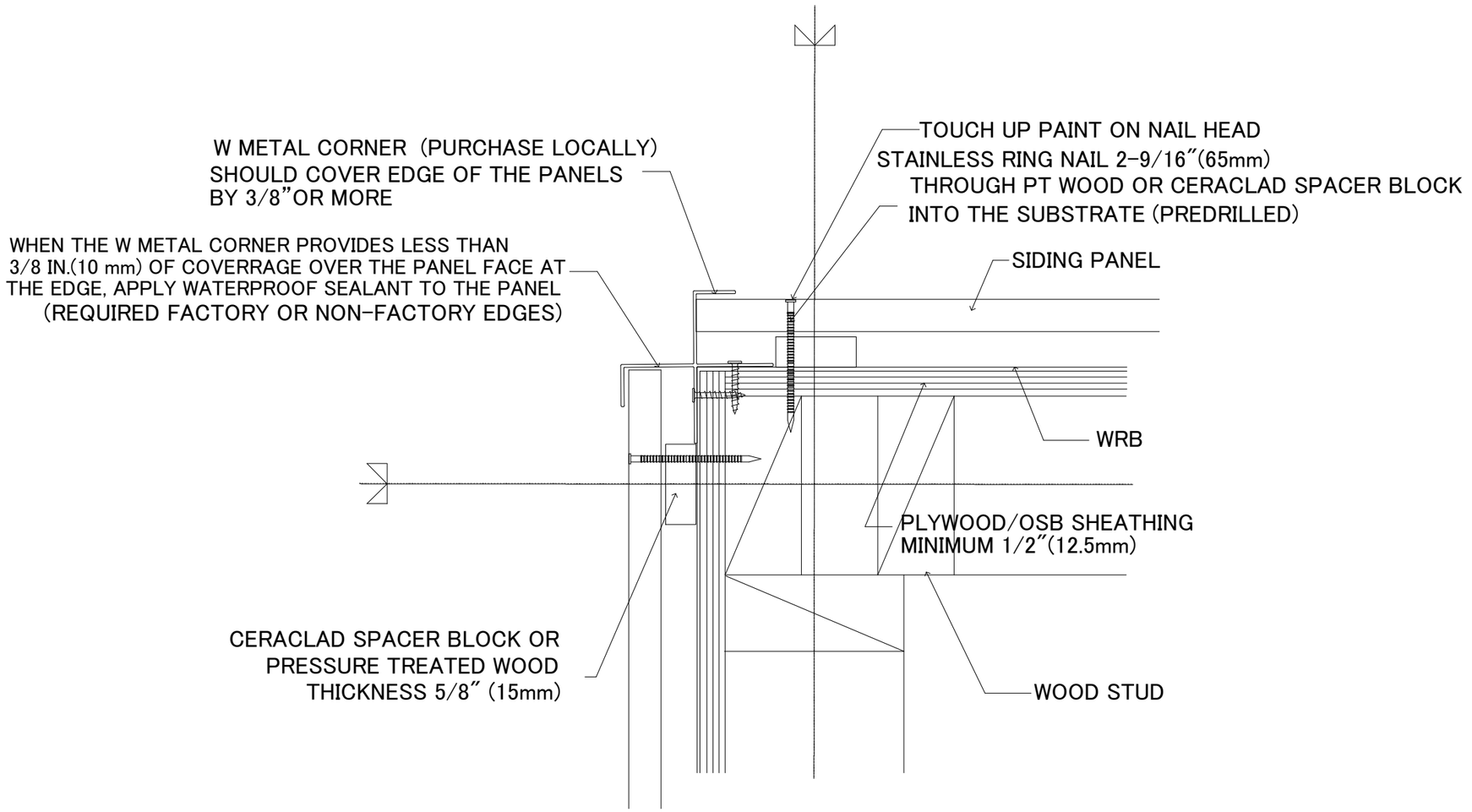

11 W METAL CORNER (Wood/Vertical)

These details are provided for informational purposes only and should be used in conjunction with the installation instructions available at www.ceraclad.com. Project-specific conditions and details fall under the responsibility of the design professional.

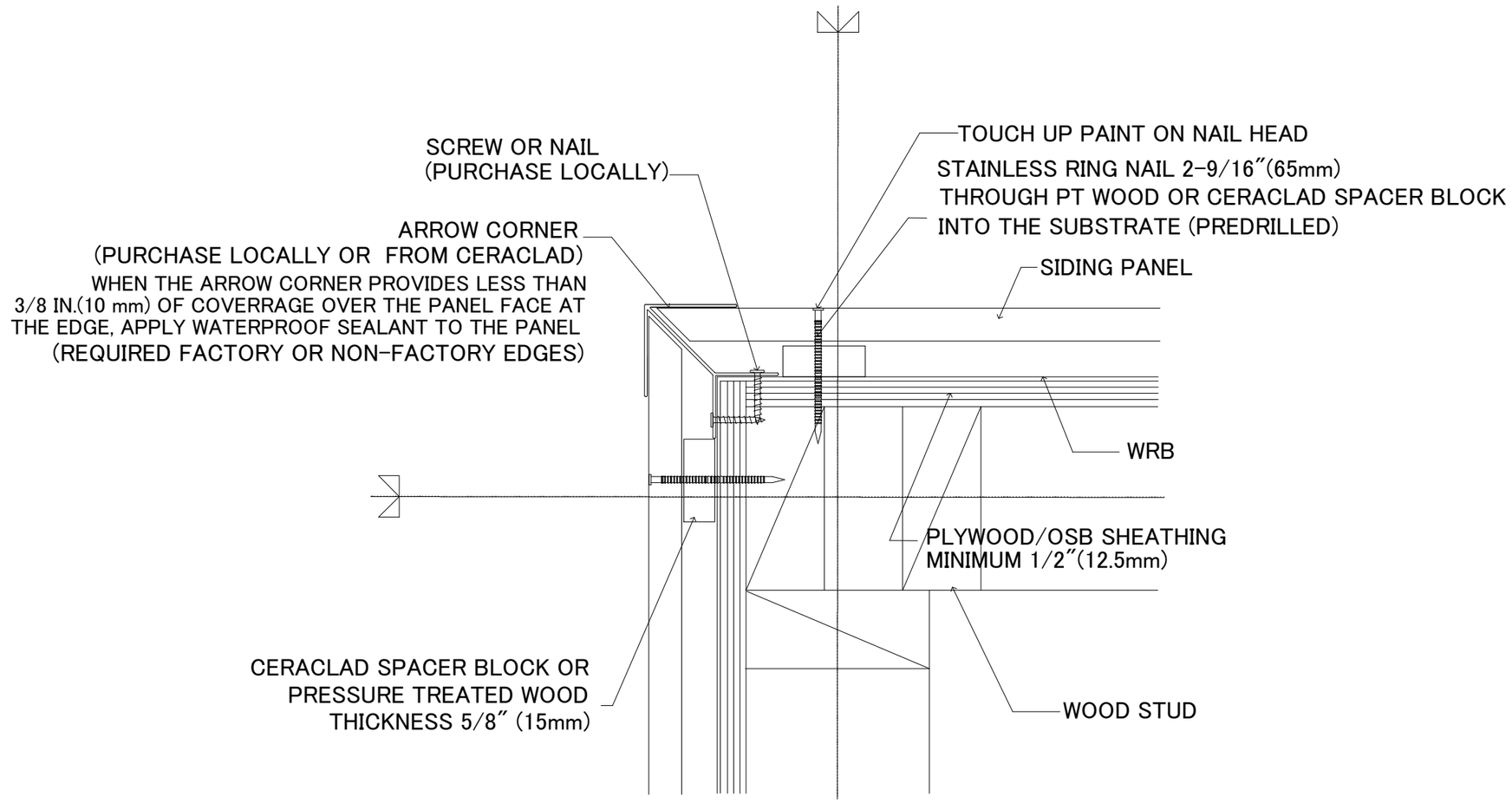

12 METAL ARROW CORNER (Wood/Vertical)

These details are provided for informational purposes only and should be used in conjunction with the installation instructions available at www.ceraclad.com. Project-specific conditions and details fall under the responsibility of the design professional.

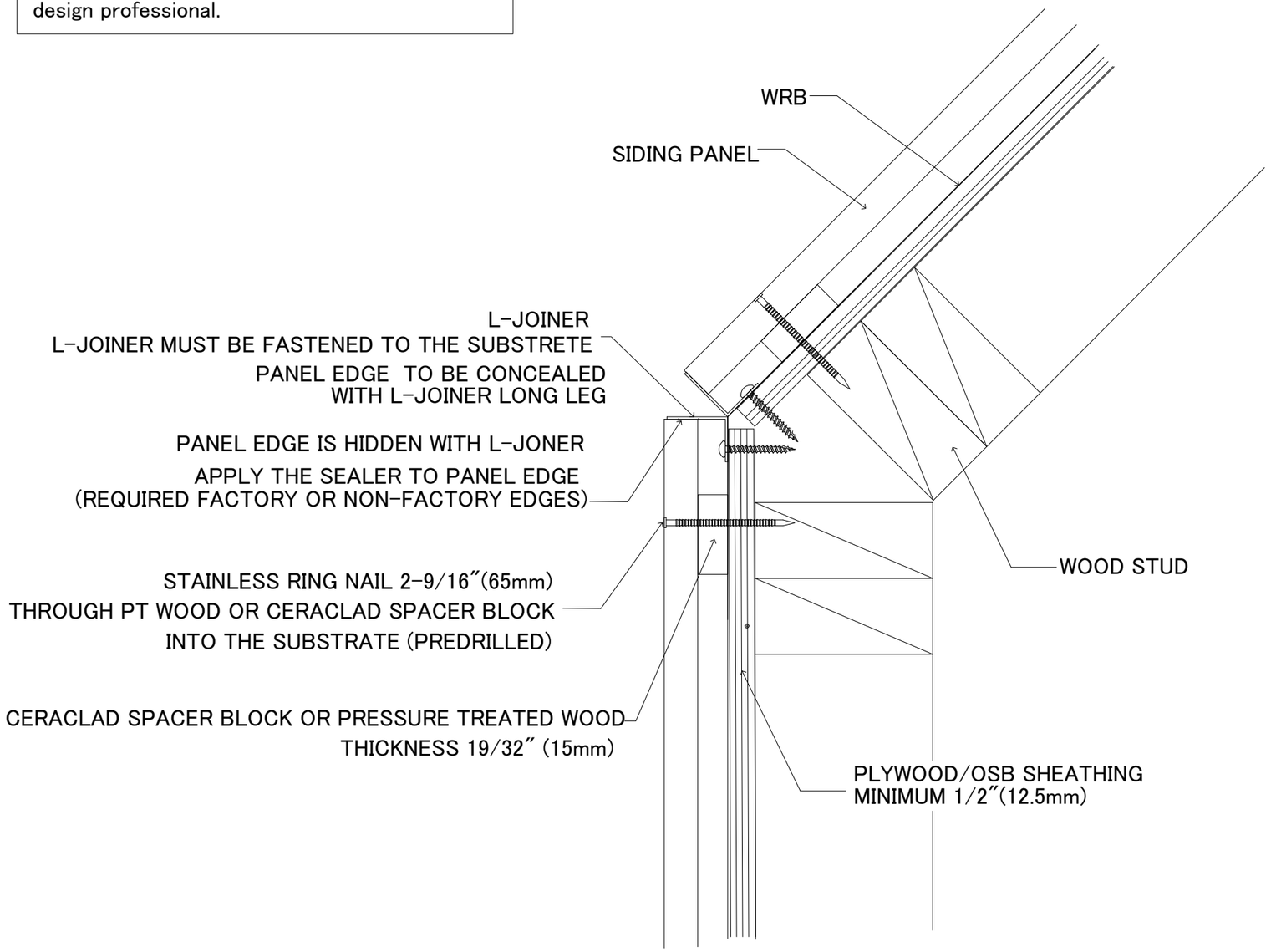

13 L-JOINER OBTUSE ANGLE INSTALLATION (Wood/Vertival)

These details are provided for informational purposes only and should be used in conjunction with the installation instructions available at www.ceraclad.com. Project-specific conditions and details fall under the responsibility of the design professional.

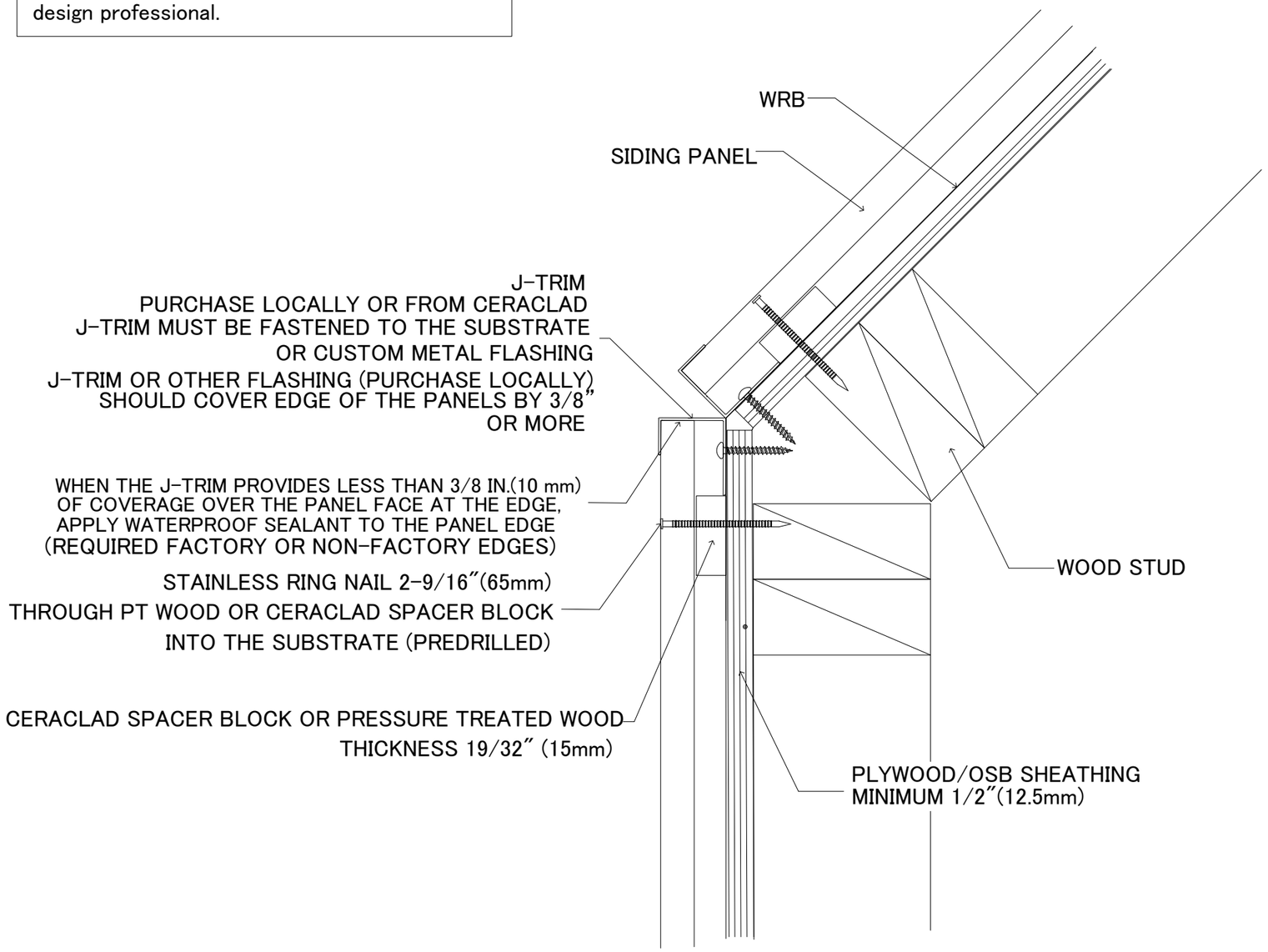

13a J-TRIM OBTUSE ANGLE INSTALLATION (Wood/Vertival)

These details are provided for informational purposes only and should be used in conjunction with the installation instructions available at www.ceraclad.com. Project-specific conditions and details fall under the responsibility of the design professional.

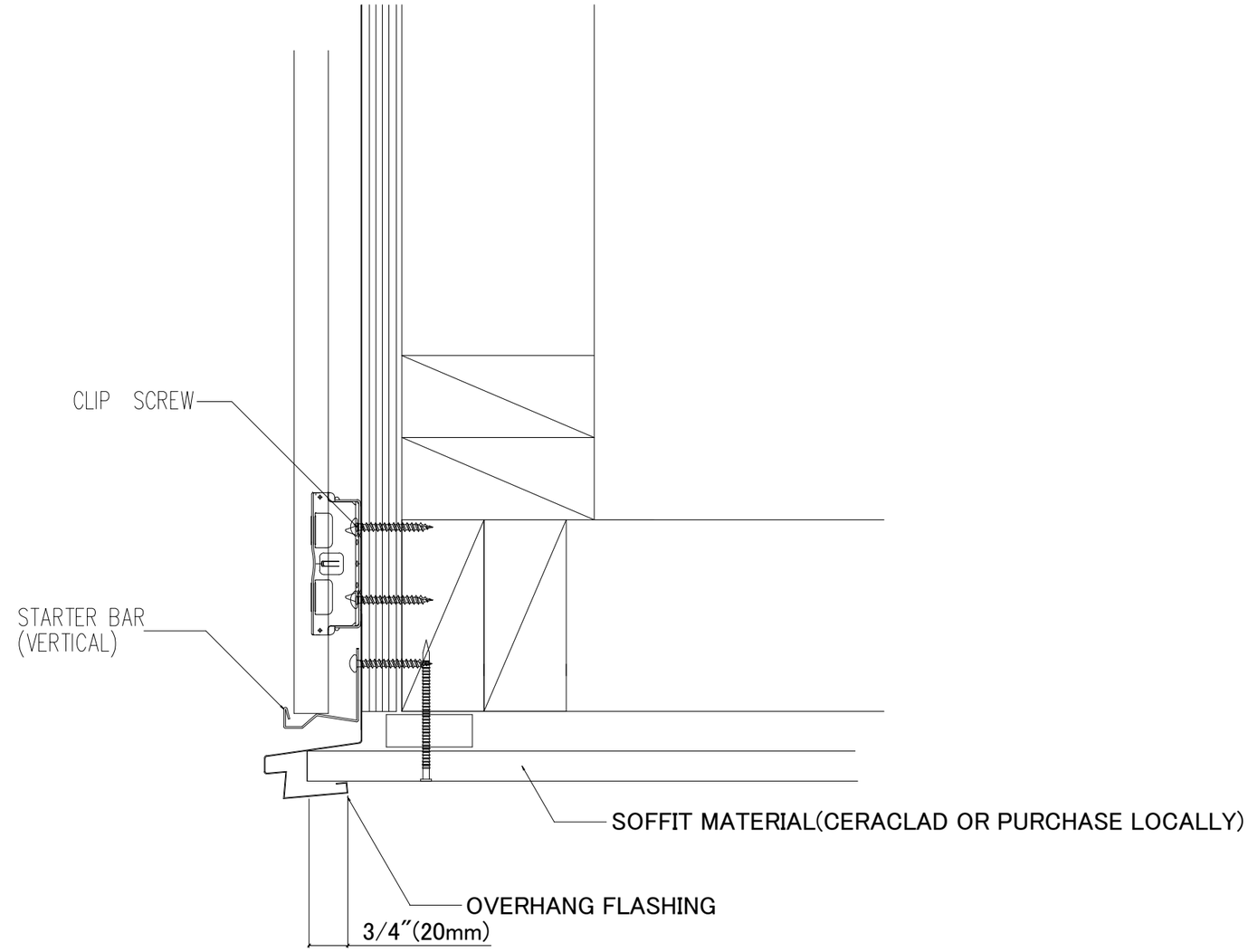

14 OVERHANG (Wood/Vertical)