GV-EVD5100 5MP H.264 Low Lux WDR IR Vandal Proof IP Dome



- 1/3.2” progressive scan low lux CMOS
- Dual streams from H.264 and MJPEG
- Up to 30 fps at 2592 x 1944
- Vandal resistance (IK10 for metal casing)
- Ingress protection (IP67)
- Megapixel varifocal lens
- P-Iris lens for auto Iris control
- Intelligent IR
- IR distance up to 30 m (100 ft)
- Day and Night function (with removable IR-cut filter)
- 3-axis mechanism (pan / tilt / rotate)
- DC 12V / PoE (IEEE 802.3af)
- Two-way audio
- Wide Dynamic Range (WDR)
- 3D noise reduction
- Defog
- Motion detection
- Tampering alarm
- Text overlay
- Privacy mask
- IP address filtering
- Recording assigned by GV-Edge Recording Manager (Windows & Mac)
- Supports iPhone, iPad, Android & 3GPP
- 31 languages on Web interface
- ONVIF (Profile S) conformant
- More storage option - NAS

Introduction

GV-EVD5100 is an outdoor camera designed with IK10 vandal resistance and IP67 ingress protection. The camera is featured with WDR, an automatic IR-cut filter and IR LEDs for day and night surveillance. Adjustable in 3 axis (pan, tilt and rotate), it offers an entry-level surveillance solution with all the essential features and excellent image quality.

Active Tampering Alarm

Tampered



Focus Change



Camera Shift



Dimensions

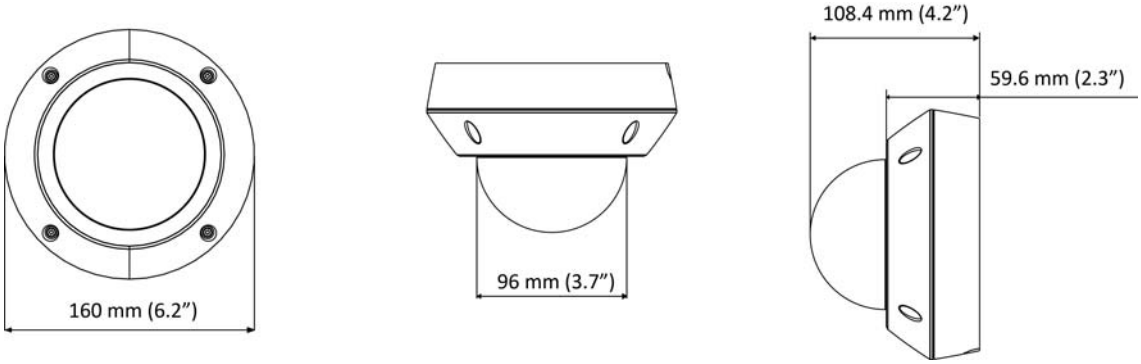

Specifications

Camera		
Image Sensor		1/3.2" progressive scan low lux CMOS
Picture Elements		2592 (H) x 1944 (V)
Minimum Illumination	Color	0.12 Lux
	B/W	0.10 Lux
	IR ON	0 Lux
Shutter Speed		Automatic, Manual (1/5 ~ 1/8000 sec)
White Balance		Automatic, Manual (2800K ~ 8500K)
Gain Control		Automatic
S/N Ratio		46 dB
WDR		Yes
Dynamic Range		Up to 72 dB
Lens		
Megapixel		Yes
Day/Night		Yes (with removable IR-cut filter)
Focal Length		3 ~ 9 mm
Lens Type		Varifocal
Maximum Aperture		F/1.7
Mount		Ø14 mm
Horizontal FOV		92° ~ 32°
Image Format		1/3.2"
Operation	Focus	Manual (w/lock)
	Zoom	Manual (w/lock)
	Iris	P-Iris
Max. Torque (Focus / Zoom Screws)		0.049 N.m
IR LED Quantity		20 IR LEDs
Max. IR Distance		30 m (100 ft)
Operation		
Video Compression		H.264, MJPEG
Video Streaming		Dual streams from H.264 and MJPEG
Frame Rate		30 fps at 2592 x 1944 (60/50 Hz) * The frame rate and the performance may vary depending on the number of connections and data bitrates (different scenes).
Image Setting		Brightness, Contrast, Saturation, Sharpness, Gamma, White Balance, Flicker-less, Image Orientation (Flip, Mirror, 0°, 90°, 180°, 270°-including Corridor format), Shutter Speed, D/N Sensitivity, Backlight Compensation, WDR, Defog, Low Lux Enhancement, Noise Reduction
Audio Compression		G.711
Audio Support		Two-way Audio (external microphone and speaker required)
Video Resolution		
Main Stream	4:3	2592 x 1944 (Default), 2048 x 1536, 1600 x 1200, 1280 x 960, 640 x 480, 320 x 240
	16:9	1920 x 1080, 1280 x 720, 640 x 360, 448 x 252
	5:4	1280 x 1024, 640 x 512, 320 x 256

Sub Stream	4:3	960 x 720 (Default), 640 x 480, 320 x 240
	16:9	640 x 360, 448 x 252
	5:4	640 x 512, 320 x 256
Network		
Interface		10/100 Ethernet
Ethernet Protocol		DHCP, DNS, DynDNS, FTP, HTTP, HTTPS, ICMP, IPv4, NTP, ONVIF (Profile S), QoS (DSCP), RTCP, RTSP, SNMP, SMTP, TCP/IP, UDP, UPnP, 3GPP/ISMA
Mechanical		
Temperature Detector		Yes
Camera Angle Adjustment	Pan	0° ~ 350°
	Tilt	0° ~ 75°
	Rotate	0° ~ 340°
Connectors	Power	2-pin terminal block (DC 12V, 1.25A), PoE
	Ethernet	Ethernet (10/100 Base-T), RJ-45 cable
	Audio	1 In (microphone phone jack, 3.5 mm / 0.14") 1 Out (stereo phone jack, 3.5 mm / 0.14")
	TV-Out	BNC connector (D1 resolution)
LED Indicator		2 LEDs: Power, Status
General		
Environment Temperature	Start-up	-20°C ~ 50°C (-4°F ~ 122°F)
	Operation	-30°C ~ 50°C (-22°F ~ 122°F)
Humidity		10% to 90% (no condensation)
Power Source		12V DC / PoE (IEEE 802.3af)
Max. Power Consumption		7 W
Dimension		ø 160 x 108.4 mm (6.2" x 4.27")
Weight		1.15 kg (2.54 lb)
Ingress Protection		IP67
Vandal Resistance		IK10
Regulatory		CE, FCC, RCM, RoHS compliant
Power over Ethernet		
PoE Standard		PoE (IEEE 802.3af Power over Ethernet / PD)
PoE Power Supply Type		End-Span
PoE Power Output		Per Port 48V DC, 350mA. Max. 15.4 watts
Web Interface		
Installation Management		Web-based configuration
Maintenance		Firmware upgrade through Web Browser or Utility
Access from Web Browser		Camera Live View, Video Recording, Change Video Quality, Bandwidth Control, Image Snapshot, Audio, Picture in Picture, Picture and Picture, Privacy Mask, Text Overlay, Digital PTZ
Language		Arabic / Bulgarian / Czech / Danish / Dutch / English / Finnish / French / German / Greek / Hebrew / Hungarian / Indonesian / Italian /Japanese / Lithuanian / Norwegian / Persian / Polish / Portuguese / Romanian / Russian / Serbian / Simplified Chinese / Slovakian / Slovenian / Spanish / Swedish / Thai / Traditional Chinese / Turkish
Applications		
Network Storage		GV-DVR/NVR, GV-Recording Server, GV-VMS
Smart Device Access		GV-Eye for iOS and Android
Live Viewing		Browser (IE, Chrome, Firefox, Safari), Mobile App
CMS Server support		GV-Control Center, GV-Center V2, GV-Vital Sign Monitor

Note:

1. When the resolution is set at 2592 x 1944:
   - If the camera is switched to single stream (while stream two is deselected) and Noise Reduction is disabled, the frame rate can reach up to 30 FPS.
   - If the camera is switched to dual streams and Noise Reduction is disabled, the frame rate can reach up to 25 FPS.
   - As long as Noise Reduction is enabled, whether the camera is switched to single stream or dual streams, the frame rate will be 15 FPS.
2. Specifications are subject to change without prior notice.

Packing List

1. Target Vandal Proof Dome
2. Screw x 4
3. Screw Anchor x 4
4. TV-Out Wire
5. Audio Wires x 2
6. Installation Sticker
7. Conduit Converter
8. RJ-45 Connector
9. Waterproof rubber sets
   (for RJ-45 Cat.5 and 12V DC / for RJ-45 Cat.6)
10. Torx Wrench
11. Big Concave hexagon Wrench
12. Small Concave hexagon Wrench
13. Silica Gel Bag
14. Sticker (for Silica Gel Bag)
15. Ruler
16. Download Guide
17. Warranty Card

Note: Power adapters can be purchased upon request.

Accessories

Model No.	Name		Details
GV-Mount100	Straight Tube and Junction Box Kit		Dimensions: 200 x 170 x 257.5 mm (7.9” x 6.7 x 10.1”) Weight: 3.17 kg (6.99 lb)
GV-Mount101	Straight Tube Kit		Dimensions: 219 x 125 x 332 mm (8.6” x 4.9” x 13.1”) Weight: 1.8 kg (3.97 lb)
GV-Mount200	Wall Pendant Tube		Dimensions: 225 x 140 x 250 mm (8.9” x 5.5” x 9.8”) Weight: 900 g (1.98 lb)
GV-Mount203	Wall Pendant Tube and Junction Box Kit		Dimensions: 315 x 195.5 x 225 mm (12.4” x 7.7” x 8.9”) Weight: 2.95 kg (6.5 lb)
GV-Mount206	Wall Mount Bracket Kit		Dimensions: 126.5 x 211.3 x 176.85 mm (5” x 8.3” x 6.96’’) Weight: 0.93 kg (2.06 lb)

GV-Mount 208-2	Swan Neck Mount		Dimensions: 1043 x 519 x 256 mm (41.06” x 20.43” x 10.08") Weight 10.5 kg (23.15 lb)
GV-Mount300-1	Convex Corner Adapter Kit	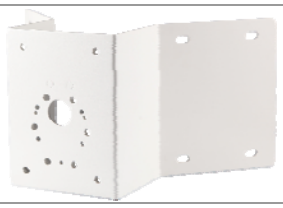	Dimensions: 238.6 x 395.2 x 210 mm (9.4’’ x 15.5” x 8.2”) Weight: 4.27 kg (9.41 lb)
GV-Mount310-1	Concave Corner Adapter Kit	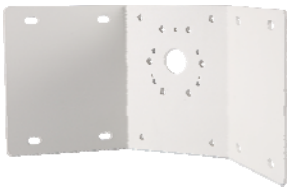	Dimensions: 111.2 x 369.9 x 210 mm (4.37’’ x 14.5” x 8.2”) Weight: 2.96 kg (6.53 lb)
GV-Mount400-1	Pole Mount Bracket Kit (Ø 4” ~ 6”)		Dimensions: Bracket: 68.4 x 240 x 163 mm (2.69” x 9.44’’ x 6.41”) Weight: 1.70 kg (3.75 lb) Steel Strap Diameter: Ø 4" ~ 6"
GV-Mount410-1	Pole Mount Bracket Kit (Ø 6” ~ 7.5”)		Dimensions: Bracket: 68.4 x 240 x 163 mm (2.69” x 9.44’’ x 6.41”) Weight: 1.70 kg (3.75 lb) Steel Strap Diameter: Ø 6" ~ 7.5"
GV-Mount702	Extension Tube		**Four** options are available. Dimensions: Ø 5.4 x 10 or 20 or 30 or 50 cm (Ø 2.1” x 3.9” or 7.9” or 11.8” or 19.7”) Weight: 180 g or 390 g or 550 g or 800 g (0.4 lb or 0.86 lb or 1.21lb or 1.76 lb)
GV-Mount903-1	Dome Housing		Dimensions: Ø 185.5 x 165.3 mm (Ø 7.3” x 6.5”) Weight: 900 g (1.98 lb)

GV-Mount916	In-Ceiling Mount		Dimensions: Ø 205 x 63.8 mm (Ø 8” x 2.5") Weight: 645 g
GV-PA191	PoE Adapter		Dimensions (H x W x D): 43 x 69 x 40 mm (1.69” x 2.72” x 1.57”) Weight: 130 g (0.29 lb)
Plastic PG21	Conduit Connector		The plastic PG21 conduit connector is used for running the wires of the camera through a 1/2” conduit pipe.
Metal PG21	Conduit Connector		The metal PG21 conduit connector allows you to run the wires through a 3/4” conduit pipe.
GV-POE Switch		The GV-POE Switch is designed to provide power along with network connection for IP devices. The GV-POE Switch is available in various models with different numbers and types of ports.	
Power Adapter		Contact our sales representatives for the countries and areas supported.	