GV-EFD5101 5MP H.264 Low Lux WDR IR Fixed IP Dome



- 1/3.2” progressive scan low lux CMOS
- Dual streams from H.264 and MJPEG
- Up to 30 fps at 2592 x 1944
- Intelligent IR
- Day and Night function (with removable IR-cut filter)
- Megapixel varifocal lens
- P-Iris lens for auto Iris control
- IR distance up to 30 m (98.4 ft)
- 3-axis mechanism (pan / tilt / rotate)
- DC 12V / PoE (IEEE 802.3af)
- Two-way audio
- Wide Dynamic Range (WDR)
- 3D noise reduction
- Defog
- Motion detection
- Tampering alarm
- Text overlay
- Privacy mask
- IP address filtering
- Recording assigned by GV-Edge Recording Manager (Windows & Mac)
- Supports iPhone, iPad, Android & 3GPP
- 31 languages on Web interface
- ONVIF (Profile S) conformant
- More storage option - NAS

Introduction

GV-EFD5101 is an indoor, fixed network camera equipped with an automatic IR-cut filter, Low Lux, and IR LEDs for day and night surveillance. Adjustable in 3 axis (pan, tilt and rotate), it offers an entry-level surveillance solution with all the essential features and excellent image quality.

Active Tampering Alarm

Tampered



Focus Change



Camera Shift



Dimensions

Hard-Ceiling Mount

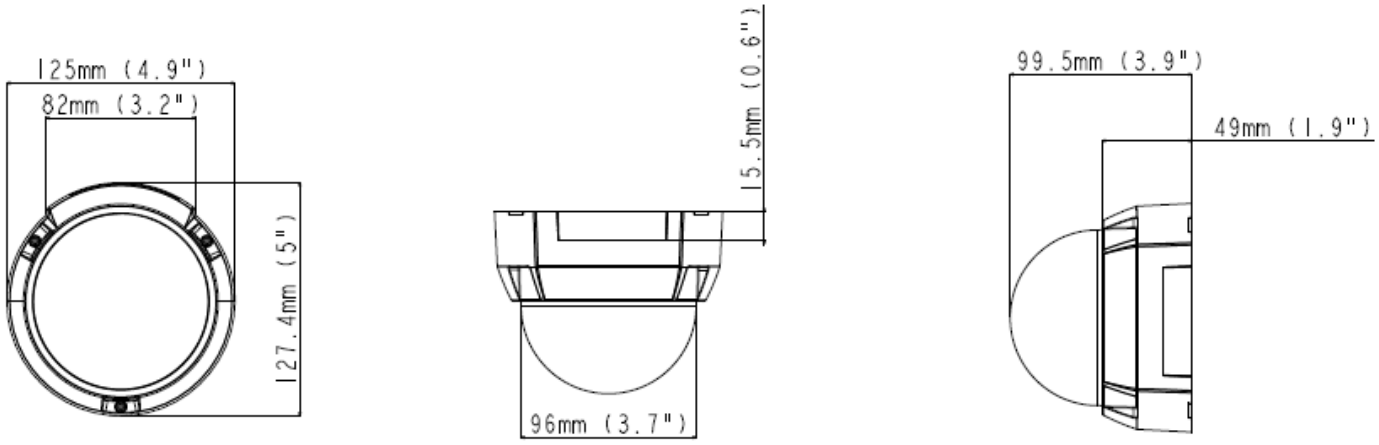

In-Ceiling Mount

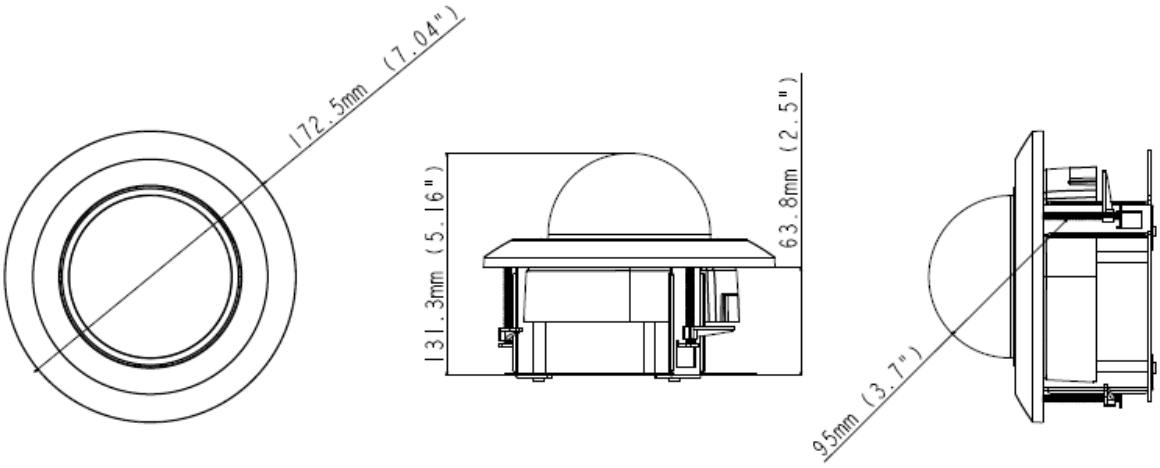

Specifications

Camera		
Image Sensor		1/3.2” progressive scan low lux CMOS
Picture Elements		2592 (H) x 1944 (V)
Minimum Illumination	Color	0.12 Lux
	B/W	0.10 Lux
	IR ON	0 Lux
Shutter Speed		Automatic, Manual (1/5 ~ 1/8000 sec)
White Balance		Automatic, Manual (2800K ~ 8500K)
Gain Control		Automatic
S/N Ratio		46 dB
WDR		Yes
Dynamic Range		Up to 72 dB
Lens		
Megapixel		Yes
Day/Night		Yes (with removable IR-cut filter)
Focal Length		3 ~ 9 mm
Lens Type		Varifocal
Maximum Aperture		F/1.7

Mount		Ø14 mm
Horizontal FOV		92° ~ 32°
Image Format		1/3.2"
Operation	Focus	Manual (w/lock)
	Zoom	Manual (w/lock)
	Iris	P-Iris
Max. Torque (Focus / Zoom Screws)		0.049 N.m
IR LED Quantity		20 IR LEDs
Max. IR Distance		30 m (98.4 ft)
Operation		
Video Compression		H.264, MJPEG
Video Streaming		Dual streams from H.264 and MJPEG
Frame Rate		30 fps at 2592 x 1944 (60/50 Hz) * The frame rate and the performance may vary depending on the number of connections and data bitrates (different scenes).
Image Setting		Brightness, Contrast, Saturation, Sharpness, Gamma, White Balance, Flicker-less, Image Orientation, Shutter Speed, D/N Sensitivity, Backlight Compensation, WDR, Defog, Low Lux Enhancement, Noise Reduction
Audio Compression		G.711
Audio Support		Two-way Audio (external microphone and speaker required)
Video Resolution		
Main Stream	4:3	2592 x 1944 (Default), 2048 x 1536, 1600 x 1200, 1280 x 960, 640 x 480, 320 x 240
	16:9	1920 x 1080, 1280 x 720, 640 x 360, 448 x 252
	5:4	1280 x 1024, 640 x 512, 320 x 256
Sub Stream	4:3	960 x 720 (Default), 640 x 480, 320 x 240
	16:9	640 x 360, 448 x 252
	5:4	640 x 512, 320 x 256
Network		
Interface		10/100 Ethernet
Ethernet Protocol		DHCP, DynDNS, FTP, HTTP, HTTPS, IPv6, NTP, ONVIF (Profile S), QoS (DSCP), RTSP, SNMP, SMTP, TCP, UDP, UPnP, 3GPP/ISMA
Mechanical		
Temperature Detector		Yes
Camera Angle Adjustment	Pan	0° ~ 350°
	Tilt	0° ~ 75°
	Rotate	0° ~ 340°
Connectors	Power	2-pin terminal block (DC 12V, 1.25A), PoE
	Ethernet	Ethernet (10/100 Base-T), RJ-45 cable
	Audio	1 In (microphone phone jack, 3.5 mm / 0.14”) 1 Out (stereo phone jack, 3.5 mm / 0.14”)
	TV-Out	BNC connector (D1 resolution)
LED Indicator		2 LEDs: Power, Status
General		
Environment Temperature	Start-up Operation	0°C ~ 50°C (32°F ~ 122°F)
Humidity		10% to 90% (no condensation)
Power Source		12V DC / PoE (IEEE 802.3af)
Max. Power Consumption		7 W
Dimension		ø 125 x 99.5 mm (4.92” x 3.92”)
Weight		470 g (1.04 lb)
Regulatory		CE, FCC, RCM, RoHS compliant
Power over Ethernet		
PoE Standard		PoE (IEEE 802.3af Power over Ethernet / PD)
PoE Power Supply Type		End-Span
PoE Power Output		Per Port 48V DC, 350mA. Max. 15.4 watts
Web Interface		
Installation Management		Web-based configuration
Maintenance		Firmware upgrade through Web Browser or Utility

Access from Web Browser	Camera Live View, Video Recording, Change Video Quality, Bandwidth Control, Image Snapshot, Audio, Picture in Picture, Picture and Picture, Privacy Mask, Text Overlay, Digital PTZ
Language	Arabic / Bulgarian / Czech / Danish / Dutch / English / Finnish / French / German / Greek / Hebrew / Hungarian / Indonesian / Italian /Japanese / Lithuanian / Norwegian / Persian / Polish / Portuguese / Romanian / Russian / Serbian / Simplified Chinese / Slovakian / Slovenian / Spanish / Swedish / Thai / Traditional Chinese / Turkish
Applications	
Network Storage	GV-DVR/NVR, GV-Recording Server, GV-VMS
Smart Device Access	GV-Eye for iOS and Android
Live Viewing	Browser (IE, Chrome, Firefox, Safari), Mobile App
CMS Server support	GV-Control Center, GV-Center V2, GV-Vital Sign Monitor

Note:

1. When the resolution is set at 2592 x 1944:
   - If the camera is switched to single stream (while stream two is deselected) and Noise Reduction is disabled, the frame rate can reach up to 30 FPS.
   - If the camera is switched to dual streams and Noise Reduction is disabled, the frame rate can reach up to 25 FPS.
   - As long as Noise Reduction is enabled, whether the camera is switched to single stream or dual streams, the frame rate will be 15 FPS.
2. Specifications are subject to change without prior notice.

Packing List

1. Target Fixed Dome
2. Screw x 3
3. Screw Anchor x 3
4. Torx Wrench
5. TV-Out Wire
6. Installation Sticker
7. Download Guide
8. Warranty Card

Note: Power adapters can be purchased upon request.

Accessories

Model No.	Name		Details
GV-Mount100	Straight Tube and Junction Box Kit		Dimensions: 200 x 170 x 257.5 mm (7.9” x 6.7” x 10.1”) Weight: 3.17 kg (6.99 lb)
GV-Mount101	Straight Tube Kit		Dimensions: 219 x 125 x 332 mm (8.6” x 4.9” x 13.1”) Weight: 1.8 kg (3.97 lb)
GV-Mount200	Wall Pendant Tube		Dimensions: 225 x 140 x 250 mm (8.9” x 5.5” x 9.8”) Weight: 900 g (1.98 lb)

Model No.	Name		Details
GV-Mount203	Wall Pendant Tube and Junction Box Kit		Dimensions: 315 x 195.5 x 225 mm (12.4” x 7.7” x 8.9”) Weight: 2.95 kg (6.5 lb)
GV-Mount300-1	Convex Corner Adapter Kit	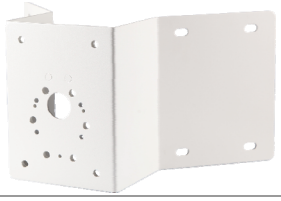	Dimensions: 238.6 x 395.2 x 210 mm (9.4’’ x 15.5” x 8.2”) Weight: 4.27 kg (9.41 lb)
GV-Mount310-1	Concave Corner Adapter Kit		Dimensions: 111.2 x 369.9 x 210 mm (4.37’’ x 14.5” x 8.2”) Weight: 2.96 kg (6.53 lb)
GV-Mount400-1	Pole Mount Bracket Kit (Ø 4” ~ 6”)		Dimensions: Bracket: 68.4 x 240 x 163 mm (2.69” x 9.44’’ x 6.41”) Weight: 1.70 kg (3.75 lb) Steel Strap Diameter: Ø 4" ~ 6"
GV-Mount410-1	Pole Mount Bracket Kit (Ø 6” ~ 7.5”)		Dimensions: Bracket: 68.4 x 240 x 163 mm (2.69” x 9.44’’ x 6.41”) Weight: 1.70 kg (3.75 lb) Steel Strap Diameter: Ø 6" ~ 7.5"
GV-Mount702	Extension Tube		**Four** options are available. Dimensions: Ø 5.4 x 10 or 20 or 30 or 50 cm (Ø 2.1” x 3.9” or 7.9” or 11.8” or 19.7”) Weight: 180 g or 390 g or 550 g or 800 g (0.4 lb or 0.86 lb or 1.21lb or 1.76 lb)
GV-Mount909	Wall Box Mount	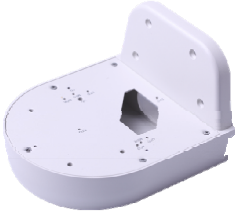	Dimensions: 170 x 150 x 110 mm (6.7” x 5.9” x 4.3’’) Weight: 610 g (1.34 lb)

Model No.	Name		Details
GV-Mount910	Power Box Mount Bracket		Dimensions: 112 x 98 x 7.5 mm (4.4” x 3.9” x 0.3’’) Weight: 105 g (0.23 lb)
GV-Mount913	Power Box Mount Bracket		Dimensions: Ø 146 x 7.5 mm (Ø 5.7” x 0.3’’) Weight: 180 g (0.4 lb)
GV-Mount915	In-Ceiling Mounting Kit for GV-EFD2101 / 3101 / 5101		Dimensions: Ø 172.5 x 63.8 mm (Ø 7.04” x 2.5’’) Weight: 424 g (0.93 lb)
GV-Mount917	GV-EFD2101 / 3101 / 5101 Dome Housing	 	Dimensions: Ø 186 x 97.5 mm (Ø 7.3” x 3.8’’) Weight: 948 g (2.09 lb)
GV-PA191	PoE Adapter		Dimensions (H x W x D): 43 x 69 x 40 mm (1.69” x 2.72” x 1.57”) Weight: 130 g (0.29 lb)
GV-POE Switch		The GV-POE Switch is designed to provide power along with network connection for IP devices. The GV-POE Switch is available in various models with different numbers and types of ports.	
Power Adapter		Contact our sales representatives for the countries and areas supported.	