GV-EFD2100 Series 2MP H.264 Low Lux WDR IR Mini Fixed IP Dome



- 1/2.8” progressive scan low lux CMOS
- Dual streams from H.264 and MJPEG
- Up to 25 fps at 1920 x 1080
- Intelligent IR
- Day and Night function (with removable IR-cut filter)
- 2-axis mechanism (pan / tilt)
- Built-in microphone
- Wide Dynamic Range (WDR)
- Defog
- Motion detection
- Tampering alarm
- Text overlay
- Privacy mask
- IP address filtering
- DC 12V / PoE (IEEE 802.3af)
- Megapixel lens
- Recording assigned by GV-Edge Recording Manager (Windows & Mac)
- Supports iPhone, iPad, Android & 3GPP
- 31 languages on Web interface
- ONVIF (Profile S) conformant
- More Storage Option - NAS

Introduction

The Target Mini Fixed Dome is an indoor, fixed, mini-sized network camera equipped with an automatic IR-cut filter and IR LEDs for day and night surveillance. Adjustable in 2 axis (pan and tilt), it offers an entry-level surveillance solution with all the essential features and excellent image quality.

Models

Model	Iris	Focal Length (mm)	Maximum Aperture	Image Format
GV-EFD2100-0F	Fixed	2.8	F/2.0	1/2.7”
GV-EFD2100-2F		3.8	F/1.8	

Active Tampering Alarm

Tampered



Focus Change



Camera Shift



Dimensions

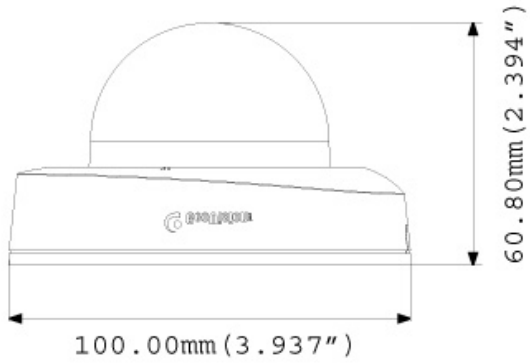

Specifications

Camera		GV-EFD2100-0F	GV-EFD2100-2F
Image Sensor		1/2.8" progressive scan low lux CMOS	
Picture Elements		1920 (H) x 1080 (V)	
Minimum Illumination	Color	0.07 Lux	
	B/W	0.04 Lux	
	IR ON	0 Lux	
Shutter Speed		Automatic, manual (1/5 ~ 1/8000 sec)	
White Balance		Automatic, manual (2800K ~ 8500K)	
Gain Control		Automatic	
S/N Ratio		48 dB	
WDR		Yes	
Dynamic Range		Up to 72 dB	
Lens			
Megapixel		Yes	
Day/Night		Yes (with removable IR-cut filter)	
Focal Length		2.8 mm	3.8 mm
Lens Type		Fixed	
Maximum Aperture		F/2.0	F/1.8
Mount		M12, Pitch 0.5 mm	
Horizontal FOV		99°	72°
Image Format		1/2.7"	
Operation	Focus	Fixed	
	Zoom	Fixed	
	Iris	Fixed	
IR LED Quantity		12 IR LEDs	
Max. IR Distance		15 m (50 ft)	
Operation			
Video Compression		H.264, MJPEG	
Video Streaming		Dual streams from H.264 and MJPEG	
Frame Rate		25 fps at 1920 x 1080 (60/50 Hz) * The frame rate and the performance may vary depending on the number of connections and data bitrates (different scenes).	
Image Setting		Brightness, Contrast, Saturation, Sharpness, Gamma, White Balance, Flicker-less, Image Orientation, Shutter Speed, D/N Sensitivity, Backlight Compensation, WDR, Defog	
Audio Compression		G.711	
Audio Support		One-way audio	
Video Resolution			
Main Stream	4:3	1280 x 960, 640 x 480, 320 x 240	
	16:9	1920 x 1080 (Default), 1280 x 720, 640 x 360, 448 x 252	
	5:4	1280 x 1024, 640 x 512, 320 x 256	

Sub Stream	4:3	640 x 480, 320 x 240
	16:9	640 x 360, 448 x 252 (Default)
	5:4	640 x 512, 320 x 256
Network		
Interface		10/100 Ethernet
Ethernet Protocol		DHCP, DynDNS, FTP, HTTP, HTTPS, NTP, ONVIF (Profile S), QoS (DSCP), RTSP, SNMP, SMTP, TCP, UDP, UPnP, 3GPP/ISMA, IPv4, IPv6
Mechanical		
Camera Angle Adjustment	Pan	-45° ~ 45°
	Tilt	0° ~ 63°
Connectors	Power	2-pin terminal block (DC 12V, 1.25A), PoE
	Ethernet	Ethernet (10/100 Base-T), RJ-45 cable
	Audio	1 In (built-in microphone)
LED Indicator		4 LEDs: Link, ACT, Power, Status
General		
Environment Temperature		0°C ~ 45°C (32°F ~ 113°F)
Humidity		10% to 90% (no condensation)
Power Source		12V DC/PoE (IEEE 802.3af)
Max. Power Consumption		5.8 W
Dimension		ø 100 x 60 mm (3.9” x 2.4”)
Weight		148 g (0.33 lb)
Regulatory		CE, FCC, RCM, RoHS compliant
Power over Ethernet		
PoE Standard		PoE (IEEE 802.3af Power over Ethernet / PD)
PoE Power Supply Type		End-span
PoE Power Output		Per Port 48V DC, 350 mA, Max. 15.4 watts
Web Interface		
Installation Management		Web-based configuration
Maintenance		Firmware upgrade through Web Browser or Utility
Access from Web Browser		Camera Live View, Video Recording, Change Video Quality, Bandwidth Control, Image Snapshot, Audio, Picture in Picture, Picture and Picture, Privacy Mask, Text Overlay, Digital PTZ
Language		Arabic / Bulgarian / Czech / Danish / Dutch / English / Finnish / French / German / Greek / Hebrew / Hungarian / Indonesian / Italian /Japanese / Lithuanian / Norwegian / Persian / Polish / Portuguese / Romanian / Russian / Serbian / Simplified Chinese / Slovakian / Slovenian / Spanish / Swedish / Thai / Traditional Chinese / Turkish
Applications		
Network Storage		GV-DVR/NVR, GV-Recording Server, GV-VMS
Smart Device Access		GV-Eye for iOS and Android
Live Viewing		IE, Mobile App
CMS Server support		GV-Control Center, GV-Center V2, GV-Vital Sign Monitor

Note: Specifications are subject to change without prior notice.

Packing List

1. Target Mini Fixed Dome
2. Screw x 2
3. Screw Anchor x 2
4. Focus Adjustment Ring
5. Download Guide
6. Warranty Card

Note: Power adapters can be purchased upon request.

Accessories

Model No.	Name		Details
GV-Mount909	Wall Mount Bracket	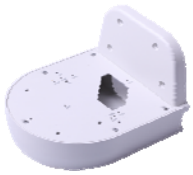	Dimensions: 170 x 150 x 110 mm (6.7” x 5.9” x 4.3”) Weight: 610 g (1.34 lb)
GV-Mount910	Power Box Mount Bracket		Dimensions: 112 x 98 x 7.5 mm (4.4” x 3.9” x 0.3”) Weight: 105 g (0.23 lb)
GV-Mount913	Power Box Mount Bracket		Dimensions: Ø 146 x 7.5 mm (Ø 5.7” x 0.3”) Weight: 180 g (0.4 lb)
GV-Mount918	Wall Mount Bracket for MFD/MDR/EFD/EDR		Dimensions: Ø 145 x 117 x 96 mm (Ø 5.71” x 4.60” x 3.78”) Weight: 350 g (0.77 lb)
GV-PA191	PoE Adapter		Dimensions (H x W x D): 43 x 69 x 40 mm (1.69” x 2.72” x 1.57”) Weight: 130 g (0.29 lb)
GV-PoE Switch			The GV-PoE Switch is designed to provide power along with network connection for IP devices. The GV-PoE Switch is available in various models with different numbers and types of ports.
Power Adapter			Contact our sales representatives for the countries and areas supported.