GV-EDR2700 Series Starlight 2MP H.265 Super Low Lux WDR Pro IR Mini Fixed Rugged IP Dome



- 1/2.8” progressive scan super low lux CMOS
- Min. illumination at 0.004 Lux
- Dual streams from H.265, H.264 and MJPEG
- Up to 30 fps at 1920 x 1080
- Day and Night function (with removable IR-cut filter)
- Vandal resistance (IK10 for metal casing)
- Ingress protection (IP67)
- 2-axis mechanism (pan / tilt)
- Built-in micro SD card slot (SD/SDHC/UHS-I, Class 10) for local storage
- DC 12V / PoE (IEEE 802.3af)
- Wide Dynamic Range Pro (WDR Pro)
- Intelligent IR
- 3D noise reduction
- Smart streaming
- Defog
- Motion detection
- Tampering alarm
- Text overlay
- Privacy mask
- IP address filtering
- Recording assigned by GV-Edge Recording Manager (Windows & Mac)
- Supports iPhone, iPad, Android & 3GPP
- 31 languages on Web interface
- ONVIF (Profile S) conformant

* Smart streaming requires either GV-DVR / NVR V8.7.0.0 or GV-VMS V16.10.3
* No memory card slot & local storage function for Argentina

Introduction

The Target Mini Fixed Rugged Dome is an outdoor, fixed, mini-sized network camera equipped with an automatic IR-cut filter and IR LEDs for day and night surveillance. The camera adheres to IK10 and IP67 standards. The camera comes with a built-in micro SD card slot for local storage. It is adjustable in 2 axes (pan and tilt) and can be connected through PoE. The camera can support H.265 video codec to achieve better compression ratio while maintaining high quality pictures at reduced network bandwidths. The camera is capable of providing a color live view not only in near darkness, but also under contrasting light intensities with its super low lux CMOS image sensor and WDR Pro.

Models

Model	Iris	Focal Length (mm)	Maximum Aperture	Image Format
GV-EDR2700-0F	Fixed	2.8	F/2.0	1/2.7”
GV-EDR2700-2F	Fixed	3.8	F/1.8	1/2.7”

Active Tampering Alarm

Tampered



Focus Change



Camera Shift



Dimensions

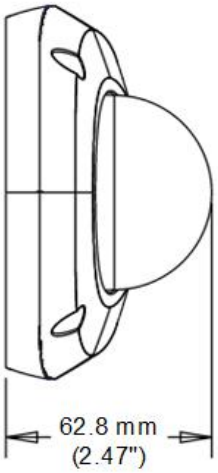

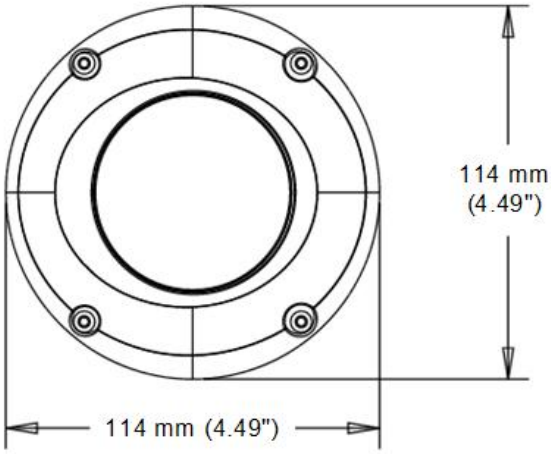

Specifications

Camera		GV-EDR2700-0F	GV-EDR2700-2F
Image Sensor		1/2.8" progressive scan super low lux CMOS	
Picture Elements		1920 (H) x 1080(V)	
Minimum Illumination	Color	0.005 Lux	
	B/W	0.004 Lux	
	IR ON	0 Lux	
Shutter Speed		Automatic, Manual (1/5 ~ 1/16000 sec.)	
White Balance		Automatic, Manual (2800K ~ 8500K)	
Gain Control		Automatic	
S/N Ratio		56 dB	
WDR		WDR Pro	
Dynamic Range		Up to 130 dB	
Lens			
Megapixel		Yes	
Day/Night		Yes (with removable IR-cut filter)	
Focal Length		2.8 mm	3.8 mm
Lens Type		Fixed	
Maximum Aperture		F/2.0	F/1.8
Mount		M12, Pitch 0.5 mm	
Horizontal FOV		100°	73°
Image Format		1/2.7"	
Operation	Focus	Fixed	
	Zoom	Fixed	
	Iris	Fixed	
IR LED Quantity		12 IR LEDs	
Max. IR Distance		40 m (130 ft)	
Operation			
Video Compression		H.265, H.264, MJPEG	

Video Streaming		Stream 1 from H.265 or H.264 Stream 2 from H.265, H.264 or MJPEG
Frame Rate		50Hz: 25 fps at 1920 x 1080 60Hz: 30 fps at 1920 x 1080 * The frame rate and the performance may vary depending on the number of connections and data bitrates (different scenes).
Image Setting		Brightness, Contrast, Saturation, Sharpness, Gamma, White Balance, Flicker-less, Image Orientation (Flip, Mirror, 0°, 90°, 180°, 270°-including Corridor format), Shutter Speed, Backlight Compensation, D/N Sensitivity, WDR, Defog, Low Lux Enhancement, Denoise, Metering
Audio Support		N/A
Video Resolution		
Main Stream	4:3	1280 x 960, 640 x 480
	16:9	1920 x 1080 (Default), 1280 x 720, 640 x 360
	5:4	1280 x 1024, 640 x 512
Sub Stream	4:3	640 x 480, 320 x 240
	16:9	640 x 360 (Default), 448 x 256
	5:4	640 x 512, 320 x 256
Network		
Interface		10/100 Ethernet
Ethernet Protocol		DHCP, DNS, DynDNS, FTP, HTTP, HTTPS, ICMP, IPv4, NTP, ONVIF (Profile S), QoS (DSCP), RTCP, RTSP, SMTP, SNMP, SSL, TCP/IP, UDP, UPnP, 3GPP/ISMA
Mechanical		
Temperature Detector		Yes
Camera Angle Adjustment	Pan	-45° ~ 45°
	Tilt	0° ~ 63°
Connectors	Power	2-pin terminal block (DC 12V, 1.25A), PoE
	Ethernet	Ethernet (10/100 Base-T), RJ-45 cable
	Local Storage	Micro SD card slot (SD/SDHC/UHS-I, Class 10) *UHS-II and SDXC card type is not supported
LED Indicator		4 LEDs: Link, ACT, Power, Status
General		
Environment Temperature	Start-up	-20°C ~ 60°C (-4°F ~ 140°F)
	Operation	-30°C ~ 60°C (-22°F ~ 140°F)
Humidity		10% to 90% (no condensation)
Power Source		12V DC / PoE (IEEE 802.3af)
Max. Power Consumption		6.07 W
Dimension		ø 114 x 62.8 mm (4.49'' x 2.47")
Weight		600 g (1.32 lb)
Ingress Protection		IP67
Vandal Resistance		IK10 for metal casing
Regulatory		CE, FCC, RCM, LVD, RoHS compliant
Power over Ethernet		
PoE Standard		PoE (IEEE 802.3af Power over Ethernet / PD)
PoE Power Supply Type		End-span and Mid-Span
PoE Power Output		Per Port 48V DC, 350 mA, Max. 15.4 watts
Web Interface		
Installation Management		Web-based configuration
Maintenance		Firmware upgrade through Web Browser or Utility
Access from Web Browser		Camera Live View, Video Recording, Change Video Quality, Bandwidth Control, Image Snapshot, Picture in Picture, Picture and Picture, Privacy Mask, Text Overlay, Digital PTZ
Language		Arabic / Bulgarian / Czech / Danish / Dutch / English / Finnish / French / German / Greek / Hebrew / Hungarian / Indonesian / Italian /Japanese / Lithuanian / Norwegian / Persian / Polish / Portuguese / Romanian / Russian / Serbian / Simplified Chinese / Slovakian / Slovenian / Spanish / Swedish / Thai / Traditional Chinese / Turkish
Applications		
Software Supported		GV-DVR / NVR (V8.7.3.0), GV-VMS (V16.11.0.0), GV-Control Center (V3.4.0.0), GV-Edge Recording Manager (V1.2.1.0), GV-Center V2 (V16.11.0.0), GV-Recording Server / Video Gateway (V1.3.0.0), GV-Redundant / Failover Server (V1.1.0.0)

Smart Device Access	GV-Eye for iOS and Android
Live Viewing	Browser (IE, Chrome, Firefox, Safari), Mobile App
CMS Server support	GV-Control Center, GV-Center V2, GV-Vital Sign Monitor

Note:

1. It is required to apply patch files to all the supported software mentioned above.
2. The signal range and data throughput may vary depending on the network conditions and environmental factors.
3. Specifications are subject to change without prior notice.

Packing List

1. H.265 Mini Fixed Rugged Dome
2. Screw x 2
3. Screw Anchor x 2
4. Focus Adjustment Ring
5. Installation Sticker
6. Conduit Converter
7. RJ-45 Connector
8. Waterproof Rubber Sets
   (for RJ-45 Cat.5 and 12V DC / for RJ-45 Cat.6)
9. Torx Wrench
10. Silica Gel Bag x 2
11. Adhesive Tape for Silica Gel Bag x 2
12. Concave Hexagon Wrench
13. Ruler
14. Screw for Conduit Converter x 2
15. Download Guide
16. Warranty Card

Note: Power adapters can be purchased upon request.

Accessories

Model No.	Name		Details
GV-Mount910	Power Box Mount Bracket		Dimensions: 112 x 98 x 7.5 mm (4.4'' x 3.9'' x 0.3'') Weight: 105 g (0.23 lb)
GV-Mount913	Power Box Mount Bracket		Dimensions: Ø 146 x 7.5 mm (Ø 5.7'' x 0.3'') Weight: 180 g (0.4 lb)
GV-Mount918	Wall Mount Bracket for MFD/MDR/EFD/EDR		Dimensions: Ø 145 x 117 x 96 mm (Ø 5.71 x4.60 x 3.78") Weight: 350 g (0.77 lb)
GV-PA191			Dimensions (H x W x D): 43 x 69 x 40 mm (1.69" x 2.72" x 1.57") Weight: 130 g (0.29 lb)
GV-PoE Switch			The GV-PoE Switch is designed to provide power along with network connection for IP devices. The GV-PoE Switch is available in various models with different numbers and types of ports.
Plastic PG21	Conduit Connector		The plastic PG21 conduit connector is used for running the wires of the camera through a 1/2" conduit pipe.
Power Adapter			Contact our sales representatives for the countries and areas supported.