GV-EBL4702 Series 4MP H.265 Super Low Lux WDR Pro IR Bullet IP Camera



- 1/3” progressive scan super low lux CMOS
- Min. illumination at 0.02 lux
- Triple streams from H.265, H.264, and MJPEG
- Up to 20 fps at 2592 x 1520, 25 fps at 2560 x 1440, 30 fps at 2048 x 1520
- Vandal resistance (IK10 for metal casing)
- Ingress protection (IP67)
- Day/Night function (with removable IR-cut filter)
- Intelligent IR
- IR distance up to 30 m (100 ft)
- Built-in micro SD card slot (SD/SDHC/SDXC/UHS-I) for local storage
- DC 12V / PoE (IEEE 802.3af)
- Wide Dynamic Range Pro (WDR Pro)
- Smart streaming
- Defog
- Text overlay
- Tampering alarm
- 3D noise reduction
- IP address filtering
- Supports iPhone, iPad, Android & 3GPP
- 31 languages on Web interface
- ONVIF (Profile S, T) conformant

* Smart streaming requires GV-DVR / NVR V8.7.0, GV-VMS V16.10.3 or later software versions.

Introduction

The Target Bullet Camera is a lightweight camera designed for outdoor environments. It adheres to the IP67 standard and has full protection against dust and jets of water. The camera supports H.265 video codec to achieve better compression ratio while maintaining high quality pictures at reduced network bandwidths. It can provide a color live view not only in near darkness but also under contrasting light intensities with its super low lux CMOS image sensor and WDR pro.

Models

Model	Iris	Focal Length (mm)	Maximum Aperture	Image Format
GV-EBL4702-1F	Fixed	6	F/2.0	1/2.7’’
GV-EBL4702-2F		3.8	F/1.8	
GV-EBL4702-3F		2.8	F/2.0	

Active Tampering Alarm

Tampered



Focus Change



Camera Shift



Overview

Dimensions

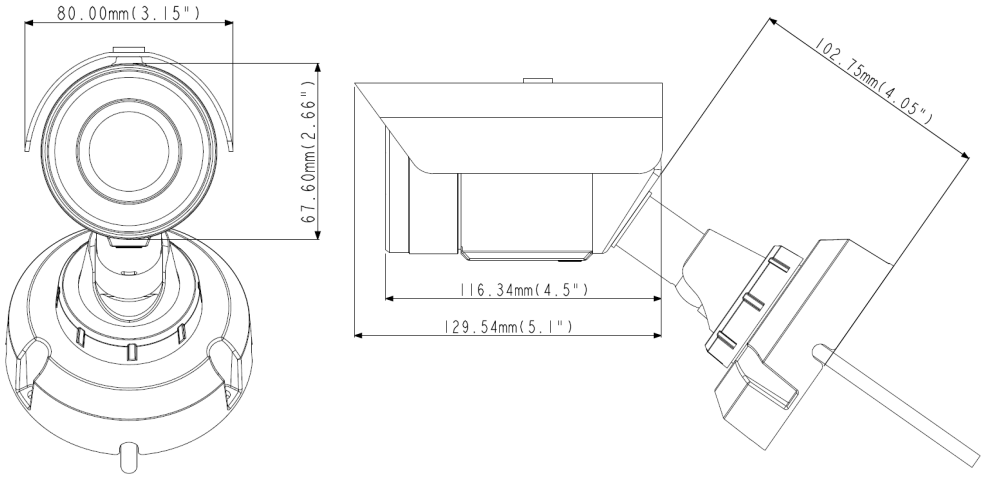

Specifications

Camera		GV-EBL4702-1F	GV-EBL4702-2F	GV-EBL4702-3F
Image Sensor		1/3” progressive scan super low lux CMOS		
Picture Elements		2592 (H) x 1520 (V)		
Minimum Illumination	Color	0.03 Lux		
	B/W	0.02 Lux		
	IR ON	0 Lux		
Shutter Speed		Automatic, manual (1/5 ~ 1/16000 sec)		
White Balance		Automatic, manual (2800K ~ 8500K)		
Gain Control		Automatic		
S/N Ratio		50 dB		
WDR		WDR Pro		
Dynamic Range		Up to 120 dB		
Lens				
Megapixel		Yes		
Day/Night		Yes (with removable IR-cut filter)		
Lens Type		Fixed		
Focal Length		6 mm	3.8 mm	2.8 mm
Maximum Aperture		F/2.0	F/1.8	F/2.0
Mount		Ø12 mm		
Horizontal FOV		51°	72°	96°
Image Format		1/2.7”		
Operation	Focus	Fixed		
	Zoom	Fixed		
	Iris	Fixed		
IR LED Quantity		6 IR LEDs		
Max. IR Distance		30 m (100 ft)		
Operation				
Video Compression		H.265, H.264, MJPEG		
Video Stream		Stream 1 from H.265 or H.264 Stream 2 from H.265, H.264 or MJPEG Stream 3 from H.265, H.264 or MJPEG		
Frame Rate		50 Hz: 20 fps at 2592 x 1520, 25 fps at 2560 x 1440, 25 fps at 2048 x 1520 60 Hz: 20 fps at 2592 x 1520, 24 fps at 2560 x 1440, 30 fps at 2048 x 1520 *The frame rate and the performance may vary depending on the number of connections and data bitrates (different scenes).		
Image Setting		Brightness, Contrast, Saturation, Sharpness, Gamma, White Balance, Flicker-less, Image Orientation (Flip, Mirror, 0°, 90°, 180°, 270°-including Corridor format), Shutter Speed, D/N Sensitivity, Backlight Compensation, WDR, Defog, Low Lux Enhancement, Denoise and Metering		
Audio Support		N/A		

Video Resolution		
Main Stream	4 : 3	2048 x 1520, 1600 x 1200, 1280 x 960, 640 x 480
	16 : 9	2592 x 1520, 2560 x 1440 (Default), 2304 x 1296, 1920 x 1080, 1280 x 720, 640 x 360
	5 : 4	1280 x 1024, 640 x 512
Sub Stream	4 : 3	1024 x 768, 640 x 480, 320 x 240
	16 : 9	1280 x 720, 640 x 360 (Default), 448 x 256
	5 : 4	1280 x 1024, 640 x 512, 320 x 256
Third Stream (Closed by Default)	4 : 3	640 x 480, 320 x 240
	16 : 9	640 x 360, 448 x 256
	5 : 4	640 x 512, 320 x 256
Network		
Interface		10/100 Ethernet
Protocol		DHCP, DNS, DynDNS, FTP, HTTP, HTTPS, ICMP, IPv4, IPv6, Multicast, NTP, ONVIF (Profile S, T), QoS (DSCP), RTCP, RTSP, SNMP, SMTP, SSL, TCP/IP, UDP, UPnP, 3GPP/ISMA
Security Feature		- No default ID and Password - 802.1x authentication - HTTPS with a SSL certificate stored in the camera - 256-bit AES encryption (requires firmware V1.14 or later working with GV-VMS V18.1 or later)
Mechanical		
Temperature Detector		Yes
Camera Angle Adjustment	Pan	0° ~ 360°
	Tilt	90° ~ 180°
Connectors	Power	2-pin terminal block (DC 12V, 1.25A), PoE
	Ethernet	Ethernet (10/100 Base-T), RJ-45 cable
	Local Storage	Micro SD card slot (SD/SDHC/SDXC/UHS-I, Class 10) *UHS-II card type is not supported.
General		
Environment Temperature	Start-up	-20°C ~ 50°C (-4°F ~ 122°F)
	Operation	-30°C ~ 50°C (-22°F ~ 122°F)
Humidity		10% to 90% (no condensation)
Power Source		12V DC / PoE (IEEE 802.3af)
Max. Power Consumption		9.12 W
Dimensions		129.54 x 80 x 102.75 mm (5.1” x 3.15” x 4.05”)
Weight		825 g (1.81 lb)
Ingress Protection		IP67
Vandal Resistance		IK10 for metal casing
Regulatory		CE, FCC, RCM, LVD, RoHS compliant
Power over Ethernet		
PoE Standard		PoE (IEEE 802.3af Power over Ethernet / PSE)
PoE Power Supply Type		End-span, Mid-span
PoE Power Output		Per Port 48V DC, 350mA, Max. 15.4 watts
Web Interface		
Installation Management		Web-based configuration
Maintenance		Firmware upgrade through Web Browser or Utility
Access from Web Browser		Camera Live View, Video Recording, Change Video Quality, Bandwidth Control, Image Snapshot, Picture in Picture, Picture and Picture, Privacy Mask, Tampering Alarm, Text Overlay, Digital PTZ
Language		Arabic / Bulgarian / Czech / Danish / Dutch / English / Finnish / French / German / Greek / Hebrew / Hungarian / Indonesian / Italian /Japanese / Lithuanian / Norwegian / Persian / Polish / Portuguese / Romanian / Russian / Serbian / Simplified Chinese / Slovakian / Slovenian / Spanish / Swedish / Thai / Traditional Chinese / Turkish
Application		
Software Supported		GV-DVR / NVR (V8.7.3.0), GV-VMS (V16.10.3.0), GV-Edge Recording Manager (V1.2.0.0), GV-Center V2 (V16.10), GV-Recording Server (V1.3.0.0), GV-Redundant / Failover Server (V1.1.0.0)
Smart Device Access		GV-Eye for iOS and Android
Remote Live Viewing		Browser (IE, Chrome, Firefox, Safari), Mobile App
CMS Server support		GV-Control Center, GV-Center V2, GV-Vital Sign Monitor

Note:
1. It's required to apply patch files to all the supported software mentioned above.
2. The signal range and data throughput may vary depending on the network conditions and environmental factors.
3. Specifications are subject to change without notice.

Packing List

1. H.265 Bullet Camera
2. Sun-Shield Cover
3. Screw for Sun-Shield Cover x 2
4. Screw for Supporting Rack x 3
5. Screw Anchor x 3
6. Silica Gel bag x 2
7. Washer x 2
8. Terminal Block
9. Screw for Mounting Kit x 3
10. Nut for Mounting Kit x 3
11. Hex Wrench
12. Download Guide
13. Warranty Card

Note: The power adapter can be purchased upon request.

Accessories

Model No.	Name		Details
GV-Mount300-1	Convex Corner Adapter Kit	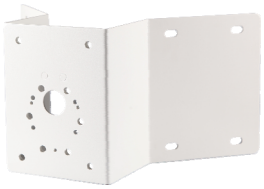	Dimensions: 238.6 x 395.2 x 210 mm (9.4'' x 15.5" x 8.2") Weight: 4.27 kg (9.41 lb)
GV-Mount310-1	Concave Corner Adapter Kit		Dimensions: 111.2 x 369.9 x 210 mm (4.37'' x 14.5" x 8.2") Weight: 2.96 kg (6.53 lb)
GV-Mount400-1	Pole Mount Bracket Kit (Ø 4" ~ 6")		Dimensions: Bracket: 68.4 x 240 x 163 mm (2.69" x 9.44'' x 6.41") Weight: 1.70 kg (3.75 lb) Steel Strap Diameter: Ø 4" ~ 6"
GV-Mount410-1	Pole Mount Bracket Kit (Ø 6" ~ 7.5")		Dimensions: Bracket: 68.4 x 240 x 163 mm (2.69" x 9.44'' x 6.41") Weight: 1.70 kg (3.75 lb) Steel Strap Diameter: Ø 6" ~ 7.5"
GV-PA191	PoE Adapter		GV-PA191 is a Power over Ethernet (PoE) adapter designed to provide power to the IP device through a single Ethernet cable.
GV-PA301	Gigabit PoE Adapter		GV-PA301 is a Gigabit Power over Ethernet (PoE) adapter.
GV-POE Switch		GV-POE Switch is designed to provide power along with network connection for IP devices. The GV-POE Switch is available in various models with different numbers and types of ports.	
Power Adapter		Contact our sales representatives for the countries and areas supported.	