GV-EBL2100 Series 2MP H.264 Low Lux WDR IR Bullet IP Camera



- 1/2.8" progressive scan low lux CMOS
- Dual streams from H.264 and MJPEG
- Up to 25 fps at 1920 x 1080
- Intelligent IR
- Day and Night function (with removable IR-cut filter)
- Wide Dynamic Range (WDR)
- Defog
- Vandal resistance (IK10 for metal casing)
- Ingress protection (IP67)
- Motion detection
- Tampering alarm
- Text overlay
- Privacy mask
- IP address filtering
- DC 12V / PoE (IEEE 802.3af)
- Megapixel lens
- Recording assigned by GV-Edge Recording Manager (Windows & Mac)
- Supports iPhone, iPad, Android & 3GPP
- 31 languages on Web interface
- ONVIF (Profile S) conformant
- More storage option - NAS

Introduction

The Target Bullet Camera is a light-weighted cameras designed for outdoor environments. It adheres to the IP67 standard and has full protection against dust and jets of water. The camera offers an entry-level surveillance solution with all the essential features and excellent image quality.

Models

Model	Iris	Focal Length (mm)	Maximum Aperture	Image Format
GV-EBL2100-1F	Fixed	6	F/1.8	1/2.7''
GV-EBL2100-2F		3.8		

Active Tampering Alarm

Tampered



Focus Change



Camera Shift



Overview

Panel





Dimensions

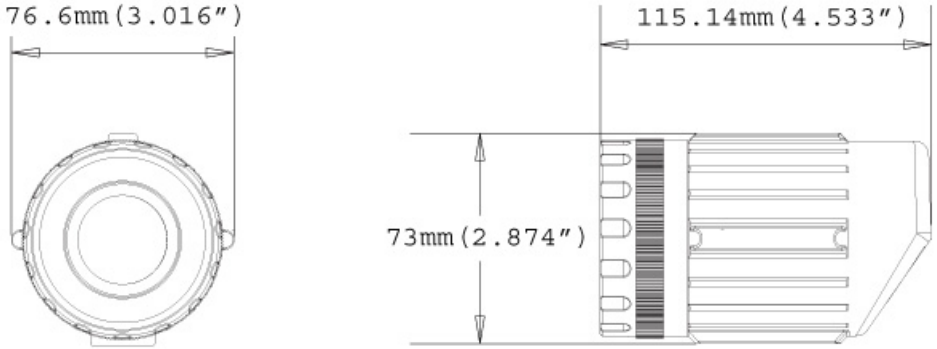

Specifications

Camera		GV-EBL2100-1F	GV-EBL2100-2F
Image Sensor		1/2.8" progressive scan low lux CMOS	
Picture Elements		1920 (H) x 1080 (V)	
Minimum Illumination	Color	0.07 Lux	
	B/W	0.04 Lux	
	IR ON	0 Lux	
Shutter Speed		Automatic, manual (1/5 ~ 1/8000 sec)	
White Balance		Automatic, manual (2800K ~ 8500K)	
Gain Control		Automatic	
S/N Ratio		48 dB	
WDR		Yes	
Dynamic Range		Up to 72 dB	
Lens			
Megapixel		Yes	
Day/Night		Yes (with removable IR-cut filter)	
Lens Type		Fixed	
Focal Length		6 mm	3.8 mm
Maximum Aperture		F/1.8	
Mount		M12, Pitch 0.5 mm	
Horizontal FOV		51°	72°
Image Format		1/2.7"	
Operation	Focus	Fixed	
	Zoom	Fixed	
	Iris	Fixed	
IR LED Quantity		24 IR LEDs	
Max. IR Distance		30 m (98.4 ft)	

Operation		
Video Compression		H.264, MJPEG
Video Stream		Dual streams from H.264 and MJPEG
Frame Rate		25 fps at 1920 x 1080 (60/50 Hz) *The frame rate and the performance may vary depending on the number of connections and data bitrates (different scenes).
Image Setting		Brightness, Contrast, Saturation, Sharpness, Gamma, White Balance, Flicker-less, Image Orientation, Shutter Speed, D/N Sensitivity, Backlight Compensation, WDR, Defog
Audio Support		No
Video Resolution		
Main Stream	4 : 3	1280 x 960, 640 x 480, 320 x 240
	16 : 9	1920 x 1080 (Default), 1280 x 720, 640 x 360, 448 x 252
	5 : 4	1280 x 1024, 640 x 512, 320 x 256
Sub Stream	4 : 3	640 x 480, 320 x 240
	16 : 9	640 x 360, 448 x 252 (Default)
	5 : 4	640 x 512, 320 x 256
Network		
Interface		10/100 Ethernet
Protocol		DHCP, DynDNS, FTP, HTTP, HTTPS, NTP, ONVIF (Profile S), QoS (DSCP), RTSP, SNMP, SMTP, TCP, UDP, UPnP, 3GPP/ISMA, IPv4, IPv6
Mechanical		
Connectors	Power	2-pin terminal block (DC 12V, 1.25A), PoE
	Ethernet	Ethernet (10/100 Base-T), RJ-45 cable
General		
Environment Temperature	Start-up	-20°C ~ 50°C (-4°F ~ 122°F)
	Operation	-30°C ~ 50°C (-22°F ~ 122°F)
Humidity		10% to 90% (no condensation)
Power Source		12V DC / PoE (IEEE 802.3af)
Max. Power Consumption		7.8 W
Dimensions		115 x 76 x 73 mm (4.5” x 3.0” x 2.9”)
Weight		547 g (1.20 lb)
Ingress Protection		IP67
Vandal Resistance		IK10 for metal casing
Regulatory		CE, FCC, RCM, RoHS compliant
Power over Ethernet		
PoE Standard		PoE (IEEE 802.3af Power over Ethernet / PD)
PoE Power Supply Type		End-span
PoE Power Output		Per Port 48V DC, 350mA, Max. 15.4 watts
Web Interface		
Installation Management		Web-based configuration
Maintenance		Firmware upgrade through Web Browser or Utility
Access from Web Browser		Camera Live View, Video Recording, Change Video Quality, Bandwidth Control, Image Snapshot, Picture in Picture, Picture and Picture, Privacy Mask, Tampering Alarm, Text Overlay, Digital PTZ
Language		Arabic / Bulgarian / Czech / Danish / Dutch / English / Finnish / French / German / Greek / Hebrew / Hungarian / Indonesian / Italian /Japanese / Lithuanian / Norwegian / Persian / Polish / Portuguese / Romanian / Russian / Serbian / Simplified Chinese / Slovakian / Slovenian / Spanish / Swedish / Thai / Traditional Chinese / Turkish
Application		
Network Storage		GV-DVR/NVR, GV-Recording Server, GV-VMS
Smart Device Access		GV-Eye for Android smartphone, tablet, iPhone and iPod Touch GV-Eye HD for iPad
Live Viewing		IE, mobile phone
CMS Server support		GV-Control Center, GV-Center V2, GV-Vital Sign Monitor

Note:

1. The signal range and data throughput may vary depending on the network conditions and environmental factors.
2. Specifications are subject to change without notice.

Packing List

1. Target Bullet Camera
2. Sun-Shield Cover
3. Silica Gel Tape x 2
4. Supporting Rack
5. Screw for supporting rack x 3
6. Screw anchor x 3
7. Screw for sun-shield cover
8. Washer
9. Terminal Block
10. Download Guide
11. Warranty Card

Note: The power adapter can be purchased upon request.

Accessories

Model No.	Name	Details
GV-PA191	PoE Adapter 	Dimensions (H x W x D): 43 x 69 x 40 mm (1.69” x 2.72” x 1.57”) Weight: 130 g (0.29 lb)
GV-PoE Switch		The GV-PoE Switch is designed to provide power along with network connection for IP devices. The GV-PoE Switch is available in various models with different numbers and types of ports.
Power Adapter		Contact our sales representatives for the countries and areas supported.