GV-TVD4811 AI 4MP H.265 5x Zoom Super Low Lux WDR Pro IR Vandal Proof IP Dome



- AI deep learning: AI Perimeter Protection & Classification (Human, Vehicle)
- 1/2.7” progressive scan CMOS
- Min. illumination at 0.002 lux
- Triple streams from H.265, H.264 and MJPEG
- Up to 30 fps at 2688 x 1520
- Motorized lens for remote focus / zoom adjustment
- Intelligent IR
- IR distance up to 30 m (100 ft)
- Day and Night function (with removable IR-cut filter)
- Vandal resistance (IK10 for metal casing)
- Ingress protection (IP66)
- 3-axis mechanism (pan / tilt / rotate)
- DC 12V / PoE (IEEE 802.3af)
- Built-in microSD card slot (SD / SDHC / SDXC / UHS-I, Class 10) for local storage
- Two-way audio capable
- Built-in microphone
- Pigtail-free
- Wide Dynamic Range Pro (WDR Pro)
- Defog
- 3D noise reduction
- Motion detection
- Text overlay
- Privacy mask
- Tampering Alarm
- 12 languages supported
- ONVIF (Profile G, S, T, M) conformant

Introduction

GV-TVD4811 is an outdoor camera designed with IK10 vandal resistance and IP66 ingress protection. GV-TVD4811 supports H.265 video codec to achieve a better compression ratio while maintaining high-quality pictures at reduced network bandwidths. The camera is equipped with an automatic IR-cut filter and IR LEDs for day and night surveillance. With 3-axis adjustment (pan, tilt, and rotate), it offers an entry-level surveillance solution with all the essential features and excellent image quality.

Empowered by deep learning algorithms, its AI technology distinguishes humans and vehicles from other moving objects. Integrated with GeoVision Video Management Software (VMS), it supports AI perimeter protection, real-time alerts, event playback, and more.

Deep Learning Function

Face Detection

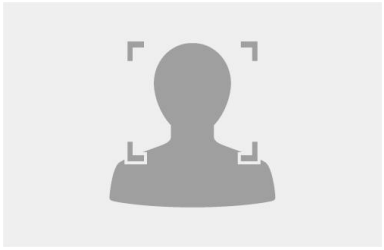

AI Perimeter Protection
(Intrusion, Crossing Line
Entering Area, Leaving Area)

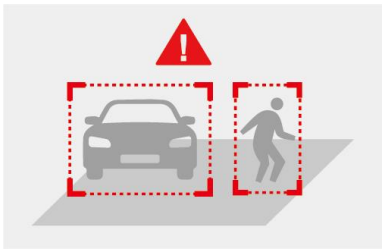

People Counting



Dimensions

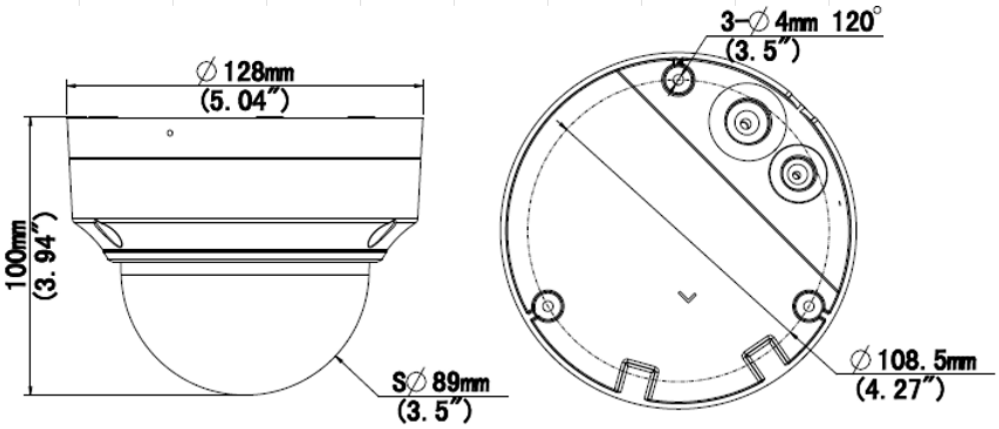

Specifications

Camera		
Image Sensor		1/2.7" progressive scan CMOS
Picture Elements		2688 (H) x 1520 (V)
Minimum Illumination	Color	0.00 2Lux (F1.2, AGC ON)
	IR On	0 Lux
Shutter Speed		Automatic, Manual (1 ~ 1/100000 sec)
White Balance		Automatic, Manual
Gain Control		Automatic, Manual
S/N Ratio		56 dB
WDR Pro		Yes
Dynamic Range		120 dB
Lens		
Megapixel		4 MP
Day/Night		Yes (with removable IR-cut filter)
Focal Length		2.7 ~ 13.5 mm
Lens Type		Motorized varifocal lens
Maximum Aperture		F/1.2
Mount		Ø14 mm
FOV	Horizontal	103.58° ~ 31.05°
	Vertical	54.37° ~ 17.55°
	Diagonal	134.65° ~ 36.63°
Operation	Focus	Automatic / Manual
	Zoom	5x Optical Zoom
	Iris	Fixed
IR LED Quantity		2 IR LEDs
Max. IR Distance		30 m (100 ft)

DORI		Detect	Observe	Recognize	Identify
Lens	2.7 mm	60.8 m (199.5 ft)	24.3 m (79.7 ft)	12.2 m (40 ft)	6.1 m (20 ft)
	13.5 mm	303.8 m (996.7 ft)	121.5 m (398.6 ft)	60.8 m (199.5 ft)	30.4 m (99.7 ft)
Operation					
Video Compression		H.265, H.264, MJPEG			
Video Streaming		Triple streams			
Video Resolution	Main Stream	2688 x 1520 (Default), 2560 x 1440, 2304 x 1296, 1920 x 1080, 1280 x 720			
	Sub Stream	1280 x 720, 720 x 576, 640 x 480, 640 x 360 (Default)			
	Third Stream (Closed by Default)	640 x 360, 352 x 288			
Frame Rate		30 fps at 2688 x 1520, 30 fps at 2560 x 1440, 30 fps at 2304 x1296, 30 fps at 1920x 1080 (60 / 50 Hz) * The frame rate and performance may vary depending on the number of connections and data bitrates (different scenes).			
Maximum Throughput		40 Mbps			
Maximum Streams *When the total bitrate is within the maximum throughput		20			
Video Analytics		Motion Detection, Tampering Alarm, Audio Detection *Tampering alarm and audio detection are only accessible through the camera's Web interface, which can be used to trigger alerts such as e-mail and FTP			
Image Setting		Brightness, Contrast, Saturation, Sharpness, Flicker-less, 3D Noise Reduction, Image Orientation (Flip, Mirror, 0°, 90°, 180°, 270°-including Corridor format).			
Audio Compression		G.711			
Audio Support		Two-way audio (external speaker required)			
Digital I/O	Input	1 Input, dry contact, NO / NC			
	Output	1 Relay Output (1A 30V DC / 0.3A 125V AC)			
Network					
Interface		10 /100 Ethernet			
Protocol		802.1X authentication (EAP-TLS, EAP-MD5), ARP, DHCP, DDNS, DNS, FTP, HTTP, HTTPS, ICMP, IGMP, IPv4, IPv6, NTP, PPPoE, QoS, RTCP, RTP, RTSP, SMTP, SNMP, TCP, UDP, UPnP, ONVIF (Profile G, S, T, M)			
Deep Learning Function					
AI Analytics		- Perimeter Protection (Human & Vehicle classification): Cross Line, Enter Area, Leave Area, Intrusion - Face Detection, People Flow Counting, Crowd Density Monitoring *All Perimeter Protection rules can be enabled together. However, due to hardware resource limitations, only one AI function can be enabled at a time: Perimeter Protection, Face Detection, People Flow Counting, or Crowd Density Monitoring.			
Mechanical					
Camera Angle Adjustment	Pan	0° ~ 356°			
	Tilt	0° ~ 70°			
	Rotate	0° ~ 356°			
Connectors	Power	2-pin terminal block (DC 12 V, 1.25 A), PoE			
	Ethernet	RJ-45			
	Audio	1 built-in microphone 1 In and 1 Out (4-pin terminal block pitch 2.5 mm (0.1")			
	Digital I/O	4-pin terminal block pitch 2.5 mm (0.1")			
	Local Storage	microSD card slot (SD / SDHC / SDXC), up to 512 GB			
General					
Operating Temperature		-30°~ 60°C (-22° ~ 140°F)			
Humidity		0 ~ 95% (no condensation)			
Power Source		12 V DC / PoE (IEEE802.3af)			
Max. Power Consumption		6.5 W			
Dimensions		Ø 128 x 100 mm (Ø 5.04" x 3.94")			
Weight		0.59 kg (1.31 lb)			

Ingress Protection	IP66
Vandal Resistance	IK10 for metal casing
Certification	CE, FCC, LVD, RoHS, UL compliant
Web Interface	
Installation Management	Web-based configuration
Maintenance	Firmware upgrade through Web Browser or Utility
Access from Web Browser	Live View, Video Recording, Change Video Quality, Bandwidth Control, Image Snapshot, Text Overlay, Image Masking
Language	Chinese Traditional, Czech, English, French, German, Hungarian, Italian, Japanese, Polish, Portuguese, Russian, Spanish
Software Applications	
Software Supported	GV-VMS (V17.4.6 / V18.3.2 or later), GV-Control Center (V4.1.1 or later), GV-Edge Recording Manager Windows Version (V2.2.7 or later), GV-Recording Server / Video Gateway (V2.1.0 or later),
Smart Device Access	GV-Eye for iOS and Android (V3.1.0 or later)
Live Viewing	Browser (Edge, IE mode in Edge, Chrome, Firefox), Mobile App

Note:

1. Do not use clothes or any ordinary material to clean the camera cover since they may result in scratches.
2. Specifications are subject to change without notice.

Packing List

1. GV-TVD4811 Dome
2. 2-Pin Power Terminal Block
3. Screw Kit
4. Drill Template Paster
5. Torx Wrench
6. Download Guide
7. Cable Protection Connector
8. Spare Waterproof Rubber Set

Accessories

Model No.	Name		Details
GV-Mount107 (must be used with GV-Mount212P or GV-Mount212-1)	Pendant Bracket		Dimensions: Ø 120 x 334 mm (Ø 4.72” x 13.15”) Weight: 0.74 kg (1.63 lb)
GV-Mount211P	Wall Mount with Junction Box		Dimensions: Ø 233 x126 x 126 mm (Ø 9.2 x 5 x 5”) Weight: 1 kg (2.2 lb)
GV-Mount211-1	Wall Mount with Junction Box		Dimensions: 235 x 126.2 x 128.5 mm (9.3” x 5.0” x 5.1”) Weight: 0.84 kg (1.85 lb)
GV-Mount212P	Junction Box		Dimensions: Ø 126 x 36 mm (Ø 5.0 x 1.4”) Weight: 0.22 kg (0.48 lb)
GV-Mount212-1	Junction Box		Dimensions: Ø 126 x 38.5 mm (Ø 5.0” x 1.5”) Weight: 0.24 kg (0.53 lb)
GV-Mount300-2	Convex Corner Mount		Dimensions: 137 x 233 x 160 mm (5.4” x 9.17” x 6.3”) Weight: 1.65 kg (3.64 lb)
GV-Mount310-2	Concave Corner Mount		Dimensions: 111.2 x 369.9 x 210 mm (2.6” x 11.4” x 6.6”) Weight: 1.65 kg (3.64 lb)

GV-Mount420 (must be used with GV-Mount211P)	Pole Mount Bracket		Dimensions: Ø 120 x 120 x 53.4 mm (Ø 4.7 x 4.7 x 2.1”) Steel Strap Diameter: Ø 67 ~ 127 mm (Ø 2.6” ~ 5”) Weight: 0.45 kg (0.99 lb)
GV-Mount440-1 (must be used with GV-Mount211P or GV-Mount211-1)	Pole Mount Bracket		Dimensions: 136 x 127 x 63.6 mm (5.4” x 5.0” x 2.5”) Weight: 0.34 kg (0.75 lb) Steel Strap Diameter: Ø 67 ~ 127 mm (Ø 2.6” ~ 5”)
GV-Mount704 (must be used with GV-Mount107)	Extension Tube		Dimensions: Ø 3.5 x 10 or 20 or 30 or 50 cm (Ø 1.38 x 3.9 or 7.9 or 11.8 or 19.7”) Weight: 225g or 360g or 500g or 780g (0.5 lb or 0.79 lb or 1.1 lb or 1.72 lb)
GV-PA191	PoE Adapter		GV-PA191 is a Power over Ethernet (PoE) adapter designed to provide power to the IP device through a single Ethernet cable.
GV-PA301	Gigabit PoE Adapter		GV-PA301 is a Gigabit Power over Ethernet (PoE) adapter.
GV-POE Switch		GV-POE Switch is designed to provide power along with network connection for IP devices. The GV-POE Switch is available in various models with different numbers and types of ports.	
Power Adapter		Contact our sales representatives for the countries and areas supported.	

Mounting Type

Wall Mount with Junction Box	Pole Mount
GV-Mount211-1	**GV-Mount211-1 + GV-Mount440-1**
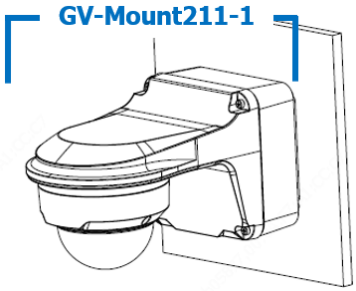	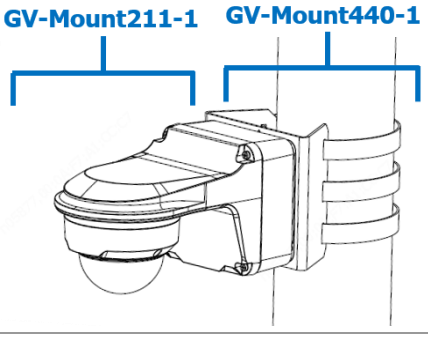

Convex Corner Mount	Concave Corner Mount
GV-Mount300-2	**GV-Mount310-2**
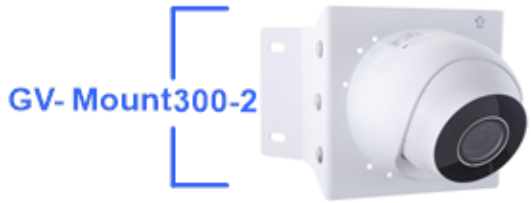	

Convex / Concave Corner Mount	Convex / Concave Corner Mount
GV-Mount211P / 211-1 + GV-Mount300-2 / 310-2	GV-Mount212P / 212-1 + GV-Mount300-2 / 310-2
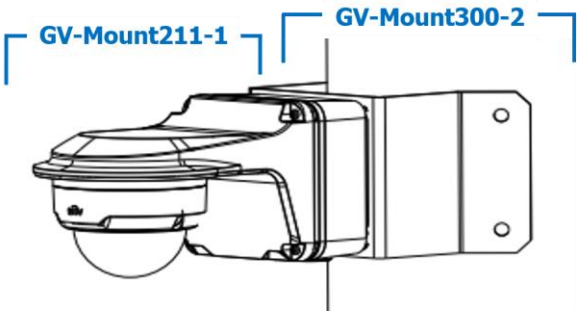	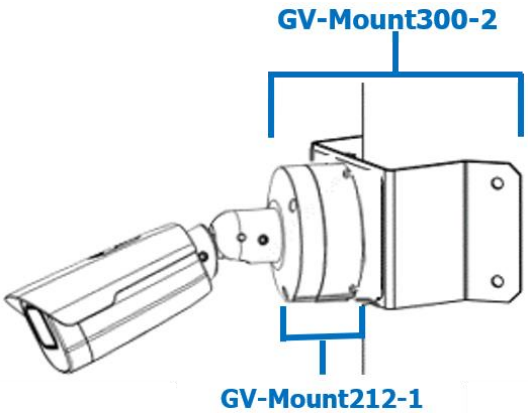

Junction Box Mount	Pendant Mount	Pendant Mount with Extension Tube
GV-Mount212-1	GV-Mount212-1 + GV-Mount107	GV-Mount212-1 + GV-Mount704 + GV-Mount107
