GV-TVD2712 2MP H.265 4.3x Zoom Super Low Lux WDR Pro IR Vandal Proof IP Dome



- 1/2.7" progressive scan super low lux CMOS sensor
- Min. illumination at 0.003 lux
- Dual streams from H.265, H.264 or MJPEG
- Up to 30 fps at 1920 x 1080
- Wide Dynamic Range Pro (WDR Pro)
- Day and Night function (with removable IR-cut filter)
- IR distance up to 40 m (130 ft)
- Motorized varifocal lens for remote focus / zoom adjustment
- Built-in microSD card slot (SD / SDHC / SDXC / UHS-I, Class 10) for local storage
- 3-axis mechanism (pan / tilt / rotate)
- Ingress protection (IP67)
- Vandal Resistance (IK10 for metal casing)
- DC 12V / PoE (IEEE 802.3af)
- Built-in microphone
- Defog
- 3D noise reduction
- Motion detection
- Tampering alarm
- Text overlay
- Privacy mask
- 12 languages supported
- ONVIF (Profile G, S, T) conformant

Introduction

GV-TVD2712 is an outdoor, network camera equipped with an automatic IR-cut filter and IR LEDs for day and night surveillance. The camera supports H.265 video codec to achieve better compression ratio while maintaining high quality pictures at reduced network bandwidths. The camera adheres to IP67 and IK10 standards, and can be powered through PoE.

Active Tampering Alarm

Tampered



Focus Change



Camera Shift



Specifications

Camera					
Image Sensor		1/2.7" progressive scan low lux CMOS			
Picture Elements		1920 (H) x 1080 (V)			
Minimum Illumination	Color	0.003 Lux (F1.6, AGC ON)			
	IR ON	0 Lux			
Shutter Speed		Auto / Manual (1 ~ 1/100,000 sec)			
White Balance		Auto / Manual			
Gain Control		Auto / Manual			
S/N Ratio		52 dB			
WDR Pro		Yes			
Dynamic Range		120 dB			
Lens					
Megapixel		2 MP			
Day / Night		Yes (with removable IR-cut filter)			
Lens Type		Motorized varifocal lens			
Focal Length		2.8 ~ 12 mm			
Maximum Aperture		F1.6			
Mount		Ø 14 mm			
Horizontal FOV		103.6° ~ 33.4°			
Operation	Focus	Automatic / Manual			
	Zoom	4.3x Optical Zoom			
	Iris	Fixed			
IR LED Quantity		2 IR LEDs			
Max. IR Distance		40 m (130 ft)			
DORI		**Detect**	**Observe**	**Recognize**	**Identify**
Lens	2.8 mm	43.4 m (142.5 ft)	17.4 m (57.0 ft)	8.7 m (27.5 ft)	4.3 m (14.3 ft)
	12 mm	186.2 m (610.9 ft)	74.5 m (244.4 ft)	37.2 m (122.2 ft)	18.6 m (61.1 ft)
Operation					
Video Compression		H.265, H.264, MJPEG			
Video Streaming		Dual streams			
Video Resolution	Main Stream	1920 x 1080 (Default), 1280 x 720			
	Sub Stream	1280 x 720, 720 x 576, 640 x 480, 640 x 360 (Default)			
Frame Rate		30 fps at 1920 x 1080, 1280 x 720(60 / 50 Hz) * The frame rate and performance may vary depending on the number of connections and data bitrates (different scenes).			
Maximum throughput		50 Mb			
Maximum stream * When the total bitrate is within the maximum throughput		6			
Video Analytics		Motion Detection, Tampering Alarm, Cross Line, Intrusion, Audio Detection. * Tampering alarm, Cross line, Intrusion, Audio detection are only accessible through the camera's Web interface, which can be used to trigger alerts such as e-mail and FTP			
Image Setting		Brightness, Saturation, Contrast, Sharpness, Flicker-less, Image Orientation (Flip, Mirror, 0°, 90°, 180°, 270°-including Corridor format)			
Audio Compression		G.711U, G.711A			
Audio Support		One-way Audio			
Network					
Interface		10/100 Base-T Ethernet			
Protocol		ARP, DHCP, DDNS, DNS, DynDNS, FTP, HTTP, HTTPS, ICMP, IGMP, IPv4, NTP, ONVIF (Profile G, S, T), QoS, RTCP, RTP, RTSP, SMTP, SNMP, SSL/TLS, TCP, UDP, UPnP			
Mechanical					
Camera Angle Adjustment	Pan	3° ~ 360°			
	Tilt	0° ~ 70°			
	Rotate	3° ~ 360°			
Connectors	Power	DC Jack, PoE			
	Ethernet	RJ-45 connector			

	Audio	Built-in microphone	Yes
		External microphone required	No
		Built-in speaker	No
		External speaker required	No
		* Choose either the built-in or external mic; similarly for speaker.	
		* The Audio In port only support microphones with power supply.	
	Local Storage	Micro SD card slot (SD / SDHC / SDXC / UHS-I, Class 10), up to 256 GB *UHS-II card type is not supported.	
General			
Operating Temperature		-30 °C ~ 60 °C (-22 °F ~ 140 °F)	
Humidity		0% ~ 95% (no condensation)	
Power Source		DC 12V / PoE (IEEE 802.3af)	
Max. Power Consumption		8.0 W	
Dimensions		Ø 128 x 100 mm (Ø 5.0” x 3.9”)	
Weight		0.66 kg (1.46 lb)	
Ingress Protection		IP67	
Vandal Resistance		IK10 (for metal casing)	
Certification		FCC, CE, RoHS, UL compliant	
Web Interface			
Installation Management		Web-based configuration	
Maintenance		Firmware upgrade through Web Browser or GV-IP Device Utility	
Access from Web Browser		Live View, Video Recording, Change Video Quality, Bandwidth Control, Image Snapshot, Defog, Text Overlay, Image Masking	
Language		Czech, English, French, German, Hungarian, Italian, Japanese, Polish, Portuguese, Russian, Spanish, Traditional Chinese	
Applications			
Software Supported		GV-VMS (V17.4.8 or later, patch files required / V18.3.5 / V20.0.0 or later), GV-Control Center (V4.2.1 or later), GV-Recording Server / Video Gateway (V2.1.1 or later), GV-Edge Recording Manager Windows Version (V2.2.8 or later), GV-IP Device Utility (V9.0.1 or later)	
Smart Device Access		GV-Eye for iOS / Android (V3.2.0 or later)	
Live Viewing		Browser (IE, Edge, Chrome, Firefox), Mobile App	

Note:

1. Do not use clothes or any ordinary material to clean the camera cover since they may result in scratches.
2. Specifications are subject to change without notice.

Packing List

1. GV-TVD2712 IR Vandal Proof Dome
2. Waterproof Rubber Set
3. Screw Kit
4. Drill Template Paster
5. Torx Wrench
6. Download Guide

Accessories

Model No.	Name		Details
GV-Mount107 (must be used with GV-Mount212P or GV-Mount212-1)	Pendant Bracket		Dimensions: Ø 120 x 334 mm (Ø 4.72” x 13.15”) Weight: 0.74 kg (1.63 lb)
GV-Mount211P	Wall Mount and Junction Box		Dimensions: Ø 233 x 125 x 125 mm (Ø 9.2” x 4.9” x 4.9”) Weight: 1 kg (2.2 lb)

GV-Mount211-1	Wall Mount and Junction Box		Dimensions: 235 x 126.2 x 128.5 mm (9.3” x 5.0” x 5.1”) Weight: 0.84 kg (1.85 lb)
GV-Mount212P	Junction Box		Dimensions: Ø 126 x 36 mm (Ø 5.0” x 1.4”) Weight: 0.22 kg (0.48 lb)
GV-Mount212-1	Junction Box		Dimensions: Ø 126 x 38.5 mm (Ø 5.0” x 1.5”) Weight: 0.24 kg (0.53 lb)
GV-Mount300-2 (must be used with GV-Mount211P, GV-Mount211-1, GV-Mount212P, or GV-Mount212-1)	Convex Corner Mount		Dimensions: 137 x 233 x 160 mm (5.4” x 9.17” x 6.3”) Weight: 1.65 kg (3.64 lb)
GV-Mount310-2 (must be used with GV-Mount211P, GV-Mount211-1, GV-Mount212P, or GV-Mount212-1)	Concave Corner Mount		Dimensions: 111.2 x 369.9 x 210 mm (2.6” x 11.4” x 6.6”) Weight: 1.65 kg (3.64 lb)
GV-Mount420 (must be used with GV-Mount211P)	Pole Mount Bracket		Dimensions: Ø 120 x 120 x 53.4 mm (Ø 4.7” x 4.7” x 2.1”) Weight: 0.45 kg (0.99 lb) Steel Strap Diameter: Ø 67 ~ 127 mm (Ø 2.6” ~ 5”)
GV-Mount440-1 (must be used with GV-Mount211P or GV-Mount211-1)	Pole Mount Bracket		Dimensions: 136 x 127 x 63.6 mm (5.4” x 5.0” x 2.5”) Weight: 0.34 kg (0.75 lb) Steel Strap Diameter: Ø 67 ~ 127 mm (Ø 2.6” ~ 5”)
GV-Mount704 (must be used with GV-Mount107)	Extension Tube		Dimensions: Ø 3.5 x 10 or 20 or 30 or 50 cm (Ø 1.38 x 3.9 or 7.9 or 11.8 or 19.7”) Weight: 225g or 360g or 500g or 780g (0.5 lb or 0.79 lb or 1.1 lb or 1.72 lb)
GV-PA191	PoE Adapter		GV-PA191 is a Power over Ethernet (PoE) adapter designed to provide power to the IP device through a single Ethernet cable.
GV-PA301	Gigabit PoE Adapter		GV-PA301 is a Gigabit Power over Ethernet (PoE) adapter.
GV-POE Switch		GV-POE Switch is designed to provide power along with network connection for IP devices. The GV-POE Switch is available in various models with different numbers and types of ports.	
Power Adapter		Contact our sales representatives for the countries and areas supported.	

Dimensions

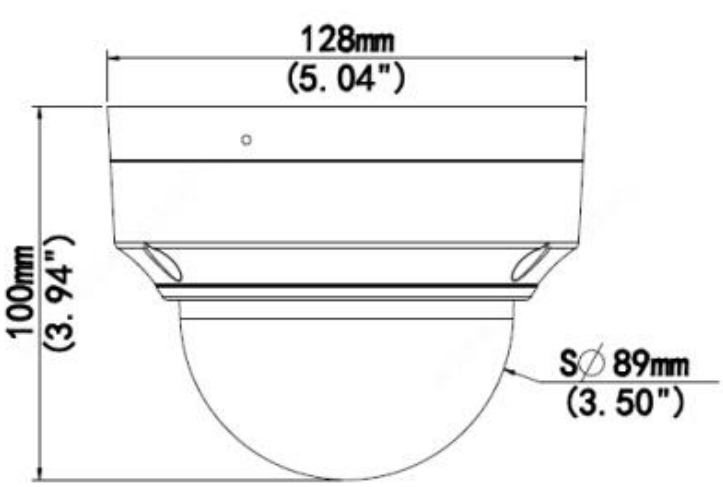

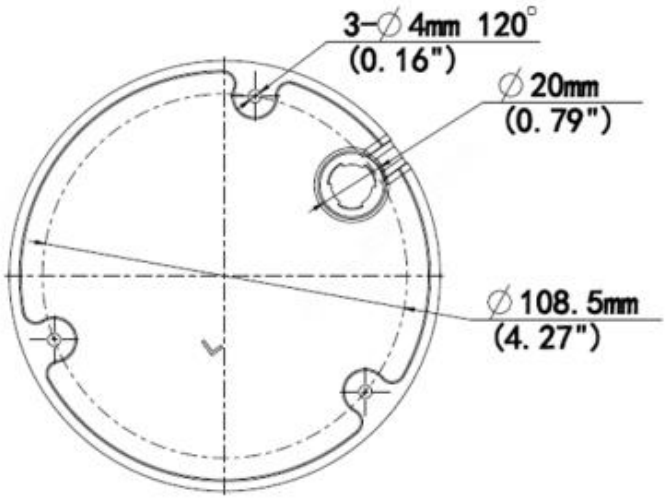

Mounting Type

Pendant Mount		Junction Box Mount	Wall Mount with Junction Box	Pole Mount
GV-Mount107 + GV-Mount212P	GV-Mount107 + GV-Mount704 + GV-Mount212P	GV-Mount212P	GV-Mount211P	GV-Mount211P + GV-Mount420
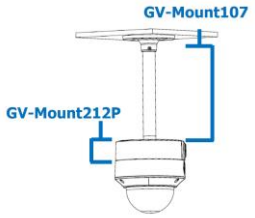	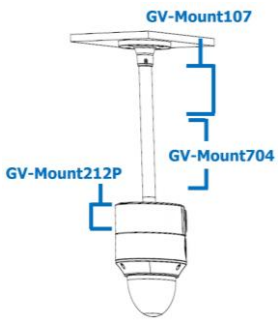		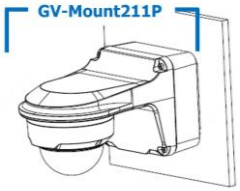	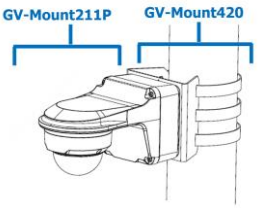

Convex / Concave Corner Mount	Convex / Concave Corner Mount
GV-Mount211P / 211-1 + GV-Mount300-2 / 310-2	GV-Mount212P / 212-1 + GV-Mount300-2 / 310-2
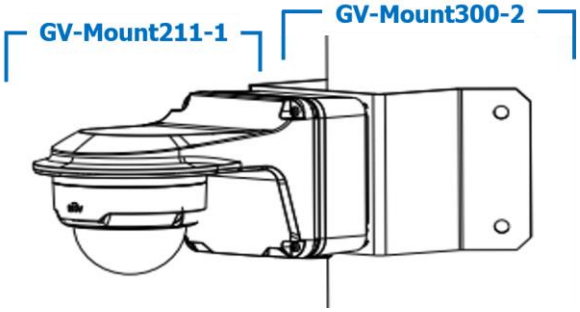	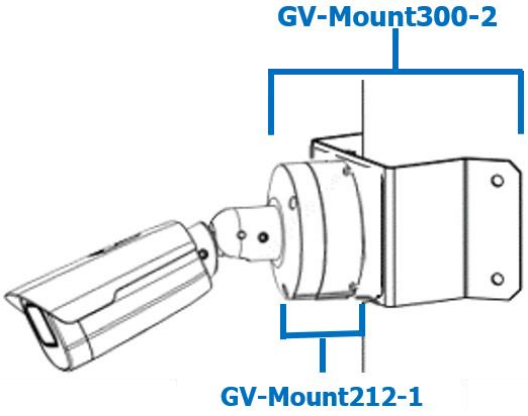

Wall Mount with Junction Box	Pole Mount
GV-Mount211-1	GV-Mount211-1 + GV-Mount440-1
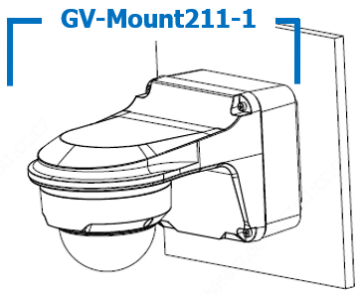	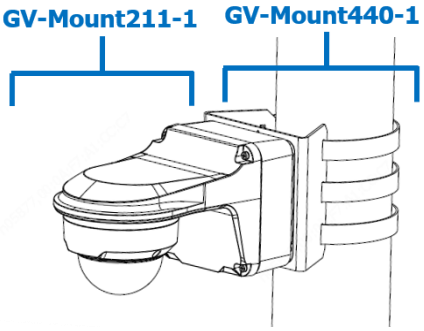

Junction Box Mount	Pendant Mount	Pendant Mount with Extension Tube
GV-Mount212-1	GV-Mount212-1 + GV-Mount107	GV-Mount212-1 + GV-Mount704 + GV-Mount107
