GV-TBL2718 2MP H.265 4.3x Zoom Super Low Lux WDR Pro IR Bullet IP Camera



- 1/2.7" progressive scan super low lux CMOS sensor
- Min. illumination at 0.003 lux
- Dual streams from H.265, H.264 or MJPEG
- Up to 30 fps at 1920 x 1080
- Wide Dynamic Range (WDR Pro)
- Day and night function (with removable IR-cut filter)
- Intelligent IR
- IR distance up to 50 m (165 ft)
- Motorized varifocal lens for remote focus / zoom adjustment
- Ingress protection (IP67)
- DC 12V / PoE (IEEE 802.3af)
- Built-in micro SD card slot (SD / SDHC / SDXC / UHS-I) for local storage, up to 256 GB
- Built-in microphone
- Defog
- 3D noise reduction
- Motion detection
- Tampering alarm
- Text overlay
- Privacy mask
- 12 languages supported
- ONVIF (Profile G, S, T) conformant

Introduction

GV-TBL2718 is an outdoor, network camera equipped with an automatic IR-cut filter and IR LEDs for day and night surveillance. The camera supports H.265 video codec to achieve better compression ratio while maintaining high quality pictures at reduced network bandwidths. The camera adheres to IP67 standard, and can be powered through PoE.

Active Tampering Alarm

Tampered



Focus Change



Camera Shift



Specifications

Camera		
Image Sensor		1/2.7" progressive scan low lux CMOS
Picture Elements		1920 (H) x 1080 (V)
Minimum Illumination	Color	0.003 Lux (F1.6, AGC ON)
	IR ON	0 Lux
Shutter Speed		Auto / Manual (1 ~ 1/100,000 sec)
White Balance		Auto / Manual
Gain Control		Auto / Manual
S/N Ratio		52 dB
WDR Pro		Yes
Dynamic Range		120 dB
Lens		
Megapixel		2 MP
Day / Night		Yes (with removable IR-cut filter)

Lens Type		Motorized varifocal lens			
Focal Length		2.8 ~ 12 mm			
Maximum Aperture		F/1.6			
Mount		Ø 12 mm			
Horizontal FOV		103.6 ~ 33.4°			
Operation	Focus	Auto / Manual			
	Zoom	4.3x Optical Zoom			
	Iris	Fixed			
IR LED Quantity		3 IR LEDs			
Max. IR Distance		50 m (165 ft)			
DORI		**Detect**	**Observe**	**Recognize**	**Identify**
Lens	2.8 mm	43.4 m (142.5 ft)	17.4 m (57 ft)	8.7 m (27.5 ft)	4.3 m (14.3 ft)
	12 mm	186.2 m (610.9 ft)	74.5 m (244.4 ft)	37.2 m (122.2 ft)	18.6 m (61.1 ft)
Operation					
Video Compression		H.265, H.264, MJPEG			
Video Streaming		Dual streams			
Video Resolution	Main Stream	1920 x 1080 (Default), 1280 x 720			
	Sub Stream	1280 x 720, 720 x 576, 640 x 480, 640 x 360 (Default)			
Frame Rate		30 fps at 1920 x 1080, 1280 x 720, 720 x 576, 640 x 480, 640 x 360 (60 / 50 Hz) * The frame rate and performance may vary depending on the number of connections and data bitrates (different scenes).			
Maximum throughput		50 Mb			
Maximum stream * When the total bit rate is within the maximum throughput		6			
Video Analytics		Motion Detection, Tampering Alarm, Audio Detection, Cross Line, Intrusion * Tampering Alarm, Audio Detection, Cross Line, Intrusion are only accessible through the camera's Web interface, which can be used to trigger alerts such as e-mail and FTP.			
Image Setting		Brightness, Saturation, Contrast, Sharpness, Flicker-less, 3D Noise Reduction, Image Orientation (Flip, Mirror, 0°, 90°, 180°, 270°-including Corridor format)			
Audio Compression		G.711U, G.711A			
Audio Support		One-way Audio			
Network					
Interface		10/100 Base-T Ethernet			
Protocol		ARP, DHCP, DDNS, DNS, DynDNS, FTP, HTTP, HTTPS, ICMP, IGMP, IPv4, NTP, ONVIF (Profile G, S, T), QoS, RTCP, RTP, RTSP, SMTP, SNMP, SSL/TLS, TCP, UDP, UPnP			
Mechanical					
Camera Angle Adjustment	Pan	0° ~ 360°			
	Tilt	0° ~ 90°			
	Rotate	0° ~ 360°			
Connectors	Power	DC Jack, PoE			
	Ethernet	RJ-45 connector			
	Audio	Built-in microphone	Yes		
		External microphone required	No		
		Built-in speaker	No		
		External speaker required	No		
		* Choose either the built-in or external mic; similarly for speaker.			
		* The Audio In port only support microphones with power supply.			
	Local Storage	Micro SD card slot (SD/SDHC/SDXC/UHS-I, Class 10), up to 256 GB *UHS-II card types are not supported.			
General					
Operating Temperature		-30°C ~ 60°C (-22°F ~ 140°F)			
Humidity		0% ~ 95% (no condensation)			
Power Source		12V DC, 1.25A / PoE (IEEE 802.3af)			
Max. Power Consumption		9.6 W			
Dimensions		206 × 73 × 73 mm (8.1" × 2.9" × 2.9")			
Weight		0.51 kg (1.12 lb)			
Ingress Protection		IP67			

Certification	FCC, CE, RoHS, UL compliant
Web Interface	
Installation Management	Web-based configuration
Maintenance	Firmware upgrade through Web Browser or GV-IP Device Utility
Access from Web Browser	Live View, Video Recording, Change Video Quality, Bandwidth Control, Image Snapshot, Defog, Text Overlay, Image Masking
Language	Czech, English, French, German, Hungarian, Italian, Japanese, Polish, Portuguese, Russian, Spanish, Traditional Chinese
Applications	
Software Supported	GV-VMS (V17.4.8 or later, patch files required / V18.3.5 / V20.0.0 or later), GV-Control Center (V4.2.1 or later), GV-Recording Server / Video Gateway (V2.1.1 or later), GV-Edge Recording Manager Windows Version (V2.2.8 or later), GV-IP Device Utility (V9.0.1 or later)
Smart Device Access	GV-Eye for iOS / Android (V3.2.0 or later)
Live Viewing	Browser (IE, Edge, Chrome, Firefox), Mobile App

Note:

1. Do not use clothes or any ordinary material to clean the camera cover since they may result in scratches.
2. Specifications are subject to change without notice.

Packing List

1. GV-TBL2718 Bullet
2. Waterproof Rubber Set
3. Screw Kit
4. Drill Template Paster
5. Torx Wrench
6. Download Guide

Accessories

Model No.	Name		Details
GV-Mount300-2 (must be used with GV-Mount504)	Convex Corner Mount		Dimensions: 137 x 233 x 160 mm (5.4” x 9.17” x 6.3”) Weight: 1.65 kg (3.64 lb)
GV-Mount310-2 (must be used with GV-Mount504)	Concave Corner Mount		Dimensions: 111.2 x 369.9 x 210 mm (2.6” x 11.4” x 6.6”) Weight: 1.65 kg (3.64 lb)
GV-Mount440 (must be used with GV-Mount504)	Pole Mount		Dimensions: 127 x 136 x 62.5 mm (5” x 5.35” x 2.46”) Weight: 0.34 kg (0.75lb) Steel Strap Diameter: Ø 67 ~ 127 mm (Ø 2.6” ~ 5”)
GV-Mount440-1 (must be used with GV-Mount504)	Pole Mount Bracket		Dimensions: 136 x 127 x 63.6 mm (5.4” x 5.0” x 2.5”) Weight: 0.34 kg (0.75 lb) Steel Strap Diameter: Ø 67 ~ 127 mm (Ø 2.6” ~ 5”)
GV-Mount504	Wall Mount Bracket		Dimensions: Ø 104.4 x 54.5 mm (Ø 4.11” x 2.15”) Weight: 0.36 kg (0.79 lb)

GV-Mount924 (for standard US single and double gang boxes only)	Power Box Mount	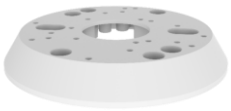	Dimensions: Ø 128 x 18.5 mm (Ø 5” x 0.7”) Weight: 0.15 kg (0.33 lb)
GV-PA301	Gigabit PoE Adapter		GV-PA301 is a Gigabit Power over Ethernet (PoE) adapter.
GV-PA191	Power over Ethernet (PoE) Adapter		GV-PA191 is a Power over Ethernet (PoE) adapter designed to provide power to the IP device through a single Ethernet cable.
GV-POE Switch		GV-POE Switch is designed to provide power along with network connection for IP devices. GV-POE Switch is available in various models with different numbers and types of ports.	
Power Adapter		Contact our sales representatives for the countries and areas supported.	

Dimensions

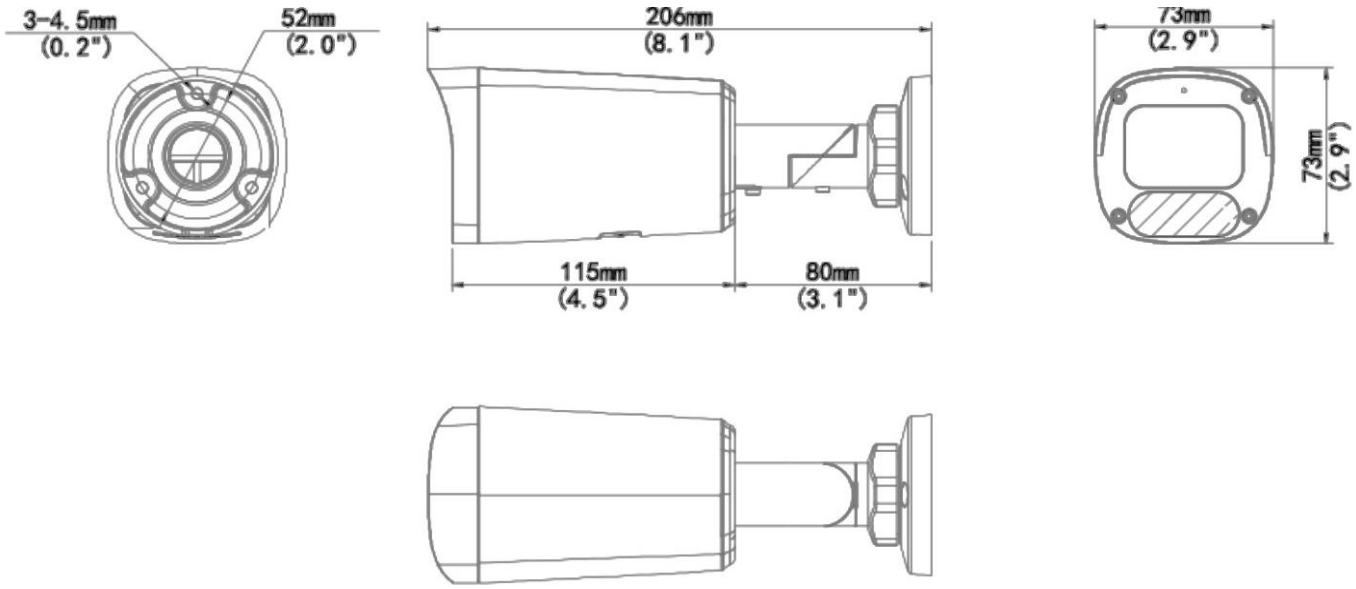

Mounting Type

Wall Bracket Mount	Pole Mount
GV-Mount504	GV-Mount504 + GV-Mount440 / 440-1
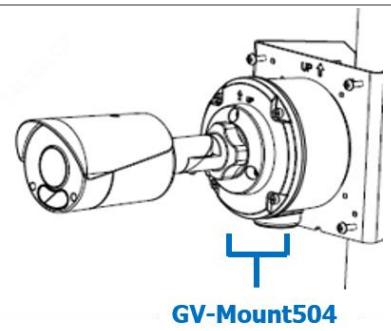	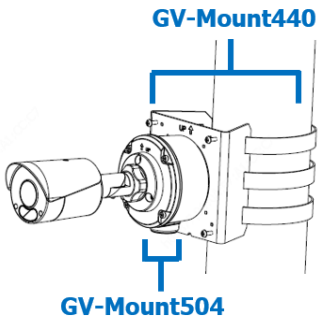

Convex / Concave Corner Mount	Power Box Mount
GV-Mount504 + GV-Mount300-2 / 310-2	GV-Mount924
