GV-MFD5301 5MP H.264 WDR Mini Fixed Dome





- 5 Megapixel Progressive Scan CMOS
- Dual streams from H.264 and MJPEG
- Up to 10 fps at 2560 x 1920
- Day and night function (electronic)
- USB slot for GV-WiFi Adapter or USB hard drive
- Built-in micro SD card slot (SD/SDHC) for local storage
- Recording assigned by GV-Edge Recording Manager (Windows, Mac version)
- Active Tampering alarm
- Wide Dynamic Range (WDR)
- Two-way audio
- 2D noise reduction
- Defog
- Motion detection
- Privacy mask
- IP address filtering
- iPhone, iPad, Android
- DC 5V / PoE (IEEE 802.3af)
- Megapixel lens
- Supports iPhone, iPad, Android & 3GPP
- 31 languages on Web interface
- ONVIF (Profile S) conformant
- More Storage Option - NAS

* No Memory card slot & local storage function for Argentina.

Introduction

The GV-MFD5301 Series offers an indoor, fixed, mini-sized network camera with different lens options. The camera can process scenes with contrasting intensity of lights and produce clear image using the built-in WDR. The camera is equipped with a USB port which supports wireless connection through GV-WiFi Adapter (optional) or external storage using a USB hard drive.

Active Tampering Alarm

Tampered



Focus Change



Camera Shift



Models

Models	Iris	Focal Length (mm)	Maximum Aperture	Image Format
MFD5301-0F	Fixed	2.8 mm	F/2.0	1/3”
MFD5301-2F		8 mm	F/1.6	
MFD5301-3F		12 mm	F/1.6	
MFD5301-5F		3.8 mm	F/1.8	

Dimensions

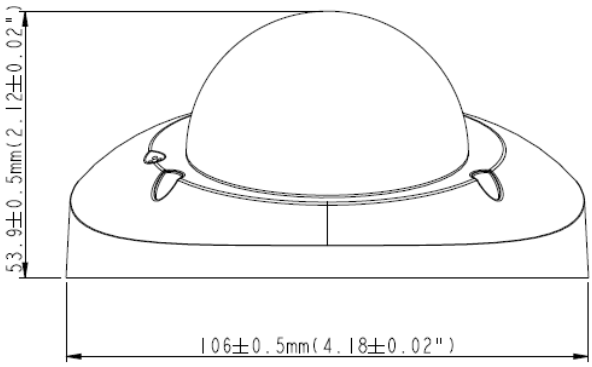

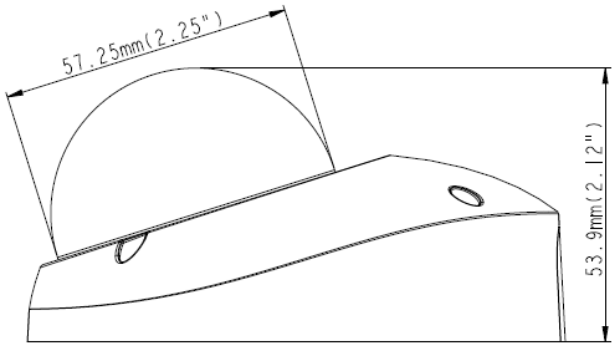

Specifications

Camera		GV-MFD5301-0F	GV-MFD5301-2F	GV-MFD5301-3F	GV-MFD5301-5F
Image Sensor		1/2.5" progressive scan CMOS			
Picture Elements		2560 (H) x 1920 (V)			
Minimum Illumination	Color	0.15 Lux			
	B/W	0.10 Lux			
Shutter Speed		Automatic, Manual (1/5 ~ 1/8000 sec.)			
White Balance		Automatic, Manual (2800K ~ 8500K)			
Gain Control		Automatic			
S/N Ratio		55 dB			
WDR		Yes			
Lens					
Megapixel		Yes			
Day/Night		Yes (Electronic)			
Iris		Fixed			
Focal Length		2.8 mm	8 mm	12 mm	3.8 mm
Maximum Aperture		F/2.0	F/1.6	F/1.6	F/1.8
Mount		M12, Pitch 0.5 mm			
Image Format		1/3"			
Horizontal FOV		103°	41°	26°	76°
Operation	Focus	Fixed			
	Zoom	Fixed			
	Iris	Fixed			
Operation					
Video Compression		H.264, MJPEG			
Video Streaming		Dual streams from H.264 and MJPEG			
Frame Rate		10 fps at 2560 x 1920 (60/50 Hz) * The frame rate and the performance may vary depending on the number of connections and data bitrates (different scenes).			
Image Setting		Brightness, Contrast, Saturation, Sharpness, Gamma, White Balance, Flicker-less 50/60 Hz, Image Orientation, Shutter Speed, Backlight Compensation, D/N Sensitivity, WDR, Defog, Denoise, Metering			
Audio Compression		G.711			
Audio Support		Two-way Audio (external speaker required)			
Sensor Input		No			
Alarm Output		No			
Video Resolution					
Main Stream	4:3	2560 x 1920 (Default), 2048 x 1536, 1600 x 1200, 1280 x 960, 640 x 480, 320 x 240			
	16:9	1920 x 1080, 1280 x 720, 640 x 360, 448 x 252			
	5:4	1280 x 1024, 640 x 512, 320 x 256			

Video Resolution		
Sub Stream	4:3	640 x 480, 320 x 240 (Default)
	16:9	640 x 360, 448 x 252
	5:4	640 x 512, 320 x 256
Network		
Interface		10/100M Ethernet
Ethernet Protocol		DHCP, DNS, DynDNS, FTP, HTTP, HTTPS, ICMP, IPv4, NTP, ONVIF (Profile S), QoS (DSCP), RTCP, RTSP, SNMP, SMTP, SSL, TCP/IP, UDP, UPnP, 3GPP/ISMA
Mechanical		
Temperature Detector		Yes
Camera Angle Adjustment	Pan	-45° ~ 45°
	Tilt	0° ~ 90°
Connectors	Power	2-pin terminal block, PoE
	Ethernet	Ethernet (10/100 Base-T), RJ-45
	Audio	1 In (Built-in microphone), 1 Out (RCA female for speaker)
	USB	GV-WiFi Adapter or USB hard drive
	Local Storage	Micro SD card slot (SD/SDHC, SD version 2.0 only, Class 10) * **SDXC** and **UHS-I** card types are not supported.
LED Indicator		4 LEDs: Link, ACT, Power, Status
General		
Camera Housing		black, white
Environment Temperature		0 °C ~ 50 °C (32 °F ~ 122 °F)
Humidity		10% to 90% (no condensation)
Power Source		5V DC/PoE (IEEE 802.3af)
Max. Power Consumption		6 W
Dimension		ø 106 x 53.9 mm (4.2'' x 2.1")
Weight		280 g (0.62 lb)
Regulatory		CE, FCC, RCM, RoHS compliant
Power over Ethernet		
PoE Standard		PoE (IEEE 802.3af Power over Ethernet / PD)
PoE Power Supply Type		End-Span
PoE Power Output		Per Port 48V DC, 350mA. Max. 15.4 watts
Web Interface		
Installation Management		Web-based configuration
Maintenance		Firmware upgrade through Web Browser or Utility
Access from Web Browser		Camera Live View, Video Recording, Change Video Quality, Bandwidth Control, Image Snapshot, Audio, Picture in Picture, Picture and Picture, Privacy Mask, Text Overlay, Digital PTZ
Language		Arabic / Bulgarian / Czech / Danish / Dutch / English / Finnish / French / German / Greek / Hebrew / Hungarian / Indonesian / Italian /Japanese / Lithuanian / Norwegian / Persian / Polish / Portuguese / Romanian / Russian / Serbian / Simplified Chinese / Slovakian / Slovenian / Spanish / Swedish / Thai / Traditional Chinese / Turkish
Applications		
Network Storage		GV-VMS / DVR / NVR, GV-Backup Center, GV-Recording Server
Smart Device Access		GV-Eye for iOS and Android
Live Viewing		IE, Mobile App
CMS Server support		GV-Control Center, GV-Center V2, GV-Vital Sign Monitor

Note:

1. Mind the following limitations and requirements for the USB port:
   - The USB hard drive must be of 2.5'' or 3.5'', version 2.0 or above
   - The USB hard drive's storage capacity must not exceed 2TB
   - USB flash drives and USB hubs are not supported
   - External power supply is required for the USB hard drive
   - To connect the GV-WiFi Adapter, make sure it is connected before the camera is powered on.

2. Mind the following when using an inserted memory card for recording:
   - Recorded data on the memory card can be damaged or lost if the data are accessed while the camera is under physical shock, power interruption, memory card detachment or when the memory card reaches the end of its lifespan. No guarantee is provided for such causes.
   - The stored data can be lost if the memory card is not accessed for a long period of time. Back up your data periodically if you seldom access the memory card.
   - Memory cards are expendable and their durability varies according to the conditions of the installed site and how they are used. Back up your data regularly and replace the memory card annually.
   - To avoid power outage, it is highly suggested to apply a battery backup (UPS).
   - For better performance, it is highly suggested to use Micro SD card of MLC NAND flash, Class 10.
   - Replace the memory card when its read/write speed is lower than 6 MB/s or when the memory card is frequently undetected by the camera.
3. Specifications are subject to change without notice.

Packing List

1. Mini Fixed Dome
2. Torx Wrench
3. Self Tapping Screw x 2
4. Screw Anchor x 2
5. Cable stopper x 1
6. Short-Body RJ-45 Plug
7. USB / Audio Y-cable
8. Power Adapter
9. Download Guide
10. Warranty Card

Note: The power adapter can be excluded upon request.

Accessories

Model No./Name	Details
GV-Mount909 Wall Mount Bracket 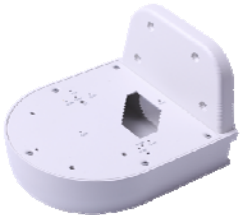	Dimensions: 170 x 150 x 110 mm (6.7'' x 5.9" x 4.3'') Weight: 610 g (1.34 lb)
GV-Mount910 Power Box Mount Bracket 	Dimensions: 112 x 98 x 7.5 mm (4.4'' x 3.9'' x 0.3'') Weight: 105 g (0.23 lb)
GV-Mount913 Power Box Mount Bracket 	Dimensions: Ø 146 x 7.5 mm (Ø 5.7'' x 0.3'') Weight: 180 g (0.4 lb)

Model No./Name	Details
GV-Mount918 Wall Mount Bracket for MFD/MDR/EFD/EDR 	Dimensions: Ø 145 x 117 x 96 mm (Ø 5.71 x4.60 x 3.78") Weight: 350 g (0.77 lb)
GV-PA191 PoE Adapter 	Dimensions (H x W x D): 43 x 69 x 40 mm (1.69” x 2.72” x 1.57”) Weight: 130 g (0.29 lb)
Power Adapter	Contact our sales representative for the countries and areas supported.
GV-POE Switch	The GV-POE Switch is designed to provide power along with network connection for IP devices. The GV-POE Switch is available in various models with different numbers and types of ports.