GV-BL3411 3MP H.264 3x zoom WDR Pro IR Bullet IP Camera



- 1/3.2” progressive scan CMOS
- Dual streams from H.264 and MJPEG
- Up to 20 fps at 2048 x 1536
- Intelligent IR
- IR distance up to 50 m (164 ft)
- P-Iris for auto iris adjustment
- Motorized varifocal lens for remote focus/zoom adjustment
- Vandal resistance (IK10 for metal casing)
- Ingress protection (IP67)
- Tolerant to extreme temperatures (-20°C ~ 50°C/-4°F ~ 122°F)
- One alarm input and sensor output
- Built-in micro SD card slot (SD/SDHC) for local storage
- Recording assigned by GV-Edge Recording Manager (Windows, Mac version)
- Two-way audio
- Wide Dynamic Range Pro (WDR Pro)
- 2D noise reduction
- Defog
- Motion detection
- Tampering alarm
- Privacy mask
- IP address filtering
- DC 12V / AC 24V / PoE (IEEE 802.3af)
- Removable IR-cut filter for Day/Night function
- Supports iPhone, iPad, Android & 3GPP
- 31 languages on Web interface
- ONVIF (Profile S) conformant
- More storage option –NAS

* No Memory Card Slot & local storage function for Argentina.

Introduction

GV-BL3411 is an outdoor Bullet Camera that can produce clear image for scenes containing contrasting intensity of lights using its WDR Pro sensor. With the motorized focus/zoom, users can remotely adjust the focus and zoom from the Web interface. The camera is also equipped with a P-Iris, which allows for precise control of exposure, producing images with better clarity and contrast.

Active Tampering Alarm

Tampered



Focus Change



Camera Shift



Dimensions

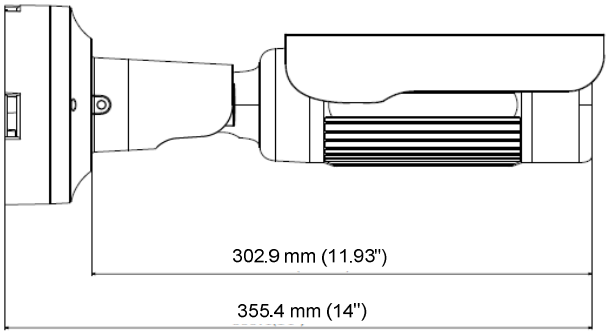

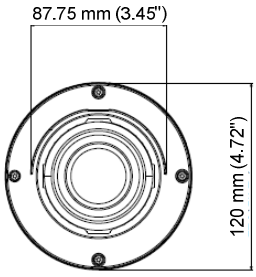

Specifications

Camera		
Image Sensor		1/3.2" progressive scan CMOS
Picture Elements		2048 (H) x 1536 (V)
Minimum Illumination	Color	0.08 Lux
	B/W	0.05 Lux
	IR ON	0 Lux
Shutter Speed		Automatic, manual (1/5 ~ 1/8000 sec.)
White Balance		Automatic, manual (2800K ~ 8500K)
Gain Control		Automatic
S/N Ratio		47 dB
BLC		Yes
WDR Pro		Yes (with WDR sensor)
Dynamic Range		Up to 100 dB
Lens		
Megapixel		Yes
Focal Length		3 ~ 9 mm
Day/Night		Yes (with removable IR-cut filter)
Lens Type		Motorized varifocal lens
Maximum Aperture		F/1.2
Mount		Ø 14 mm
Image Format		1/2.7"
Horizontal FOV		86° ~ 31°
Operation	Focus	Auto focus
	Zoom	3X optical zoom
	Iris	P-Iris
IR LED Quantity		16 IR LEDs
Max. IR Distance		50 m (164 ft)
Operation		
Video Compression		H.264, MJPEG
Video Stream		Dual streams from H.264 or MJPEG
Frame Rate		20 fps at 2048 x 1536 (60/50 Hz) *The frame rate and the performance may vary depending on the number of connections and data bitrates (different scenes).
Image Setting		Brightness, Contrast, Saturation, Sharpness, Gamma, White Balance, Flicker-less, Image Orientation, Shutter Speed, D/N Sensitivity, Backlight Compensation, WDR, Defog, Zoom, Focus Change, Denoise, Metering
Audio Compression		G.711
Audio Support		Two-way Audio (external microphone and speaker required)
Sensor Input		1 Input (dry contact)
Alarm Output		1 Digital output (200 mA 5V DC)
Video Resolution		
Main Stream	4 : 3	2048 x 1536 (Default), 1600 x 1200, 1280 x 960, 640 x 480, 320 x 240
	16 : 9	1920 x 1080, 1280 x 720, 640 x 360, 448 x 252
	5 : 4	1280 x 1024, 640 x 512, 320 x 256
Sub Stream	4 : 3	640 x 480, 320 x 240 (Default)
	16 : 9	640 x 360, 448 x 252

	5 : 4	640 x 512, 320 x 256
Network		
Interface		10/100 Ethernet
Protocol		DHCP, DNS, DynDNS, FTP, HTTP, HTTPS, ICMP, IPv4, NTP, ONVIF (Profile S), QoS (DSCP), RTCP, RTSP, SNMP, SMTP, SSL, TCP/IP, UDP, UPnP, 3GPP/ISMA
Mechanical		
Temperature Detector		Yes
Camera Angle Adjustment	Pan	0° ~ 360°
	Tilt	90° ~ 180°
	Rotate	0° ~ 360°
Mechanical		
Connectors	Power	2-pin terminal block (DC 12V, 1.25A), PoE
	Ethernet	Ethernet (10/100 Base-T), RJ-45 Cable
	Audio	1 In (3.5 mm / 0.14" phone jack for microphone) 1 Out (3.5 mm / 0.14" Stereo phone jack for speaker)
	Digital I/O	3-pin terminal block, pitch 2.5 mm / 0.1"
	Local Storage	Micro SD card slot (SD/SDHC, SD version 2.0 only, Class 10) *__SDXC__ and __UHS-I__ card types are not supported.
General		
Environment Temperature		-20°C ~ 50°C (-4 °F ~ 122 °F)
Humidity		10% to 90% (no condensation)
Power Source		12V DC / 24V AC / PoE (IEEE 802.3af)
Max. Power Consumption		12.48 W
Dimensions		355.4 x 87.75 x 120 mm (14" x 3.45" x 4.72")
Weight		1.96 kg (4.32 lb)
Ingress Protection		IP67
Vandal Resistance		IK10 for metal casing
Regulatory		CE, FCC, RCM, RoHS compliant
Power over Ethernet		
PoE Standard		PoE (IEEE 802.3af Power over Ethernet / PD)
PoE Power Supply Type		End-span
PoE Power Output		Per Port 48V DC, 350 mA, Max. 15.4 watts
Web Interface		
Installation Management		Web-based configuration
Maintenance		Firmware upgrade through Web Browser or Utility
Access from Web Browser		Camera Live View, Video Recording, Change Video Quality, Bandwidth Control, Image Snapshot, Digital I/O Control, Audio, Picture in Picture, Picture and Picture, Privacy Mask, Visual Automation, Tampering Alarm, Text Overlay, Digital PTZ
Language		Arabic / Bulgarian / Czech / Danish / Dutch / English / Finnish / French / German / Greek / Hebrew / Hungarian / Indonesian / Italian /Japanese / Lithuanian / Norwegian / Persian / Polish / Portuguese / Romanian / Russian / Serbian / Simplified Chinese / Slovakian / Slovenian / Spanish / Swedish / Thai / Traditional Chinese / Turkish
Application		
Network Storage		GV-VMS / DVR / NVR, GV-Backup Center, GV-Recording Server
Smart Device Access		GV-Eye for iOS and Android
Live Viewing		IE, Mobile app
CMS Server support		GV-Control Center, GV-Center V2, GV-Vital Sign Monitor

Note:

1. Mind the following when using an inserted memory card for recording:
   - Recorded data on the memory card can be damaged or lost if the data are accessed while the camera is under physical shock, power interruption, memory card detachment or when the memory card reaches the end of its lifespan. No guarantee is provided for such causes.
   - The stored data can be lost if the memory card is not accessed for a long period of time. Back up your data periodically if you seldom access the memory card.
   - Memory cards are expendable and their durability varies according to the conditions of the installed site and how they are used. Back up your data regularly and replace the memory card annually.
   - To avoid power outage, it is highly suggested to apply a battery backup (UPS).
   - For better performance, it is highly suggested to use Micro SD card of MLC NAND flash, Class 10.
   - Replace the memory card when its read/write speed is lower than 6 MB/s or when the memory card is frequently undetected by the camera.
2. Specifications are subject to change without prior notice.

Packing List

1. Bullet Camera
2. Self Tapping Screw x 3
3. Plastic Screw Anchor x 3
4. Torx Wrench x 3
5. Sun-Shield Cover Kit (1 Sun-Shield Cover, 2 Philips Head Screws, 2 Plastic Screw Spacers and 2 Hexagon Screws included)
6. Silica Gel Bag x 2
7. 2-Pin Terminal Block
8. 3-Pin Terminal Block
9. Power Adapter
10. Installation Sticker
11. Ruler
12. Stand Kit (Conduit Converter, PG21 Conduit Connector, RJ-45 Connector, M3 Screw x 2, Cable Tie)
13. Mounting Kit (M4 Screw x 3, Nut x 3, Plate x 3)
14. Download Guide
15. Warranty Card

Note: The power adapter can be excluded upon request.

Accessories

Model No.	Name		Details
GV-Mount300-1	Convex Corner Adapter Kit	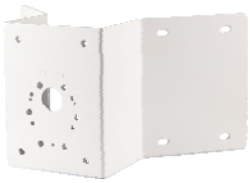	Dimensions: 238.6 x 395.2 x 210 mm (9.4'' x 15.5" x 8.2") Weight: 4.27 kg (9.41 lb)
GV-Mount310-1	Concave Corner Adapter Kit		Dimensions: 111.2 x 369.9 x 210 mm (4.37'' x 14.5" x 8.2") Weight: 2.96 kg (6.53 lb)
GV-Mount400-1	Pole Mount Bracket Kit (Ø 4" ~ 6")		Dimensions: Bracket: 68.4 x 240 x 163 mm (2.69" x 9.44'' x 6.41") Weight: 1.70 kg (3.75 lb) Steel Strap Diameter: Ø 4" ~ 6"
GV-Mount410-1	Pole Mount Bracket Kit (Ø 6" ~ 7.5")		Dimensions: Bracket: 68.4 x 240 x 163 mm (2.69" x 9.44'' x 6.41") Weight: 1.70 kg (3.75 lb) Steel Strap Diameter: Ø 6" ~ 7.5"
GV-PA191 PoE Adapter	Power over Ethernet (PoE) Adapter		The GV-PA191 is a Power over Ethernet (PoE) adapter designed to provide power to the IP device through a single Ethernet cable.
GV-Relay V2	GV-Relay V2		The GV-Relay V2 is designed to expand the voltage load of GV IP devices. It provides 4 relay outputs, and each can be set as normally open (NO) or normally closed (NC) independently as per your requirement.
GV-POE Switch			The GV-POE Switch is designed to provide power along with network connection for IP devices. The GV-POE Switch is available in various models with different numbers and types of ports.
Power Adapter			Contact our sales representatives for the countries and areas supported.