GV-ADR4701 4MP H.265 Super Low Lux WDR IR Mini Fixed Rugged IP Dome



- 1/3" progressive scan super low lux CMOS sensor
- Min. illumination at 0.02 lux
- Triple streams from H.265, H.264 or MJPEG
- Up to 20 fps at 2592 x 1520, 25 fps at 2560 x 1440, 30 fps at 2048 x 1520
- Intelligent IR
- IR distance up to 30 m (100 ft)
- Day and night function (with removable IR-cut filter)
- Ingress protection (IP66)
- Vandal Resistance (IK10 for metal casing)
- DC 12V / PoE (IEEE 802.3af)
- Wide Dynamic Range (WDR)
- Defog
- 3D noise reduction
- Motion detection
- Text overlay
- Privacy mask
- ONVIF (Profile S, T) conformant

Introduction

The Mini Fixed Rugged IP Dome is an outdoor, fixed, network camera equipped with an automatic IR-cut filter and an IR LED for day and night surveillance. The camera supports H.265 video codec to achieve better compression ratio while maintaining high quality pictures at reduced network bandwidths. The camera adheres to IP66 and IK10 standards, and can be powered through PoE.

Dimensions

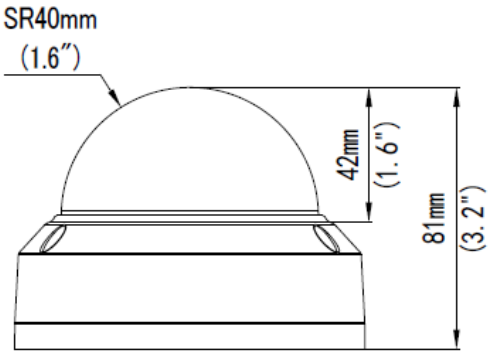

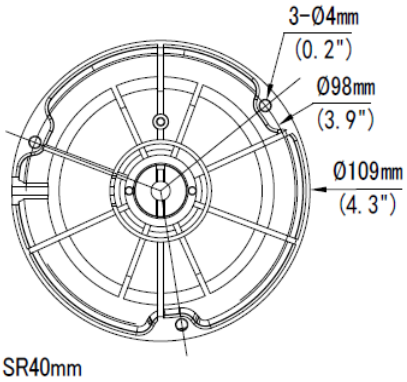

Specifications

Camera		
Image Sensor		1/3" progressive scan super low lux CMOS
Picture Elements		2592(H) x 1520 (V)
Minimum Illumination	Color	0.02 Lux (F1.8, AGC ON)
	IR ON	0 Lux
Shutter Speed		Auto / Manual (1/6 ~ 1/100000 sec)
White Balance		Auto / Manual
Gain Control		Auto / Manual
S/N Ratio		52 dB
WDR		Yes
Dynamic Range		Up to 72 dB
Lens		
Megapixel		4 MP
Day / Night		Yes (with removable IR-cut filter)
Lens Type		Fixed
Focal Length		2.8 mm
Maximum Aperture		F/1.8
Mount		M12
Horizontal FOV		101°
Operation	Focus	Fixed
	Zoom	Fixed
	Iris	Fixed
IR LED Quantity		1 IR LED
Max. IR Distance		30 m (100 ft)
Operation		
Video Compression		H.265, H.264, MJPEG
Video Streaming		Triple streams from H.265, H.264 or MJPEG
Video Resolution	Main Stream	2592 x 1520, 2560 x 1440 (Default), 2048 x 1520, 1920 x 1080
	Sub Stream	1920 x 1080, 1280 x 720, 720 x 576, 704 x 288, 640 x 360 (Default), 352 x 288
	Third Stream (Closed by Default)	720 x 576, 704 x 288, 640 x 360, 352 x 288
Frame Rate		20 fps at 2592 x 1520, 25 fps at 2560 x 1440, 30 fps at 2048 x 1520 (60 / 50 Hz) * The frame rate and performance may vary depending on the number of connections and data bitrates (different scenes).
Image Setting		Brightness, Contrast, Saturation, Sharpness, Flicker-less, Image Orientation (Flip, Mirror, 0°, 90°, 180°, 270°-including Corridor format)
Network		
Interface		10/100 Ethernet
Protocol		802.1x, ARP, DHCP, DDNS, DNS, DynDNS, FTP, HTTP, HTTPS, ICMP, IGMP, IPv4, NTP, PPPoE, QoS, RTCP, RTP, RTSP, SMTP, SNMP, TCP, UDP, UPnP, ONVIF (Profile S, T)
Mechanical		
Temperature Detector		No
Camera Angle Adjustment	Pan	0° ~ 360°
	Tilt	0° ~ 68°
Connectors	Power	DC Jack (DC 12V, 1.25A), PoE
	Ethernet	RJ-45 connector
General		
Operating Temperature		-30°C ~ 60°C (-22°F ~ 140°F)
Humidity		0% ~ 95% (no condensation)
Power Source		12 V DC / PoE (IEEE802.3af)
Max. Power Consumption		5 W
Dimensions		Ø 109 x 81 mm (Ø 4.3” x 3.2”)
Weight		0.3 kg (0.66 lb)
Ingress Protection		IP66
Vandal Resistance		IK10 (for metal casing)

Regulatory	FCC, CE, RoHS compliant
Web Interface	
Installation Management	Web-based configuration
Maintenance	Firmware upgrade through Web Browser or Utility
Access from Web Browser	Live View, Video Recording, Change Video Quality, Bandwidth Control, Image Snapshot, Defog, Text Overlay, Image Masking
Language	Czech, English, French, German, Hungarian, Italian, Japanese, Polish, Portuguese, Russian, Spanish, Traditional Chinese
Applications	
Software Supported	GV-DVR / NVR (V8.7.4.0), GV-VMS (V16.11.0.0), GV-Control Center (V3.5.0.0), GV-Recording Server / Video Gateway (V1.4.0.0), GV-Redundant / Failover Server (V1.1.0.0)
Smart Device Access	GV-Eye for iOS and Android
Live Viewing	Browser (IE, Edge, Chrome, Firefox, Safari), Mobile App

Note:

1. It is required to apply patch files to all the supported software.
2. Do not use clothes or any ordinary material to clean the camera cover since they may result in scratches.
3. Specifications are subject to change without notice.

Packing List

1. GV-ADR4701 IR Mini Fixed Rugged IP Dome
2. Waterproof Rubber Set
3. Screw Kit
4. Drill Template Paster
5. Download Guide
6. Warranty Card

Accessories

Model No.	Name		Details
GV-Mount107 (must be used with GV-Mount213)	Pendant Bracket		Dimensions: Ø 120 x 334 mm (Ø 4.72” x 13.15”) Weight: 0.74 kg (1.63 lb)
GV-Mount211P	Wall Mount Bracket		Dimensions: Ø 233 x 126 x 126 mm (Ø 9.2” x 5” x 5”) Weight: 1 kg (2.2 lb)
GV-Mount213	Wall / Ceiling Box Mount		Dimensions: Ø 109 x 39 mm (Ø 4.3” x 1.5”) Weight: 0.2 kg (0.44 lb)
GV-Mount300-2 (must be used with GV-Mount211P or GV-Mount213)	Convex Corner Mount		Dimensions: 137 x 233 x 160 mm (5.4” x 9.17” x 6.3”) Weight: 1.65 kg (3.64 lb)
GV-Mount310-2 (must be used with GV-Mount211P or GV-Mount213)	Concave Corner Mount		Dimensions: 111.2 x 369.9 x 210 mm (2.6” x 11.4” x 6.6”) Weight: 1.65 kg (3.64 lb)

GV-Mount420 (must be used with GV-Mount211P)	Pole Mount Bracket		Dimensions: Ø 120 x 120 x 53.4 mm (Ø 4.7” x 4.7” x 2.1”) Weight: 0.45 kg (0.99 lb) Steel Strap Diameter: Ø 67 ~ 127 mm (Ø 2.6” ~ 5”)

Model No.	Name		Details
GV-Mount704 (must be used with GV-Mount107)	Extension Tube		Dimensions: Ø 3.5 x 10 or 20 or 30 or 50 cm (Ø 1.38 x 3.9 or 7.9 or 11.8 or 19.7”) Weight: 225g or 360g or 500g or 780g (0.5 lb or 0.79 lb or 1.1 lb or 1.72 lb)
GV-PA191	Power over Ethernet (PoE) Adapter		The GV-PA191 is a Power over Ethernet (PoE) adapter designed to provide power to the IP device through a single Ethernet cable.
GV-POE Switch		The GV-POE Switch is designed to provide power along with network connection for IP devices. The GV-POE Switch is available in various models with different numbers and types of ports.	
Power Adapter		Contact our sales representatives for the countries and areas supported.	