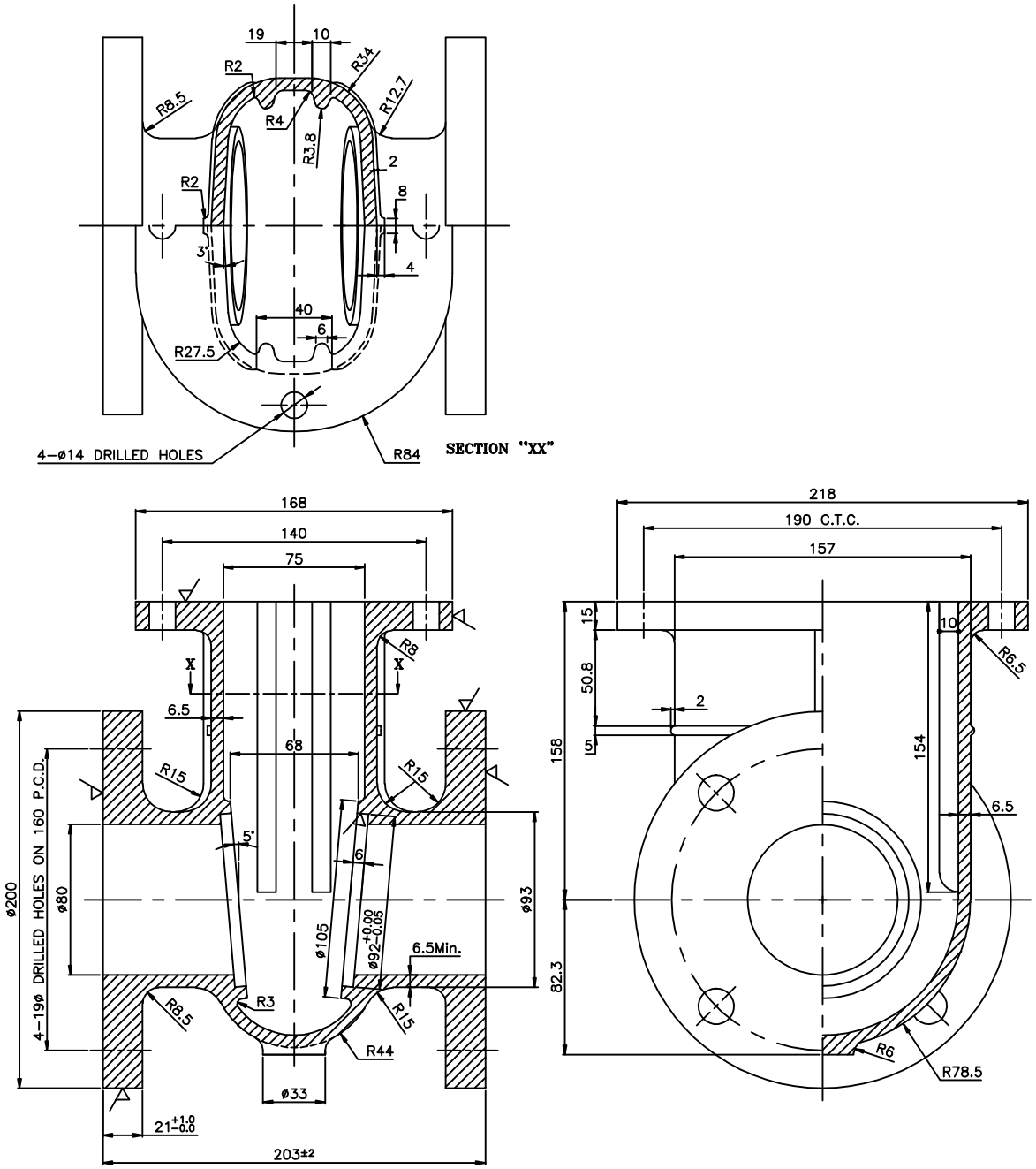
19
10
R2
R34
R8.5
R12.7
R4
R3.8
2
R2
8
3
4
40
6
R27.5
4–ø14 DRILLED HOLES
R84
SECTION "XX"
168
140
75
R8
X
X
6.5
68
R15
R15
5°
6
ø200
ø80
4–19ø DRILLED HOLES ON 160 P.C.D.
ø105
ø92+0.00 −0.05
ø93
6.5Min.
R3
R8.5
R15
R44
ø33
21+1.0 −0.0
203±2
218
190 C.T.C.
157
15
10
R6.5
50.8
2
158
5
154
6.5
82.3
R6
R78.5