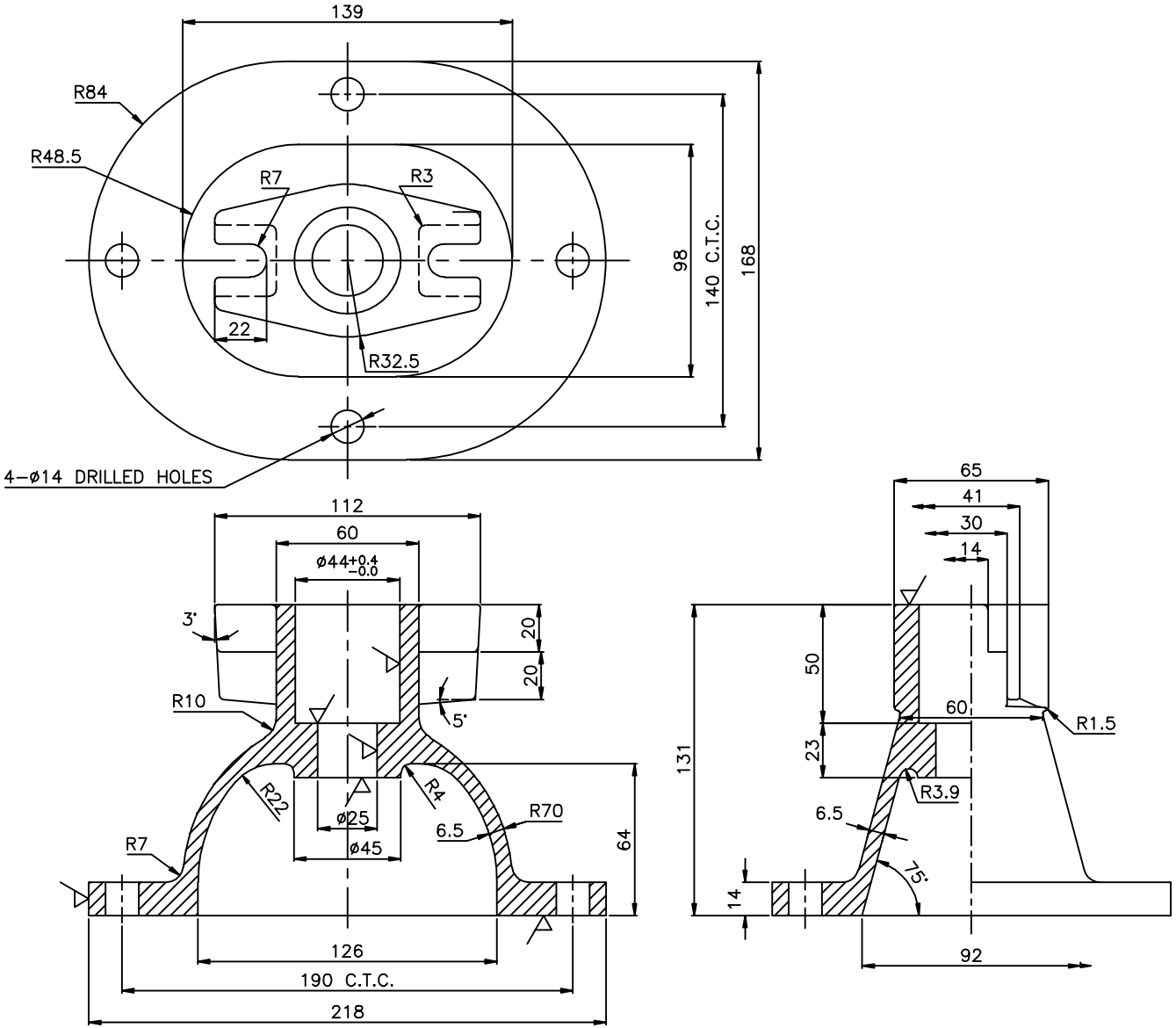
139
R84
R48.5
R7
R3
98
140 C.T.C.
168
22
R32.5
4–ø14 DRILLED HOLES
112
60
ø44+0.4 −0.0
3°
20
20
R10
5°
R22
R4
ø25
ø45
R70
6.5
64
R7
126
190 C.T.C.
218
65
41
30
14
50
60
R1.5
131
23
R3.9
6.5
75°
14
92