Sublimated Hockey Jersey

Need help with designs? Contact one of our representatives and we will be happy to assist you.

800-599-6404 or sales@coastalreign.com

COASTAL REIGN
CUSTOM PRODUCTS

Pantone Colours

Note: Gradients cannot use pantones

Pantone

RIGHT

LEFT

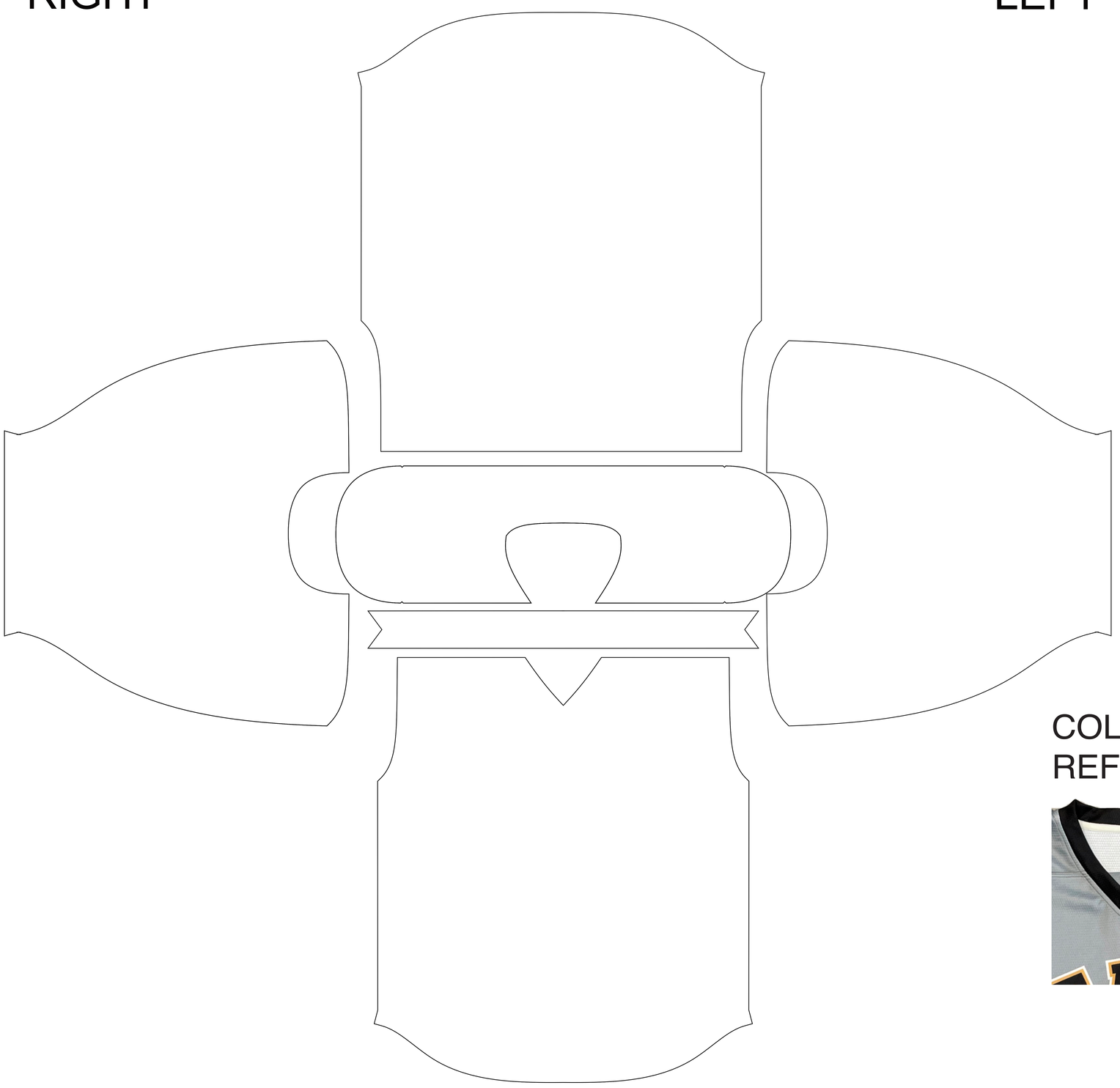

COLLAR REFERENCE

Example Of Coastal Reign Logo

Coastal Reign logo can be changed to any colour or can be removed upon request

DISCLAIMER: Custom names/numbers may be resized or split into multiple lines if they are too long.

MAIN LOGO	BACK LOGO	FRONT NUMBER	RIGHT LOGO
Dimensions: W" H "	Dimensions: W " H "	Height:	Dimensions: W" H "

ALTERNATE LOGO	PLAYER NAME	BACK NUMBER	LEFT LOGO
Dimensions: W H	Height:	Height:	Dimensions: W" H "

3D MOCKUP