Vault™

25" top-/undermount single-bowl kitchen sink

K-3822-1

Features

- 27" (686 mm) minimum base cabinet width
- Single bowl
- 9" (229 mm) depth provides generous workspace
- Single faucet hole
- Rear drain placement increases cabinet storage space underneath sink
- Box includes: Sink, installation hardware, cutout template

Material

- Premium 18-gauge stainless steel

Installation

- Top-mount or undermount

Recommended Products/Accessories

K-8801 Sink drain and strainer with tailpiece
K-8799 Sink drain and strainer basket
K-23726 Drain treatment
K-23729 Stainless steel cleaner

Optional Products/Accessories

K-6429 Utility Rack
K-6667 Wood Cutting Board
1177161 Installation Clip Kit
K-11352 Disposal Flange with Stopper

Included Components

1177160 Hardware Kit, Self-Rimming

Codes/Standards

ASME A112.19.3/CSA B45.4

KOHLER® Stainless Steel Sinks Lifetime Limited Warranty

See website for detailed warranty information.

Vault™

25" top-/undermount single-bowl kitchen sink

K-3822-1

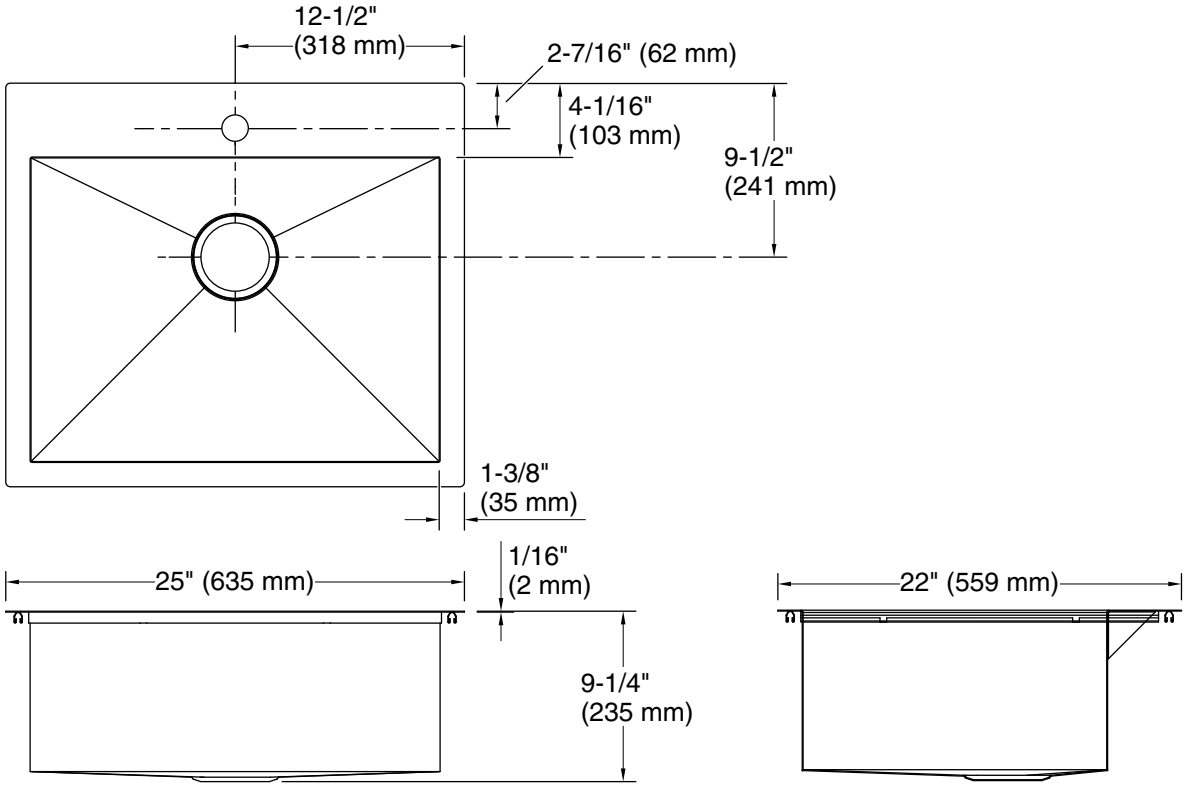

Technical Information

All product dimensions are nominal.

Basin configuration:	Single Bowl
Min. base cabinet width:	27" (686 mm)
Bowl area (Basin #1):	Length: 22-1/4" (565 mm) Width: 16-9/16" (421 mm) Bowl depth: 9" (229 mm) Water depth: 9" (229 mm)
Number of deck holes:	1
Faucet hole(s):	1-7/16" (37 mm)
Drain hole:	3-7/8" (98 mm)
Template:	1130822-7, required, included

Notes

Install this product according to the installation instructions.

Allow 3/4" (19 mm) clearance beyond the back of the bowl for the wood cutting board (optional accessory).