# INSTALLATION MANUAL

## Sealed Combustion Gas Furnace

### Model Series: DGAX
### Single-Stage - Downflow Only

**56 MBH - 90 MBH Input**
**(16.41 kW - 26.38 kW) Input**

**For installation in:**

1. Manufactured (mobile) homes
2. Recreational vehicles and park models
3. Modular homes and buildings

Assembled at a facility with an ISO 9001:2015-certified Quality Management System

## List of sections


**Safety** . . . . . 1
**Ductwork** . . . . . 4
**Return air requirements** . . . . . 8
**Filters** . . . . . 9
**Gas line installation** . . . . . 10
**Electrical power** . . . . . 12
**Roof jack vent or combustion air system** . . . . . 14
**Start-up and adjustments** . . . . . 20
**Safety controls** . . . . . 24
**Wiring diagram** . . . . . 27


## List of figures


Unit dimensions . . . . . 4
Air distribution systems . . . . . 5
Closet to door clearance - 5 in. or greater . . . . . 5
Furnace to closet door clearance - 1 in. to 5 in. . . . . 6
Furnace to closet door clearance - less than 1 in. . . . . 6
Duct connector dimensions - in. (cm) . . . . . 6
Recommended floor cut-out . . . . . 7
Duct connector depth . . . . . 7
Duct connector screw attachment . . . . . 7
Duct connector tab attachment . . . . . 7
DGAX coil case dimensions . . . . . 8
Anti-backflow damper . . . . . 8
Floor installation . . . . . 9
Furnace air filters . . . . . 9
Gas piping . . . . . 10
Burner assembly . . . . . 11
Line wiring connections . . . . . 13
Wiring for heat only thermostat . . . . . 13
Wiring for electronic heat-cool thermostat . . . . . 13
Wiring for standard heat-cool thermostat . . . . . 13
Wiring for blend air accessory . . . . . 13
Standard roof jack . . . . . 15
Roof jack with removable crowns . . . . . 16
Roof jack . . . . . 17
Connecting roof jack to furnace . . . . . 17
Roof jack assembly . . . . . 18
Ceiling rings . . . . . 18
Home layout . . . . . 19
Gas valve . . . . . 22
Reading gas pressure . . . . . 23
Furnace control board . . . . . 23
Pressure switch tubing routing . . . . . 24
Wiring Diagram - DGAX . . . . . 27


## List of tables


Unit clearances to combustibles . . . . . 4
Unit dimensions . . . . . 4
External static pressure range . . . . . 8
Filter sizes - all models . . . . . 9
High altitude duration chart . . . . . 12
Ratings and physical and electrical data . . . . . 13
Extensions . . . . . 18
Inlet gas pressure range . . . . . 22
Nominal manifold pressure . . . . . 22
Blower performance CFM - downflow without filters . . . . . 24


## Section I: Safety

This is a safety alert symbol. When you see this symbol on labels or in manuals, be alert to the potential for personal injury.

Understand and pay particular attention to the signal words **DANGER**, **WARNING**, or **CAUTION**.

**DANGER** indicates an **imminently** hazardous situation, which, if not avoided, **will result in death or serious injury**.

**WARNING** indicates a **potentially** hazardous situation, which, if not avoided, **could result in death or serious injury**.

**CAUTION** indicates a **potentially** hazardous situation, which, if not avoided **may result in minor or moderate injury.** It is also used to alert against unsafe practices and hazards involving only property damage.

**⚠ WARNING**

*Incorrect installation may create a condition where the operation of the product could cause personal injury or property damage.*
*Incorrect installation, adjustment, alteration, service or maintenance can cause injury or property damage. Refer to this manual for assistance or for additional information, consult a qualified contractor, installer or service agency.*

**⚠ CAUTION**

*This product must be installed in strict compliance with the installation instructions and any applicable local, state, and national codes including, but not limited to building, electrical, and mechanical codes.*

## Specific safety rules and precautions

1. Only Natural gas or Propane (LP) gas are approved for use with this furnace. Refer to the furnace rating plate or Section IV of these instructions.
2. Install this furnace only in a location and position as specified in Section I of these instructions.
3. A gas-fired furnace for installation in a residential garage must be installed as specified in Section I of these instructions.

**⚠ WARNING**

*FIRE OR EXPLOSION HAZARD*

*Failure to follow the safety warnings exactly could result in serious injury, death or property damage.*

*Never test for gas leaks with an open flame. Use a commercially available soap solution made specifically for detection of leaks to check all connections. A fire or explosion may result causing property damage, personal injury or loss of life.*

4. Test for gas leaks as specified in Section V and Section VIII of this manual.
5. Always install the furnace to operate within the furnaces intended temperature rise range. Only connect the furnace to a duct system which has an external static pressure within the allowable range, as specified on the furnace rating plate.
6. When a furnace is installed so that supply ducts carry air circulated by the furnace to areas outside the space containing the furnace, the return air may also be handled by ducts sealed to the furnace casing and terminating outside the space containing the furnace. The return air duct system is not required by the furnace manufacturer as long as the combustion air and vent system have been installed and maintained as a Sealed Combustion Direct Vent System and provided a return air duct system and return air plenum are not required by state, local, or regional codes.

**⚠ WARNING**

*Improper installation may damage equipment, can create a shock hazard, and will void the warranty.*

*The furnace shall be installed so the electrical components are protected from water.*

*The furnace is not to be used for temporary heating of buildings or structures under construction.*

*Do not test the fuel system at more than 14 in. W.C. after furnace has been connected to the fuel line. Such testing may void the warranty. Any test run above 14 in. W.C. column may damage the furnace control valve which could cause an explosion, fire, or asphyxiation.*

**Meet the following requirements for safe use of this unit:**

a. Clean outside combustion air is provided to the furnace to minimize the impact of corrosive adhesives, sealants, and other construction materials.
b. The filter must be installed in the furnace as specified in the installation instructions, and must be replaced or thoroughly cleaned prior to occupancy of the home. Drywall dust is a major concern during construction as it can be pulled into the combustion air path, leading to plugged heat exchangers, burners, and inducer assemblies.
c. The air temperature rise must be within the stated rise range as indicated on the furnace rating plate, and the firing input rate must be set to the unit nameplate value.
d. The external static pressure of the air distribution system ductwork must be set for heating operation to be at least 0.1 in. W.C. to 0.2 in. W.C., based on the input rate of the furnace, with the lower value for input rates less than 55,000 Btu/h and the upper value for units with input rates above 100,000 Btu/h.
e. The furnace and ductwork should be thoroughly and completely cleaned prior to occupancy of the dwelling to insure the correct operation of the furnace and to avoid potential health concerns.

7. In Canada refer to the Natural Gas and Propane Installation code, section on Central Furnaces. When installed in a Manufactured (Mobile) Home, combustion air must not be supplied from occupied spaces.
8. The size of the unit should be based on an acceptable heat loss calculation for the structure. ACCA, Manual J or other approved methods may be used.
9. **Manufactured (mobile) home and modular home installation:** This appliance must be installed in a (sealed combustion) configuration using a roof jack vent system. A roof jack is the only approved vent system that can be used to vent this appliance.
10. **Modular home definition:** Factory-built home constructed to the state, local, or regional code where the house will be located. The home is transported in one or more modules and joined at the home site.
11. **Manufactured (mobile) home definition:** Factory-built home constructed, transported and installed under the federal building code administered by the U.S. Department of Housing and Urban Development (HUD Code), rather than to building codes at their destination. The house is built, transported and installed on a non-removable chassis.

## Safety requirements

- Provide clearances from combustible materials as listed under *furnace locations and clearances*.
- Provide clearances for servicing ensuring that service access is allowed for both the burners and blower.
- These models are CSA listed and approved for installation into a modular home, manufactured (mobile) home, or recreational vehicles.
- Failure to carefully read and follow all instructions in this manual can result in furnace malfunction, death, personal injury and/or property damage.
- Furnaces for installation on combustible flooring must not be installed directly on carpeting, tile or other combustible material other than wood flooring.
- Check the rating plate and power supply to be sure that the electrical characteristics match. All models use nominal 115 VAC, single-phase, 60 Hz power supply. Do not connect this appliance to a 50 Hz power supply or a voltage above 130 V.
- Furnace must be installed so the electrical components are protected from water.
- Installing and servicing heating equipment can be hazardous due to the electrical components and the gas fired components. Only trained and qualified personnel can install, repair, or service gas heating equipment. Untrained service personnel can perform basic maintenance functions such as cleaning and replacing the air filters. When working on heating equipment, observe precautions in the manuals and on the labels attached to the unit and other safety precautions that may apply.
- These instructions cover minimum requirements and conform to existing national standards and safety codes. In some instances these instructions exceed certain local codes and ordinances, especially those who have not kept up with changing modular home and manufactured (mobile) home construction practices. These instructions are required as a minimum for a safe installation.

### Manufactured homes in the United States:

- Federal Manufactured Home Construction and Safety Standard (H.U.D. Title 24, Part 3280).
- National Fuel Gas Code (ANSI-Z223.1, NFPA-54).
- National Electrical Code (NFPA 70).

### Manufactured homes in Canada:

- Natural Gas and Propane Installation Code (CAN/CSA B149.1).
- Canadian Electrical Code, Part 1 (CSA C22.1)

### Recreational Vehicles in United States:

- Standard on Recreational Vehicles (NFPA 1192, formerly NFPA 501C).
- National Electrical Code (NFPA 70).

### Recreational Vehicles in Canada:

- Unit installation shall comply with current CSA standard CAN/CGA-Z240.4.2 - Installation Requirements for Propane Appliances and Equipment in Recreational Vehicles.
- Unit electrical wiring and grounding shall comply with current CSA standard C22.2 No.148/CAN/CSA-Z240.6.2 - Electrical Requirements for recreational vehicles.

## Combustion air quality (list of contaminants)

The furnace requires outdoor air for combustion at all times, including any of the following environments.

- Restricted environments
- Commercial buildings
- Buildings with indoor pools
- Laundry rooms
- Hobby or craft rooms
- Near chemical storage areas
- Chemical exposure

This furnace requires outdoor air for combustion at all times, as well as where the furnace is being exposed to the following substances or chemicals.

- Permanent wave solutions
- Chlorinated waxes and cleaners
- Chlorine based swimming pool chemicals
- Water softening chemicals
- De-icing salts or chemicals
- Carbon tetrachloride
- Halogen type refrigerants
- Cleaning solvents (such as perchloroethylene)
- Printing inks, paint removers, varnishes, etc.
- Hydrochloric acid
- Cements and glues
- Antistatic fabric softeners for clothes dryers
- Masonry acid washing materials

When outdoor air is used for combustion, the combustion air intake duct system termination must be located external to the building and in an area where there will be no exposure to the substances listed above.

**⚠ WARNING**

*The furnace area must not be used as a broom closet or for any other storage purposes, as a fire hazard may be created. Never store items such as the following on, near or in contact with the furnace.*

1. Spray or aerosol cans, rags, brooms, dust mops, vacuum cleaners or other cleaning tools.
2. Soap powders, bleaches, waxes or other cleaning compounds; plastic items or
3. Containers; gasoline, kerosene, cigarette lighter fluid, dry cleaning fluids or other volatile fluid.
4. Paint thinners and other painting compounds.
5. Paper bags, boxes or other paper products

***Never operate the furnace with the blower door removed. To do so could result in serious personal injury and/or equipment damage.***

## Inspection

As soon as you receive the furnace and accessories, inspect them for damage during transit. If damage is evident, the extent of the damage must be noted on the carrier's freight bill. A separate request for inspection by the carrier's agent must be made in writing. Also, before installation the furnace and accessories must be checked for screws or bolts which have loosened in transit or shipping and spacer brackets that need to be removed.

## Furnace location and clearances

**The furnace must be located using the following guidelines:**

1. The furnace must be located where the roof jack can be installed without major modifications to the roof of the structure.
2. The furnace must be as centralized with regards to air distribution as possible.
3. The furnace must be located where there is access to fresh air. This is important for the blend air accessory.
4. The furnace must be in a location where it will not interfere with proper air circulation in the confined space.
5. The outdoor roof jack terminal must not be blocked or restricted. Refer to vent clearances located in Section VII of these instructions. These minimum clearances must be maintained through out the installation.
6. The unit must be installed in a level position with no more than 1/4 in. (0.64 cm) slope side-to-side and front-to-back to provide a correct roof jack connection and seal.

**Installation in freezing temperatures:**

1. The furnace must be installed in an area where ventilation facilities provide for safe limits of ambient temperature under normal operating conditions. Ambient temperatures may fall below 32°F (0°C) providing the flue temperature does not fall below 260°F (127°C) at any point in the flue pipe. If the flue temperature falls below 260°F (127°C) the flue products will condense in the vent pipe causing the vent pipe to deteriorate rapidly.
2. Do not allow return air temperature to be below 55ºF (13°C) for extended periods. To do so may cause condensation to occur in the main heat exchanger, leading to premature heat exchanger failure.

**⚠ WARNING**

*Installation in an ambient below 32ºF (0.0°C) could create a hazard, resulting in damage, injury or death.*

3. If this furnace is installed in an unconditioned space and an extended power failure occurs, there will be potential damage to the internal components. Following a power failure situation, do not operate the unit until inspection and repairs are performed.

**Clearances for access:**

Ample clearances must be provided to permit easy access to the unit. Ensure to allow the following minimum clearances:

1. There must be 24 in. (61 cm) between the front of the furnace and an adjacent wall or another appliance, when access is required for servicing and cleaning.
2. There must be 18 in. (46 cm) at the side where access is required for passage to the front when servicing or for inspection or replacement of flue/vent connections.

In all cases, accessibility clearances take precedence over clearances for combustible materials where accessibility clearances are greater. See **Table 1**.

**⚠ WARNING**

*Check the rating plate and power supply to be sure that the electrical characteristics match. All models use nominal 115 VAC, 1 Phase 60 Hz power supply.*

*Furnace shall be installed so the electrical components are protected from water.*

**Installation in a residential garage:**

A gas-fired furnace for installation in a residential garage must be installed so the burners and the ignition source are located not less than 18 in. (46 cm) above the floor, and the furnace must be located or protected to avoid physical damage by vehicles.

**Table 1:** Unit clearances to combustibles

| Minimum distance to combustible materials | | | | | | | | | | | | | | |
|---|---|---|---|---|---|---|---|---|---|---|---|---|---|---|
| Application | Top | | Front | | Rear | | Sides | | Roof jack flue | | Floor[1] | | Duct[1] | |
| | Closet | Alcove | Closet | Alcove | Closet | Alcove | Closet | Alcove | Closet | Alcove | Closet | Alcove | Closet | Alcove |
| | in. | in. | in. | in. | in. | in. | in. | in. | in. | in. | in. | in. | in. | in. |
| Downflow | 2 | 2 | 6 | 24 | 0 | 0 | 0 | 0 | 0 | 0 | 0 | 0 | 0 | 0 |

1. Approved duct connector required for use on combustible floor.

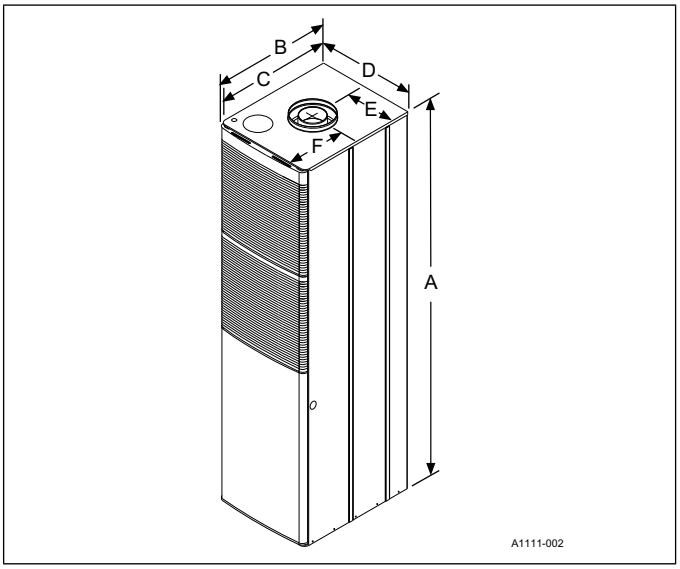


**Figure 1:** Unit dimensions

**Table 2:** Unit dimensions

| Dimension | in. | cm |
|---|---|---|
| A | 76 | 193.0 |
| B | 24 3/4 | 62.9 |
| C | 23 | 58.4 |
| D | 19 1/2 | 49.5 |
| E | 9 3/4 | 24.8 |
| F | 12 | 30.5 |

## Section II: Ductwork

### Ductwork general information

**The duct system's design and installation must:**

1. Handle an air volume appropriate for the served space and within the operating parameters of the furnace specifications.
2. Be installed in accordance with standards of NFPA (National Fire Protection Association) as outlined in NFPA pamphlets 90A and 90B (latest editions) or in Canada in accordance with the CAN/CGA-B149.1-00 Natural Gas and Propane Installation Code. The duct system's design and installation must also be installed in accordance with all applicable national, provincial, or state, and local fire and safety codes.
3. **For manufactured (mobile) home and modular home return duct system installations:** The return air duct and the return air plenum are not required by the furnace manufacturer provided a return air duct and plenum are not required by state, local, or regional codes. The only vent system that is approved for use on this furnace is a roof jack which is a Sealed Combustion Direct Vent System.
4. Complete a path for heated or cooled air to circulate through the air conditioning and heating equipment and to and from the conditioned space.

**⚠ CAUTION**

*The cooling coil must be installed in the supply air duct, downstream of the furnace. Cooled air may not be passed over the heat exchanger, and must comply with (H.U.D.) TITLE 24, PART 3280.709*

When the furnace is used in conjunction with a cooling coil, the coil must be installed parallel with, or in the supply air side of the furnace to avoid condensation in the primary heat exchanger. When using a parallel flow arrangement, a damper or other means used to control airflow must be adequate to prevent chilled air from entering the furnace. If manually operated, the damper must be equipped with means to prevent the furnace or the air conditioner from operating unless the damper is in full heat or cool position.

**⚠ WARNING**

*The duct system must be correctly sized to obtain the correct airflow for the furnace size that is being installed.*

*Refer to the furnace rating plate for the correct rise range and Table 4 for static pressures.*

*If the ducts are undersized, the result will be high duct static pressures and/or high temperature rises which can result in a heat exchanger* ***overheating condition****. This condition can result in premature heat exchanger failure, which can result in personal injury, property damage, or death.*

**⚠ WARNING**

***Hazard of asphyxiation, Do not cover or restrict floor opening.***

The duct system is a very important part of the installation. If the duct system is incorrectly sized, the furnace does not operate as intended. The ducts attached to the furnace plenum must be of sufficient size so that the furnace operates at the specified external static pressure and within the air temperature rise specified on the nameplate

**Important:** *Fabricate and install an inspection door in the plenum base below the unit to allow an annual inspection of the heat exchangers. The inspection door can be fabricated by the following method*

1. Cut a rectangular opening in the plenum base.
2. A sheet metal plate can be made to completely cover the opening in the base.
3. The plate must be secured with screws.
4. This plate must be sealed to prevent leaks.

**⚠ WARNING**

*The supply air temperature* ***MUST NEVER*** *exceed the* ***Maximum Supply Air Temperature****, specified on the nameplate.*

*Operating the furnace above the maximum supply air temperature will cause the heat exchanger to overheat, causing premature heat exchanger failure. Improper duct sizing, dirty air filters, incorrect manifold pressure, incorrect gas orifice and/or a faulty limit switch can cause the furnace to operate above the maximum supply air temperature. Refer to sections II, III and XI for additional information on correcting the problem.*

## Ductwork installation

### Air distribution systems

For correct air distribution, the supply duct system must be designed so that the static pressure does not exceed the listed static pressure rating on the furnace rating plate.

See **Figure 2** for three typical distribution system examples.

Select location, size and number of registers on the basis of best air distribution and the floor plan of the home.

Adjust the air temperature rise to obtain a temperature rise within the ranges specified on the furnace rating plate.

## Duct design - Canada

Supply duct design must be in accordance with the latest HRA Digest, the ASHRAE Handbook Fundamentals, or other good engineering principles.

Refer to HRA Digest Residential Air System Design Manual, Sections V and VI, the requirements of which are summarized as follows:

1. The kilowatt output of each duct register must not exceed 2.35 kW.
2. The furnace output must not be more than 20% greater than the calculated heat loss of the home. If a larger furnace is used, the duct system must be capable of the increased air volumes necessary to maintain a maximum air temperature rise of 50°C as the air passes over the furnace heat exchanger.
3. At least one warm air supply outlet shall be provided in each room.
4. When rooms are located adjacent to the exterior walls, warm air outlets must be located so as to bathe at least one exterior wall and, where practical, a window area with warm air, except for bathrooms or kitchens where this might not be practical.
5. Where practical, provide outlets near the exterior doors of the home.

## Clearance requirements - Canada

Supply air ducts from warm air furnaces having a specified minimum plenum clearance must maintain this clearance from combustible material for at least the distance specified in CSA Standards C22.2 No. 23 or B140.10 or CGA Standard CAN/CGA-2.3.

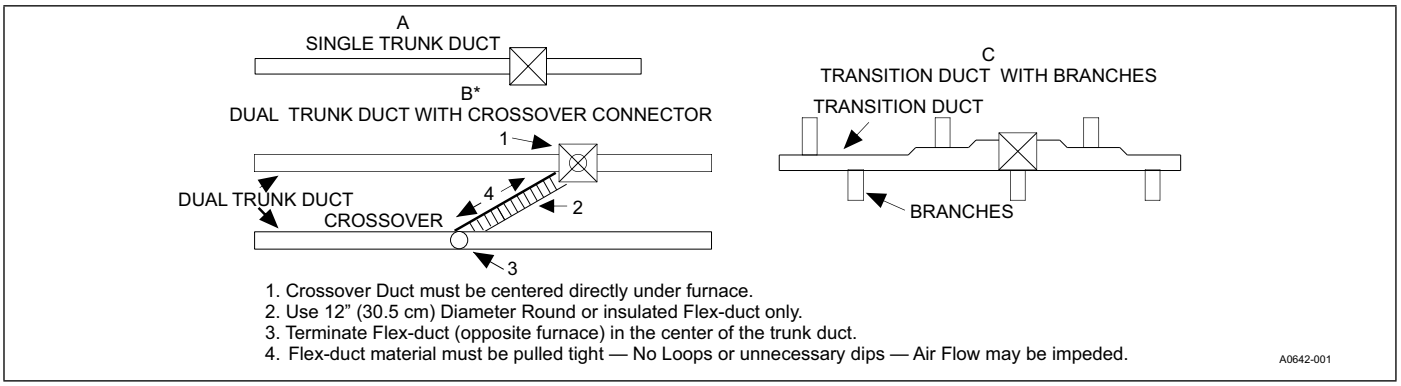


**Figure 2:** Air distribution systems

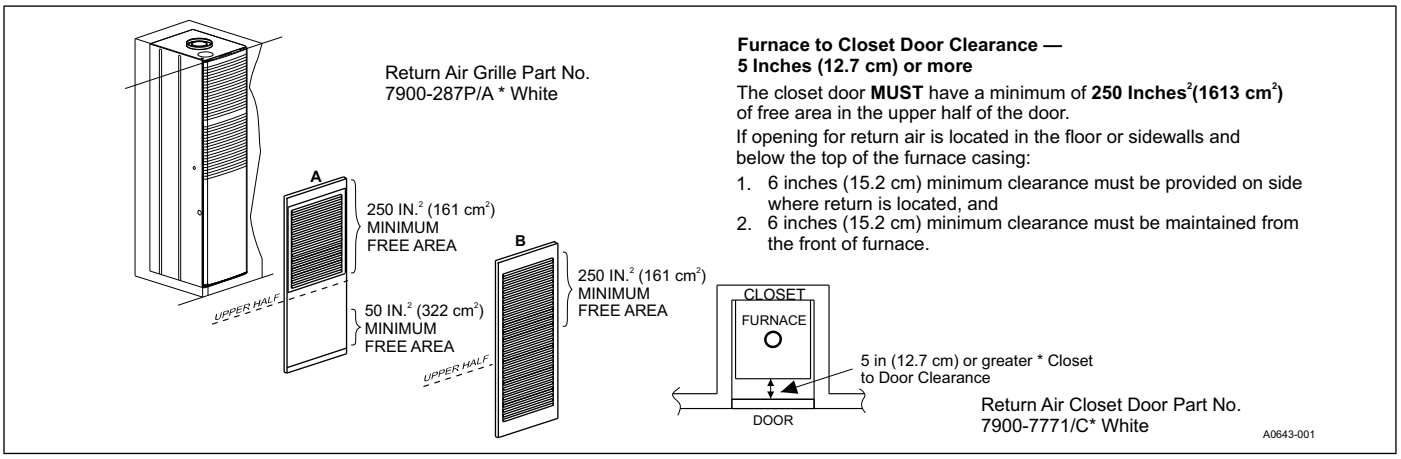


**Figure 3:** Closet to door clearance - 5 in. or greater

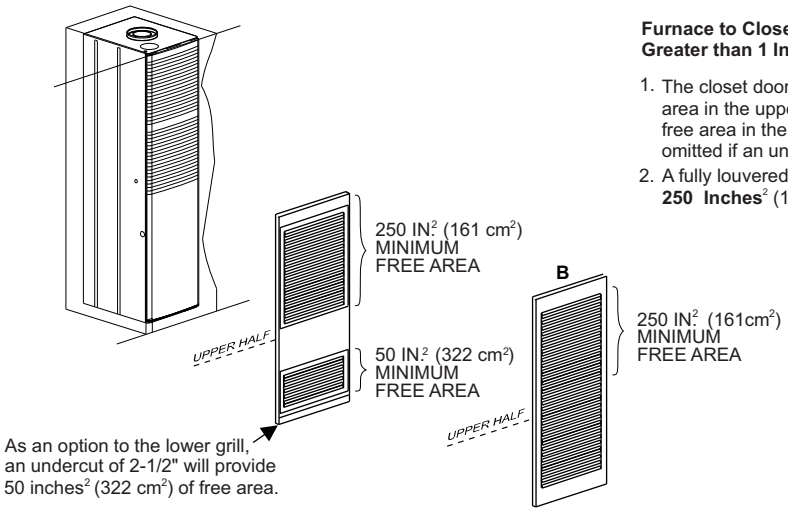


**Furnace to Closet Door Clearance —**
**Greater than 1 Inch (2.54 cm) and Up to 5 (12.7 cm) Inches**

1. The closet door **MUST** have a minimum of **250 Inches**² (1613 cm²) of free area in the upper half of the door and a minimum of **50 Inches**² (322 cm²) of free area in the lower area of the door. The lower closet door grille may be omitted if an undercut of 2-1/2 inches (16.1 cm) is provided in the door.
2. A fully louvered closet door **MUST** have a minimum of **250 Inches**² (1613 cm²) of free area in the upper half of the door.

A0644-001

**Figure 4:** Furnace to closet door clearance - 1 in. to 5 in.

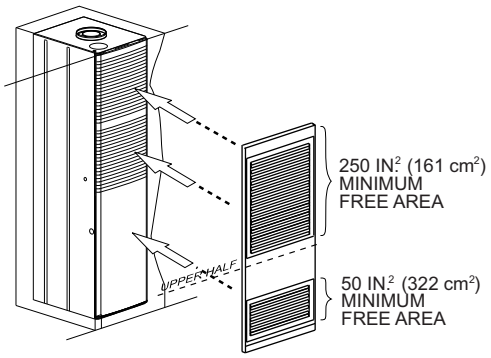


**Furnace to Closet Door Clearance —**
**Less than 1 Inch (2.54 cm)**

The closet door MUST have three return air grilles. The total free area of the two upper grilles must be minimum of **250 Inches²** (1613 cm²) . The total free area of the lower grille MUST be a minimum of **50 Inches² (322 cm²)**. **The grilles MUST BE ALIGNED directly opposite the return air grille of the furnace door.**

A0645-001

**Figure 5:** Furnace to closet door clearance - less than 1 in.

## Duct connectors

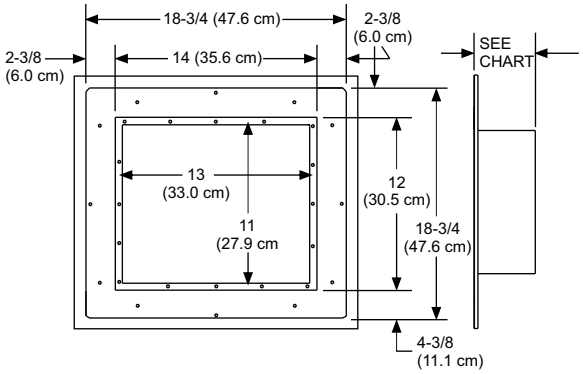


**DUCT CONNECTOR DIMENSIONS**

| DUCT CONNECTOR PART NUMBER | DUCT CONNECTOR DEPTH |
|---|---|
| 7990-6061 | 6-1-2” (16.5 cm) |
| 7990-6071 | 7-1/2” (19.0 cm) |
| 7990-6081 | 8-1/2” (21.6 cm) |

A1175-001

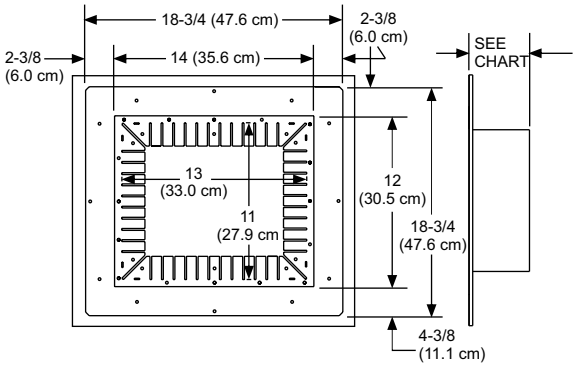


**DUCT CONNECTOR DIMENSIONS**

| DUCT CONNECTOR PART NUMBER | DUCT CONNECTOR DEPTH |
|---|---|
| 7990-6211 | 1” (2.5 cm) |
| 7990-6221 | 2” (5.7 cm) |
| 7990-6241 | 4-1/2” (11.4 cm |
| 7990-6261 | 6-1-2” (16.5 cm) |
| 7990-6271 | 7-1/2” (19.0 cm) |
| 7990-6281 | 8-1/2” (21.6 cm) |
| 7990-6301 | 10-1/4” (26.0 cm) |

A1174-001

**Figure 6:** Duct connector dimensions - in. (cm)

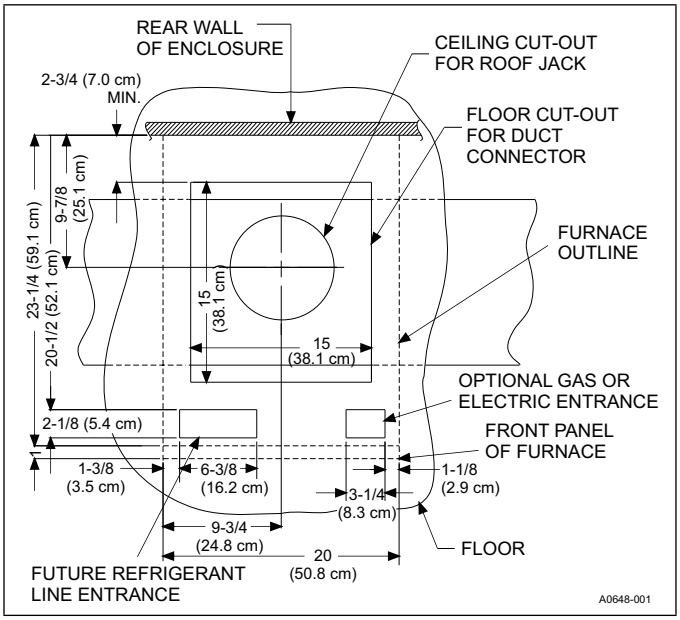


**Figure 7:** Recommended floor cut-out

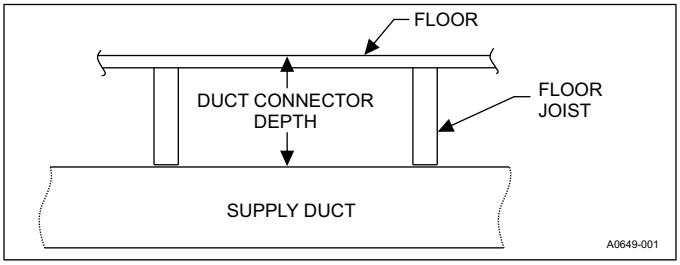


**Figure 8:** Duct connector depth

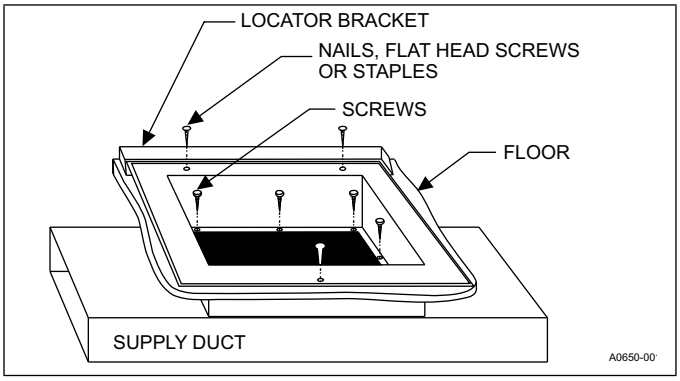


**Figure 9:** Duct connector screw attachment

## Installing screw attachment duct connector

1. Make floor cut-out as shown in **Figure 7**.
2. Determine the depth of the floor cavity from the surface of the floor to the top of the supply air duct and select the appropriate duct connector from the chart. See **Figure 6** and **Figure 8**.
3. Place locating bracket (supplied with the duct connector) to the back edge of the floor opening. See **Figure 9**.
4. Apply a water based duct sealant to the 1/2 in. supply duct attachment flange of the duct connector.
5. Determine which of the four positions the duct connector best centers over the supply duct and insert it through the floor cut-out.
6. When correctly aligned with the supply duct, secure the duct connector to the floor with nails, flat head screws or staples.
7. Use screws as required to secure the duct connector to the supply duct.
8. Cut out the opening to the supply duct. If sealant was not used, the installer should tape the mating flanges to provide a good air seal.

**NOTICE**

*Duct sealant and tape must be classified as meeting HUD Standard 3280.715, U.L. Standard 181A.*

If using tape to provide a better air seal, it must be a type approved by the applicable national or local codes.

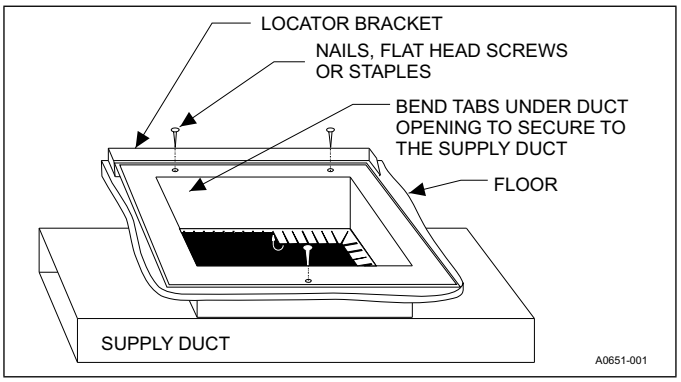


**Figure 10:** Duct connector tab attachment

## Installing tab attachment duct connectors

1. Make floor cut-out as shown in **Figure 7**.
2. Determine the depth of the floor cavity from the surface of the floor to the top of the supply air duct and select the appropriate duct connector from the chart. See **Figure 6** and **Figure 8**.
3. Place the locating bracket which is supplied with the duct connector to the rear of the floor area for the furnace. See **Figure 10**.
4. Determine which of the four positions the duct connector best centers over the supply duct and insert it through the floor cut-out.
5. Mark cut-out location on the supply duct and remove the duct connector.
6. Cut out the opening to the supply duct.
7. Bend tabs down through and back up under the supply duct.
8. Secure the duct connector to the floor with nails, flat head screws or staples.

The duct connector is designed for use on ducts down to 12 in. in width. When using the connector on smaller width ducts, there will not be sufficient clearance to bend the tabs on two sides of the duct connector.

In such cases the tabs may be attached to the sides of the duct by using sheet metal screws or other suitable fasteners. Holes for sheet metal screws are provided in three tabs on each side of the duct connector. If more than tabs need to be used to provide a more secure and air tight connection, the remaining tabs can also be fastened to the duct with screws after drilling the required screw hole.

## Furnace and air conditioner installations

The furnace contains a built in cabinet for an add-on air conditioning or heat pump indoor coil. Maximum indoor coil dimensions are shown in **Figure 11**. If an air conditioner is installed which does not use the blower for air distribution and operates completely independent of the furnace, the thermostat system must have an interlock to prevent the furnace and air conditioner from operating at the same time. This interlock system usually contains a heat-cool switch which must be turned to either HEAT or COOL to activate either heating or cooling operation, or a positive OFF switch on the cooling thermostat.

When used in connection with a cooling unit, the furnace must be installed parallel with or on the upstream side of the cooling unit to avoid condensation in the heat exchanger.

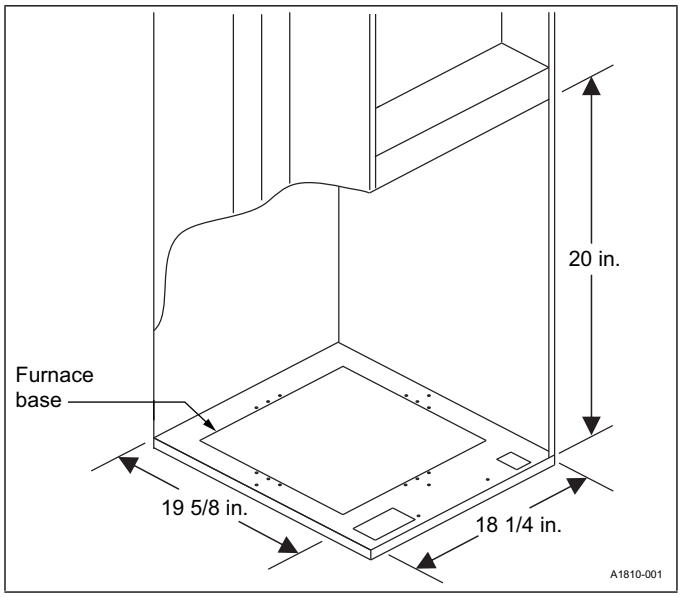


**Figure 11:** DGAX coil case dimensions

For installations with a parallel flow arrangement, the furnace must be equipped with a damper to prevent cold air from being discharged up around the heat exchanger. Cold air causes condensation inside the exchanger and can cause it to rust out which can allow products of combustion to be circulated into the living area by the furnace blower resulting in possible asphyxiation. An air flow activated automatic damper, P/N 7900-6771, is available from furnace manufacturer. See **Figure 12**.

**NOTICE**

*See label on coil panel for conversion and lighting instructions. Obtain a temperature rise within the ranges specified on the name plate.*

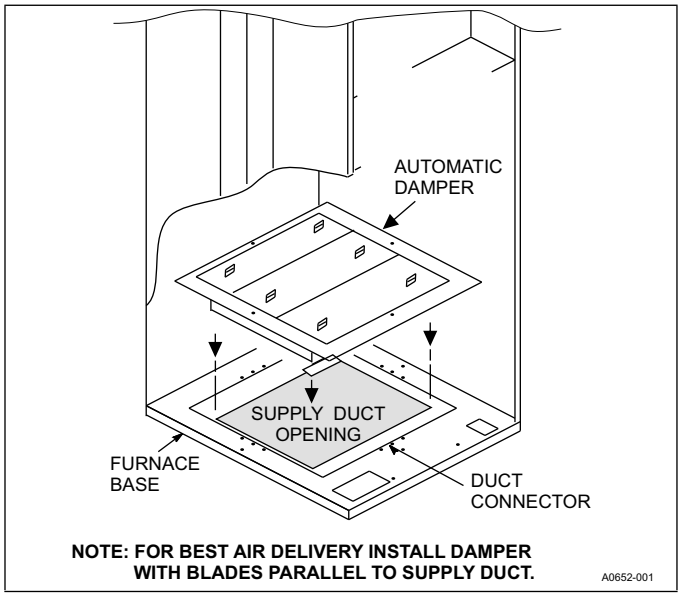


**Figure 12:** Anti-backflow damper

### Installation recommendations

1. Remove the front panels and set the furnace onto the duct connector. Slide it back until the rear of the unit engages the locator bracket.
2. Secure the front of the furnace with two screws at the mounting holes provided.
3. Secure the top of the furnace to a structural member using a screw through the strap at the back of the furnace. Strap may be moved to any of the holes located along the top back of the furnace. Installer may provide an equivalent method, such as screws through the casing side.

The duct system is an important part of the installation. If the duct system is incorrectly sized, the furnace will not operate properly. The ducts attached to the furnace plenum should be of sufficient size so that the furnace operates at the specified external static pressure and within the air temperature rise specified on the nameplate.

Consideration should be given to the heating capacity required and also to the air quantity (CFM) required. These factors can be determined by calculating the heat loss and heat gain of the home or structure. If these calculations are not performed and the furnace is over-sized, the following may result:

1. Short cycling of the furnace
2. Wide temperature fluctuations from the thermostat setting
3. Reduced overall operating efficiency of the furnace

The supply and return duct system must be of adequate size and designed such that the furnace will operate within the designed air temperature rise range and not exceed the maximum designed static pressure. These values are listed in **Table 2**.

## Section III: Return air requirements

### Closet installations

#### Additional requirements

Additional requirements for floor and ceiling return system for closet installed sealed combustion heating appliance are given in the next paragraph.

**⚠ WARNING**

***HAZARD OF ASPHYXIATION, DO NOT COVER OR RESTRICT FLOOR OPENING.***

**Table 3:** External static pressure range

| Input | | Output | | Nominal air flow[1] | | External static pressure | | | |
|---|---|---|---|---|---|---|---|---|---|
| | | | | | | Minimum | | Maximum | |
| MBH | kW | MBH | kW | CFM | $m^3$/min | in. W.C | kPa | in. W.C | kPa |
| 56 | 16.4 | 45 | 12.9 | 741 | 21.0 | 0.10 | 0.0249 | 0.30 | 0.0747 |
| 70 | 20.5 | 56 | 16.4 | 923 | 26.1 | 0.10 | 0.0249 | 0.30 | 0.0747 |
| 77 | 22.5 | 62 | 18 | 998 | 28.3 | 0.10 | 0.0249 | 0.30 | 0.0747 |
| 90 | 26.3 | 72 | 21.1 | 1164 | 33.0 | 0.10 | 0.0249 | 0.30 | 0.0747 |

1. Standard ECM blower high-speed 0.3 in. W.C. external static and without a coil and filters.

**Important:** *The air temperature rise should be taken only after the furnace has been operating for at least 15 min. Temperatures should be taken 6 in. (15.2 cm) past the first bend from the furnace in the supply duct. The return air temperature must be taken at the return air louvered door. Return static pressures can be taken by pushing probe through the air filter on the louvered door.*

### Blend air installations

If a blend air ventilation system is installed, the 5 in. (12.7 cm) diameter knockout in the top cover must be removed. The blend air damper must be placed on the top cover and secured with screws as shown in **Figure 12**. The power wires for the blend air damper are inserted through the 7/8 in. (2.22 cm) hole in the top cover. The wires to the blend air damper are connected as shown in **Figure 20**. Refer to the *Blend Air Installation Manual* to complete the installation.

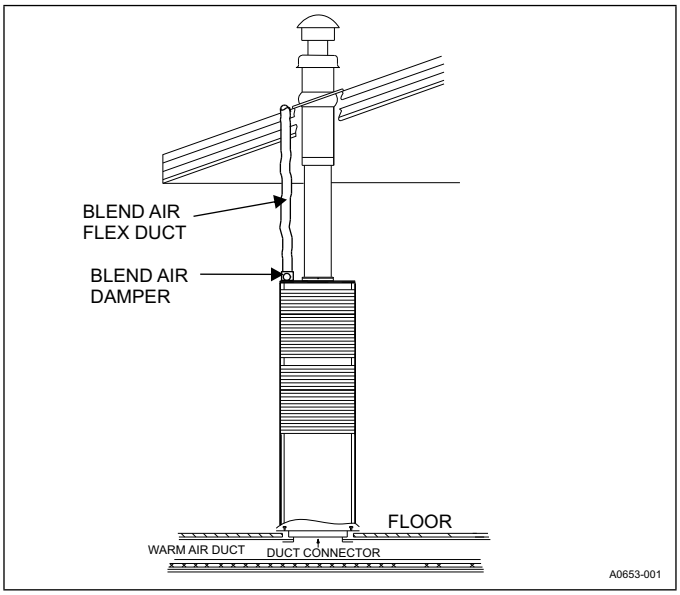


**Figure 13:** Floor installation

## Section IV: Filters

### Filter installation

All applications require the use of a filter. A standard air filter is located in the return filter rack on the louvered door. The air filters must be replaced with air filters that are the same size and same type. See **Table 3** for the replacement filter sizes.

**⚠ CAUTION**

*All installations must have a filter installed.*

### Downflow filters

There are two types of downflow filter racks.

1. **Furnace filter rack:** A return filter rack with two standard throwaway type filters are supplied on all models. The return filter rack is located on the inside of the louvered door. This type of filter rack is designed for two standard air filters only. Pleated media or washable filters cannot be used in this filter rack because they cause too much pressure drop causing a reduction in airflow. See **Figure 13**.
2. **External return filter grille:** The second type is an external return air filter grille that can only be used in applications where the furnace is installed in a closet. This type of filter grille is typically installed in a closet door or wall with the filters located within 12 in. (30.5 cm) of the return air opening of the furnace. There must be a minimum clearance of 6 in. (15.2 cm) between the front of the furnace and the closet door and the furnace and the filter grille to prevent the return air flow from being obstructed. See **Table 1**.

**NOTICE**

*Remove air filters inside louvered door when using an external filter grille.*

a. If you use the standard throwaway filter, the external filter grille must have a minimum area of 540 in² (3483 cm²) which would equal a 15 in. X 36 in. filter grille.
b. If you use the pleated media or washable filters, the external filter grille must have a minimum area of 684 in² (4413 cm²) which would equal a 18 in. X 38 in. filter grille. The increased area is to reduce the pressure drop across the air filter.
c. Consider maintenance access when locating the return filter grille.
d. Check any filter that has a large pressure drop to be sure the pressure drop caused by the air filter does not prevent the furnace from operating within the rise range, specified on the rating plate and in **Table 5**. If the furnace does not operate within the specified rise range, then a larger air filter or an air filter that has a lower pressure drop must be installed.

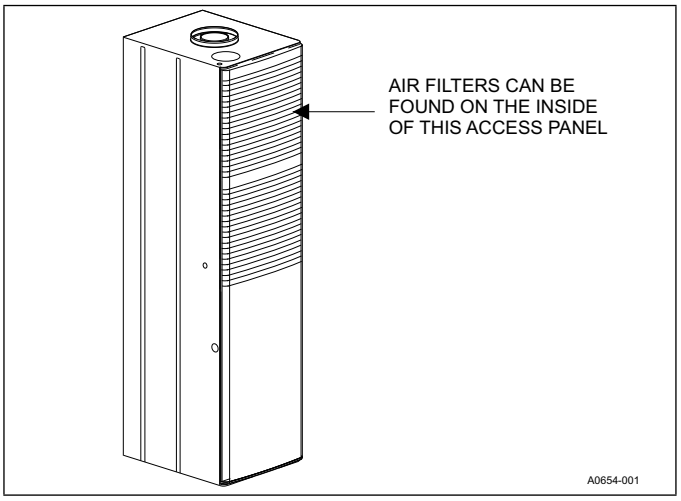


**Figure 14:** Furnace air filters

**Table 4:** Filter sizes - all models

| Input | | Output | | Air flow | Cabinet width | Door filter[1] | |
|---|---|---|---|---|---|---|---|
| MBH | kW | MBH | kW | CFM | in. | in. | cm |
| 56 | 16.4 | 44.8 | 13.1 | 637 | 19 3/4 | 2 - 16 x 20 x 1 | 2 x 41 x 51 |
| 70 | 20.5 | 56 | 16.4 | 923 | 19 3/4 | 2 - 16 x 20 x 1 | 2 x 41 x 51 |
| 77 | 22.5 | 62 | 18.1 | 998 | 19 3/4 | 2 - 16 x 20 x 1 | 2 x 41 x 51 |
| 90 | 26.3 | 72 | 21.1 | 1164 | 19 3/4 | 2 - 16 x 20 x 1 | 2 x 41 x 51 |

1. All models are shipped with disposable filters mounted inside the upper furnace door.
Pleated filters have a high pressure drop and require cleaning every 60 days.
Dirty filters can cause excess heating bills, lower air flow, and reduce heat exchanger life.

# Section V: Gas line installation

## Gas Safety

**⚠ DANGER**

*This furnace is designed to operate on NATURAL GAS or PROPANE GAS ONLY. Do Not Burn any other Fuel in this furnace. Burning any fuel except NATURAL GAS or PROPANE GAS can cause premature heat exchanger burnout, high levels of carbon monoxide, excessive sooting, a fire hazard, personal injury, property damage and /or death.*

**⚠ DANGER**

*An overpressure protection device, such as a pressure regulator, must be installed in the gas piping system upstream of the furnace and must act to limit the downstream pressure to the gas valve so it does not exceed 0.5 PSI (14 in. W.C. (3.48 kPa). Pressures exceeding 0.5 PSI (14 in. W.C. (3.48 kPa) at the gas valve will cause damage to the gas valve, resulting in a fire or explosion or cause damage to the furnace or some of its components that will result in property damage and loss of life.*

## Gas piping

### Installation and checking of gas line

Gas supply piping must be sized in accordance with the recommendations contained in National Fuel Gas Code (ANSI-Z223.1, NFPA-54) unless local codes or regulations state otherwise.

Materials used and pipe sizing for U.S. manufactured homes must comply with requirements contained in Manufactured Homes A119.1, Recreational Vehicles A119.2 and H.U.D. Title 24, Section 3280.705 and any local or state codes.

**NOTICE**

*The gas line inlet on the gas valve is 1/2 14 N.P.T. The gas line may be installed through the furnace floor or furnace side to the gas valve.*

**⚠ CAUTION**

*If the gas input to the furnace is too great because of excessive gas pressure, wrong size orifice, high altitude, etc., the burner flame will be sooty and may produce carbon monoxide, which could result in unsafe operation, explosion, and/or fire or asphyxiation.*

**⚠ CAUTION**

*To install gas line and to connect it to the gas valve, care must be taken to hold gas valve firmly to prevent misalignment of the burner orifice, or to damage gas valve which could result in improper heating, explosion, fire or asphyxiation.*
*DO NOT USE EXCESSIVE PIPE SEALANT ON PIPE JOINTS. Pipe sealant, metal chips or other foreign material that could be deposited in the inlet of the gas valve, when gas pipe is installed or carried through the gas piping into the gas valve inlet after installation, may cause the gas valve to malfunction and could result in possible improper heating, explosion, fire or asphyxiation. Also, pipe sealant must be resistant to Propane gas.*
*Where regulations require, a main shut-off valve shall be installed externally of furnace casing. After piping has been installed, turn gas on and check all connections with a leak detector or soap solution.*
*Never use open flame to test for gas leaks as fire or explosion could occur.*
*Do not test the fuel system at more than 14 in. W.C. after furnace has been connected to fuel line. Such testing could void the warranty. Any test run above 14 in. W.C. may damage furnace control valve which could cause an explosion, fire or asphyxiation.*

A drip leg is recommended in the gas supply line to trap moisture and contaminations. See **Figure 14**.

For natural gas operation, the furnace is designed for 7 in. W.C. inlet gas pressure. Pressure to main burner is then reduced to 3 1/2 in. W.C.

### Gas piping installation

Correctly sized wrought iron, approved flexible or steel pipe must be used when making gas connections to the unit. If local codes allow the use of a flexible gas appliance connection, always use a new listed connector. Do not use a connector that has previously serviced another gas appliance.

Some utility companies or local codes require pipe sizes larger than the minimum sizes listed in these instructions and in the codes. The furnace rating plate and the instructions in this section specify the type of gas approved for this furnace - only use those approved gases.

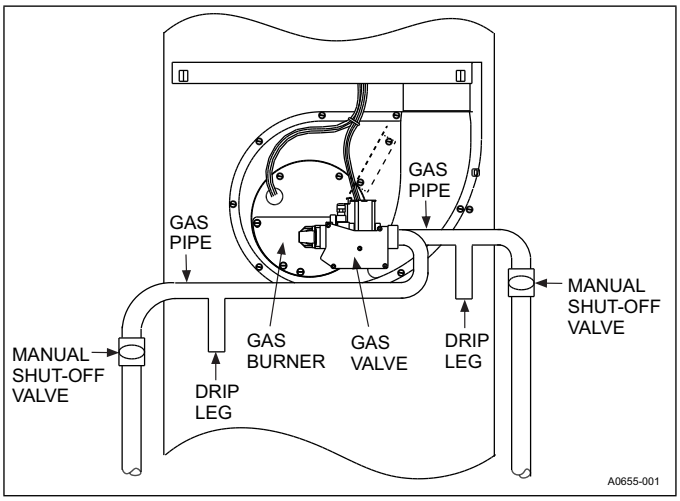


**Figure 15:** Gas piping

**Important:** *An accessible manual shut-off valve must be installed upstream of the furnace gas controls and within 6 ft (1.8 m) of the furnace.*

The furnace must be isolated from the gas supply piping system by closing its individual external manual shut-off valve during any pressure testing of the gas supply piping system at pressures equal to or less than 1/2 psig (3.5 kPa).

**⚠ CAUTION**

*The gas valve body is a very thin casting that cannot take any external pressure. Never apply a pipe wrench to the body of the gas valve when installing piping. A wrench must be placed on the square hub located on the gas inlet side of the valve. Placing a wrench to the body of the gas valve will damage the valve causing improper operation and/or the valve to leak.*

Gas piping may be connected from either side of the furnace using any of the gas pipe entry knockouts on both sides of the furnace. See **Figure 15**.

### Gas orifice conversion for propane (LP)

**⚠ WARNING**

*This conversion shall be installed by a qualified service agency in accordance with the manufacturer's instructions and all applicable codes and requirements of the authority having jurisdiction. If the information in these instructions is not followed exactly, a fire, an explosion or production of carbon monoxide may result causing property damage, personal injury or loss of life. The qualified service agency is responsible for the proper installation. The installation is not proper and complete until the operation of the converted appliance is checked as specified in the manufacturer's instructions.*

**⚠ WARNING**

*Improper installation may damage equipment, can create a shock hazard, and will void the warranty.*

**Important:** *These instructions are for the use of qualified individuals specially trained, experienced and certified in the installation of this type of equipment and related systems components. Installation and service personnel are required by some states to be licensed. Persons not qualified shall not install this equipment nor interpret these instructions.*

**NOTICE**

*The words **shall** or **must** indicate a requirement, which is essential to satisfactory and safe product performance.*
*The words **should** or **may** indicate a recommendation or advice which is not essential and not required but which may be useful or helpful.*

### Contents

- A burner orifice for LP (propane) gas is located in the bag attached to the gas valve. The size is marked on the orifice.
- A conversion tag

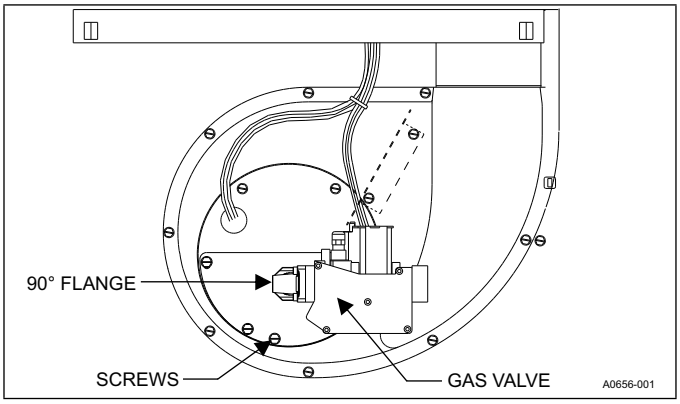


**Figure 16:** Burner assembly

### Conversion procedure

**⚠ CAUTION**

*The gas supply must be shut off prior to disconnecting the electrical power, before proceeding with the conversion.*

**⚠ WARNING**

***SHOCK HAZARD -** Turn off electrical supply to furnace.*

1. Shut off gas supply at valve upstream from furnace or at meter as required. See **Figure 15**.
2. Disconnect gas supply piping from gas valve on furnace.
3. Disconnect electrical wires from gas valve, noting which wires are connected to which terminals.
4. Remove four bolts that attach the gas valve to the 90° flange.

**⚠ CAUTION**

*The rubber O ring provided seals the gas valve to the 90° flange. Make sure it is installed when the gas valve is attached to that flange.*

5. Remove the four screws that attach the gas manifold to the burner support box. See **Figure 16**.
6. Remove the LP (propane) gas burner orifice from the bag attached to the gas valve.
7. Remove the natural gas burner orifice from gas valve, and place it along with the natural gas tag in the orifice bag for future use if the furnace needs to be converted back to natural gas.
8. Install the LP (propane) gas orifice supplied with the furnace. Tighten to 15 in. lb to 25 in. lb of torque.
9. Reinstall the manifold in the assembly by reversing the removal process.
10. Reconnect the wires to the proper terminals on the gas valve.
11. Remove the brass regulator with the blue cap, and turn it upside down so the arrows for LP are pointing down towards valve body. Place the blue cap back on the regulator.
12. Convert the gas valve for LP (propane) gas operation by following the instructions. Remove the natural tag and replace with the propane tag supplied in the orifice bag.
13. Remove the blue conversion label on the furnace door after the furnace has been converted.
14. Reconnect the gas supply piping to the gas valve and insure that all gas connections are tight.
15. Check the gas pressure. See **Checking the gas pressures.**
16. Turn on gas supply to furnace and check all gas connections with suitable leak detector.

**⚠ WARNING**

*Never use an open flame to check for leaks. Fire or explosion could occur. Since some leak solutions including soap and water may cause corrosion or stress cracking, the piping must be rinsed with water after testing unless it has been determined that the leak test solution is non-corrosive.*

**Important:** *When converting gas valve from or to Propane gas, it will be necessary to change main burner orifice to prevent an underfired or overfired condition. See label inside lower furnace door for complete instructions.*

### High altitude gas orifice conversion

This furnace is constructed at the factory for natural gas-fired operation at 0 ft to 2,000 ft (0 m to 610 m) above sea level.

The gas orifices on this furnace must be changed in order to maintain proper and safe operation, when the furnace is installed in a location where the altitude is greater than 2,000 ft (610 m) above sea level on natural gas or the altitude is greater than 4,000 ft (1,219 m) above sea level on propane (LP) gas. See **Table 4** or the instructions in the high altitude conversion kit for the proper gas orifice size.

For propane gas operation, the furnace is designed for 11 in. W.C. inlet gas pressure. Pressure to main burner is then reduced to 10 in. W.C.

The unit may also be converted for altitudes up to 10,000 ft (3048 m) on natural and propane (LP) gas with additional derate as shown in Table 4 or refer to ANSI Z223.1 NFPA 54 National Fuel Gas Code or in Canada CAN/CGA-B149.1-00 Natural Gas and Propane Installation Code.

**⚠ DANGER**

***PROPANE AND HIGH ALTITUDE CONVERSION KITS***

*It is very important to choose the correct kit and/or gas orifices for the altitude and the type of gas for which the furnace is being installed.*

*Only use natural gas in furnaces designed for natural gas. Only use propane (LP) gas for furnaces that have been properly converted to use propane (LP) gas. Do not use this furnace with butane gas.*

*Incorrect gas orifices or a furnace that has been improperly converted will create an extremely dangerous condition resulting in premature heat exchanger failure, excessive sooting, high levels of carbon monoxide, personal injury, property damage, a fire hazard and/or death.*

*High altitude and propane (LP) conversions are required in order for the appliance to satisfactory meet the application.*

*An authorized distributor or dealer must make all gas conversions.*

*In Canada, a certified conversion station or other qualified agency, using factory specified and/or approved parts, must perform the conversion.*

*The installer must take every precaution to insure that the furnace has been converted to the proper gas orifice size when the furnace is installed. Do not attempt to drill out any orifices to obtain the proper orifice size. Drilling out a gas orifice will cause misalignment of the burner flames, causing premature heat exchanger burnout, high levels of carbon monoxide, excessive sooting, a fire hazard, personal injury, property damage and/or death.*

**Table 5:** High altitude duration chart

| Natural gas | | | | | | | | | | | | | |
|---|---|---|---|---|---|---|---|---|---|---|---|---|---|
| **Elevation** | | **56,000 — input** | | | **70,000 — input** | | | **77,000 — input** | | | **90,000 — input** | | |
| **Feet** | **Meters** | **Orifice dia.** | **Drill size** | **Part number** | **Orifice dia.** | **Drill size** | **Part number** | **Orifice dia.** | **Drill size** | **Part number** | **Orifice dia.** | **Drill size** | **Part number** |
| Sea level | | 0.136 | 29 | 9951-1361 | 0.154 | 23 | 9951-1541 | 0.161 | 20 | 9951-1611 | 0.180 | 15 | 9951-1801 |
| 2,000 | 618 | 0.136 | 29 | 9951-1361 | 0.149 | 25 | 9951-1491 | 0.157 | 22 | 9951-1571 | 0.177 | 16 | 9951-1771 |
| 3,000 | 914 | 0.128 | 30 | 9951-1281 | 0.149 | 25 | 9951-1491 | 0.157 | 22 | 9951-1571 | 0.173 | 17 | 9951-1731 |
| 4,000 | 1219 | 0.128 | 30 | 9951-1281 | 0.147 | 26 | 9951-1471 | 0.154 | 23 | 9951-1541 | 0.173 | 17 | 9951-1731 |
| 5,000 | 1524 | 0.128 | 30 | 9951-1281 | 0.144 | 27 | 9951-1441 | 0.152 | 24 | 9951-1521 | 0.169 | 18 | 9951-1691 |
| 6,000 | 1829 | 0.128 | 30 | 9951-1281 | 0.144 | 27 | 9951-1441 | 0.149 | 25 | 9951-1491 | 0.166 | 19 | 9951-1661 |
| 7,000 | 2134 | 0.120 | 31 | 9951-1201 | 0.140 | 28 | 9951-1401 | 0.147 | 26 | 9951-1471 | 0.161 | 20 | 9951-1611 |
| 8,000 | 2438 | 0.120 | 31 | 9951-1201 | 0.136 | 29 | 9951-1361 | 0.144 | 27 | 9951-1441 | 0.161 | 20 | 9951-1611 |
| 9,000 | 2743 | 0.120 | 31 | 9951-1201 | 0.136 | 29 | 9951-1361 | 0.140 | 28 | 9951-1401 | 0.157 | 22 | 9951-1571 |
| 10,000 | 3048 | 0.116 | 32 | 9951-1161 | 0.128 | 30 | 9951-1281 | 0.136 | 29 | 9951-1361 | 0.152 | 24 | 9951-1521 |
| **Propane gas** | | | | | | | | | | | | | |
| **Elevation** | | **56,000 — input** | | | **70,000 — input** | | | **77,000 — input** | | | **90,000 — input** | | |
| **Feet** | **Meters** | **Orifice dia.** | **Drill size** | **Part number** | **Orifice dia.** | **Drill size** | **Part number** | **Orifice dia.** | **Drill size** | **Part number** | **Orifice dia.** | **Drill size** | **Part number** |
| Sea level | | 0.082 | 45 | 9951-0821 | 0.093 | 42 | 9951-0931 | 0.098 | 40 | 9951-0981 | 0.106 | 36 | 9951-1061 |
| 2,000 | 618 | 0.081 | 46 | 9951-0811 | 0.093 | 42 | 9951-0931 | 0.096 | 41 | 9951-0961 | 0.104 | 37 | 9951-1041 |
| 3,000 | 914 | 0.078 | 47 | 9951-0781 | 0.089 | 43 | 9951-0891 | 0.093 | 42 | 9951-0931 | 0.101 | 38 | 9951-1011 |
| 4,000 | 1219 | 0.078 | 47 | 9951-0781 | 0.089 | 43 | 9951-0891 | 0.093 | 42 | 9951-0931 | 0.101 | 38 | 9951-1011 |
| 5,000 | 1524 | 0.078 | 47 | 9951-0781 | 0.089 | 43 | 9951-0891 | 0.093 | 42 | 9951-0931 | 0.099 | 39 | 9951-0991 |
| 6,000 | 1829 | 0.076 | 48 | 9951-0761 | 0.086 | 44 | 9951-0861 | 0.089 | 43 | 9951-0891 | 0.098 | 40 | 9951-0981 |
| 7,000 | 2134 | 0.076 | 48 | 9951-0761 | 0.086 | 44 | 9951-0861 | 0.089 | 43 | 9951-0891 | 0.096 | 41 | 9951-0961 |
| 8,000 | 2438 | 0.073 | 49 | 9951-0731 | 0.082 | 45 | 9951-0821 | 0.086 | 44 | 9951-0861 | 0.096 | 41 | 9951-0961 |
| 9,000 | 2743 | 0.073 | 49 | 9951-0731 | 0.081 | 46 | 9951-0811 | 0.086 | 44 | 9951-0861 | 0.093 | 42 | 9951-0931 |
| 10,000 | 3048 | 0.070 | 50 | 9951-0700 | 0.078 | 47 | 9951-0781 | 0.082 | 45 | 9951-0821 | 0.089 | 43 | 9951-0891 |

Table shows 4% Input Reduction per 1,000 ft elevation. Reference Source: NFPA No. 54, ANSI Z 223.1, National Fuel Gas Code.
For Canadian installation, no orifice or manifold pressure reduction is required for 0-4, 500ft.

# Section VI: Electrical power

## Electrical power connections

Field wiring to the unit must be grounded. Electric wires that are field installed shall conform to the temperature limitation for 63°F (35°C) rise wire when installed in accordance with instructions. See **Table 5** in these instructions for specific furnace electrical data.

**⚠ CAUTION**

*Use copper conductors only.*

## Supply voltage connections

1. Provide a power supply separate from all other circuits. Install overcurrent protection and disconnect switch per local/national electrical codes. The switch should be close to the unit for convenience in servicing. With the disconnect or fused switch in the OFF position, check all wiring against the unit wiring label. Refer to the wiring diagram in this instruction.
2. Remove the screws holding the wiring box cover. Route the power wiring through the opening in the unit into the junction box with a conduit connector or other connection. In the junction box there are three wires: a black, a white, and a green wire. Connect the power supply as shown on the unit wiring label on the inside of the blower compartment door or the wiring schematic in this section.

The black furnace lead must be connected to the L1 (hot) wire from the power supply. The white furnace lead must be connected to neutral. Connect the green furnace lead (equipment ground) to the power supply ground.

3. The furnace's control system requires correct polarity of the power supply and a ground connection. See **Figure 17**.

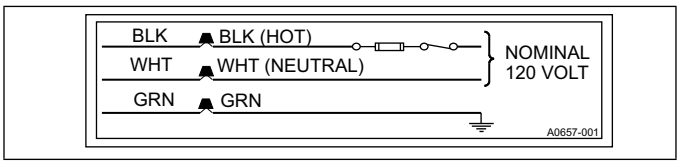


**Figure 17:** Line wiring connections

## Low voltage control wiring connections

1. Insert 24 V wires through the small plastic bushing just above the control panel.
2. Connect the thermostat wires to the furnace low voltage pigtails. See **Figure 18** (heating only), and **Figure 19** or **Figure 20** (heating and cooling).
3. Connect thermostat wires to the furnace when installing blend air accessory as shown in **Figure 21**.
4. Connect low-voltage circuit to the wall thermostat pigtails.

**NOTICE**

*Use a five-conductor thermostat cable for all installations to allow easy installation of an air conditioning system at a later time.*

**Important:** *Set the heat anticipator in the room thermostat to 0.4 A. Setting it lower causes short cycles. Setting it higher causes the room temperature to exceed the set points.*

**Use an 18 AWG thermostat wire.** Only use a smaller gauge thermostat wire if the guideline below is followed.

| Thermostat wire length (ft) - furnace to thermostat | Thermostat wire gauge (AWG) |
|---|---|
| 0 to 45 | 22 |
| 0 to 70 | 20 |

Do not use a thermostat wire smaller than 22 AWG. If using a thermostat wire smaller than 18 AWG, ensure that the connections between the different wire sizes are tight. Operational problems may be caused by loose connections or by using a thermostat wire that is too small to carry the required load.

Any such problems are the responsibility of the installer.

A separate 115 V.A.C. supply circuit must be used for the furnace. Protect he circuit with a 15 A fuse or circuit breaker.

Avoid locations where the thermostat could be subject to drafts from outside, exposed to direct light from lamps, sun, and fireplaces, or affected by air from a duct register blowing directly on the thermostat.

Locate the wall thermostat 52 in. to 66 in. above the floor, preferably on an inside wall situated in an area with good air circulation, and where the temperature is reasonably representative of other living areas the thermostat is controlling.

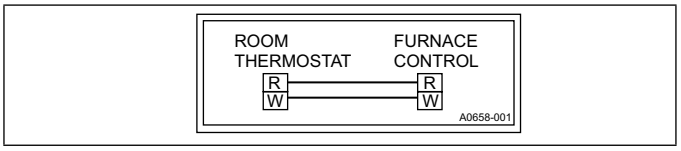


**Figure 18:** Wiring for heat only thermostat

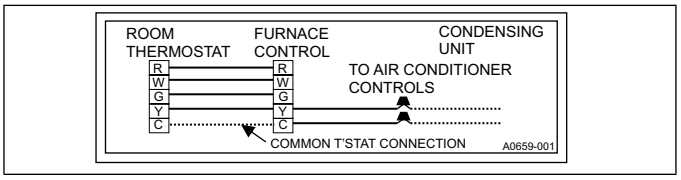


**Figure 19:** Wiring for electronic heat-cool thermostat

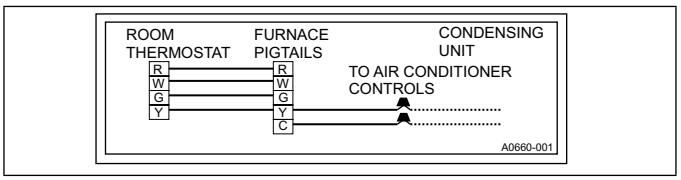


**Figure 20:** Wiring for standard heat-cool thermostat

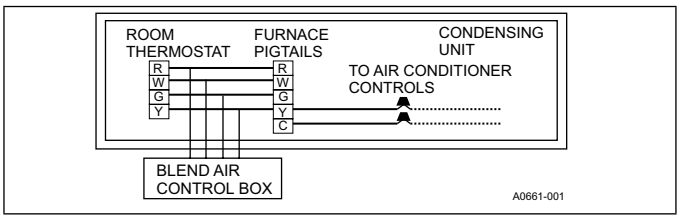


**Figure 21:** Wiring for blend air accessory

**Table 6:** Ratings and physical and electrical data

| Input | | Output | | Nominal airflow | | Cabinet width | | AFUE | Air temperature rise | | Operation weight | |
|---|---|---|---|---|---|---|---|---|---|---|---|---|
| MBH | kW | MBH | kW | CFM | $m^3$/min | In. | cm | % | °F | °C | lb | kg |
| 56 | 16 | 45 | 13 | 741 | 21.0 | 19-1/2 | 49.5 | 80.0 | 45 - 75 | 25 - 41.7 | 163 | 73.9 |
| 70 | 21 | 56 | 16 | 923 | 26.1 | 19-1/2 | 49.5 | 80.0 | 45 - 75 | 25 - 41.7 | 163 | 73.9 |
| 77 | 23 | 62 | 18 | 998 | 28.3 | 19-1/2 | 49.5 | 80.0 | 45 - 75 | 25 - 41.7 | 163 | 73.9 |
| 90 | 26 | 72 | 21 | 1164 | 33.0 | 19-1/2 | 49.5 | 80.0 | 45 - 75 | 25 - 41.7 | 163 | 73.9 |
| **Input** | | **Max. outlet air temperature** | | **Blower** | | **Blower size** | | **Total unit** | **Ignitor** | **Booster motor and gas valve** | **Fuse or circuit breaker** | **Gas pipe connection NPT (in.)** |
| MBH | kW | °F | °C | HP | A | in. | cm | A | A | A | A | |
| 56 | 16 | 165 | 73.9 | 1/2 | 1.7 | 10 x 8 | 25.4 x 20.3 | 3.4 | 4.1 | 0.6 | 15 | 1/2 |
| 70 | 21 | 165 | 73.9 | 1/2 | 2.8 | 10 x 8 | 25.4 x 20.3 | 4.5 | 4.1 | 0.6 | 15 | 1/2 |
| 77 | 23 | 165 | 73.9 | 1/2 | 3.3 | 10 x 8 | 25.4 x 20.3 | 5.0 | 4.1 | 0.6 | 15 | 1/2 |
| 90 | 26 | 165 | 73.9 | 1/2 | 4.8 | 10 x 8 | 25.4 x 20.3 | 6.5 | 4.1 | 0.6 | 15 | 1/2 |

Annual Fuel Utilization Efficiency (AFUE) numbers are determined in accordance with DOE Test procedures.
Nominal airflow values shown are based on heating speed taps chosen for Fan Efficiency Rating test.
Wire size and over current protection must comply with the National Electrical Code (NFPA-70-latest edition) and all local codes.
The furnace shall be installed so that the electrical components are protected from water.

# Section VII: Roof jack vent or combustion air system

## Vent and combustion air safety

This Category I furnace is designed for manufactured (mobile) home and modular home application. It may be installed without modification in a garage, equipment room, alcove or any other indoor location where all required clearance to combustibles and other restrictions are met, and providing factory roof jack system meets all installation requirements.

The venting system must be installed in accordance with Section 5.3: Air for Combustion and Ventilation of the National Fuel Gas CodeZ223.1/NFPA 54 (latest edition), or Sections 7.2, 7.3 or 7.4 of CAN/CGA B149.1-00, National Gas and Propane Codes (latest edition) or applicable provisions of the local building code and these instructions. The furnace shall not be connected to any chimney, a flue serving a separate appliance, or any appliance designed to burn solid fuel. The furnace rating plate lists the maximum vent gas temperature.

It is recommended that the appliance is installed in a location where the space temperature is 32°F (0°C) or higher. If the appliance is installed in a location where the ambient temperature is below 32°F (0°C), the combustion by-products could condense causing damage to the appliance heat exchanger or the roof jack.

**Important:** *The vent system must be installed as specified in these instructions for manufactured (mobile) home and modular homes. This appliance must be vented with an approved roof jack may not be common vented with another gas appliance*.

Modular homes must be vented with an approved roof jack and may not be common vented with other appliances.

**⚠ WARNING**

*Failure to follow all venting instructions can result in fire, asphyxiation, or explosion.*

**⚠ CAUTION**

*Only use the appropriate roof jack. See **Figure 21** and **Figure 22** for correct application.*

*Do not exceed the maximum height as determined from **Figure 21** and **Figure 22**. Installer should allow an additional 1 1/2 in. travel before the flue pipe assembly is fully extended against the built-in stop. This provides an additional safeguard against the flue assembly being pulled from the roof jack during transportation or other stress conditions.*

## Existing furnace replacement

Perform these steps if this furnace replaces an existing furnace:

1. If a second roof, roof cap or addition has been made to the existing roof of the home, remove the old roof jack completely. To avoid the possibility of an incorrectly installed pipe or gaps in the old roof jack, install a new roof jack. Your ceiling and roof height determines the correct roof jack to use. Refer to the vent selection table of the furnace installation instructions.
2. After unpacking the roof jack, check the rain caps. Ensure that they are not damaged, tilted or crooked. Do not twist, crush or sit on the roof caps during installation. Damaged roof caps cause incorrect furnace operation. The furnace does not heat properly and could result in explosion.
3. Before inserting the roof jack into the furnace top, inspect the furnace flue and combustion air opening for debris or insulation which might have fallen in during pre-installation steps. Do not proceed unless all debris has been cleaned out or removed.
4. After installing roof jack on furnace top collar, make sure that there is no gap in back or side between the pipe collar and the furnace casing top.
5. Use only the pipes provided with the roof jack assembly. Do not add to or adapt other sheet metal pipes. Do not cut, insert or add other pipes to this assembly.
6. Ensure that no gaps are present between sections of the flue pipe or the combustion air pipe.

## New home installation

Perform these steps if this furnace is installed in a new home:

1. Inspect the furnace top collars for signs of insulation or ceiling debris which might have fallen in during cutting of the ceiling and roof holes. Remove all debris before continuing.
2. After unpacking the roof jack, check the rain caps. Ensure that they are not damaged, tilted or crooked. Do not twist, crush or sit on the roof caps during installation. Damaged roof caps cause incorrect furnace operation. The furnace does not heat properly and could result in explosion.
3. Before inserting the vent pipe into the furnace top, inspect the furnace flue and combustion air opening for debris or insulation which have fallen in during pre-installation steps. Do not proceed unless all debris have been cleaned out or removed.
4. After installing roof jack on furnace top collar, make sure that there is no gap in back or side between the pipe collar and the furnace casing top.

## Installation in snow regions

When the combustion air pipe inlet is covered or blocked with snow, the furnace does not operate correctly due to the depleted combustion air supply.

Therefore, if you locate the furnace in regions where snow accumulation on the roof exceeds 4 in. or in H.U.D. Snow Load Zones, use a roof jack extension (Part No. 7680B6541).

## Installing the roof jack in the roof

To facilitate the correct installation of the roof jack, the roof jack opening in the ceiling and the roof must be on the same vertical center line as the furnace flue collar. See **Figure 22** or **Figure 23** for dimensional requirements.

**Note:** If the furnace was installed during construction, cover the furnace and flue opening to prevent debris from entering the flue when cutting the hole for the roof jack.

Secure the roof jack to the furnace before the roof flange (flashing) is secured to the roof. This ensures a better alignment of the flue pipe and furnace flue collar. Caulk around and under the roof flange to provide a water tight seal, before securing the roof jack flashing to the roof.

1. Provide protection for vent connector and air-intake connector from damage and debris.
2. Mark the roof jack center line on ceiling. Cut a 5 in. radius (10 in. diameter) hole through the ceiling.
3. Mark the roof jack center line on the roof. Cut an oblong hole through the roof.
4. Insert the roof jack through the roof opening. Do not secure the roof jack to the roof.

### Connect the roof jack to the furnace

1. Verify gasket is around outside of air-intake connector. Install new gasket if missing or damaged.
2. Pull the roof jack's telescoping section down onto furnace. Fully engage the roof jack onto vent connector and air-intake connector and compress gasket. See **Figure 25**. Refer to *Interior roof jack extension* installation instructions, if applicable.
3. Align the holes in roof jack and air-intake connector. Secure the roof jack to the furnace using a #10 x 1/2 in. - 1 1/2 in. Type AB or Type B sheet metal screw.

### Secure roof jack to roof

1. Apply caulk or other sealant to underside of roof jack flashing.
2. Locate roof jack such that pipes are plumb.
3. Secure roof jack flashing with nails, screws or staples.
4. Install roofing material over roof jack flashing.
5. Seal roof jack swivel joint with BOSS® 125 Multi-Seal® or Chem-Calk® 900 Sealant. Not required for roof jacks with fixed slant flashing.

### Complete installation as required

Install the exterior roof jack extension, if applicable. See *Exterior roof jack extension* and ***Figure 24***.

| SWIVEL FLASHING ADJUSTS FROM 0/12 TO 5/12 PITCH | DGAX FURNACES INSTALLATION DIMENSIONS "B" ADJUSTABLE HEIGHT |
|---|---|
| 4000-7101/C | 86" to 95" |
| 4000-7121/C | 91" to 102" |
| 4000-7141/C | 99" to 120" |
| 4000-7151/C | 106" to 132" |

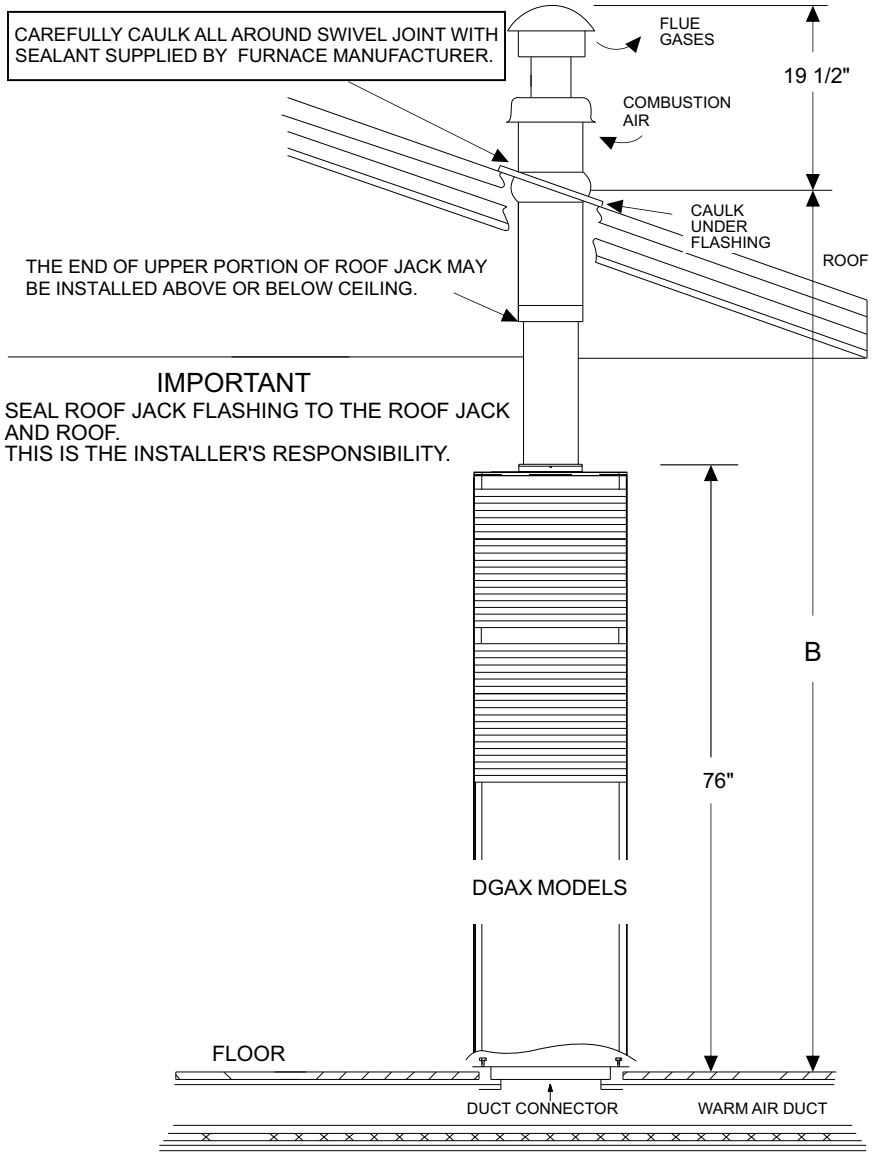


**Figure 22:** Standard roof jack

| SWIVEL FLASHING ADJUSTS FROM 0/12 TO 5/12 PITCH | DGAX FURNACES |
|---|---|
| | INSTALLATION DIMENSIONS |
| | “B” ADJUSTABLE HEIGHT |
| 4000-8161/C | 101" to 117" |
| 4000-8181/C | 115" to 145" |

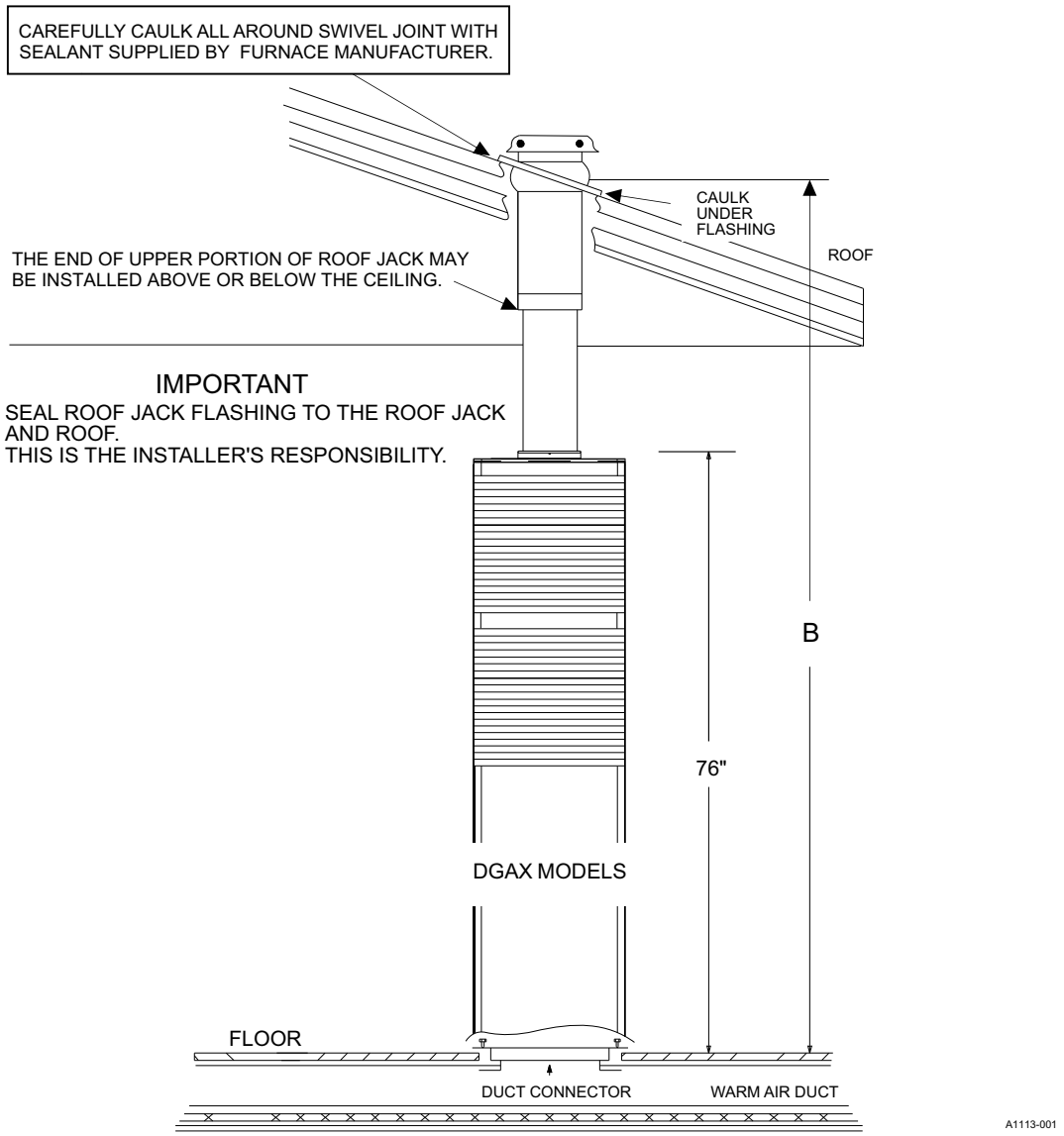


**Figure 23:** Roof jack with removable crowns

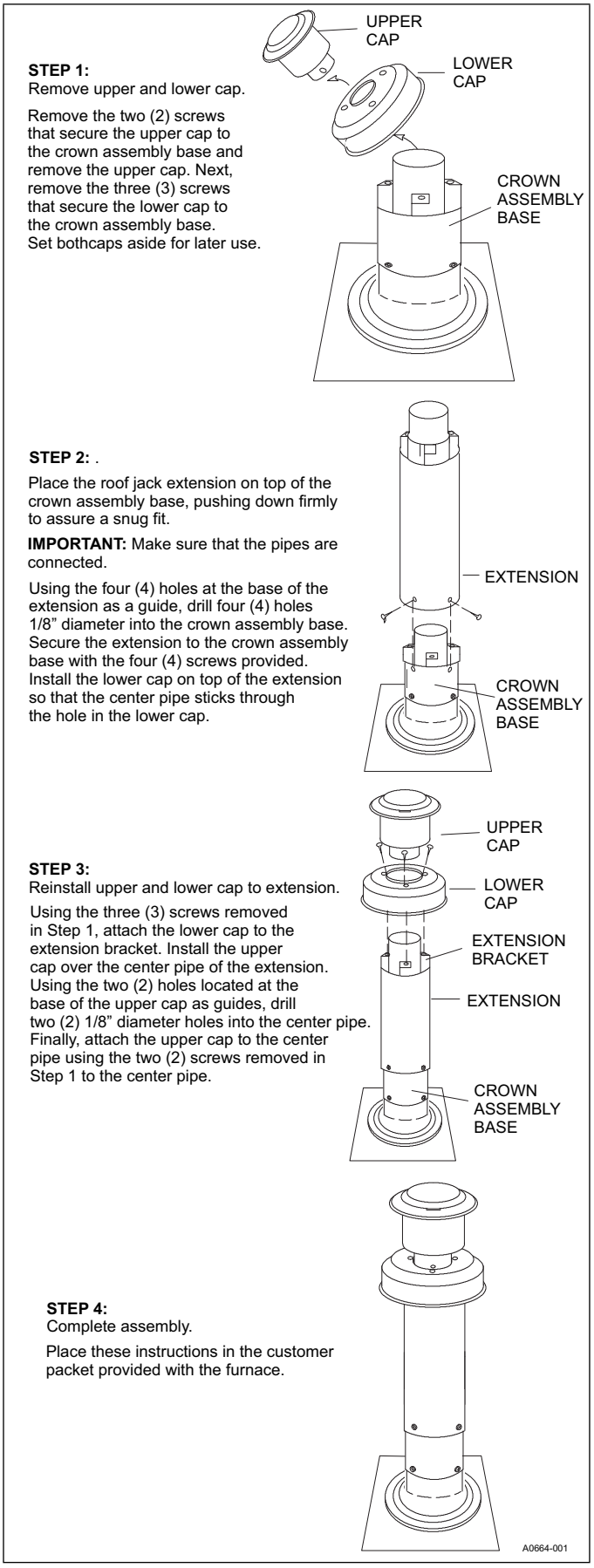


**Figure 24:** Roof jack

## Exterior roof jack extension

An exterior roof jack extension is available to comply with instances in which the roof jack crown needs to be raised to meet a roof clearance requirement. One extension will raise the roof jack crown by 18 in. Only one exterior extension per furnace can be used.

## Connecting roof jack to furnace

**⚠ CAUTION**

*The inner flue pipe must be present.*

*It is mandatory that the combustion air pipe and flue pipe assembly be fully engaged. The combustion air pipe **must** be securely fastened to the furnace with a sheet metal screw in the hole provided.*

*Use a 1/2 in. blunt or sharp end sheet metal screw to fasten roof jack combustion air pipe to furnace combustion air collar. Screw hole is provided in the pipe and collar. Excessively long screws may extend to flue pipe and puncture it. Screws are not to exceed 1 1/2 in. in length.*

**NOTICE**

*Combustion air tube and flue pipe are part of the same assembly. Only the combustion air tube need be fastened to the furnace.*

1. Make sure that the flue pipe and combustion air tube are present.
2. Pull the telescoping flue tube and combustion air tube assembly down from the roof jack. Slide the flue tube/combustion air tube assembly down firmly over the furnace flue outlet and combustion air collar. Insure that the back, side and front of combustion air tube collar is fully engaged and is in contact with gasket. Fasten the combustion air tube to the furnace combustion air collar using a 1/2 in. sheet metal screw. A screw hole is provided in combustion air tube and furnace combustion air collar. See *Figure 25*.

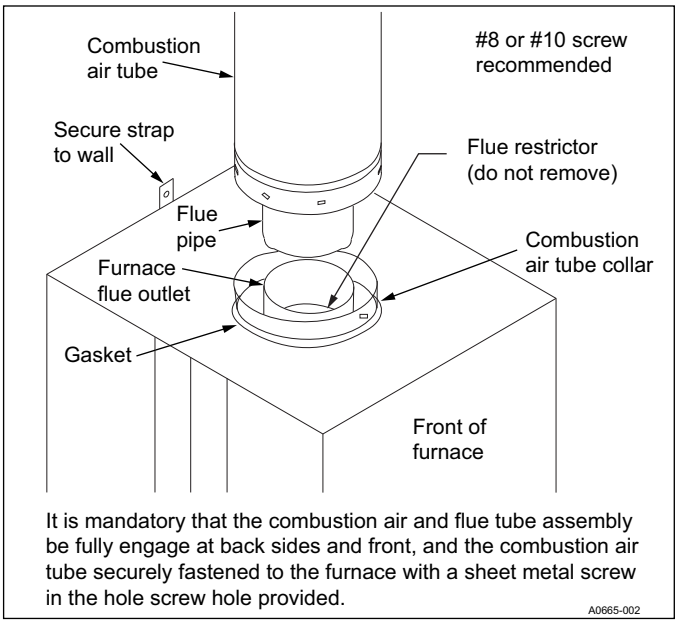


**Figure 25:** Connecting roof jack to furnace

### Combustion and ventilation air

This furnace is a sealed combustion (direct vent) unit and is design certified to use only a 4000 Series roof jack. These roof jacks are designed to provide combustion air to the furnace and to exhaust flue products to the outside. No other combustion air openings or ducts are needed.

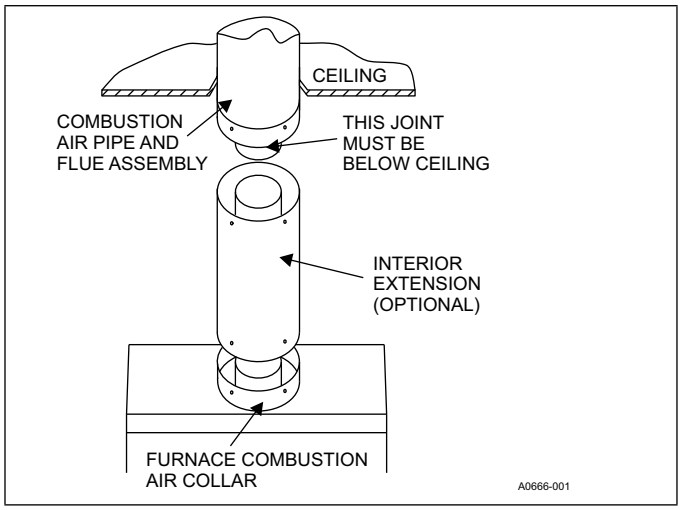


**Figure 26:** Roof jack assembly

### Interior roof jack extensions

To choose the correct length roof jack with or without the optional extension, see **Figure 26** and **Table 6**. More than one interior extension may be used to accommodate dimensions up to 110 in. (284.5 cm).

**⚠ WARNING**

*The joint where the optional interior extension connects to the roof jack must be below the ceiling. Failure to observe this requirement may result in asphyxiation, fire, or explosion*

**NOTICE**

*Use of an interior extension will increase the roof jack adjustable heights by the amount of the interior extension height. If the furnace is installed on an elevated plenum, the plenum height must be added to the roof jack height.*

**⚠ CAUTION**

*Do not exceed the maximum adjustable height as listed in Table 6. These maximum heights allow an additional 1 1/2 in. (3.81 cm) travel before the flue pipe assembly is fully extended against the built-in stop. This provides an additional safeguard against the flue assembly being pulled from the roof jack if upward movement should occur when the home is being transported or subjected to other stress conditions. Failure to follow these instructions may result in fire, explosion, or asphyxiation.*

**⚠ CAUTION**

*Use 1/2 in. (1.27 cm) blunt or sharp end sheet metal screws to fasten roof jack combustion air pipe to furnace combustion air collar Screw holes are provided in pipe and collar. Excessively long screws may extend to flue pipe and puncture it. If substitute screws are used, they must not exceed 1 1/2 in. (3.81 cm) in length. It is mandatory that the combustion air and flue tube assembly be properly engaged, and the combustion air pipe fastened to the furnace with sheet metal screws in the holes provided.*

**Table 7:** Extensions

| Extension model number | Extension (in.) | Extension type |
|---|---|---|
| 7680B6541 | 18 | Exterior |
| 7900A6111 | 11 | Interior |
| 7900A6171 | 17 | Interior |

If you use an optional interior extension, place the extension down on the furnace top and mate with furnace flue and combustion air collar until it lines up with screw holes in combustion air collar. Secure the extension to the furnace using the pre-punched holes. Use 1/2 in. (1.27 cm) blunt or sharp end sheet metal screws to fasten roof jack combustion air pipe to furnace combustion air collar. Screw holes are provided in pipe and collar. Excessively long screws may extend to flue pipe and puncture. it. If substitute screws are used, they must not exceed 1 1/2 in. (3.8a cm) in length. Pull the roof jack flue and combustion air pipe assembly down and mate with extension flue and combustion air pipes until the screw holes line up. See Figure 26. Fasten interior extension to combustion air pipe assembly with sheet metal screws not exceeding 1 1/2 in. (3.8 cm) in length.

**Important:** *Under no circumstances shall the connection between the flue and combustion air pipe assembly of the roof jack and the interior extension be above the ceiling line.*

Secure the roof jack to the roof with screws. Non-hardening mastic sealer or caulking compound must be used to seal the roof flange to prevent water leakage. The roof jack swivel joint must also be sealed to prevent water leakage.

### Installing ceiling ring

The ceiling ring must meet fire stop requirements. The accessory ceiling ring may be used, see **Figure 27**, or the mobile home or modular home manufacturer or the installer may use other approved methods to fire stop. If required, three sections of the accessory ring may be used as in **Figure 27** to provide closer clearance around the roof jack.

**NOTICE**

*A portion of the outer edge of the ceiling ring may be trimmed so the ring will fit between the warm air plenum and roof jack.*

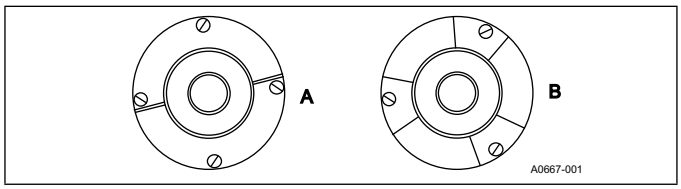


**Figure 27:** Ceiling rings

## Vent clearances

**Important:** *The vent must be installed with the minimum clearances as shown in* **Figure 28** *and must comply with local, state, regional codes and requirements.*

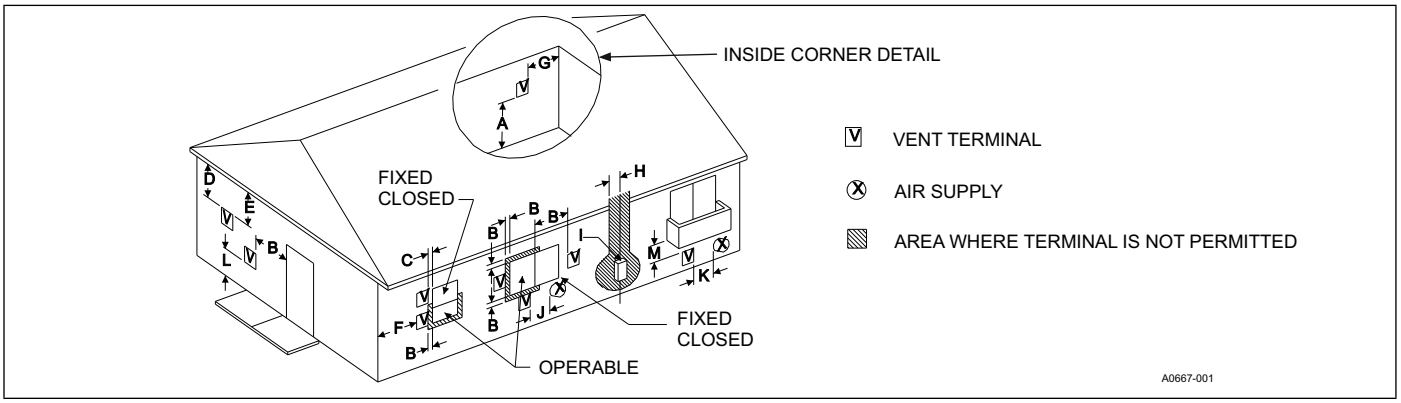


**Figure 28:** Home layout

| | Canadian installations[1] | US installation[2] |
|---|---|---|
| A. Clearance above grade, veranda, porch, deck, or balcony | 12 in. (30 cm) | 12 in. (30 cm) |
| B. Clearance to window or door that may be opened | 12 in. (30 cm) for models <100,000 Btu/h (30 kW), 36 in. (91 cm) for models > 100,000 Btu/h (30 kW) | 4 ft |
| C. Clearance to permanently closed window | 4 ft | 4 ft |
| D. Vertical clearance to ventilated soffit located above the terminal within a horizontal distance of 2 feet (61 cm) from the center line of the terminal | 4 ft | 4 ft |
| E. Clearance to unventilated soffit | 12 in. | 12 in. |
| F. Clearance to outside corner | 12 in. | 12 in. |
| G. Clearance to inside corner | 6 ft | 6 ft |
| H. Clearance to each side of center line extended above meter/regulator assembly | 3 ft (91 cm) within a height 15 ft (4.5 m) above the meter/regulator assembly | 3 ft (91 cm) within a height 15 ft (4.5 m) above the meter/regulator assembly |
| I. Clearance to service regulator vent outlet | 3 ft (91 cm) | 3 ft (91 cm) |
| J. Clearance to nonmechanical air supply inlet to building or the combustion air inlet to any other appliance | 12 in. (30 cm) for models <100,000 Btu/h (30 kW), 35 inches (91 cm) for models >100,000 Btu/h (30 kW) | 4 ft |
| K. Clearance to a mechanical supply inlet | 6 ft (1.83 m) | 3 ft (91 cm) above if within 10 ft (3 cm) horizontally |
| L. Clearance above paved sidewalk or paved driveway located on public property | 7 ft (2.13 m) † | 7 ft (2.13 m) † |
| M. Clearance under veranda, porch, deck, or balcony | 12 in. (30.4 cm) | 12 in. (30.4 cm) |
| Vent Termination from any Building Surface | 12 in. (30.4 cm) | 12 in. (30.4 cm) |
| Above anticipated snow depth | 12 in. (30.4 cm) | 12 in. (30.4 cm) |

1. In accordance with the current CSA B149.1-00, Natural Gas and Propane Installation Code.
2. In accordance with the current ANSI Z223.1 / NFPA 54, National Gas Code. In accordance with the current UL 311 Standard for Safety for roof jacks for manufactured homes and recreational vehicles.

† A vent shall not terminate directly above a sidewalk or paved driveway that is located between two single family dwellings and serves both dwellings.

‡ Permitted only if veranda, porch, deck, or balcony is fully open on a minimum of two sides beneath the floor. For clearance not specified in ANSI Z223.1 / NFPA 54 or CSA B149.1-00.

** Clearance in accordance with local installation codes and the requirements of the gas supplier and the manufacturer's Installation Manual.

Any fresh air or make up inlet for dryer or furnace area is considered to be forced air inlet.

Avoid areas where condensate drippage may cause problems such as above planters, patios, or adjacent to windows where steam may cause fogging.

A terminus of a vent shall be either:
Fitted with a cap in accordance with the vent manufacturer's installation instructions, or In accordance with the installation instructions for a special venting system.

Responsibility for the provision of proper adequate venting and air supply for application shall rest with the installer.

Vent shall extend high enough above building, or a neighboring obstruction, so that wind from any direction will not create a positive pressure in the vicinity of the vent.

## ⚠ WARNING

***CARBON MONOXIDE POISONING HAZARD***

*Failure to follow the steps outlined below for each appliance connected to the venting system being placed into operation could result in carbon monoxide poisoning or death.*

*The following steps shall be followed for each appliance connected to the venting system being placed into operation, while all other appliances connected to the venting system are not in operation:*

1. Inspect the venting system for proper size and horizontal pitch. Determine that there is no blockage, restriction, leakage, corrosion or other deficiencies, which could cause an unsafe condition
2. Close all building doors and windows and all doors.
3. Turn on clothes dryers and TURN ON any exhaust fans, such as range hoods and bathroom exhausts, so they shall operate at maximum speed. Open the fireplace dampers. Do not operate a summer exhaust fan.
4. Follow the lighting instructions. Place the appliance being inspected in operation. Adjust thermostat so the appliance shall operate continuously.
5. Test each appliance (such as a water heater) equipped with a draft hood for spillage (down-draft or no draft) at the draft hood relief opening after 5 minutes of main burner operation. Appliances that do not have draft hoods need to be checked at the vent pipe as close to the appliance as possible. Use a combustion analyzer to check the CO2 and CO levels of each appliance. Use a draft gauge to check for a downdraft or inadequate draft condition.
6. After it has been determined that each appliance properly vents when tested as outlined above, return doors, windows, exhaust fans, fireplace dampers and any other gas burning appliance to their normal condition.
7. If improper venting is observed during any of the above tests, a problem exists with either the venting system or the appliance does not have enough combustion air (Supply Air from outside) to complete combustion. This condition must be corrected before the appliance can function safely.

**NOTE:** An unsafe condition exists when the CO reading at the furnace vent exceeds 40 ppm and the draft reading is not in excess of - 0.1 in. W.C. (-25 kPa) with all of the appliance(s) operating at the same time.

8. Any corrections to the venting system and / or to the supply (outside) air system must be in accordance with the National Fuel Gas Code Z223.1 or CAN/CGA B149.1-00 Natural Gas and Propane Installation Code (latest editions). If the vent system must be resized, follow the appropriate tables in Appendix G of the above codes or for this appliance.

### Fan-assisted combustion system

An appliance equipped with an integral mechanical means to either draw or force products of combustion through the combustion chamber and/or heat exchanger.

## Section VIII: Start-up and adjustments

**The initial start-up of the furnace requires the following additional procedures.**

**Important:** *All electrical connections made in the field and in the factory must be checked for correct tightness.*

When the gas supply is initially connected to the furnace, the gas piping may be full of air. To purge this air, loosen the ground union until you detect the odor of gas. When gas is detected, immediately retighten the union and check for leaks. Allow 5 min for any gas to dissipate before continuing with the start-up procedure. Make sure that correct ventilation is available to dilute and carry away any vented gas.

### Tools and information required to correctly perform the furnace start-up procedure

- Call the local gas supplier to obtain the heating value of the natural gas. If you cannot obtain the heating valve of the gas from the gas supplier, use a default value of 1030 Btu/SCF (38.8 MJ/m³).
- You need a thermometer or portable digital thermometer to read the supply and return air temperatures.
- You need a U-tube manometer or digital equipment that has the ability to read pressures between 0 in. W.C. to 15 in. W.C. (0 kPa to 3.73 kPa) to measure the gas line and the manifold pressures.
- You need a 3/32 in. Allen wrench for the pressure port plugs in the gas valve.
- You need two pieces of 1/8 in. (0.3 cm) ID flexible tubing that is 12 in. (30 cm) in length, two pieces of 1/8 in. (0.3 cm) tubing that are 4 in. (10.0 cm) in length, and a 1/8 in. (0.3 cm) adapter to connect the U-tube manometer or the digital pressure measuring equipment to the gas valve pressure ports.

There is an accessory kit (1PK0601) available from Source 1, which has the following items:

- One 12 in. (30 cm) length x 1/8 in. (0.3 cm) diameter tubing
- Two pieces of 4 in. (10 cm) length x 1/8 in. (0.3 cm) diameter tubing
- One 5/16 in. (0.8 cm) tee
- One 5/1 6 in. (0.8 cm) x 1/8 in. (0.3 cm) reducing coupling
- One 1/8 in. (0.3 cm) adapter

There is a accessory kit (1PK0602) available from Source 1, which has the following items:

- 12 in. (30 cm) length x 1/8 in. (0.3 cm) diameter tubing
- Two pieces of 4 in. (10 cm) length x 1/8 in. (0.3 cm) diameter tubing
- One 5/16 in. (0.8 cm) tee
- One 5/16 in. (0.8 cm) x 1/8 in. (0.3 cm) reducing coupling
- One 1/8 in. (0.3 cm) adapter
- One Dwyer – Manometer

These items are required in order to correctly perform the start-up procedure.

### Ignition system sequence

1. Turn on the gas supply at the external valve and the main gas valve.
2. Set the thermostat above room temperature to call for heat.
3. System start-up occurs as follows:
   a. The induced draft blower motor starts and comes up to speed. Shortly after inducer start-up, the hot surface igniter glows for about 30 s.
   b. After this warm up, the ignition module energizes (opens) the main gas valve.
   c. After flame is established, the supply air blower starts in the time set on the control board.

**⚠ WARNING**

***FIRE OR EXPLOSION HAZARD***

*Failure to follow the safety warnings exactly could result in serious injury, death or property damage.*

*Never test for gas leaks with an open flame. Use a commercially available soap solution made specifically for the detection of leaks to check all connections. A fire or explosion may result causing property damage, personal injury or loss of life.*

**Important:** *Burner ignition may not be satisfactory on first start-up due to residual air in the gas line or until gas manifold pressure is adjusted. The ignition control makes three attempts to light before locking out.*

With furnace in operation, check all of the pipe joints, gas valve connections and manual valve connections for leakage using an approved gas detector, a non-corrosive leak detection fluid, or other leak detection methods. Take appropriate steps to stop any leak. If a leak persists, replace the component.

The furnace and its equipment shut-off valve must be disconnected from the gas supply piping system during any pressure testing of that system at test pressures in excess of 1/2 PSI (3.45 kPa).

The furnace must be isolated from the gas supply piping system by closing the equipment shut-off valve during any pressure testing of the gas supply piping system.

### Calculating the furnace input (natural gas)

**NOTICE**

*Burner orifices are sized to provide proper input rate using natural gas with a heating value of 1030 Btu/ft$^3$. If the heating value of your gas is significantly different, it may be necessary to replace the orifices.*

1. Turn off all other gas appliances connected to the gas meter.
2. At the gas meter, measure the time (with a stop watch) it takes to use 2 cu ft (0.0566 m$^3$) of gas.
3. Calculate the furnace input by using one of the following equations:

**In the United States, use the following formula to calculate the furnace input.**

For natural gas multiply the heat content of the gas Btu/SCF or Default 1030 Btu/SCF (38.4 MJ/m$^3$), times 2 cu ft (0.056 m) of gas measured at the gas meter, times a barometric pressure and temperature correction factor of 0.960; times 3600, then divided by the time (In seconds) it took to measure 2 cu ft (0.056 m) of gas from the gas meter.

For propane (LP) gas multiply the heat content of the gas Btu/SCF or Default 2500 Btu/SCF (93.15 MJ/m$^3$), times 1 cu ft (0.028 m) of gas measured at the gas meter, times a barometric pressure and temperature correction factor of 0.960; times 3600, then divided by the time in seconds it took to measure 1 cu ft (0.028 m) of gas from the gas meter.

**The formula for US input calculation using a cubic foot gas meter:**

| | | | | | |
|---|---|---|---|---|---|
| Btu/cu ft x 2 cu ft x 0.960 x 3600 / Seconds it took to measure the 2 cu ft of gas | = | BTU/H | Btu/cu ft x 1 cu ft x 0.960 x 3600 / Seconds it took to measure the 1 cu ft of gas | = | BTU/H |
| **Natural gas input calculation**<br>Example:<br>1030 x 2 x 0.960 x 3600 / 90.5<br>Natural gas<br>1030 Btu/SCF | = | 78,666.90 | **Propane (LP) gas input calculation**<br>Example:<br>2500 x 1 x 0.960 x 3600 / 108<br>Propane gas<br>2500 Btu/SCF | = | 80,000.00 |

**In Canada, use the following formula to calculate the furnace input if you are using a cubic foot gas meter.**

For Natural Gas, multiply the heat content of the gas MJ/m$^3$ (or Default 38.4), times 2 cu ft of gas x 0.028 to convert from cubic feet to cubic meters measured at the gas meter, times a barometric pressure and temperature correction factor of 0.960; times 3600, then divided by the time it took to measure 2 cu ft (0.056 m) of gas from the gas meter.

For Propane (LP) Gas, multiply the Heat content of the gas MJ/m$^3$ (or Default 93.15), times 1 cu ft of gas x 0.028 to convert from cubic feet to cubic meters measured at the gas meter, times a barometric pressure and temperature correction factor of 0.960; times 3600, then divided by the time it took to measure 1 cu ft (0.028 m) of gas from the gas meter.

**The formula for metric input calculation using a cubic foot gas meter:**

| | | | | | | | | | | |
|---|---|---|---|---|---|---|---|---|---|---|
| MJ/m$^3$ x 2 cu ft x 0.028 x 0.960 x 3600 / Seconds it took to measure the 2 cu ft of gas | = | MJ/h | x | 0.2777 | = | kW | x | 3412.14 | = | Btu/h |
| **Natural gas input calculation**<br>Example:<br>38.4 x 2 x 0.028 x 0.960 x 3600 / 90.5<br>Natural gas<br>1030 Btu/SCF = 38.4 MJ/m$^3$ | = | 82.12 | x | 0.2777 | = | 22.80 | x | 3412.14 | = | 77,796.80 |
| **Propane (LP) gas input calculation**<br>Example:<br>93.15 x 1 x 0.028 x 0.960 x 3600 / 108<br>Propane gas<br>2500 Btu/SCF = 93.15 MJ/m$^3$ | = | 83.46 | x | 0.2777 | = | 23.18 | x | 3412.14 | = | 79,093.4 |

**In Canada, use the following formula to calculate the furnace input if you are using a gas meter that measures cubic meters.**

For natural gas multiply the Heat content of the gas MJ/$m^3$ (or Default 38.4), times 0.10 $m^3$ of gas measured at the gas meter, times a barometric pressure and temperature correction factor of 0.960; times 3600, then divided by the time it took to measure 0.10 $m^3$ of gas from the gas meter.

For Propane (LP) Gas multiply the Heat content of the gas MJ/$m^3$ (or Default 93.15), times 0.10 $m^3$ of gas measured at the gas meter, times a barometric pressure and temperature correction factor of 0.960; times 3600, then divided by the time it took to measure 0.10 $m^3$ of gas from the gas meter.

**The formula for metric input calculation using a cubic meter gas meter:**

| | | | | | | | | | | |
|---|---|---|---|---|---|---|---|---|---|---|
| $\frac{\text{MJ/m}^3 \times \text{m}^3 \times 0.960 \times 3600}{\text{Seconds it took to measure the 0.10 m}^3\text{ of gas}}$ | = | MJ/h | x | 0.2777 | = | kW | x | 3412.14 | = | Btu/h |
| **Natural gas input calculation**<br>EXAMPLE:<br>$\frac{38.4 \times 0.1 \times 0.960 \times 3600}{160}$<br>Natural gas<br>1030 Btu/SCF = 38.4 MJ/$m^3$ | = | 82.94 | x | 0.2777 | = | 23.03 | x | 3412.14 | = | 78,581.60 |
| **Propane (LP) gas input calculation**<br>Example:<br>$\frac{93.15 \times 0.1 \times 0.960 \times 3600}{387}$<br>Propane gas<br>2500 Btu/SCF = 93.15 MJ/$m^3$ | = | 83.19 | x | 0.2777 | = | 23.10 | x | 3412.14 | = | 78,826.3 |

Do not adjust the manifold pressure regulator if the actual input is equal to or within 8% less than the furnace input specified on the rating plate or if the furnace rise is above the specified rise range on the rating plate.

**If the actual input is significantly higher than the furnace input specified on the rating plate** then replace the gas orifices with the gas orifices of the proper size for the type of gas you are using.

For altitudes above 2,000 ft (610 m), the furnace input must be derated. See the gas conversion for propane (LP) and high altitudes in Section IV for information on high altitude conversions.

**⚠ CAUTION**

*Be sure to relight any gas appliances that were turned off at the start of this input check.*

## Checking the gas pressures

1. The pressure ports on the gas valve are marked OUT PRESSURE TAP and INLET PRESSURE TAP.
2. The manifold pressure must be taken at the port marked OUT P.
3. The inlet gas supply pressure must be taken at the port marked IN P.
4. Using a 3/32 in. (0.2 cm) hex head wrench, loosen the set screw by turning it 1 turn counter clockwise. **Do not remove the set screw from the pressure port.**
5. Push one end of the 3/8 in. (0.9 cm) ID flexible tubing over the pressure port so that the body of the port is inside the tubing.
6. Use a reducer connector to connect the 3/8 in. (0.9 cm) ID flexible tube that is connected to a U tube manometer or digital pressure measuring equipment.

**Table 8:** Inlet gas pressure range

| Inlet gas pressure range | | |
|---|---|---|
| | Natural gas | Propane (LP) |
| Minimum | 4.5 in. W.C. (1.12 kPa) | 8.0 in. W.C. (1.99 kPa) |
| Maximum | 10.5 in. W.C. (2.61 kPa) | 13.0 in. (3.24 kPa) W.C. |

**Important:** *The inlet gas pressure operating range table specifies the minimum and maximum gas line pressures required for safe furnace operation.*

The minimum inlet gas pressure required to obtain the Btu input specified on the rating plate and in these instructions is shown below:

- 4.5 in. W.C. (1.12 kPA) for Natural Gas
- 11.0 in. W.C. (2.74 kPA) for Propane (LP) Gas

## Adjustment of manifold gas pressure

Manifold gas pressure may be measured at the gas valve.

**Turn gas off at the ball valve or gas cock on gas supply line before the gas valve. Find the pressure ports on the gas valve marked OUT P and IN P.**

1. The manifold pressure must be taken at the port marked OUT P.
2. The gas line pressure must be taken at the port marked IN P.
3. Using a 3/32 in. hex head wrench, loosen the set screw by turning it one turn counter clockwise. **Do not remove the set screw from the pressure port.**

Use the 4 in. (10.2 cm) piece of 1/8 in. (0.3 cm) tubing to connect the positive side of the manometer to the gas valve pressure reference port. See **Figure 30** for connection details.

1. See **Figure 29** for location of pressure regulator adjustment cap and adjustment screw on main gas valve.
2. Turn gas and electrical supplies on and follow the operating instructions to place the unit back in operation.
3. Adjust manifold pressure by adjusting gas valve regulator screw for the appropriate gas per the following:

**Table 9:** Nominal manifold pressure

| Nominal manifold pressure | |
|---|---|
| Natural gas | 3.5 in. W.C. (0.87 kPa) |
| Propane (LP) gas | 10.0 in. W.C. (2.488 kPa) |

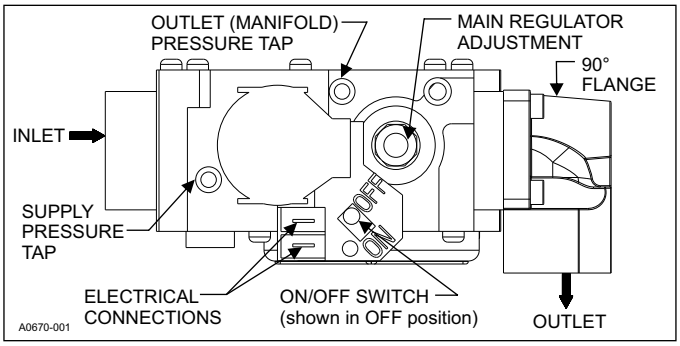


**Figure 29:** Gas valve

**Important:** *If gas valve regulator is turned in (clockwise), manifold pressure is increased. If screw is turned out (counter clockwise), manifold pressure will decrease.*

4. After the manifold pressure has been adjusted, re-calculate the furnace input to make sure you have not exceeded the specified input on the rating plate. See *Calculating the furnace input (natural gas).*
5. Once the correct Btu (kW) input has been established, turn the gas valve to OFF and turn the electrical supply switch to OFF; then remove the flexible tubing and fittings from the gas valve pressure tap and tighten the pressure tap plug using the 3/32 in. hex head wrench.
6. Turn the electrical and gas supplies back on, and with the burners in operation, check for gas leakage around the gas valve pressure port for leakage using an approved gas detector, a non-corrosive leak detection fluid, or other leak detection methods.

**⚠ WARNING**

*The manifold pressure must be checked with the screw-off cap for the gas valve pressure regulator in place. If not, the manifold pressure setting could result in an over-fire condition. A high manifold pressure will cause an over-fire condition, which could cause premature heat exchanger failure. If the manifold pressure is too low, sooting and eventual clogging of the heat exchanger could occur. Be sure that gas valve regulator cap is in place and burner box to gas valve pressure reference hose is connected.*

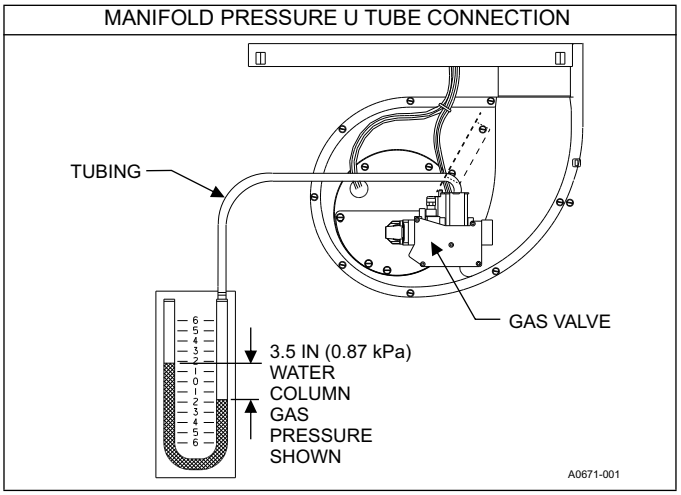


**Figure 30:** Reading gas pressure

## Adjustment of temperature rise

**⚠ DANGER**

*The temperature rise, or temperature difference between the return air and the supply (heated) air from the furnace, must be within the range shown on the furnace rating plate and within the application limitations shown in Table 5 Ratings and Physical / Electrical Data.*

*The supply air temperature cannot exceed the* ***Maximum Supply Air Temperature*** *specified in these instructions and on the furnace rating plate. Under NO circumstances can the furnace be allowed to operate above the Maximum Supply Air Temperature. Operating the furnace above the Maximum Supply Air Temperature will cause premature heat exchanger failure, high levels of Carbon Monoxide, a fire hazard, personal injury, property damage, and/or death.*

The temperature rise, or temperature difference between the return air and the heated supply air from the furnace, must be within the range shown on the furnace rating plate and within the application limitations as shown in **Table 5**.

After 20 min of operation, determine the furnace temperature rise. Take readings of both the return air and the heated air in the ducts.

## Adjustment of fan control settings

This furnace is equipped with a time-on/time-off heating fan control. The fan-on is not adjustable and should not be moved from the factory preset. The fan-off delay has four settings (60 s, 90 s, 120 s and 180 s). The fan-off delay is factory set to 120 s. The fan-off setting must be long enough to adequately cool the furnace, but not so long that cold air is blown into the heated space. The fan-off timing may be adjusted by positioning the jumper on two of the four pins as shown in **Figure 31**.

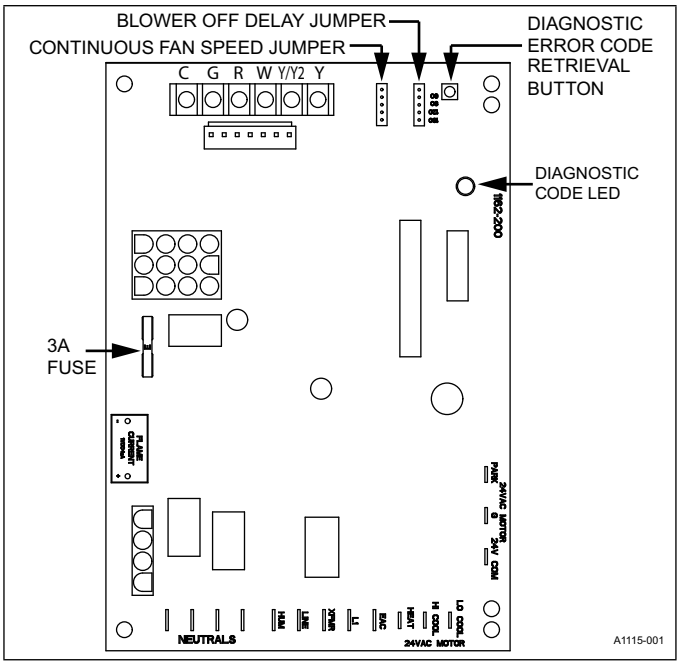


**Figure 31:** Furnace control board

## Filter performance

The airflow capacity data published in **Table 9** represents blower performance without filters.

## Applying filter pressure drop to determine system airflow

Example: For a 90,000 Btu/h (26.4 kW) furnace operating on high-speed blower, it is found that total system static is 0.18 in. W.C. (0.045 kPa). To determine the system airflow, complete the following steps:

Obtain the airflow values at 0.10 W.C. (0.02 Pa) and 0.20 W.C. (0.05 Pa) ESP.

Airflow at 0.10 in.: 1425 CFM (40.4 $m^3$/min)

Airflow at 0.20 in.: 1380 CFM (38.2 $m^3$/min)

Subtract the airflow at 0.10 W.C. (0.02 Pa) from the airflow at 0.20 W.C. (0.05 Pa) to obtain airflow difference.

1425 CFM - 1250 CFM = 175 CFM (5.0 $m^3$/min)

Subtract the total system static from 0.10 W.C. (125 Pa) and divide this difference by the difference in ESP values in the table 0.18 W.C. (0.045 kPa) - 0.10 w.c. (125 Pa), to obtain a percentage.

(0.18 - 0.10) / (0.20 - 0.10) = 0.2

Multiply percentage by airflow difference to obtain airflow reduction.

(0.2) X (175) = -35 CFM (0.99 $m^3$/min)

Subtract airflow reduction value to airflow at 0.10 W.C. (125 Pa) to obtain actual airflow at 0.18 in. W.C. (0.045 kPa) ESP.

1425 (40.4) - 35 = 1390 (39.4 $m^3$/min)

## Final procedure

### Install furnace doors

Install the lower door first by sliding the bottom of the door down until the tabs on the casing base engage the slots in the bottom door end cap. Then push the top of the lower door in until the door clips snap into place. Install the upper door in a similar manner, first engaging the slots in the top of the upper door on the tabs on the casing top. Then snap the bottom of the upper door into place against the casing.

### Finish and trim

Alcove and closet installations may now be finished and trimmed as necessary.

**Table 10:** Blower performance CFM - downflow without filters

| Models | Btu/h (kW) input / output | Speed tap | Airflow data (SCFM) | | | | | | | | | |
|---|---|---|---|---|---|---|---|---|---|---|---|---|
| | | | External static pressure (in. $H_20$) | | | | | | | | | |
| | | | Without coil | | | | | With coil | | | | |
| | | | 0.1 | 0.2 | 0.3 | 0.4 | 0.5 | 0.1 | 0.2 | 0.3 | 0.4 | 0.5 |
| DGAX056 | 56/45 (16.4/13.1) | High | 1441 | 1404 | 1366 | 1332 | 1292 | 1342 | 1311 | 1278 | 1250 | 1224 |
| | | Medium high | 1233 | 1197 | 1164 | 1130 | 1094 | 1164 | 1138 | 1111 | 1083 | 1051 |
| | | Medium | 1074 | 1035 | 998 | 964 | 922 | 1016 | 989 | 960 | 928 | 898 |
| | | Medium low | 1000 | 962 | 923 | 885 | 845 | 953 | 923 | 890 | 854 | 821 |
| | | Low | 731 | 687 | 637 | 588 | 529 | 689 | 664 | 620 | 574 | 529 |
| DGAX070 | 70/56 (20.5/16.4) | High | 1441 | 1404 | 1366 | 1332 | 1292 | 1342 | 1311 | 1278 | 1250 | 1224 |
| | | Medium high | 1233 | 1197 | 1164 | 1130 | 1094 | 1164 | 1138 | 1111 | 1083 | 1051 |
| | | Medium | 1074 | 1035 | 998 | 964 | 922 | 1016 | 989 | 960 | 928 | 898 |
| | | Medium low | 1000 | 962 | 923 | 885 | 845 | 953 | 923 | 890 | 854 | 821 |
| | | Low | 731 | 687 | 637 | 588 | 529 | 689 | 664 | 620 | 574 | 529 |
| DGAX077 | 77/62 (22.5/18.5) | High | 1441 | 1404 | 1366 | 1332 | 1292 | 1342 | 1311 | 1278 | 1250 | 1224 |
| | | Medium high | 1233 | 1197 | 1164 | 1130 | 1094 | 1164 | 1138 | 1111 | 1083 | 1051 |
| | | Medium | 1074 | 1035 | 998 | 964 | 922 | 1016 | 989 | 960 | 928 | 898 |
| | | Medium low | 1000 | 962 | 923 | 885 | 845 | 953 | 923 | 890 | 854 | 821 |
| | | Low | 731 | 687 | 637 | 588 | 529 | 689 | 664 | 620 | 574 | 529 |
| DGAX090 | 90/72 (26.3/21.1) | High | 1441 | 1404 | 1366 | 1332 | 1292 | 1342 | 1311 | 1278 | 1250 | 1224 |
| | | Medium high | 1233 | 1197 | 1164 | 1130 | 1094 | 1164 | 1138 | 1111 | 1083 | 1051 |
| | | Medium | 1074 | 1035 | 998 | 964 | 922 | 1016 | 989 | 960 | 928 | 898 |
| | | Medium low | 1000 | 962 | 923 | 885 | 845 | 953 | 923 | 890 | 854 | 821 |
| | | Low | 731 | 687 | 637 | 588 | 529 | 689 | 664 | 620 | 574 | 529 |

Use Low speed tap(5) for DGAX056 for compliance with Fan Efficiency Rating test.
Use Medium Low(4) speed tap for DGAX070 for compliance with Fan Efficiency Rating test.
Use Medium(3) speed tap for DGAX077 for compliance with Fan Efficiency Rating test.
Use Medium High(2) speed tap for DGAX090 for compliance with Fan Efficiency Rating test.
Applications with static pressures higher than 0.3 in. are not recommended.

# Section IX: Safety controls

## Control circuit fuse

A 3-amp fuse is provided on the control circuit board to protect the 24 V transformer from overload caused by control circuit wiring errors. This is an ATO 3, automotive type fuse and is located on the control board.

## Rollout switch controls

These controls are mounted on the burner assembly. If the temperature in the area surrounding the burner exceeds its set point, the gas valve is de-energized. The operation of this control indicates a malfunction in the combustion air blower or heat exchanger or a blocked vent pipe connection. Corrective action is required. These are manual reset controls that must be reset before operation can continue.

## Pressure switches

This furnace is supplied with a pressure switch, which monitors the flow through the combustion air/vent piping system. This switch de-energizes the gas valve if any of the following conditions are present: See **Figure 32** for tubing connections.

1. Blockage of vent piping or terminal
2. Failure of combustion air blower motor

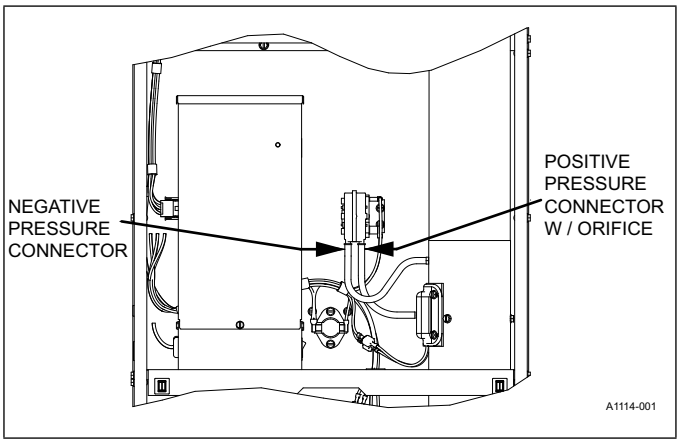


**Figure 32:** Pressure switch tubing routing

## Limit controls

There is a high temperature limit control located on the furnace vestibule panel near the gas valve. This is an automatic reset control that provides over temperature protection due to reduced airflow. This may be caused by:

1. A dirty filter
2. Failure of the indoor fan motor
3. Too many supply or return registers closed or blocked off

The control module locks out if the limit trips five consecutive times. If this occurs, the control resets and try ignition again after 1 h.

## Sequence of operation

The following describes the sequence of operation of the furnace. Refer to the *User's Manual* for component location.

### Continuous blower

Cooling/heating thermostats have a fan switch that has an ON and AUTO position. In the ON position, the thermostat circuit is completed between terminals R and G. The motor operates continuously on the speed selected on the FAN SPEED jumper on the main control board.

### Intermittent blower - cooling

On cooling/heating thermostats with a fan switch, when the fan switch is set in the auto position and the thermostat calls for cooling, a circuit completes between the R, Y, and G terminals. The motor is energized through the Y1 cool terminal and runs on the speed selected on the COOL tap of the CFM Timer board. The fan off setting is fixed at 60 s for SEER enhancement. The control board can accommodate two-stage cooling. When a two-stage cool thermostat is connected to the Y1 and Y2 terminals on the board, the blower operates on LOW COOL speed when Y1 energizes and on HI COOL speed when Y1 and Y2 energizes.

### Heating cycle

When the thermostat switch is set on HEAT and the fan is set on AUTO, and there is a call for heat, a circuit is completed between terminals R and W of the thermostat. When the correct amount of combustion air is being provided, the pressure switch closes, and the ignition control provides a 30 s ignitor warm-up period. The gas valve then opens, the gas starts to flow, ignition occurs, and the flame sensor begins its sensing function. The blower motor energizes 30 s after the gas valve opens, if a flame is detected. Normal furnace operation continues until the thermostat circuit between R and W is opened, which causes the ignition system and gas valve to de-energize and the burner flames to be extinguished. The vent motor operates for 15 s and the blower motor operates for the amount of time set by the fan-off delay jumper located on the control board. See **Figure 30**. The heating cycle is now complete, and ready for the start of the next heating cycle.

If the flame is not detected within 7 s of the gas valve opening, the gas valve is shut off and a retry operation begins. Also, if the flame is lost for 2 s during the 10 s stabilization period, the gas valve is shut off and a retry operation begins. During a retry operation, the vent motor starts a 15 s inter-purge and the ignitor warm-up time is extended to 27 s. If the flame is established for more than 10 s after ignition during a retry, the control clears the ignition attempt (retry) counter. If three retries occur during a call for heat, the furnace shuts down for 1 h. If at the end of the 1 h shut down there is a call for heat, the furnace initiates a normal start cycle. If the problem has not been corrected, the furnace again locks out after three retries.

A momentary loss of gas supply, flame blowout, or a faulty flame probe circuit results in a disruption in the flame and is sensed within 1.0 s. The gas valve de-energizes and the control begins a recycle operation. A normal ignition sequence begins after a 15 s inter-purge. If during the five recycles the gas supply does not return, or the fault condition is not corrected, the ignition control locks out for 60 min.

During burner operation, a momentary loss of power for 50 milliseconds or longer de-energizes the gas valve. When the power is restored, the gas valve remains de-energized and the ignition sequence immediately restarts.

### Hot surface ignition system

**⚠ WARNING**

***HOT SURFACE IGNITION SYSTEM***

*Do not attempt to light this furnace by hand (with a match or any other means). There may be a potential shock hazard from the components of the hot surface ignition system. The furnace can only be lit automatically by its hot surface ignition system.*

## Troubleshooting

The following visual checks should be made before troubleshooting:

1. Check to see that the power to the furnace and the ignition control module is ON.
2. The manual shut-off valves in the gas line to the furnace must be open.
3. Make sure all wiring connections are secure.
4. Review the sequence of operation. Start the system by setting the thermostat above the room temperature. Observe the system's response. Then use the troubleshooting section in this manual to check the system's operation.

**⚠ WARNING**

*Never bypass any safety control to allow furnace operation. To do so will allow furnace to operate under potentially hazardous conditions.*

*Do not try to repair controls. Replace defective controls with UPG Source 1 Parts.*

*Never adjust pressure switch to allow furnace operation.*

## Furnace control diagnostics

The furnace has built-in, self-diagnostic capability. A blinking LED light on the control board can flash red, green, or amber to indicate various conditions. The control continuously monitors its own operation and the operation of the system. If a failure occurs, the LED light will indicate the failure code.

The SLOW flash speed is 2 s on and 2 s off.

The other flash codes listed below have the following timing: LED light will turn on for 1/3 s and off for 1/3 s. This pattern will be repeated the number of times equal to the code. There will be a 2 s pause between codes. For example, the 6 Red Flashes code will flash the LED light on and off six times, then will be off for 2 s. This pattern will repeat as long as the fault condition remains.

**Slow green flash:** Normal operation, no thermostat calls.

**Slow amber flash:** Normal operation with call for heat.

**LED steady off**: If the LED light does not flash at all, check for power to the board and check for a blown fuse on the board. If the board is properly powered and the fuse is not blown, the control board may need to be replaced.

**Steady on any color:** Control failure. Turn power to the furnace off and back on. If the fault code returns, the control board must be replaced. The control board is not field-repairable.

**One red flash:** This indicates that flame was sensed when there was not a call for heat. The control will turn on both the inducer motor and supply air blower. Check for a leaking or slow-closing gas valve.

**Two red flashes:** This indicates that the pressure switch is closed when it should be open. The control confirms that the pressure switch contacts are open at the beginning of each heat cycle and will not let the ignition sequence continue if the pressure switch contacts are closed when they should be open. Check for a faulty pressure switch or miswiring.

**Three red flashes:** This indicates the pressure switch contacts are open when they should be closed. Check for faulty inducer, blocked vent pipe, broken pressure switch hose, disconnected pressure switch or inducer wires or faulty pressure switch.

**Four red flashes:** This indicates that the main limit switch has opened its normally closed contacts. The control will operate the supply air blower and inducer while the open limit condition exists. Check for a dirty filter, improperly sized duct system, incorrect blower speed setting, incorrect firing rate, loose limit switch wiring, or faulty blower motor.

If the limit switch has not closed within 5 min, the control will assume that the blower is not functioning, will start a hard lockout and will begin to flash the 11 Red Flashes error code. Power will have to be cycled off and on to reset the control after the problem has been corrected. See the 11 Red Flashes description below.

If the main limit switch opens five times within a single call for heat, the control will also indicate four Red Flashes and will enter a one-hour soft lockout.

**Five red flashes:** This fault is indicated if the normally closed auxiliary limit switch opens. The auxiliary limit switch is manually reset. Check for proper combustion air, proper inducer operation, and primary heat exchanger failure or burner problem. The control will enter a hard lockout and power will have to be cycled off and on to reset the control after the problem has been corrected.

**Six red flashes:** This indicates that while the unit was operating, the pressure switch opened four times during the call for heat. Check for faulty inducer, blocked vent pipe, or faulty pressure switch. The furnace will lock out for one hour and then restart.

**Seven red flashes:** This fault code indicates that the flame could not be established during three trials for ignition. Check that the gas valve switch is in the ON position. Check for low or no gas pressure, faulty gas valve, dirty or faulty flame sensor, faulty hot surface ignitor, loose wires, or a burner problem. The furnace will lock out for one hour and then restart.

**Eight red flashes:** This fault is indicated if the flame is lost five times (four recycles) during the heating cycle. Check for low gas pressure, dirty or faulty flame sensor, or faulty gas valve. The furnace will lock out for one hour and then restart.

**Nine red flashes:** Indicates reversed line voltage polarity, grounding problem, or reversed low voltage transformer wires. Both heating and cooling operations will be affected. Check polarity at furnace and branch. Check furnace grounding. Check that flame probe is not shorted to chassis. The furnace will not start the ignition sequence until this problem is corrected.

**10 red flashes:** Gas valve energized with no call for heat. The main blower and inducer blower will run and no ignition sequence will be started as long as this condition exists. Check gas valve and gas valve wiring.

**11 red flashes:** This indicates that the main limit switch has opened its normally-closed contacts and has remained open for more than 5 min. This condition is usually caused by a failed blower motor or blower wheel. The control will enter a hard lockout and power will have to be cycled off and on to reset the control after the problem has been corrected.

**Four amber flashes:** The control is receiving a **Y** signal from the thermostat without a **G** signal. The furnace will operate normally in both heating and cooling, but this fault code will be displayed in order to alert the user that there is a wiring problem. Verify that the **G** wire from the thermostat is connected properly.

**Soft lockout:** This control includes a soft lockout that will reset automatically after one hour. This provides protection to an unoccupied structure if a temporary condition exists causing a furnace malfunction. An example of this is a temporary interruption in gas supply that would prevent the furnace from lighting. The control will keep trying to light each hour and will resume normal operation if the gas supply is restored.

**Hard lockout:** Some fault conditions result in a hard lockout, which requires power to the control to be turned off and then back on to reset the control. The control will not automatically restart.

| Ignition control flame sense levels |
|---|
| Normal flame sense current is approximately 3.7 microamps DC (μa) |
| Low flame signal warning starts at 1.5 microamps |
| Low flame signal control lockout point is 0.1 microamps DC (μa) |

## Diagnostic fault code storage and retrieval

The control in this furnace is equipped with memory that will store up to five error codes to allow a service technician to diagnose problems more easily. This memory will be retained even if power to the furnace is lost. **This feature should only be used by a qualified service technician.**

If more than five error codes have occurred since the last reset, only the five most recent will be retained. The furnace control board has a button, labeled **LAST ERROR** that is used to retrieve error codes. This function will only work if there are no active thermostat signals. So any call for heating, cooling, or continuous fan must be terminated before attempting to retrieve error codes.

To retrieve the error codes, push the **LAST ERROR** button. The LED on the control will then flash the error codes that are in memory, starting with the most recent. There will be a two-second pause between each flash code. After the error codes have all been displayed, the LED will resume the normal slow green flash after a five second pause. To repeat the series of error codes, push the button again.

If there are no error codes in memory, the LED will flash two green flashes. To clear the memory, push the **LAST ERROR** button and hold it for more than 5 s. The LED will flash three green flashes when the memory has been cleared, then will resume the normal slow green flash after a 5 s pause.

## Section X: Wiring diagram

# Wiring Diagram - DGAX STD ECM DOWNFLOW FURNACE

**CAUTION**
OPEN ALL DISCONNECTS BEFORE SERVICING THIS UNIT

**PRECAUTION**
OUVREZ LES DISJONCTEURS AVANT DE PROCEDER AVEC LE SERVICE

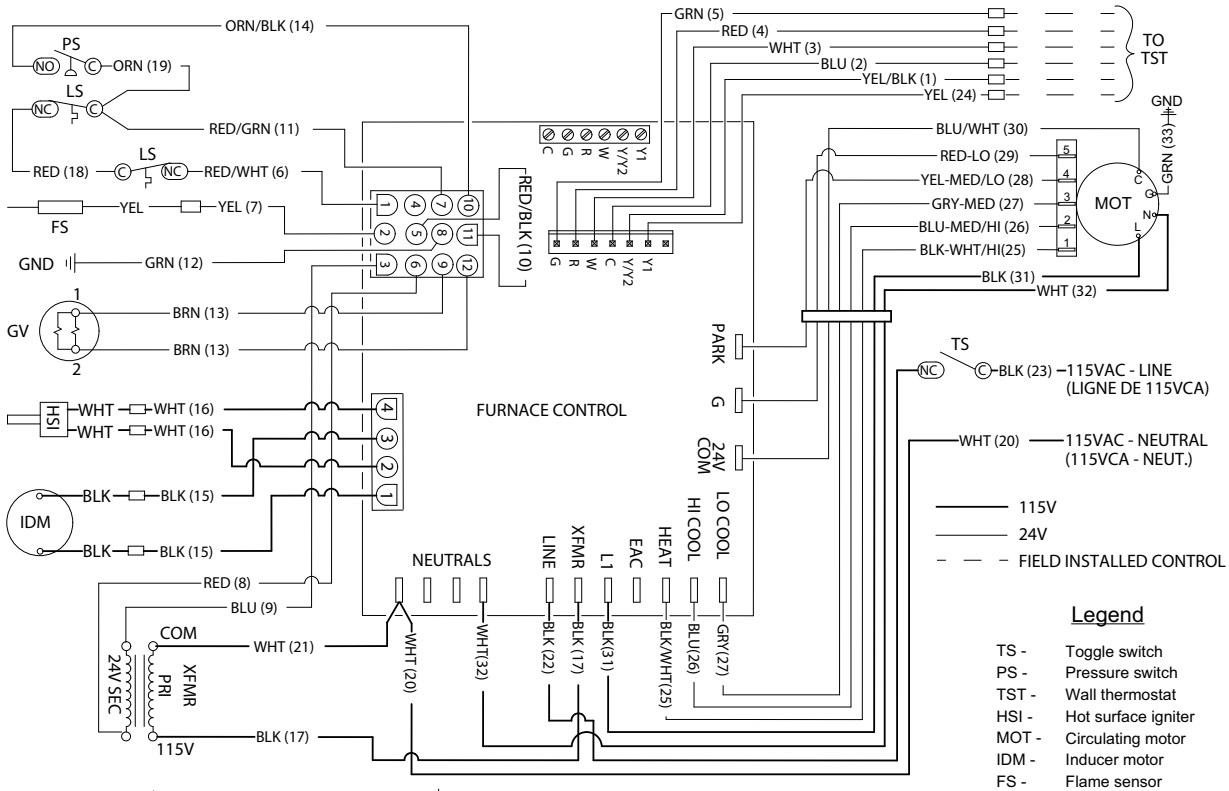


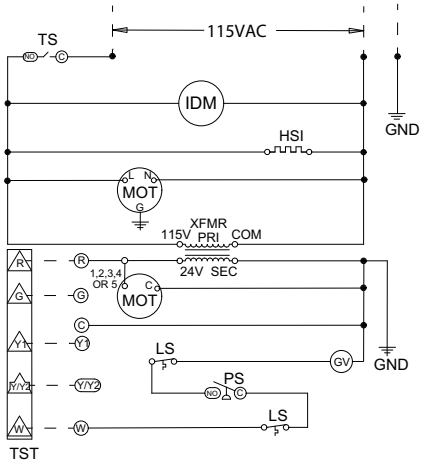


### Legend

| | |
|---|---|
| TS - | Toggle switch |
| PS - | Pressure switch |
| TST - | Wall thermostat |
| HSI - | Hot surface igniter |
| MOT - | Circulating motor |
| IDM - | Inducer motor |
| FS - | Flame sensor |
| GV - | Gas valve |
| LS - | Limit switch |
| XFMR - | Transformer |

### Legende

| | |
|---|---|
| TS - | Commutateur a levier |
| PS - | Commutateur de pression |
| LS - | Commutateur de limite |
| XFMR - | Transformeur |
| MOT - | Moteur soufflerie |
| IDM - | D'induct moteur |
| GV - | Soupape de gaz |
| HSI - | Ignition de surface chaud |
| TST - | Thermostat |
| FS - | Capteur de flame |

### Diagnostic Fault Codes

| Flashes | Fault Condition |
|---|---|
| None | Power Off or blown fuse |
| Slow Green | Normal Operation |
| Slow Amber | Normal Operation with call for heat |
| 4 Amber | No G from thermostat |
| Steady on Red | Control Failure |
| 1 Red | Flame present with gas off |
| 2 Red | Check pressure switch wiring |
| 3 Red | Vent OR termination problem |
| 4 Red | Airflow problem OR open fuse |
| 5 Red | Auxiliary limit OR open fuse |
| 6 Red | Repeated 3 Red |
| 7 Red | Failed to light burners |
| 8 Red | Loss of flame during call for heat |
| 9 Red | Hot/Neutral reversed OR poor ground/neutral |
| 10 Red | Gas valve shorted "ON" |
| 11 Red | Check blower motor/wiring |

NOTES:
1. If any of the original wire as supplied with the furnace must be replaced, it must be replaced with wiring material having a temperature rating of at least 221 degrees F (105 degrees C ).
2. Blower motor speed connections shown are typical, but may vary by model and application.

NOTES:
1. Si l'un des fils d'origine fourni avec ce four doit être remplacé, il doit être remplacé avec le fil ayant un degré de température d'au moins 221 degrés F (105 degrés C ).
2. Les connexions à grande vitesse du moteur du ventilateur indiqués sont typiques, mais peuvent varier selon le modèle et par application.

### Fault Code Retrieval

Notice - Only a qualified service technician should use this feature.

Fault code retrieval functions will work only if there are no active thermostat signals.

To retrieve fault codes, push and release ERROR button on control board. The LED will flash the last five error codes, beginning with the most recent. If there are no fault codes in memory, the LED will give two green flashes. To clear the fault code memory, push and hold the ERROR button for at least five seconds. The LED will give three green flashes when the memory has been cleared.

5450383-UWD-A-1017

**Figure 33:** Wiring diagram - DGAX

# Notes

Subject to change without notice. Published in U.S.A.
Copyright © 2024 by Johnson Controls, Inc. All rights reserved.

5483101-UIM-C-0524
Supersedes: 5483101-UIM-B-0822

**York International Corp.**
**5005 York Drive**
**Norman, OK 73069**