INSTALLATION INSTRUCTIONS

A97DSMV

Warm Air Gas Furnace

Downflow Air Discharge

This manual must be left with the homeowner for future reference.

This is a safety alert symbol and should never be ignored. When you see this symbol on labels or in manuals, be alert to the potential for personal injury or death.

CAUTION

As with any mechanical equipment, personal injury can result from contact with sharp sheet metal edges. Be careful when you handle this equipment.

WARNING

Improper installation, adjustment, alteration, service or maintenance can cause property damage, personal injury or loss of life. Installation and service must be performed by a licensed professional installer (or equivalent), service agency or the gas supplier.

NOTICE

A thermostat is not included and must be ordered separately.

- A Comfort Sync™ thermostat must be used in communicating applications.
- In non-communicating applications, a traditional non-communication thermostat may be used.

In all cases, setup is critical to ensure proper system operation.

Field wiring for both communicating and non-communicating applications is illustrated in these instructions.

Table of Contents

Unit Dimensions 2
Parts Arrangement....3
A97DSMV Gas Furnace 4
Shipping and Packing List 4
Safety Information 4
General....6
Installation 6
Filters....9
Duct System 9
Venting....12
Condensate Piping 25
Gas Piping 28
Electrical 30
Blower Performance 44
Unit Start-Up....48
Other Unit Adjustments 52
Heating Sequence of Operation 53
Service....54
Repair Parts List 56
Integrated Control Diagnostic Codes....56

(P) 507029-04

Manufactured By
Allied Air Enterprises LLC
A Lennox International, Inc. Company
215 Metropolitan Drive
West Columbia, SC 29170

Unit Dimensions

*** NOTE** - C/D20 size units that require second stage air volumes over 1800 cfm (850 L/S) must have one of the following:

- Single side return air with transition, to accommodate 20 x 25 x 1 in. (508 x 635 x 25 mm) air filter.
- Single side return air with optional RAB Return Air Base
- Bottom return air.
- Return air from both sides.
- Bottom **and** one side return air.

See Blower Performance tables for additional information.

* Optional External Side Return Air Filter Kit is not for use with the optional RAB Return Air Base.

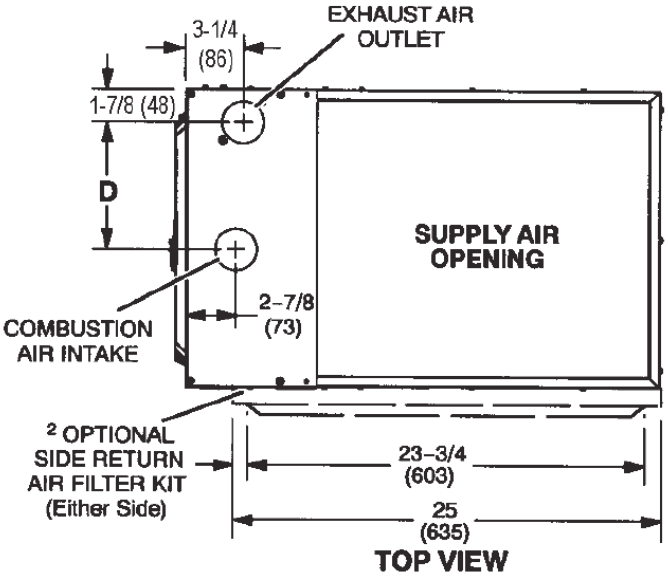

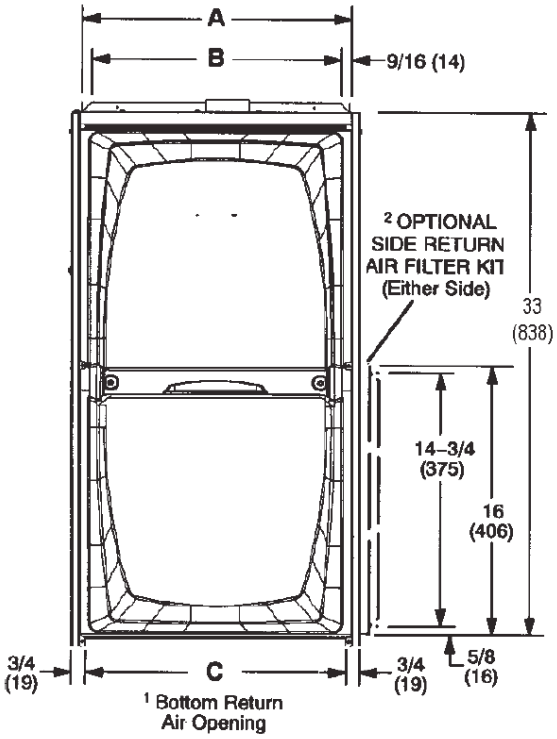

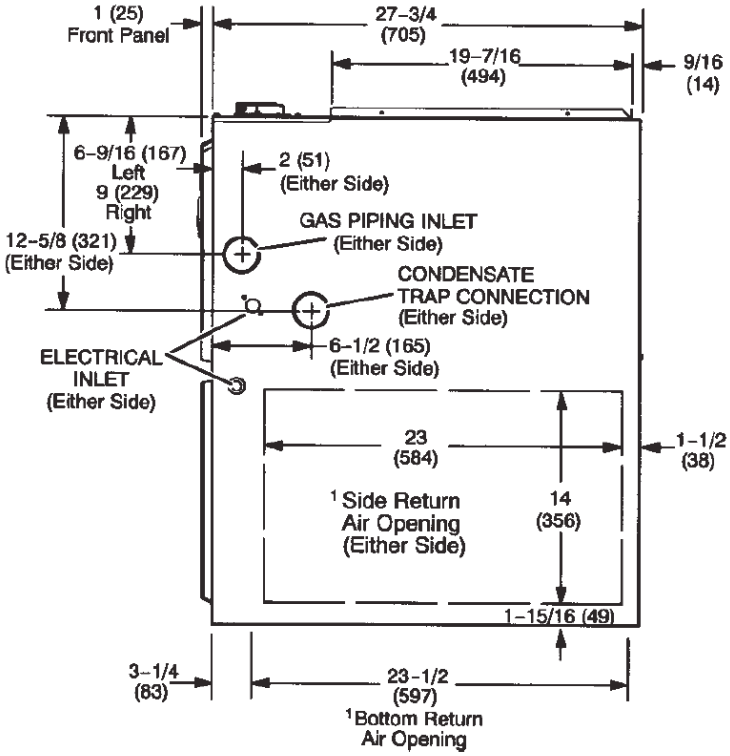

Model	A		B		C		D	
	in.	mm	in.	mm	in.	mm	in.	mm
A97DSMV070B12S	17-1/2	446	16-3/8	416	16	406	7-5/8	194
A97DSMV090C12S	21	533	19-7/8	505	19-1/2	495	9-3/8	238
A97DSMV090C16S								
A97DSMV090C20S								
A97DSMV110C20S								

Parts Arrangement

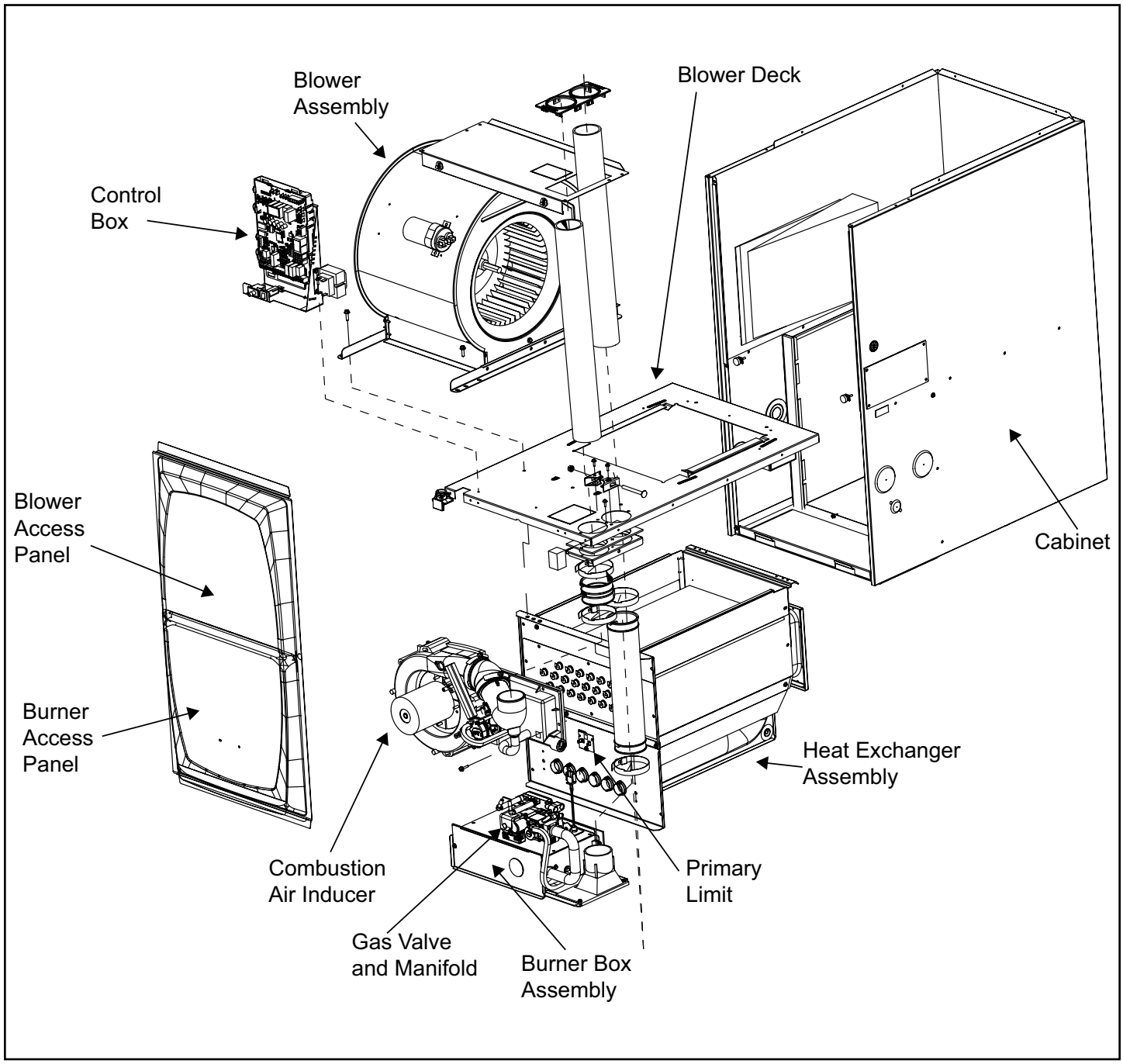

Figure 1.

A97DSMV Gas Furnace

The A97DSMV Category IV gas furnace is equipped with a variable capacity, variable speed integrated control. Each A97DSMV is shipped ready for installation in the downflow position.

The furnace is equipped for installation in natural gas applications only. A change over kit must be ordered for LP/propane applications.

The A97DSMV must be installed only as a Direct Vent gas central furnace

NOTE: *In Direct Vent installations, combustion air is taken from outdoors and flue gases are discharged outdoors. See Figure 2 for applications including roof termination.*

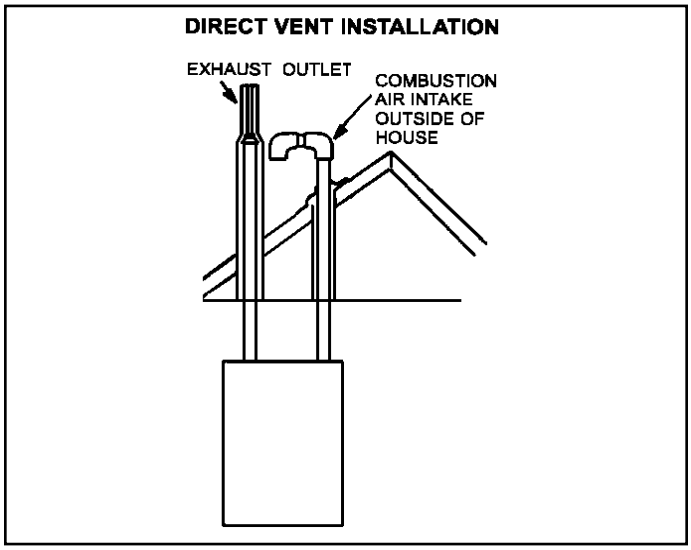

Figure 2.

Shipping and Packing List

1 - Assembled A97DSMV unit.

1 - Bag assembly containing the following:
- 1 - Snap bushing
- 1 - Snap Plug
- 1 - Wire tie
- 1 - Condensate trap
- 1 - 3/4” Threaded PVC street elbow
- 2 - 2” Street elbows
- 2 - Side vent sealing plates
- 2 - Side vent sealing gaskets
- 6 - Sheet metal screws

Check equipment for shipping damage. If you find any damage, immediately contact the last carrier.

The following items may also be ordered separately:
- 1 - Thermostat
- 1 - Natural to LP gas conversion kit
- 1 - High altitude kit

Safety Information

⚠ DANGER

DANGER OF EXPLOSION!

There are circumstances in which odorant used with LP/Propane gas can lose its scent. In case of a leak, LP/Propane gas will settle close to the floor and may be difficult to smell. An LP/Propane leak detector should be installed in all LP applications.

⚠ WARNING

Improper installation, adjustment, alteration, service or maintenance can cause property damage, personal injury or loss of life. Installation and service must be performed by a licensed professional installer (or equivalent), service agency or the gas supplier.

⚠ CAUTION

As with any mechanical equipment, personal injury can result from contact with sharp sheet metal edges. Be careful when you handle this equipment.

Use only the type of gas approved for use with this furnace. Refer to unit nameplate.

Building Codes

In the USA, installation of gas furnaces must conform with local building codes. In the absence of local codes, units must be installed according to the current National Fuel Gas Code (ANSI Z223.1/NFPA 54). The National Fuel Gas Code is available from the American National Standards Institute, Inc., 11 West 42nd Street, New York, NY 10036.

Installed Locations

In Canada, installation must conform with current National Standard of Canada CSA-B149 Natural Gas and Propane Installation Codes, local plumbing or waste water codes and other applicable local codes.

The furnace is designed for installation clearances to combustible material as listed on the unit nameplate and in the table in Figure 7. Accessibility and service clearances must take precedence over fire protection clearances.

NOTE*: For installation on combustible floors, the furnace shall not be installed directly on carpeting, tile, or other combustible material other than wood flooring.*

For installation in a residential garage, the furnace must be installed so that the burner(s) and the ignition source are located no less than 18 inches (457 mm) above the floor. The furnace must be located or protected to avoid physical damage by vehicles. When a furnace is installed in a public garage, hangar, or other building that has a hazardous atmosphere, the furnace must be installed according to recommended good practice requirements and current National Fuel Gas Code or CSA B149 standards.

Note: *Furnace must be adjusted to obtain a temperature rise (100% percent capacity) within the range(s) specified on the unit nameplate. Failure to do so may cause erratic limit operation and may also result in premature heat exchanger failure.*

This furnace must be installed so that its electrical components are protected from water.

Installed in Combination with a Cooling Coil

When this furnace is used with cooling units, it shall be installed in parallel with, or on the upstream side of, cooling units to avoid condensation in the heating compartment. With a parallel flow arrangement, a damper (or other means to control the flow of air) must adequately prevent chilled air from entering the furnace. If the damper is manually operated, it must be equipped to prevent operation of either the heating or the cooling unit, unless it is in the full HEAT or COOL setting. See Figure 3.

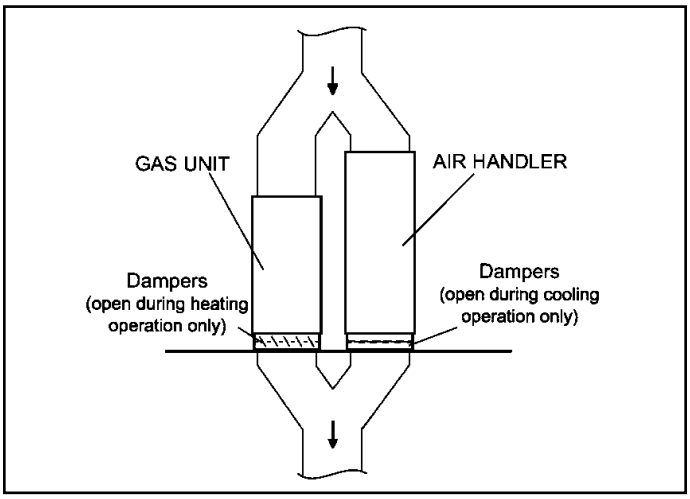

Figure 3. Heating Unit Installed Parallel to Air Handler Unit

When installed, this furnace must be electrically grounded according to local codes. In addition, in the United States, installation must conform with the current National Electric Code, ANSI/NFPA No. 70. The National Electric Code (ANSI/NFPA No. 70) is available from the following address:

National Fire Protection Association
1 Battery March Park
Quincy, MA 02269

NOTE: *This furnace is designed for a minimum continuous return air temperature of 60°F (16°C) or an intermittent operation down to 55°F (13°C) dry bulb for cases where a night setback thermostat is used. Return air temperature must not exceed 85°F (29°C) dry bulb.*

In Canada, all electrical wiring and grounding for the unit must be installed according to the current regulations of the Canadian Electrical Code Part I (CSA Standard C22.1) and/or local codes.

⚠ CAUTION

Do Not set thermostat below 60° F (16° C) in heating mode. Setting thermostat below 60° F (16° C) reduces the number of heating cycles. Damage to the unit may occur that is not covered by the warranty.

This furnace may be installed in alcoves, closets, attics, basements, garages, crawl spaces and utility rooms.

This furnace design has not been CSA Certified for installation in mobile homes, recreational vehicles, or outdoors.

Use of Furnace as a Construction Heater

Units may be used for heating of buildings or structures under construction, if the following conditions are met to ensure proper operation.

DO NOT USE THE UNIT FOR CONSTRUCTION HEAT UNLESS ALL OF THE FOLLOWING CRITERIA ARE MET:

a. Furnace must be in its final location. The vent system must be permanently installed per these installation instructions.

b. Furnace must be installed as a two pipe system and one hundred percent (100%) outdoor air must be provided for combustion air requirements during construction.

c. A room thermostat must control the furnace. The use of fixed jumpers that will provide continuous heating is prohibited.

d. The input rate and temperature rise must be set per the furnace rating plate.

e. Supply and Return air ducts must be provided and sealed to the furnace. Return air must be terminated outside of the space where furnace is installed.

f. Return air temperature range between 60°F (16°C) and 80°F (27°C) must be maintained.

g. MERV 11 or greater air filters must be installed in the system and must be regularly inspected and maintained (e.g., regular static checks and replaced at end of life) during construction.

h. Blower and vestibule access panels must be in place on the furnace at all times.

i. The furnace heat exchanger, components, duct system, and evaporator coils must be thoroughly cleaned following final construction clean−up.

j. Air filters must be replaced upon construction completion.

k. All furnace operating conditions (including ignition, input rate, temperature rise and venting) must be verified in accordance with these installation instructions.

EQUIPMENT MAY EXPERIENCE PREMATURE COMPONENT FAILURE AS A RESULT OF FAILURE TO FOLLOW THE ABOVE INSTALLATION INSTRUCTIONS. FAILURE TO FOLLOW THE ABOVE INSTALLATION INSTRUCTIONS VOIDS THE MANUFACTURER'S EQUIPMENT LIMITED WARRANTY. ALLIED AIR DISCLAIMS ALL LIABILITY IN CONNECTION WITH INSTALLER'S FAILURE TO FOLLOW THE ABOVE INSTALLATION INSTRUCTIONS.

NOTWITHSTANDING THE FOREGOING, INSTALLER IS RESPONSIBLE FOR CONFIRMING THAT THE USE OF CONSTRUCTION HEAT IS CONSISTENT WITH THE POLICIES AND CODES OF ALL REGULATING ENTITIES. ALL SUCH POLICIES AND CODES MUST BE ADHERED TO.

General

⚠ CAUTION

These units should not be installed in areas normally subject to freezing temperatures.

These instructions are intended as a general guide and do not supersede local codes in any way. Consult authorities having jurisdiction before installation.

In addition to the requirements outlined previously, the following general recommendations should be considered when installing one of these furnaces:

- Place the furnace as close to the center of the air distribution system as possible. The furnace should also be located close to the vent termination point.
- When the furnace is installed in an attic or other insulated space, keep insulation away from the furnace.
- When the furnace is installed in an unconditioned space, consider provisions required to prevent freezing of condensate drain system.

Installation

Setting Equipment

⚠ WARNING

Do not install the furnace on its front or its back. See Figure 5. Do not connect the return air ducts to the back of the furnace. Doing so will adversely affect the operation of the safety control devices, which could result in personal injury or death.

Select a location that allows for the required clearances that are listed on the unit nameplate. Also consider gas supply connections, electrical supply, vent connection, condensate trap and drain connections, and installation and service clearances (24 inches [610 mm] at unit front). The unit must be level from side to side, for proper operation. It is recommended to tilt the unit slightly toward the drain to insure proper drainage. See Figure 4.

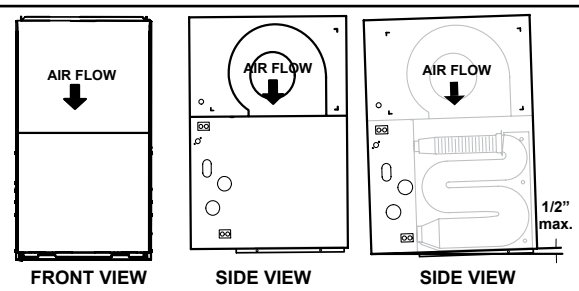

Unit must be level side-to-side. Unit may be positioned from level to 1/2" toward the front to aid in draining.

Figure 4. Setting Equipment

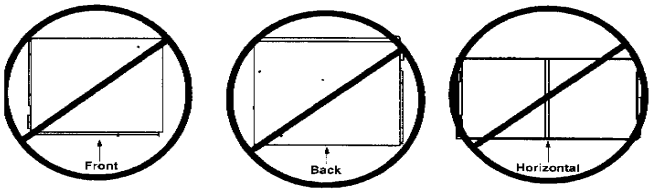

Figure 5.

NOTE: *Units with 1/2 hp blower motor are equipped with three flexible legs and one rigid leg. The rigid leg is equipped with a shipping bolt and a flat white plastic washer (rather than the rubber mounting grommet used with a flexible mounting leg). See Figure 6. The bolt and washer must be removed before the furnace is placed into operation. After the bolt and washer have been removed, the rigid leg will not touch the blower housing.*

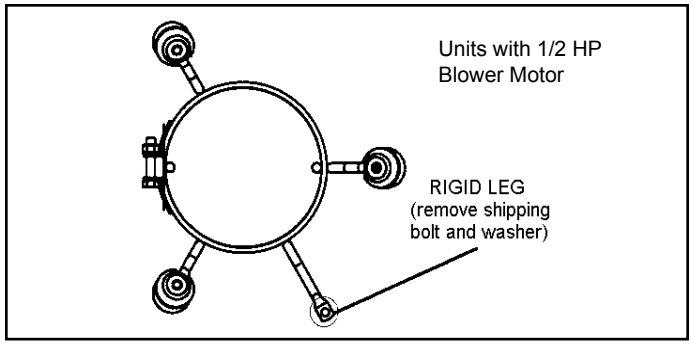

Figure 6.

Allow for clearances to combustible materials as indicated on the unit nameplate. Minimum clearances for closet or alcove installations are shown in Figure 7.

> **⚠ WARNING**
>
> Blower access panel must be securely in place when blower and burners are operating. Gas fumes, which could contain carbon monoxide, can be drawn into living space resulting in personal injury or death.

> **⚠ WARNING**
>
> Improper installation of the furnace can result in personal injury or death. Combustion and flue products must never be allowed to enter the return air system or air in the living space. Use sheet metal screws and joint tape to seal return air system to furnace.
>
> In platform installations with furnace return, the furnace should be sealed airtight to the return air plenum. A door must never be used as a portion of the return air duct system. The base must provide a stable support and an airtight seal to the furnace. Allow absolutely no sagging, cracks, gaps, etc.
>
> For no reason should return and supply air duct systems ever be connected to or from other heating devices such as a fireplace or stove, etc. Fire, explosion, carbon monoxide poisoning, personal injury and/or property damage could result.

The unit may be installed three ways in downflow applications: on non-combustible flooring, on combustible flooring using an additive base, or on a reverse-flow cooling coil cabinet. Do not drag the unit across the floor in the downflow position. Floor and furnace flange damage will result.

Refer to Figure 2 for clearances in downflow applications.

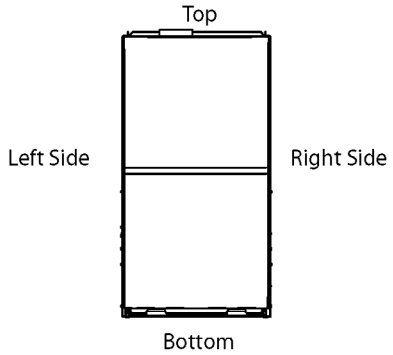

Top	0
* Front	0
Back	0
Sides	0†
Vent	0
Floor	NC‡

* Front clearance in alcove installation must be 24 in. (610 mm). Maintain a minimum of 24 in. (610 mm) for front service access.

† Allow proper clearances to accommodate condensate trap installation.

‡ For installations on a combustible floor, do not install the furnace directly on carpeting, tile or other combustible materials other than wood flooring.

Figure 7. Downflow Application Installation Clearances

Installation on Non-Combustible Flooring

1. Cut floor opening keeping in mind clearances listed on unit rating plate. Also keep in mind gas supply connections, electrical supply, flue and air intake connections and sufficient installation and servicing clearances. See Table 1 for correct floor opening size.
2. Flange warm air plenum and lower the plenum into the opening.
3. Set the unit over the plenum and seal the plenum to the unit.
4. Ensure that the seal is adequate.

Cabinet Width	Front to Rear		Side to Side	
	in.	mm	in.	mm
B Cabinet (17.5”)	19-3/4	502	16-5/8	422
C Cabinet (21”)	19-3/4	502	16-5/8	422

NOTE: Floor opening dimensions listed are 1/4 inch (6mm) larger than the unit opening. See dimension drawing on Page 2.

Table 1. Non-Combustible Floor Opening Size

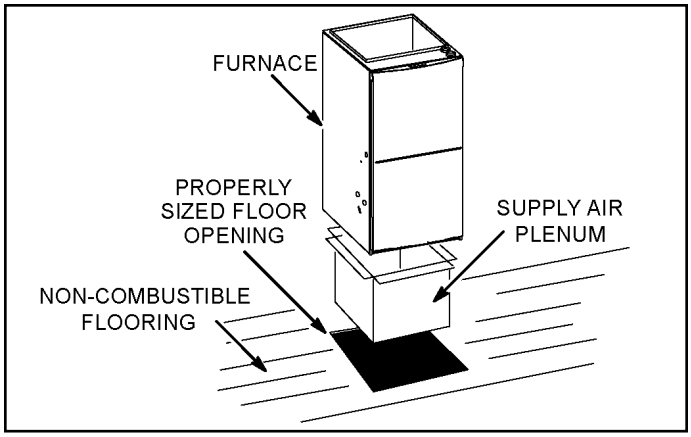

Figure 8.

Installation on Combustible Flooring

1. When unit is installed on a combustible floor, a downflow combustible flooring base must be installed between the furnace and the floor. The base must be ordered separately. See Table 2 for opening size to cut in floor.

⚠ CAUTION

The furnace and combustible flooring base shall not be installed directly on carpeting, tile, or other combustible material other than wood flooring.

Cabinet Width	CAT Number	Front to Rear		Side to Side	
		in.	mm	in.	mm
B Cabinet (17.5”)	11M60	22	559	18-3/4	467
C Cabinet (21”)	11M61	22	559	22-3/4	578

Table 2. Combustible Flooring Base Opening Size

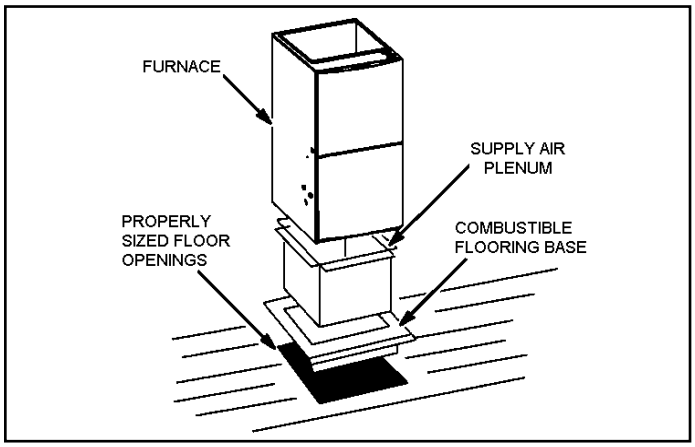

Figure 9.

2. After opening is cut, set the combustible flooring base into opening.
3. Check fiberglass strips on the combustible flooring base to make sure they are properly glued and positioned.
4. Lower supply air plenum into the combustible flooring base until plenum flanges seal against fiberglass strips.

   NOTE: *Be careful not to damage fiberglass strips. Check for a tight seal.*

5. Set the furnace over the plenum.
6. Ensure that the seal between the furnace and plenum is adequate.

Installation on Cooling Coil Cabinet

NOTE: *Downflow combustible flooring kit is not used.*

1. Refer to reverse-flow coil installation instructions for correctly sized opening in floor and installation of cabinet.
2. When cooling cabinet is in place, set and secure the furnace according to the instructions that are provided with the cooling coil. Secure the furnace to the cabinet.
3. Seal the cabinet and check for air leaks.

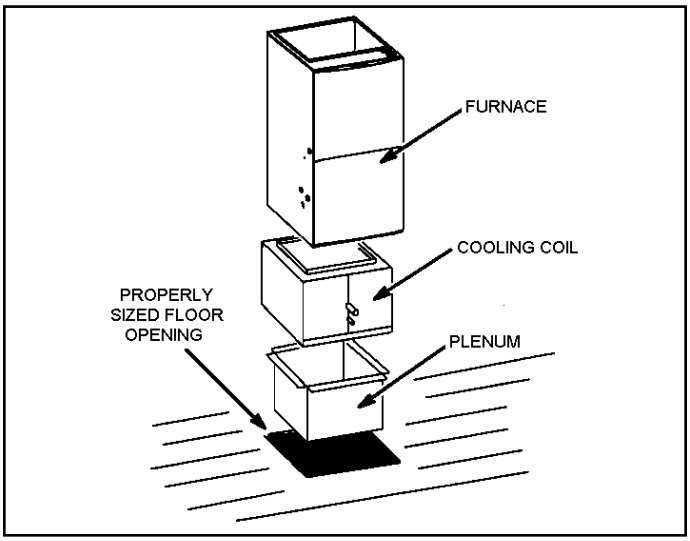

Figure 10.

Return Air Opening - Downflow Units

Return air may be brought in only through the top opening of a furnace installed in the downflow position. The following steps should be taken when installing plenum:

1. Bottom edge of plenum should be flanged with a hemmed edge (See Figure 11 or Figure 12).
2. Sealing strips should be used to ensure an airtight seal between the cabinet and the plenum.
3. In all cases, plenum should be secured to top of furnace using sheet metal screws.
4. Make certain that an adequate seal is made.

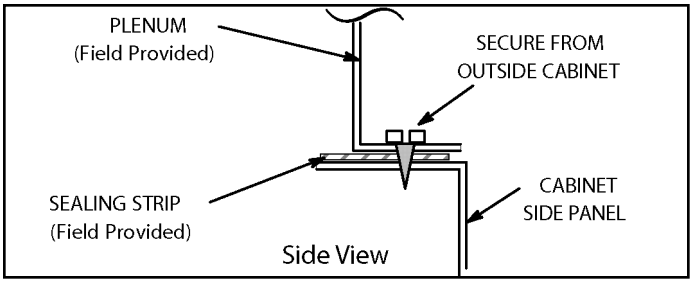

Figure 11.

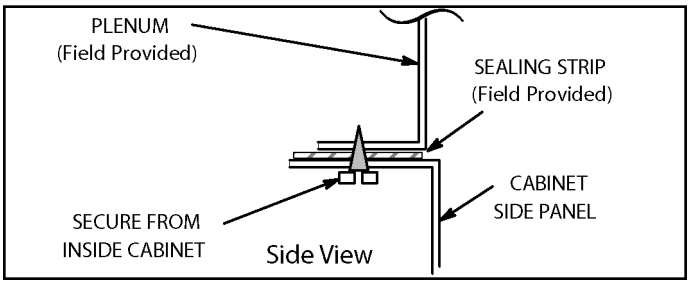

Figure 12.

Filters

This unit is not equipped with a filter or rack. A field provided filter is required for the unit to operate properly. Table 3 lists recommended filter sizes.

A filter must be in place when the unit is operating!

Furnace Cabinet Width	Minimum Filter Size	
	Side Return	Bottom Return
17-1/2”	16 x 25 x 1 (1)	16 x 25 x 1 (1)
21”		20 x 25 x 1 (1)

Table 3.

Duct System

Use industry approved standards to size and install the supply and return air duct system. This will result in a quiet and low static system that has uniform air distribution.

NOTE: *Operation of this furnace in heating mode (indoor blower operating at selected heating speed) with an external static pressure which exceeds 0.8 inches w.c. may result in erratic limit operation.*

Supply Air Plenum

If the furnace is installed without a cooling coil, a removable access panel should be installed in the supply air duct. The access panel should be large enough to permit inspection (by reflected light) of the heat exchanger for leaks after the furnace is installed. If present, this access panel must always be in place when the furnace is operating and it must not allow leaks into or from the supply air duct system.

Return Air Plenum

Return air must not be drawn from a room where this furnace, or any other gas fueled appliance (i.e., water heater), or carbon monoxide producing device (i.e., wood fireplace) is installed. When return air is drawn from a room, a negative pressure is created in the room. If a gas appliance is operating in a room with negative pressure, the flue products can be pulled back down the vent pipe and into the room. This reverse flow of the flue gas may result in incomplete combustion and the formation of carbon monoxide gas. This toxic gas might then be distributed throughout the house by the furnace duct system.

Return air can be brought in through the bottom or either side of the furnace. If a furnace with bottom return air is installed on a platform, make an airtight seal between the bottom of the furnace and the platform to ensure that the unit operates properly and safely. Use fiberglass sealing strips, caulking, or equivalent sealing method between the plenum and the furnace cabinet to ensure a tight seal. If a filter is installed, size the return air duct to fit the filter frame.

Pipe and Fittings Specifications

All pipe, fittings, primer and solvent cement must conform with American National Standard Institute and the American Society for Testing and Materials (ANSI/ASTM) standards. The solvent shall be free flowing and contain no lumps, undissolved particles or any foreign matter that adversely affects the joint strength or chemical resistance of the cement. The cement shall show no gelation, stratification, or separation that cannot be removed by stirring. Refer to Table 4 for approved piping and fitting materials.

Piping and Fittings Specifications	
Schedule 40 PVC (Pipe)	D1785
Schedule 40 PVC (Cellular Core Pipe)	F891
Schedule 40 PVC (Fittings)	D2466
Schedule 40 CPVC (Pipe)	F441
Schedule 40 CPVC (Fittings)	F438
SDR-21 PVC or SDR-26 PVC (Pipe)	D2241
SDR-21 CPVC or SDR-26 CPVC (Pipe)	F442
Schedule 40 ABS Cellular Core DWV (Pipe)	F628
Schedule 40 ABS (Pipe)	D1527
Schedule 40 ABS (Fittings)	D2468
ABS-DWV (Drain Waste & Vent) (Pipe & Fittings)	D2661
PVC-DWV (Drain Waste & Vent) Pipe & Fittings)	D2665
Primer & Solvent Cement	**ASTM Specification**
PVC & CPVC Primer	F656
PVC Solvent Cement	D2564
CPVC Solvent Cement	F493
ABS Solvent Cement	D2235
PVC/CPVC/ABS All Purpose Cement For Fittings & Pipe of the same material	D2564, D2235, F493
ABS to PVC or CPVC Transition Solvent Cement	D3138
Canada Pipe & Fitting & Solvent Cement	**Marking**
PVC & CPVC Pipe and Fittings	ULCS636
PVC & CPVC Solvent Cement	
ABS to PVC or CPVC Transition Cement	
Polypropylene Venting System	ULC-S636
PolyPro® by Duravent	
InnoFlue® by Centrotherm	ULC-S636
ECCO Polypropylene Vent™	ULC-S636

Table 4.

⚠ CAUTION

Solvent cements for plastic pipe are flammable liquids and should be kept away from all sources of ignition. Do not use excessive amounts of solvent cement when making joints. Good ventilation should be maintained to reduce fire hazard and to minimize breathing of solvent vapors. Avoid contact of cement with skin and eyes.

⚠ IMPORTANT

The exhaust and intake connections are made of PVC. Use PVC primer and solvent cement when using PVC vent pipe. When using ABS vent pipe, use transitional solvent cement to make connections to the PVC fittings in the unit.

Use PVC primer and solvent cement or ABS solvent cement meeting ASTM specifications, refer to Table 4. As an alternate, use all purpose cement, to bond ABS, PVC, or CPVC pipe when using fittings and pipe made of the same materials. Use transition solvent cement when bonding ABS to either PVC or CPVC.

Low temperature solvent cement is recommended. Metal or plastic strapping may be used for vent pipe hangers. Uniformly apply a liberal coat of PVC primer for PVC.

Canadian Applications Only – Pipe, fittings, primer and solvent cement used to vent (exhaust) this appliance must be certified to ULCS636 and supplied by a single manufacturer as part of an approved vent (exhaust) system. In addition, the first three feet of vent pipe from the furnace flue collar must be accessible for inspection.

Table 5 list the available exhaust termination kits.

Venting Options

This unit is shipped with vent exhaust / air intake connection at the top cap. See Figure 13. Using parts provided, the furnace may be field modified to have these connections on the right side of the furnace cabinet. See Figure 15 and follow the steps below. For left side venting, order kit 87W73.

1. Remove inner blower door.
2. Remove access panels.
3. Loosen hose clamps that attach rubber fittings to the white PVC pipes inside the vestibule area. See Figure 13.
4. Loosen the clamp that secures the pipes at the blower deck. See Figure 13.
5. Remove white PVC pipes, slide up and out through the top cap.

6. Remove the black plastic fitting in top cap, which previously aligned the PVC pipes.
7. Remove the sheet metal patch plate on the side of the cabinet that covers the openings for side venting option. Save screws for reuse.
8. Re-use the patch plate to cover the hole in the top cap. See Figure 14. Remove the 2 screws that secure the top cap to the furnace on the right side and re-install, securing the right edge of the patch plate and the right side of the top cap to the furnace. Use 2 self-drilling sheet metal screws (provided) to finish securing the left edge of the patch plate on the left side.
9. Use a utility knife to cut out the cabinet insulation for the right side vent / air intake.
10. Install the two 90° street elbows (provided) through the side of the cabinet. The male side of each elbow should extend down through the blower deck and connect to the rubber fittings below. Once the elbows are properly positioned, tighten each clamp.
11. Peel protective backing from side vent sealing gaskets (2) and apply to side vent sealing plates (2) as shown in Figure 15.
12. Install the side vent sealing plates and gaskets on the exterior of the cabinet as shown in Figure 15. Secure with six mounting screws (four reused and two provided from bag assembly). Holes are pre-punched in the parts and cabinet, no drilling is required.
13. Install sheet metal screws (provided) to seal extra two holes in cabinet not used with side vent clamps.

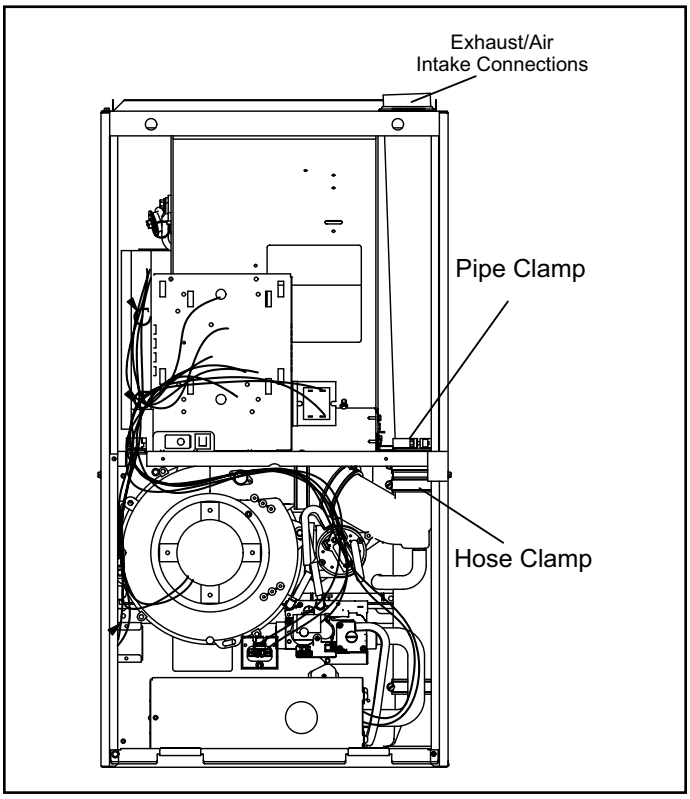

Figure 13. Top Vent Configuration

A97DSMV	VENT PIPE DIA. (in.)	STANDARD			CONCENTRIC		
		Outdoor Exhaust Accelerator (Dia. X Length)	Outdoor Exhaust Accelerator (Dia. X Length)	Flush Mount Kit	1-1/2” Concentric Kit	2” Concentric Kit	3” Concentric Kit
		1-1/2” X 12”	2” X 12”	51W11 **	71M80 or +44W92++	69M29 or +44W92++	60L46 or 44W93+
070	2	YES		YES	YES		
	2-1/2	YES		YES	YES		
	3	YES		YES	YES		
090	2		YES	YES		YES	YES
	2-1/2		YES	YES		YES	YES
	3		YES	YES		YES	YES
110	2		YES	YES		YES	YES
	2-1/2		YES	YES		YES	YES
	3		YES	YES		YES	YES

* Requires field-provided and installed 1-1/2” exhaust accelerator.

** Kit 51W11 is provided with a 1-1/2” accelerator which must be for all 2 and 2-1/2” PVC installations.

\+ Termination kits 44W92 and 44W93 are approved for use in Canadian installations to meet CSAB149.

++ The 44W92 Concentric kit is provided with a 1-1/2” accelerator Which must be installed on the exhaust outlet when this kit is used with this furnace.

Table 5. Outdoor Termination Kits Usage

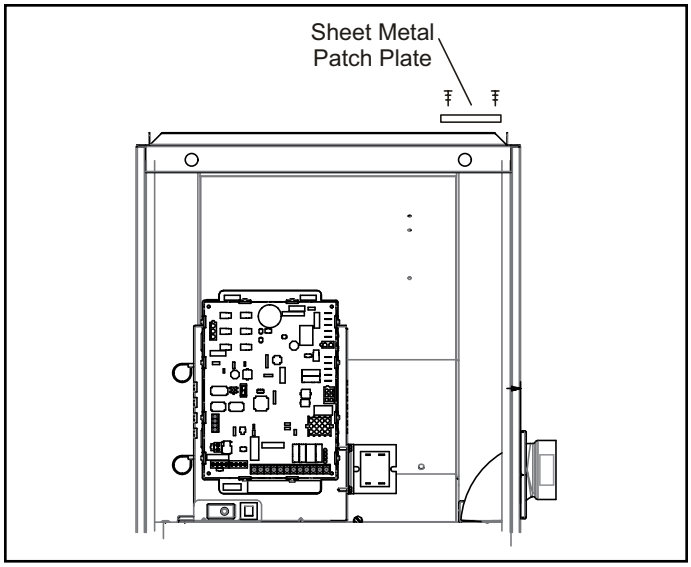

Figure 14. Install Patch Plate Over Top Cap

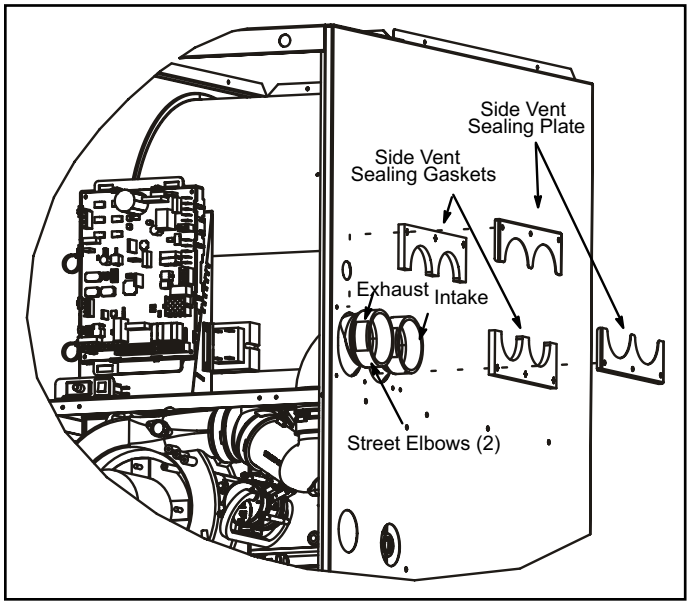

Figure 15. Right-Side Vent Configuration

Joint Cementing Procedure

All cementing of joints should be done according to the specifications outlined in ASTM D2855.

⚠ DANGER

DANGER OF EXPLOSION!

Fumes from PVC glue may ignite during system check. Allow fumes to dissipate for at least 5 minutes before placing unit into operation.

1. Measure and cut vent pipe to desired length.
2. Debur and chamfer end of pipe, removing any ridges or rough edges. If end is not chamfered, edge of pipe may remove cement from fitting socket and result in a leaking joint.
3. Clean and dry surfaces to be joined.
4. Test fit joint and mark depth of fitting on outside of pipe.
5. Uniformly apply a liberal coat of PVC primer for PVC or use a clean dry cloth for ABS to clean inside socket surface of fitting and male end of pipe to depth of fitting socket.
6. Promptly apply solvent cement to end of pipe and inside socket surface of fitting. Cement should be applied lightly but uniformly to inside of socket. Take care to keep excess cement out of socket. Apply second coat to end of pipe.

   NOTE: *Time is critical at this stage. Do not allow primer to dry before applying cement.*
7. Immediately after applying last coat of cement to pipe, and while both inside socket surface and end of pipe are wet with cement, forcefully insert end of pipe into socket until it bottoms out. Turn PVC pipe 1/4 turn during assembly (but not after pipe is fully inserted) to distribute cement evenly. DO NOT turn ABS or cellular core pipe.

   NOTE: *Assembly should be completed within 20 seconds after last application of cement. Hammer blows should not be used when inserting pipe.*
8. After assembly, wipe excess cement from pipe at end of fitting socket. A properly made joint will show a bead around its entire perimeter. Any gaps may indicate a defective assembly due to insufficient solvent.
9. Handle joints carefully until completely set.

Venting

Piping Suspension Guidelines

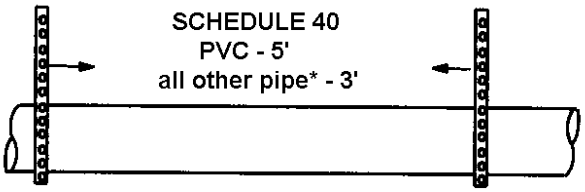

* See Table 2 for allowable pipe.

NOTE: *Isolate piping at the point where it exits the outside wall or roof in order to prevent transmission of vibration to the structure.*

Wall Thickness Guidelines

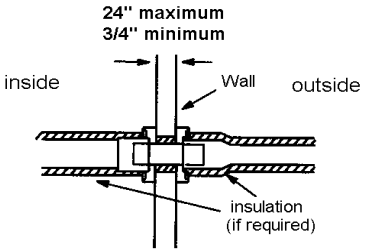

Figure 16.

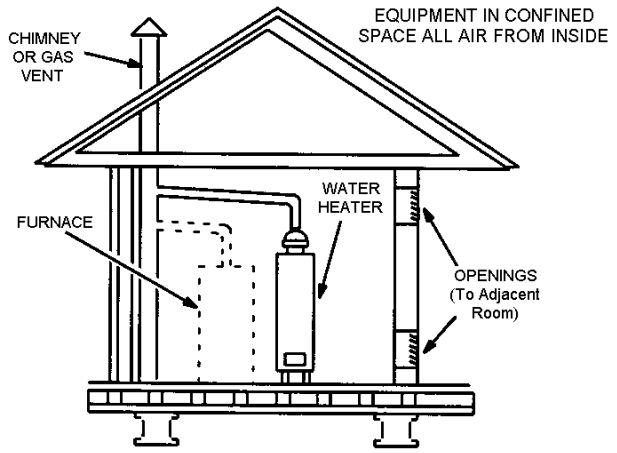

If this gas furnace replaces a furnace which was commonly vented with another gas appliance, the size of the existing vent pipe for that gas appliance must be checked. Without the heat of the original furnace flue products, the existing vent pipe is probably oversized for the single water heater or other appliance. The vent should be checked for proper draw with the remaining appliance.

Figure 17.

1. In areas where piping penetrates joist or interior walls, hole must be large enough to allow clearance on all sides of pipe through center of hole using a hanger.
2. When furnace is installed in a residence where unit is shut down for an extended period of time, such as a vacation home, make provisions for draining condensate collection from trap and lines.

Exhaust Piping

See Figure 19 and Figure 21

Route piping to outside of structure. Continue with installation following instructions given in piping termination section.

⚠ CAUTION

Do not discharge exhaust into an existing stack or stack that also serves another gas appliance. If vertical discharge through an existing unused stack is required, insert PVC pipe inside the stack until the end is even with the top or outlet end of the metal stack.

⚠ CAUTION

The exhaust vent pipe operates under positive pressure and must be completely sealed to prevent leakage of combustion products into the living space.

⚠ WARNING

CARBON MONOXIDE POISONING HAZARD

Failure to follow the steps outlined below for each appliance connected to the venting system being placed into operation could result in carbon monoxide poisoning or death.

Vent Piping Guidelines

This unit is installed only as a Direct Vent gas central furnace.

NOTE: *In Direct Vent installations, combustion air is taken from outdoors and flue gases are discharged outdoors.*

Intake and exhaust pipe sizing – Size pipe according to Table 6 and Table 7A through Table 7B. Table 6 lists the minimum vent pipe lengths permitted. Table 7A through Table 7B list the maximum pipe lengths permitted.

Regardless of the diameter of pipe used, the standard roof and wall terminations described in section Exhaust Piping Terminations should be used. Exhaust vent termination pipe is sized to optimize the velocity of the exhaust gas as it exits the termination. Refer to Table 7A through Table 7B.

In some applications which permit the use of several different sizes of vent pipe, a combination vent pipe may be used. Contact Allied Air Technical Service for more information concerning sizing of vent systems which include multiple pipe sizes.

Model	Min. Equiv. Vent Length	Example
070, 090	15 ft.*	5ft. plus 2 elbows of 2”, 2-1/2”, or 3” diameter pipe
110		5 ft. plus elbows of 2-1/2”, 3”
*Any approved termination may be added to the minimum equivalent length listed.		

Table 6. Minimum Vent Pipe Lengths

NOTE: *The exhaust collar on all models is sized to accommodate 2” Schedule 40 vent pipe. Contact the Application Department for more information concerning sizing of vent systems which include multiple pipe sizes.*

NOTE: *If right side venting option is used, you must include the elbow at the furnace in the elbow count. If transitioning to 3” diameter pipe, this elbow equates to 20’ of equivalent vent length for all models.*

NOTE: *All horizontal runs of exhaust pipe must slope back toward unit. A minimum of 1/4" (6mm) drop for each 12" (305mm) of horizontal run is mandatory for drainage.*

NOTE: *Exhaust pipe MUST be glued to furnace exhaust fittings.*

NOTE: *Exhaust piping should be checked carefully to make sure there are no sags or low spots.*

Use the following steps to correctly size vent pipe diameter.

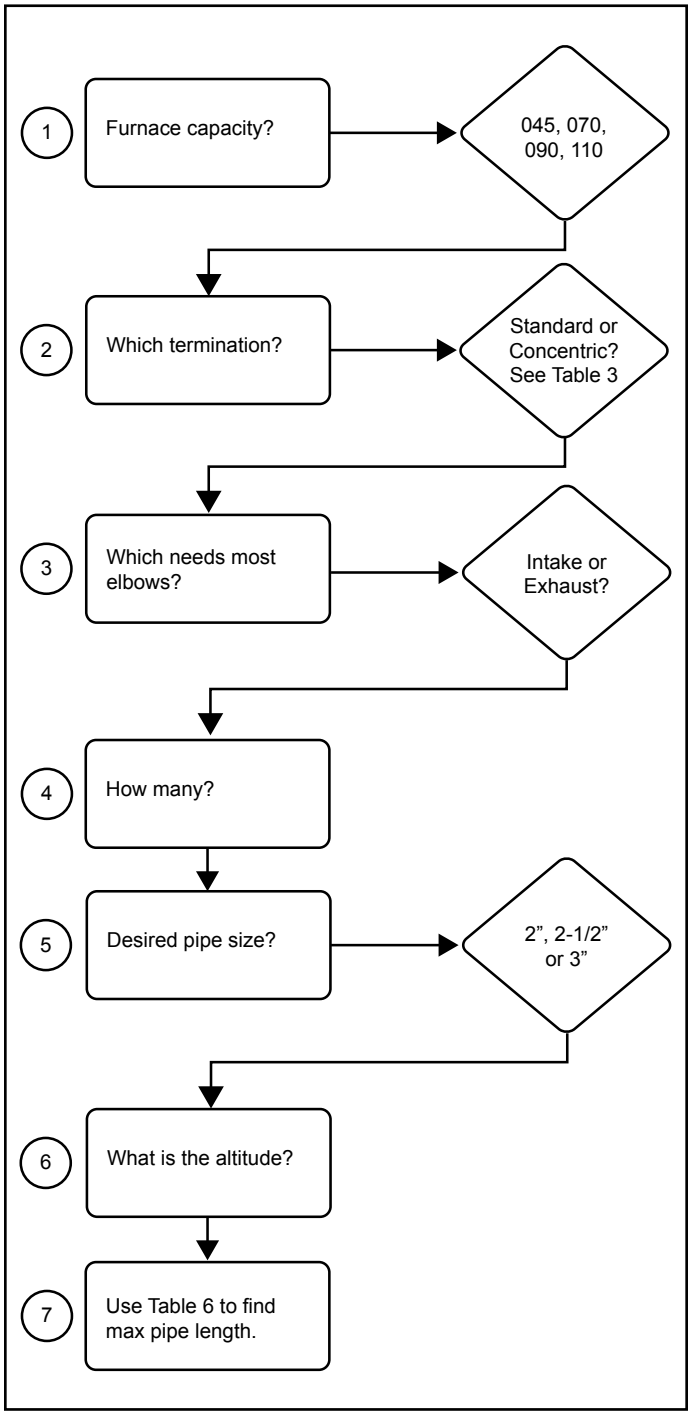

Figure 18.

Maximum Allowable Intake or Exhaust Vent Length (feet)

Standard Termination at Elevation 0 - 4,500 ft									
Number of 90° Elbows Used	2” Pipe			2-1/2” Pipe			3” Pipe		
	Model			Model			Model		
	70	90	110	70	90	110	70	90	110
1	86	64	n/a	135	88	38	157	138	113
2	81	59		130	83	33	152	133	108
3	76	54		125	78	28	147	128	103
4	71	49		120	73	23	142	123	98
5	66	44		115	68	18	137	118	93
6	61	39		110	63	13	132	113	88
7	56	34		105	58	8	127	108	83
8	51	29		100	53	n/a	122	103	78
9	46	24		95	48		117	98	73
10	41	19		90	43		112	93	68
Standard Termination at Elevation 4,501 - 10,000 ft									
Number of 90° Elbows Used	2” Pipe			2-1/2” Pipe			3” Pipe		
	Model			Model			Model		
	70	90	110	70	90	110	70	90	110
1	61	39	n/a	110	63	n/a	132	113	88
2	56	34		105	58		127	108	83
3	51	29		100	53		122	103	78
4	46	24		95	48		117	98	73
5	41	19		90	43		112	93	68
6	36	14		85	38		107	88	63
7	31	9		80	33		102	83	58
8	26	n/a		75	28		97	78	53
9	21			70	23		92	73	48
10	16			65	18		87	68	43
*Size intake and exhaust pipe length separately. Values in table are for intake or exhaust not combined total. Both intake and exhaust must be same pipe size.									

Table 7A.

Maximum Allowable Intake or Exhaust Vent Length (feet)

Concentric Termination at Elevation 0 - 4,500 ft									
Number of 90° Elbows Used	2" Pipe			2-1/2" Pipe			3" Pipe		
	Model			Model			Model		
	70	90	110	70	90	110	70	90	110
1	78	62	n/a	125	84	34	141	134	109
2	73	57		120	79	29	136	129	104
3	68	52		115	74	24	131	124	99
4	63	47		110	69	19	126	119	94
5	58	42		105	64	14	131	114	89
6	53	37		100	59	9	116	109	84
7	48	32		95	54	n/a	111	104	79
8	43	27		90	49		106	99	74
9	38	22		85	44		101	94	69
10	33	17		80	39		96	89	64
Concentric Termination Elevation 4,501 - 10,000 ft									
Number of 90° Elbows Used	2" Pipe			2-1/2" Pipe			3" Pipe		
	Model			Model			Model		
	70	90	110	70	90	110	70	90	110
1	53	37	n/a	100	59	n/a	116	109	84
2	48	32		95	54		111	104	79
3	43	27		90	49		106	99	74
4	38	22		85	44		101	94	69
5	33	17		80	39		96	89	64
6	28	12		75	34		91	84	59
7	23	7		70	29		86	79	54
8	18	n/a		65	24		81	74	49
9	13			60	19		76	69	44
10	8			55	14		71	64	39
*Size intake and exhaust pipe length separately. Values in table are for intake or exhaust not combined total. Both intake and exhaust must be same pipe size.									

Table 7B.

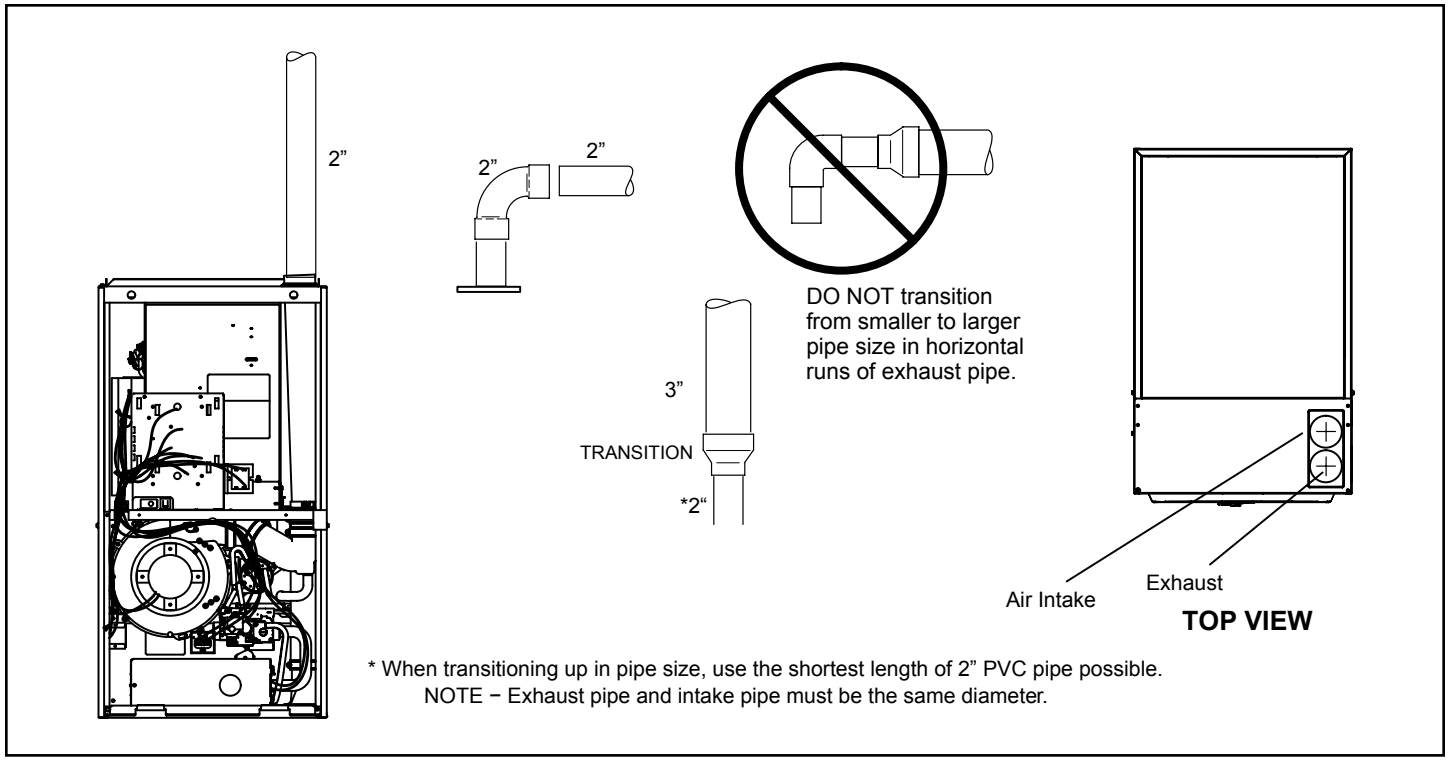

Figure 19. Typical Exhaust Pipe Connections and Condensate Trap Installation

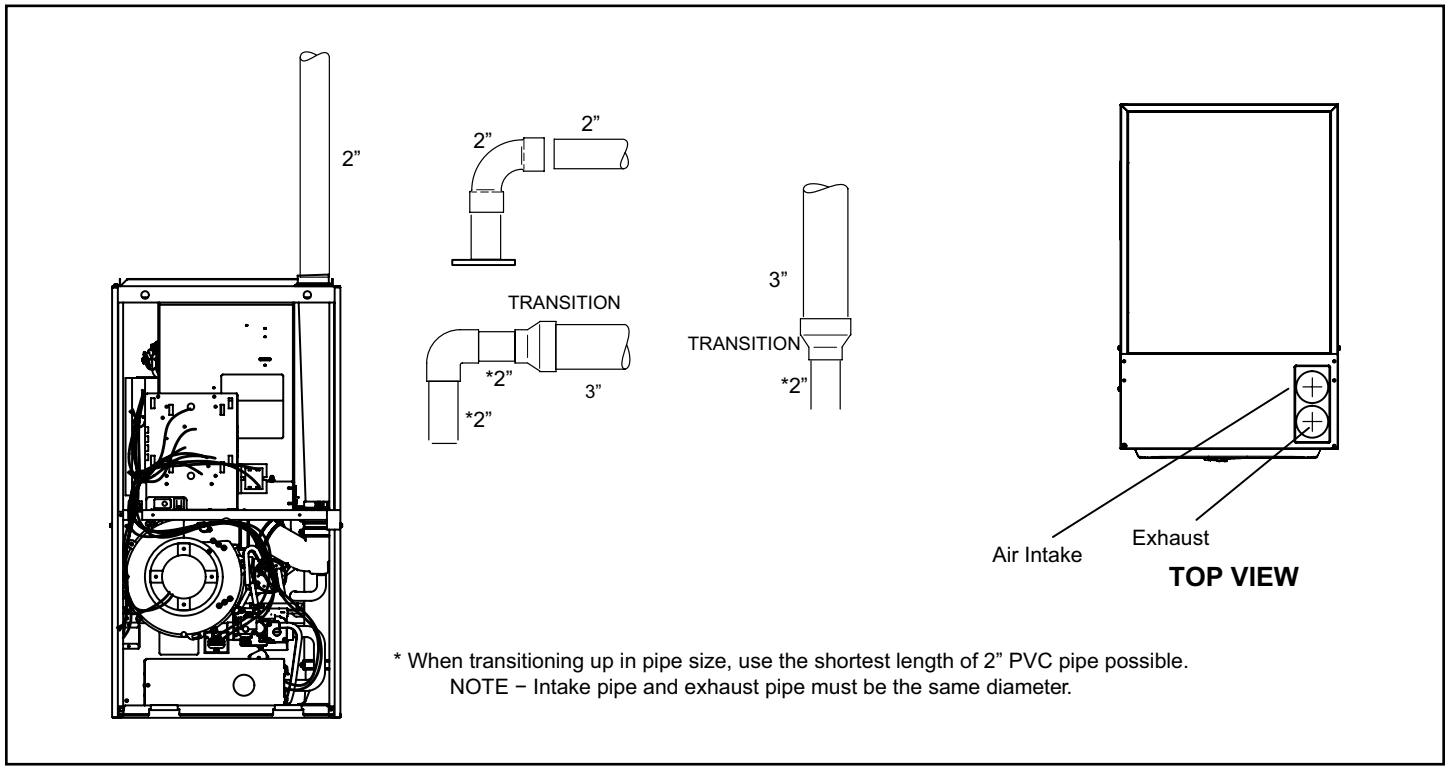

Figure 20. Typical Air Intake Pipe Connections

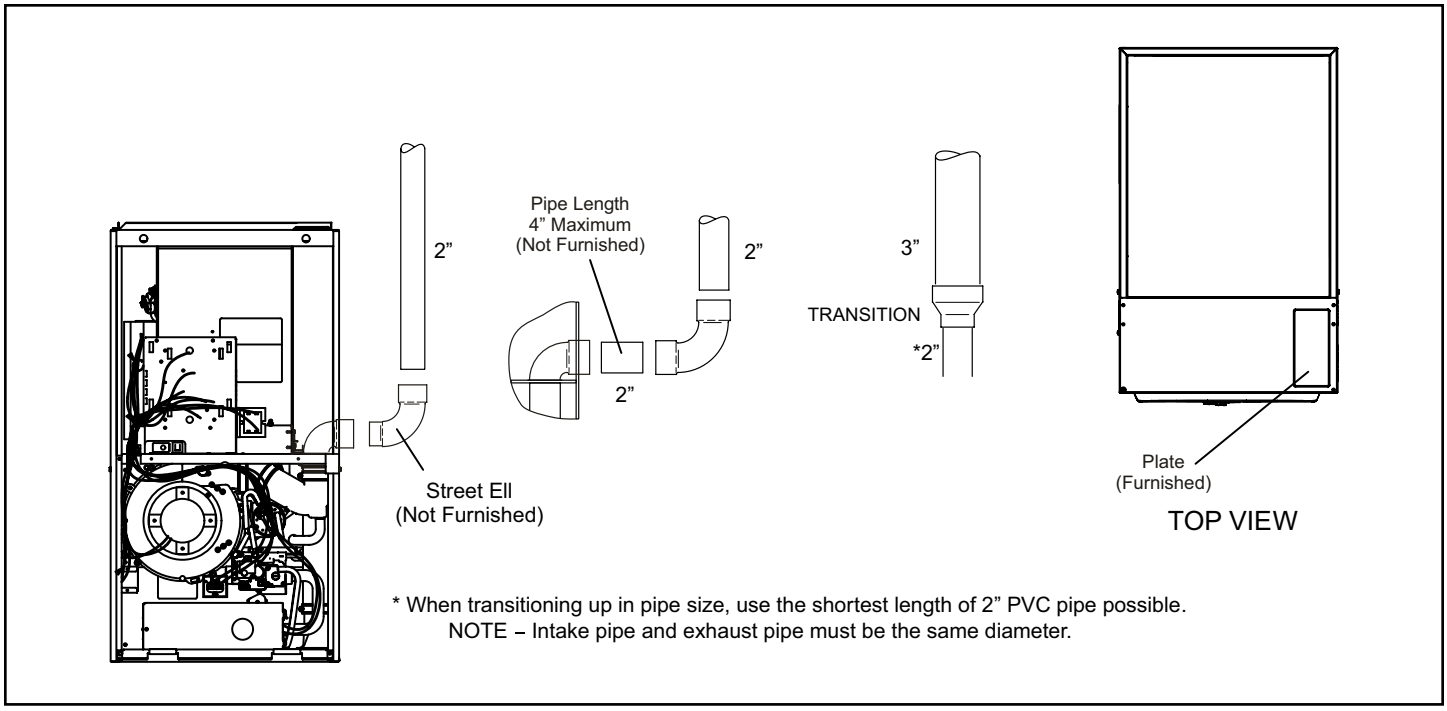

Figure 21. Typical Exhaust Pipe Connections with Right Side Vent Option

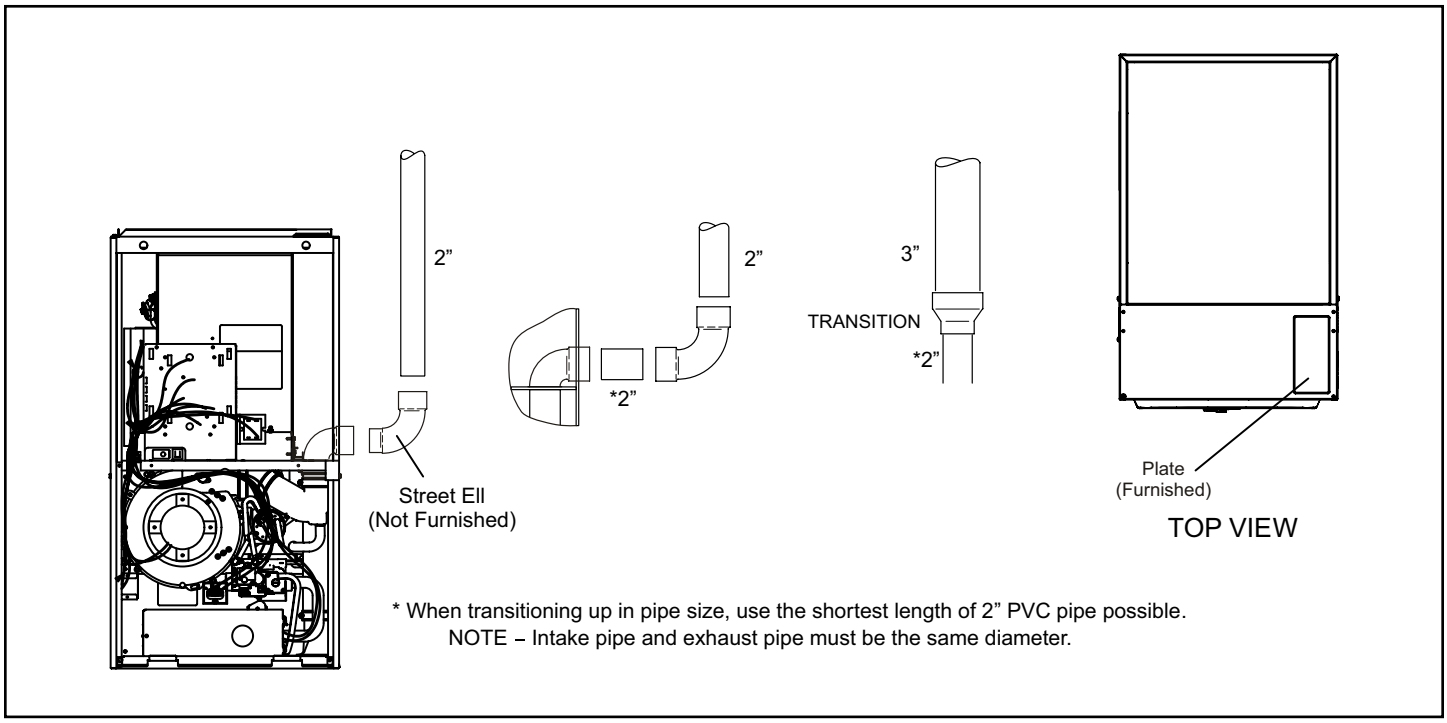

Figure 22. Typical Air Intake Pipe Connections with Right Side Vent Option

VENT TERMINATION CLEARANCES FOR DIRECT VENT INSTALLATIONS IN THE USA AND CANADA

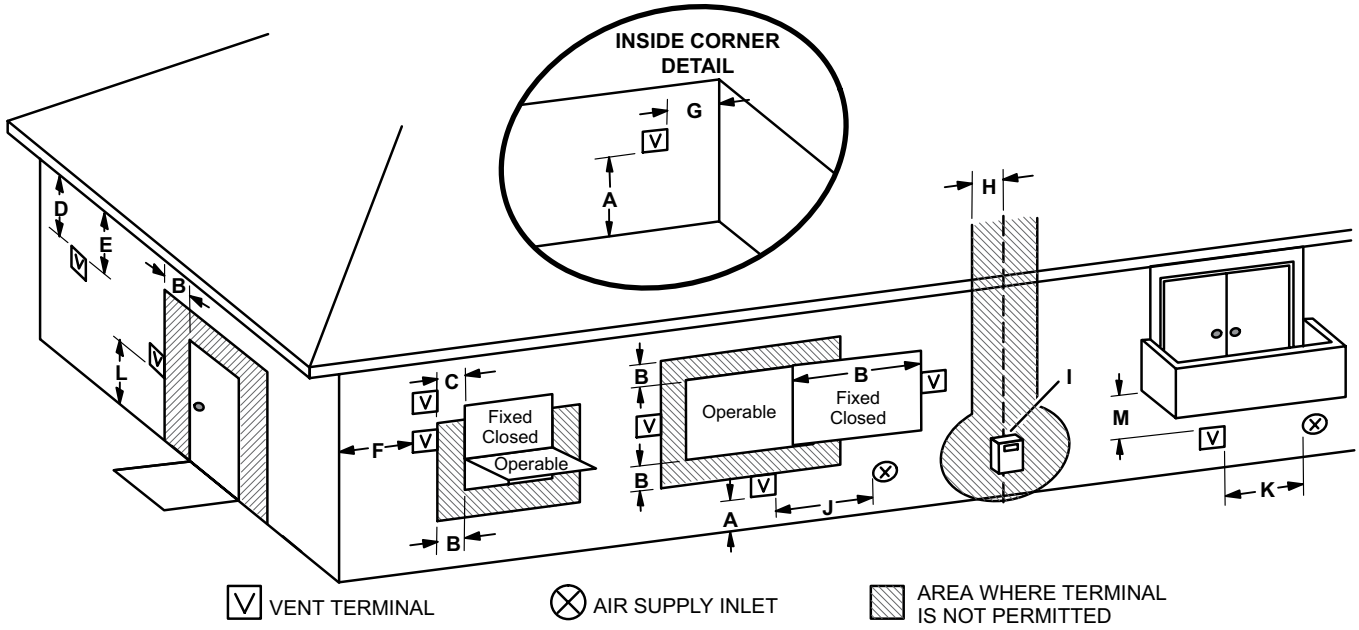

		US Installations[1]	Canadian Installations[2]
A =	Clearance above grade, veranda, porch, deck or balcony	12 inches (305mm) or 12 in. (305mm) above average snow accumulation.	12 inches (305mm) or 12 in. (305mm) above average snow accumulation.
B =	Clearance to window or door that may be opened	6 inches (152mm) for appliances <10,000 Btuh (3kw), 9 inches (228mm) for appliances > 10,000 Btuh (3kw) and <50,000 Btuh (15kw), 12 inches (305mm) for appliances > 50,000 Btuh (15kw)	6 inches (152mm) for appliances <10,000 Btuh (3kw), 12 inches (305mm) for appliances > 10,000 Btuh (3kw) and <100,000 Btuh (30kw), 36 inches (.9m) for appliances > 100,000 Btuh (30kw)
C =	Clearance to permanently closed window	* 12”	* 12”
D =	Vertical clearance to ventilated soffit located above the terminal within a horizontal distance of 2 feet (610mm) from the center line of the terminal	* Equal to or greater than soffit depth	* Equal to or greater than soffit depth
E =	Clearance to unventilated soffit	* Equal to or greater than soffit depth	* Equal to or greater than soffit depth
F =	Clearance to outside corner	* No minimum to outside corner	* No minimum to outside corner
G =	Clearance to inside corner	*	*
H =	Clearance to each side of center line extended above meter / regulator assembly	3 feet (.9m) within a height 15 feet (4.5m) above the meter / regulator assembly	3 feet (.9m) within a height 15 feet (4.5m) above the meter / regulator assembly
I =	Clearance to service regulator vent outlet	* 3 feet (.9m)	3 feet (.9m)
J =	Clearance to non-mechanical air supply inlet to building or the combustion air inlet to any other appliance	6 inches (152mm) for appliances <10,000 Btuh (3kw), 9 inches (228mm) for appliances > 10,000 Btuh (3kw) and <50,000 Btuh (15kw), 12 inches (305mm) for appliances > 50,000 Btuh (15kw)	6 inches (152mm) for appliances <10,000 Btuh (3kw), 12 inches (305mm) for appliances > 10,000 Btuh (3kw) and <100,000 Btuh (30kw), 36 inches (.9m) for appliances > 100,000 Btuh (30kw)
K =	Clearance to mechanical air supply inlet	3 feet (.9m) above if within 10 feet (3m) horizontally	6 feet (1.8m)
L =	Clearance above paved sidewalk or paved driveway located on public property	* 7 feet (2.1m)	7 feet (2.1m)†
M =	Clearance under veranda, porch, deck or balcony	*12 inches (305mm)‡	12 inches (305mm)‡

[1] In accordance with the current ANSI Z223.1/NFPA 54 Natural Fuel Gas Code

[2] In accordance with the current CSA B149.1, Natural Gas and Propane Installation Code

† A vent shall not terminate directly above a sidewalk or paved driveway that is located between two single family dwellings and serves both dwellings.

‡ Permitted only if veranda, porch, deck or balcony is fully open on a minimum of two sides beneath the floor. Allied recommends avoiding this location if possible.

*For clearances not specified in ANSI Z223.1/NFPA 54 or CSA B149.1, clearance will be in accordance with local installation codes and the requirements of the gas supplier and these installation instructions.”

Figure 23. Vent Termination Clearances for Direct Vent Installations in the USA and Canada

FIELD FABRICATED WALL TERMINATION

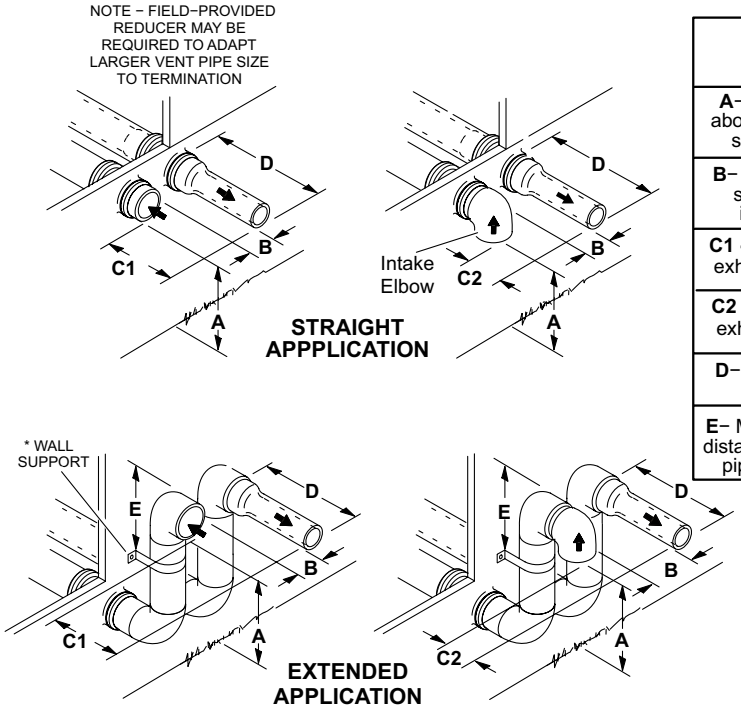

	2” (51mm) Vent Pipe	3” (76mm) Vent Pipe
A− Minimum clearance above grade or average snow accumulation	12” (305 mm)	12” (305 mm)
B− Maximum horizontal separation between intake and exhaust	6” (152 mm)	6” (152 mm)
C1 -Minimum from end of exhaust to inlet of intake	8” (203 mm)	8” (203 mm)
C2 -Minimum from end of exhaust to inlet of intake	6” (152 mm)	6” (152 mm)
D− Maximum exhaust pipe length	12” (305 mm)	20” (508 mm)
E− Maximum wall support distance from top of each pipe (intake/exhaust)	6” (152 mm)	6” (152 mm)

* Use wall support every 24” (610 mm). Use two wall supports if extension is greater than 24” (610 mm) but less than 48” (1219 mm).
NOTE − One wall support must be within 6” (152 mm) from top of each pipe (intake and exhaust) to prevent movement in any direction.

ALTERNATE TERMINATIONS (TEE & FORTY−FIVE DEGREE ELBOWS ONLY)

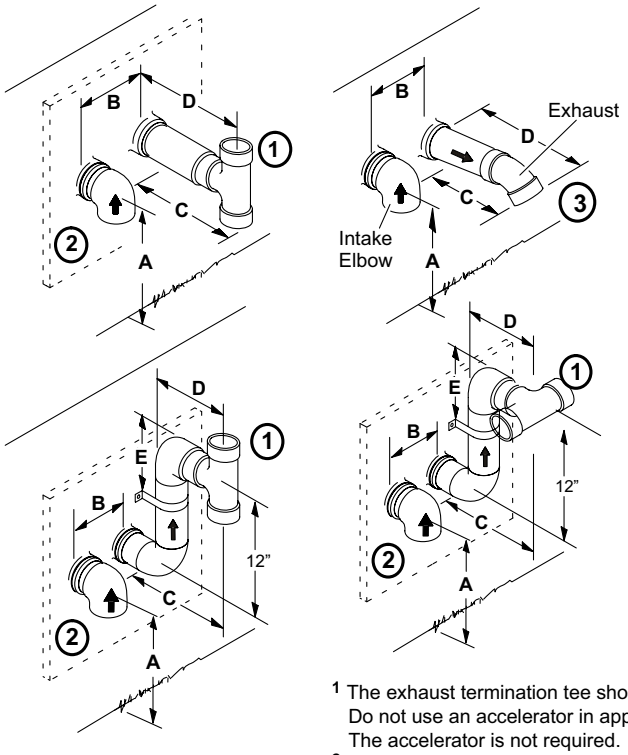

	2” (51MM) Vent Pipe	3” (76MM) Vent Pipe
A− Clearance above grade or average snow accumulation	12” (305 mm) Min.	12” (305 mm) Min.
B− Horizontal separation between intake and exhaust	6” (152 mm) Min. 24” (610 mm) Max.	6” (152 mm) Min. 24” (610 mm) Max.
C− Minimum from end of exhaust to inlet of intake	9” (227 mm) Min.	9” (227 mm) Min.
D− Exhaust pipe length	12” (305 mm) Min. 16” (405 mm) Max.	12” (305 mm) Min. 20” (508 mm) Max.
E− Wall support distance from top of each pipe (intake/exhaust)	6” (152 mm) Max.	6” (152 mm) Max.

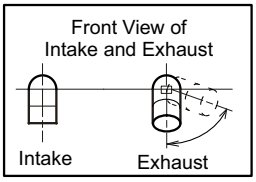

[1] The exhaust termination tee should be connected to the 2” or 3” PVC flue pipe as shown in the illustration. Do not use an accelerator in applications that include an exhaust termination tee. The accelerator is not required.

[2] As required. Flue gas may be acidic and may adversely affect some building materials. If a side wall vent termination is used and flue gases will impinge on the building materials, a corrosion-resistant shield (24 inches square) should be used to protect the wall surface. If optional tee is used, the protective shield is recommended. The shield should be constructed using wood, sheet metal or other suitable material. All seams, joints, cracks, etc. in affected area, should be sealed using an appropriate sealant.

[3] Exhaust pipe 45° elbow can be rotated to the side away from the combustion air inlet to direct exhaust away from adjacent property. The exhaust must never be directed toward the combustion air inlet.

Figure 24. Field-Fabricated Wall and Alternate Terminations

General Guidelines for Vent Terminations

In Direct Vent applications, combustion air is taken from outdoors and the flue gases are discharged to the outdoors. This gas furnace is classified as a direct vent, Category IV gas furnace.

In Direct Vent applications, the vent termination is limited by local building codes. In the absence of local codes, refer to the current National Fuel Gas Code ANSI Z223-1/ NFPA 54 in U.S.A., and current CSA-B149 Natural Gas and Propane Installation Codes in Canada for details.

Position termination according to location given in Figure 23. In addition, position termination so it is free from any obstructions and 12" above the average snow accumulation.

At vent termination, care must be taken to maintain protective coatings over building materials (prolonged exposure to exhaust condensate can destroy protective coatings). It is recommended that the exhaust outlet not be located within 6 feet (1.8m) of a condensing unit because the condensate can damage the painted coating.

NOTE: *See Table 8 for maximum allowed exhaust pipe length without insulation in unconditioned space during winter design temperatures below 32°F (O°C). If required, exhaust pipe should be insulated with 1/2" (13mm) Armaflex or equivalent. In extreme cold climate areas, 3/4" (19mm) Armaflex or equivalent may be necessary. Insulation on outside runs of exhaust pipe must be painted or wrapped to protect insulation from deterioration. Exhaust pipe insulation may not be necessary in some specific applications.*

⚠ IMPORTANT

Do not use screens or perforated metal in exhaust terminations. Doing so will cause freeze-ups and may block the terminations.

⚠ IMPORTANT

FOR CANADIAN INSTALLATIONS ONLY:

In accordance to CSA International B149 installation codes, the minimum allowed distance between the combustion air intake inlet and the exhaust outlet of other appliances shall not be less than 12 inches (305 mm).

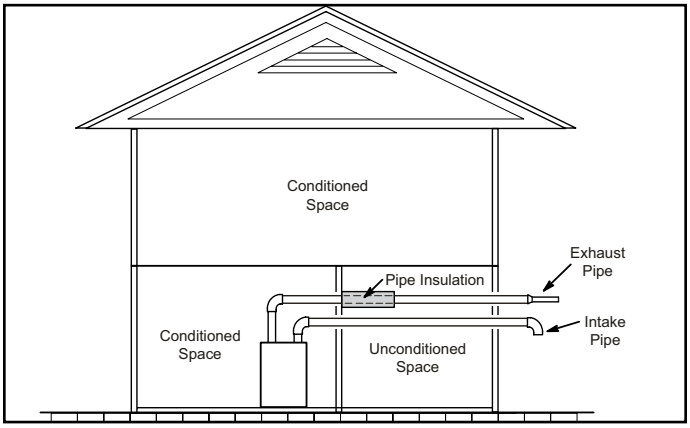

Figure 25. Insulating Exhaust Pipe in an Unconditioned Space

Maximum Allowable Vent Pipe Length without Insulation in Unconditioned Space for Winter Design Temperatures Modulating High Efficiency Furnace

Winter Design Temperatures[1] ºF (ºC)	Vent Pipe Diameter	070		090		110	
		PVC	[2]PP	PVC	[2]PP	PVC	[2]PP
32 to 21 (0 to -6)	2 in.	11	9	14	12	18	15
	2-1/2 in.	7	N/A	10	N/A	12	N/A
	3 in.	N/A	N/A	6	6	8	8
20 to 1 (-7 to -17)	2 in.	N/A	N/A	6	4	8	6
	2-1/2 in.	N/A	N/A	N/A	N/A	N/A	N/A
	3 in.	N/A	N/A	N/A	N/A	N/A	N/A
0 to -20 (-18 to -29)	2 in.	N/A	N/A	N/A	N/A	N/A	N/A
	2-1/2 in.	N/A	N/A	N/A	N/A	N/A	N/A
	3 in.	N/A	N/A	N/A	N/A	N/A	N/A

[1] Refer to 99% Minimum Design Temperature table provided in the current edition of the ASHRAE Fundamentals Handbook.

[2] Poly-Propylene vent pipe (PP) by Duravent and Centrotherm

NOTE - Concentric terminations are the equivalent of 5' and should be considered when measuring pipe length.

NOTE - Maximum uninsulated vent lengths listed may include the termination (vent pipe exterior to the structure) and cannot exceed 5 linear feet or the maximum allowable intake or exhaust vent length listed in Table 8 or Table 7A through Table 7B.

NOTE - If insulation is required in an unconditioned space, it must be located on the pipe closed to the furnace.

Table 8.

Details of Intake and Exhaust Piping Terminations for Direct Vent Installations

NOTE: *In Direct Vent installations, combustion air is taken from outdoors and flue gases are discharged to outdoors.*

Intake and exhaust pipes may be routed either horizontally through and outside wall or vertically through the roof. In attic or closet installations, vertical termination through the roof is preferred. Figure 26 through Figure 35 show typical terminations.

1. Intake and exhaust terminations are not required to be in the same pressure zone. You may exit the intake on one side of the structure and the exhaust on another side (Figure 27). You may exit the exhaust out the roof and the intake out the side of the structure (Figure 28).
2. Intake and exhaust pipes should be placed as close together as possible at termination end (refer to illustrations). Minimum separation is 3” (76 mm) on roof terminations and 6” (152 mm) on sidewall terminations.

   NOTE: *When venting in different pressure zones, the maximum separation requirement of intake and exhaust pipe DOES NOT apply.*
3. On roof terminations, the intake piping should terminate straight down using two 90° elbows (See Figure 26).
4. Exhaust piping must terminate straight out or up as shown. A reducer is required on the exhaust piping at the point where it exits the structure to improve the velocity of exhaust away from the intake piping. See Table 7A through Table 7B.

   NOTE: *Care must be taken to avoid recirculation of exhaust back into intake pipe.*
5. On field supplied terminations for sidewall exit, exhaust piping may extend a maximum of 12 inches (305 mm) for 2” PVC and 20 inches (508 mm) for 3” (76 mm) PVC beyond the outside wall. Intake piping should be as short as possible. See Figure 24.
6. On field supplied terminations, a minimum distance between the end of the exhaust pipe and the end of the intake pipe without a termination elbow is 8” and a minimum distance of 6” with a termination elbow. See Figure 24.

Model	Exhaust Pipe Size	Termination Pipe Size
070*	2”, 2-1/2”, or 3”	1-1/2”
090*	2”, 2-1/2”, or 3”	2”
110	2-1/2” or 3”	2”
**070 and 090 units installed with flush mount termination must use the 1-1/2” accelerator supplied with the kit.*		

Table 9. Exhaust Pipe Termination Size Reduction

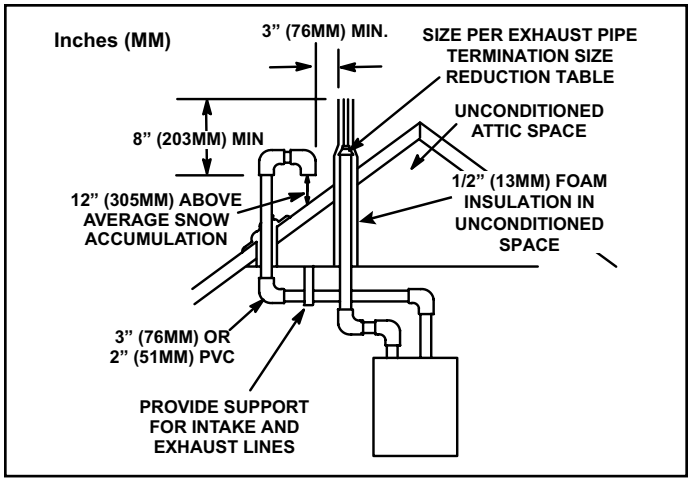

Figure 26. Direct Vent Roof Termination Kit (15F75 or 44J41)

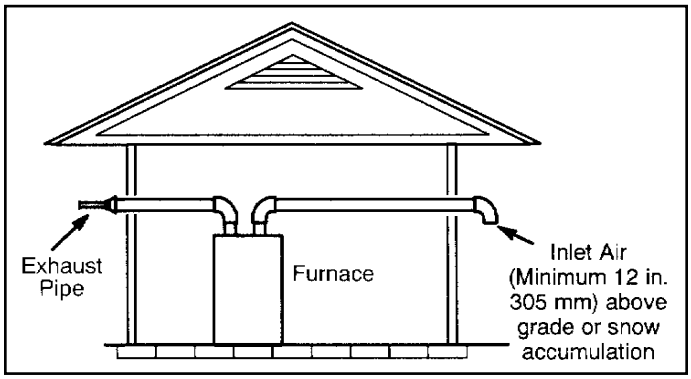

Figure 27. Exiting Exhaust and Intake Vent

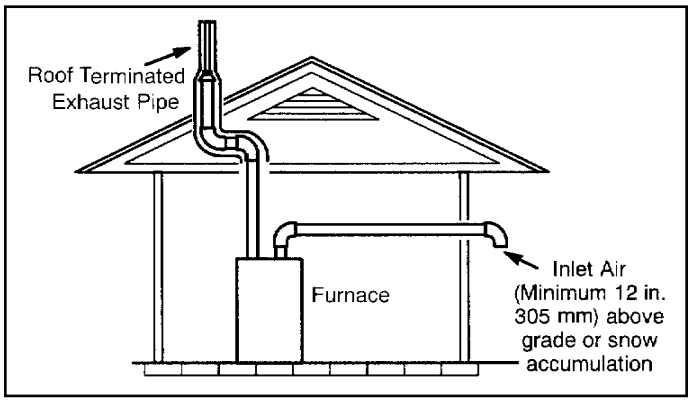

Figure 28. Exiting Exhaust and Intake Vent

7. If intake and exhaust piping must be run up a side wall to position above snow accumulation or other obstructions, piping must be supported every 24” (610 mm) as shown in Figure 24. In addition, close coupled wall termination must be extended for use in this application. Exhaust and intake piping that is run up a wall is considered to be in an unconditioned space, so piping should be sized according to Table 8. The intake piping may be equipped with a 90° elbow turndown. Using turndown will add 5 feet (1.5 m) to the equivalent length of the pipe.

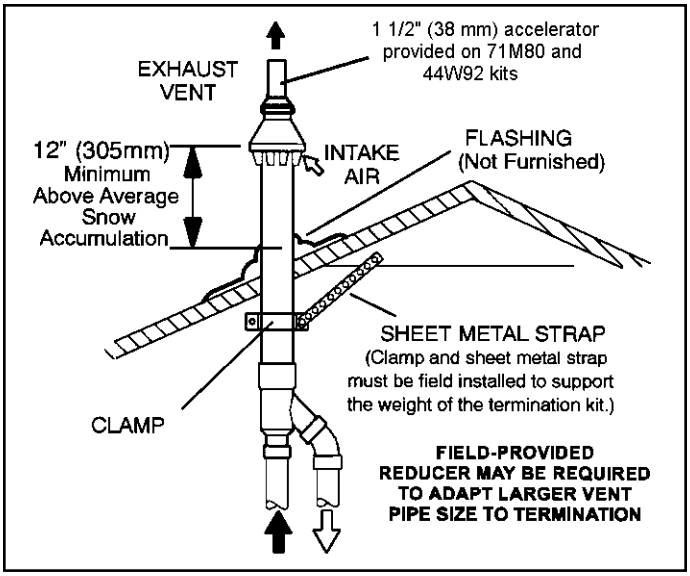

Figure 29. Direct Vent Concentric Roof Top Termination
71M80, 69M29 or 60L46 (US)
44W92 or 44W93 (Canada)

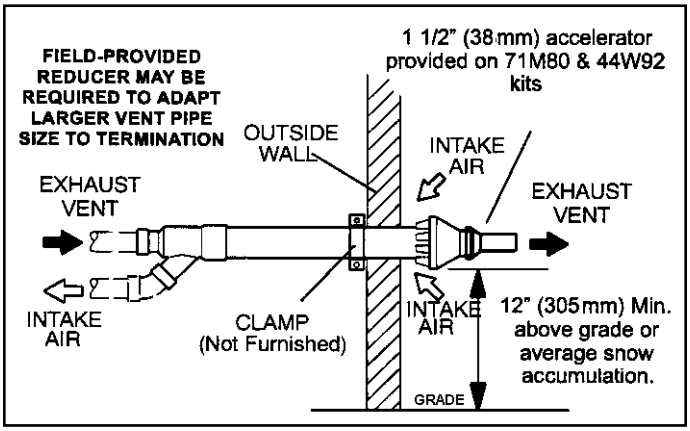

Figure 30. Direct Vent Concentric Wall Termination
71M80, 69M29 OR 60L46 (US)
44W92 or 44W93 (Canada)

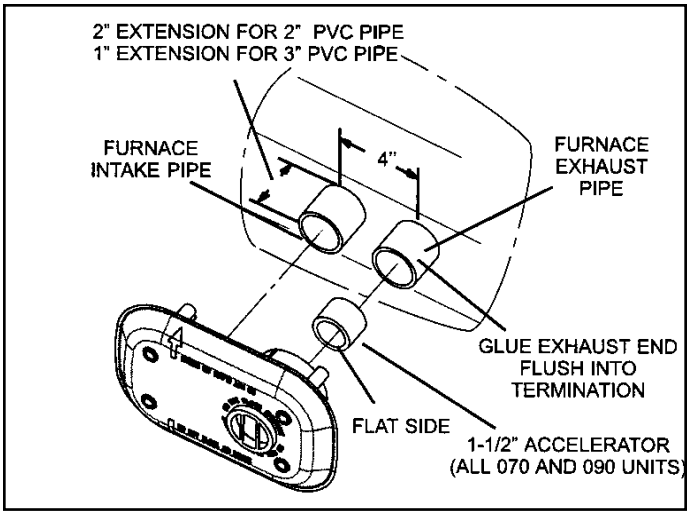

Figure 31. Flush Mount Side Wall Termination
51W11

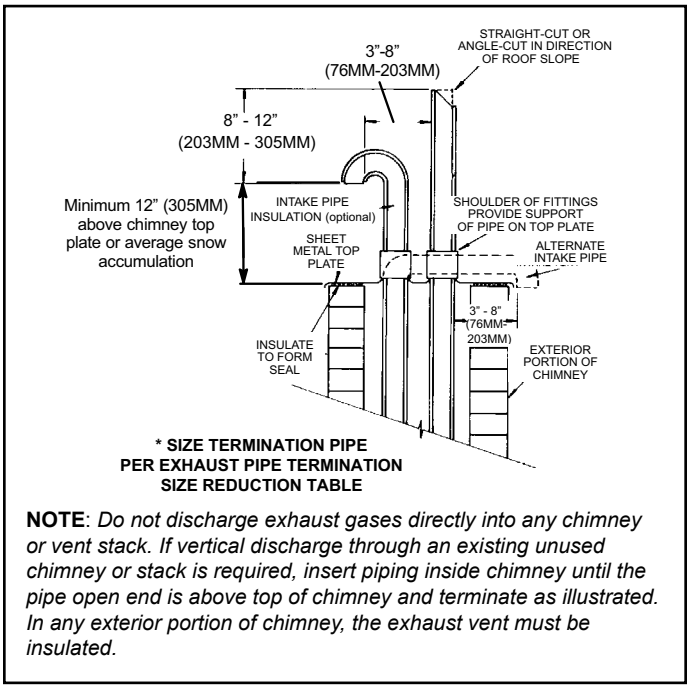

NOTE: *Do not discharge exhaust gases directly into any chimney or vent stack. If vertical discharge through an existing unused chimney or stack is required, insert piping inside chimney until the pipe open end is above top of chimney and terminate as illustrated. In any exterior portion of chimney, the exhaust vent must be insulated.*

Figure 32. Direct Vent Application Using Existing Chimney

Exhaust through Crawl Space Vent Option

All 33” condensing gas furnaces (92%+) are now approved to be vented down through a crawl space. Ensure a vent pipe drain kit, 51W18 (USA) or 15Z70 (Canada), is used as directed through the floor joists and into the crawl space. See the following figures.

Consult the vent tables for vent lengths and approved materials.

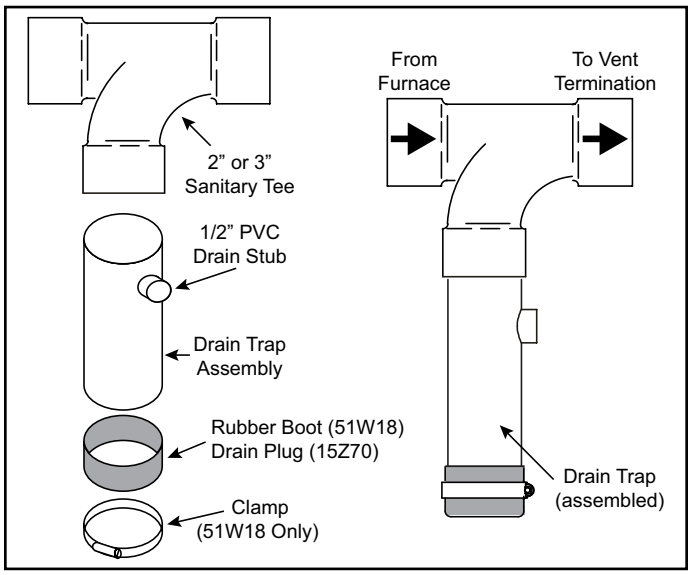

Figure 33. Kit 51W18 (USA) / 15Z70 (Canada) Parts Identification and Assembly

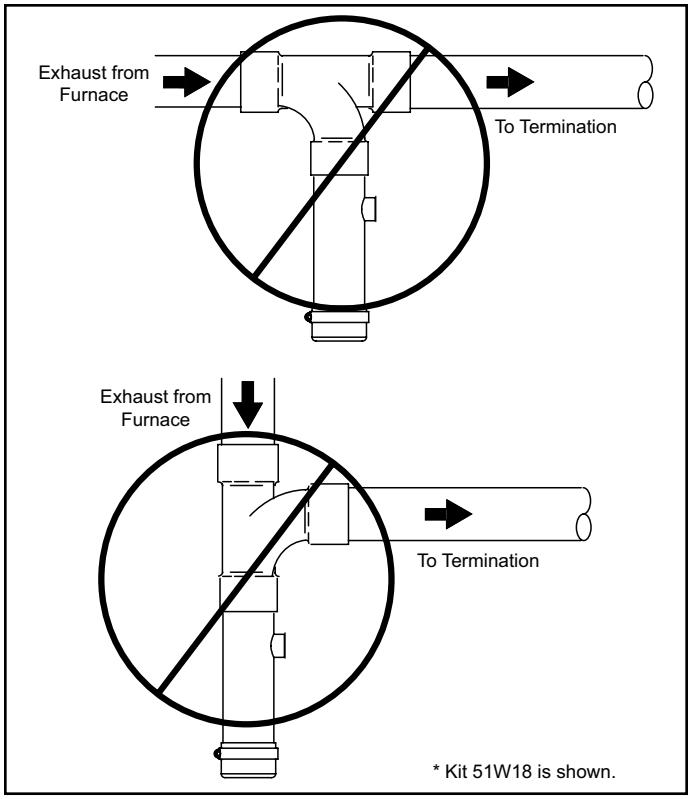

Figure 34. Crawl Space Vent Pipe Drain Trap Assembled Incorrectly

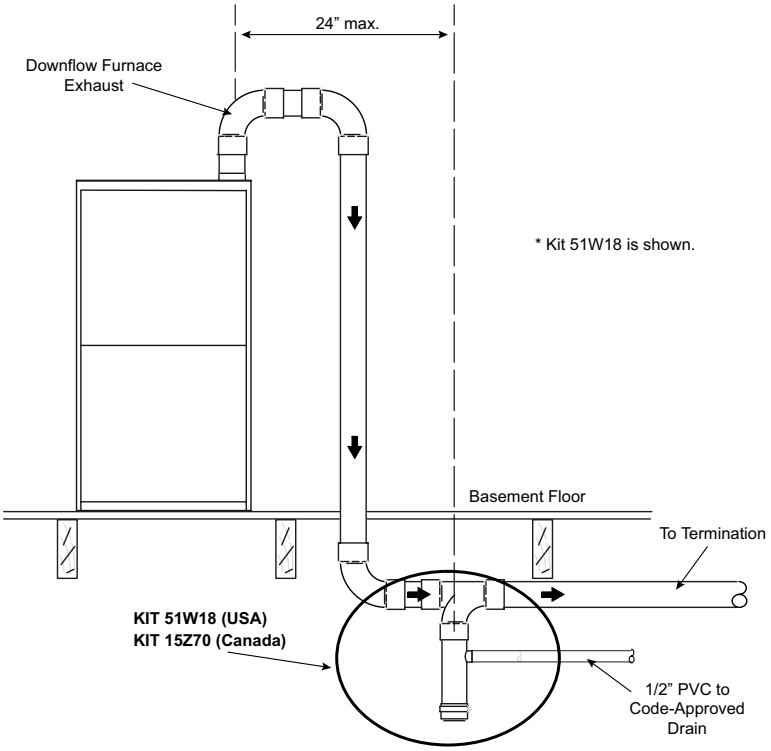

NOTE: *Upflow furnaces exhaust from the left side. All dimensions shown are typical for upflow or downflow furnaces.*

NOTE: *All horizontal runs of exhaust pipe must slope back toward the kit a minimum of 1/4” (6mm) for each 12” (305mm) to ensure drainage.*

Figure 35. Upflow or Downflow Furnace with Exhaust through Crawl Space

Condensate Piping

This unit is designed for either right or left side exit of condensate piping. Refer to Figure 36 and Figure 37 for condensate trap locations.

NOTE: *If necessary, the condensate trap may be installed up to 5 ft. away, using PVC pipe, from the furnace. Piping from furnace must slope down a minimum of 1/4" per ft. toward trap.*

1. Determine which side condensate piping will exit the unit, location of trap, field-provided fittings and length of PVC pipe required to reach available drain.
2. Use a large flat head screw driver or a 1/2" drive socket extension and remove plug (Figure 36) from the cold end header box at the appropriate location on the side of the unit. Install provided 3/4 NPT street elbow fitting into cold end header box. Use Teflon tape or appropriate pipe dope.
3. Install the cap over the clean out opening at the base of the trap. Secure with clamp. See Figure 41.

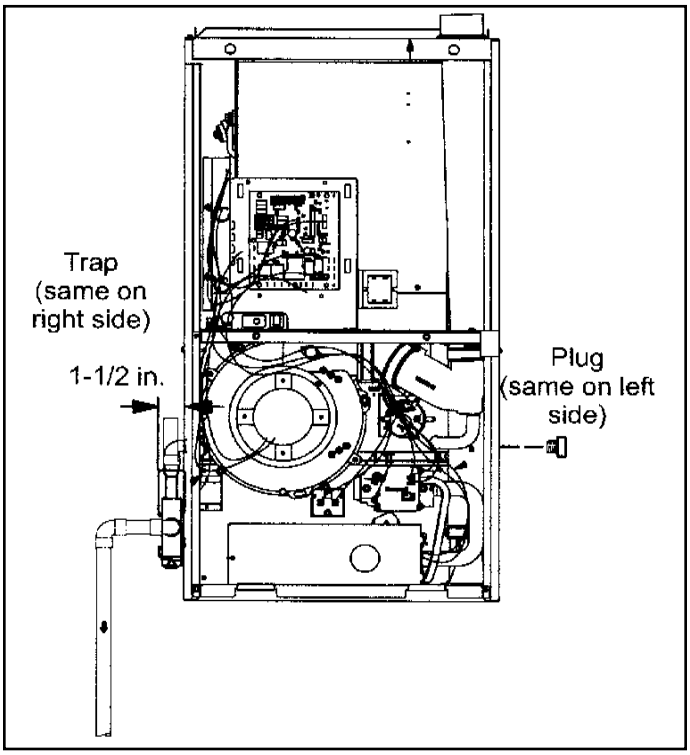

Figure 36. Condensate Trap and Plug Locations

4. Install drain trap using appropriate PVC fittings, glue all joints. Glue the provided drain trap as shown in Figure 38. Route the condensate line to an open drain.
5. Figure 39 shows the furnace and evaporator coil using a separate drain. If necessary the condensate line from the furnace and evaporator coil can drain together. See Figure 40. The field provided vent must be minimum 1" to a maximum 2" length above the condensate drain outlet connection.
6. If unit will be started immediately upon completion of installation, prime trap per procedure outlined in Unit Start-Up section.

NOTE: *Vinyl tubing may be used for condensate drain. Tubing must be 1-1/4" OD X 1" ID and should be attached to the drain on the trap using a hose clamp.*

Condensate line must slope downward away from the trap to drain. If drain level is above condensate trap, condensate pump must be used. Condensate drain line should be routed within the conditioned space to avoid freezing of condensate and blockage of drain line. If this is not possible, a heat cable kit may be used on the condensate trap and line. Heat cable kit is available in various lengths: 6 ft. (1.8 m) - Kit No. 26K68; 24 ft. (7.3 m) - Kit No. 26K69; and 50 ft. (15.2 m) - Kit No. 26K70.

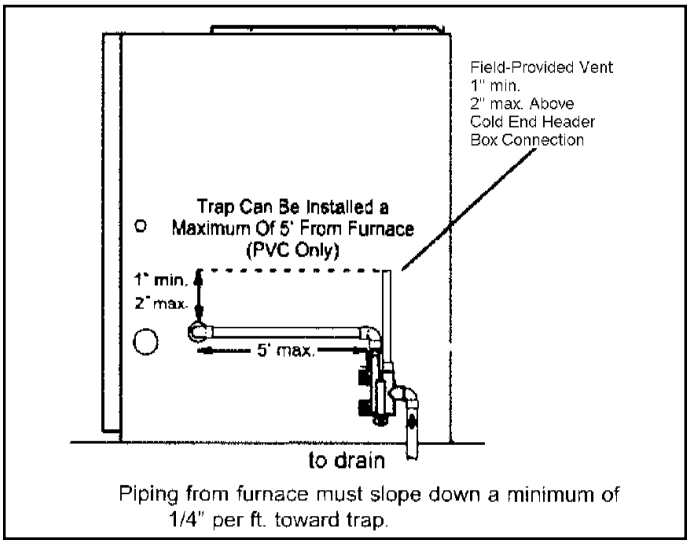

Figure 37. Condensate Trap Locations (Unit shown with right side exit of condensation)

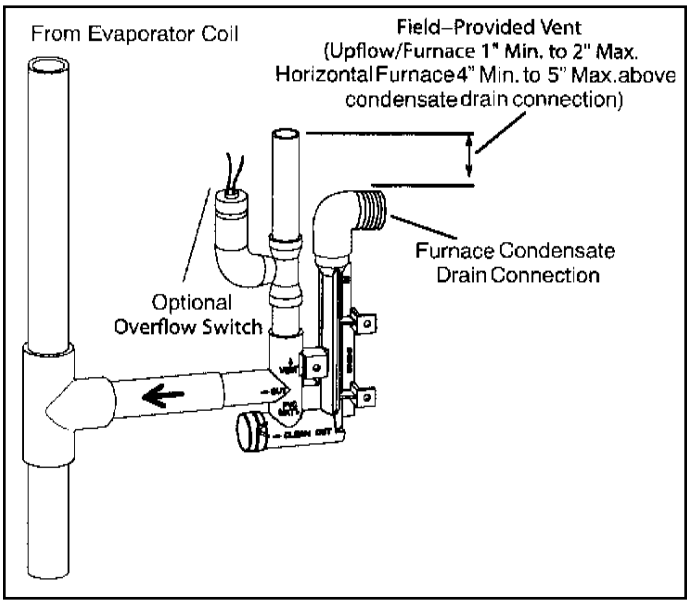

Figure 38. Condensate Trap with Optional Overflow Switch

⚠ IMPORTANT

When combining the furnace and evaporator coil drains together, the A/C condensate drain outlet must be vented to relieve pressure in order for the furnace pressure switch to operate properly.

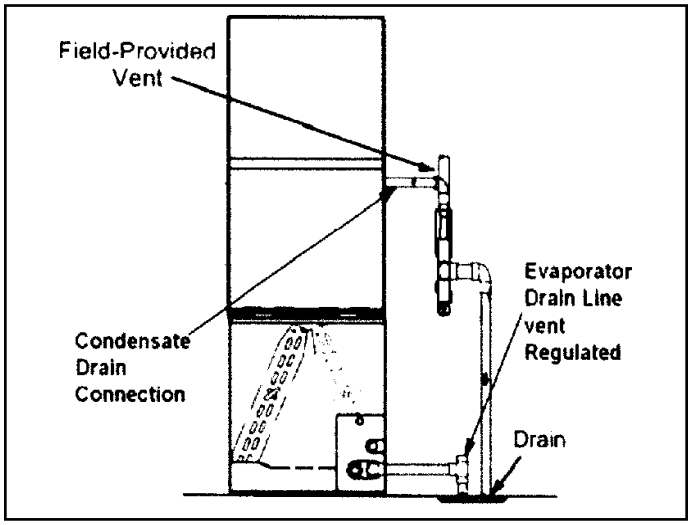

Figure 39. Evaporator Coil Using a Separate Drain

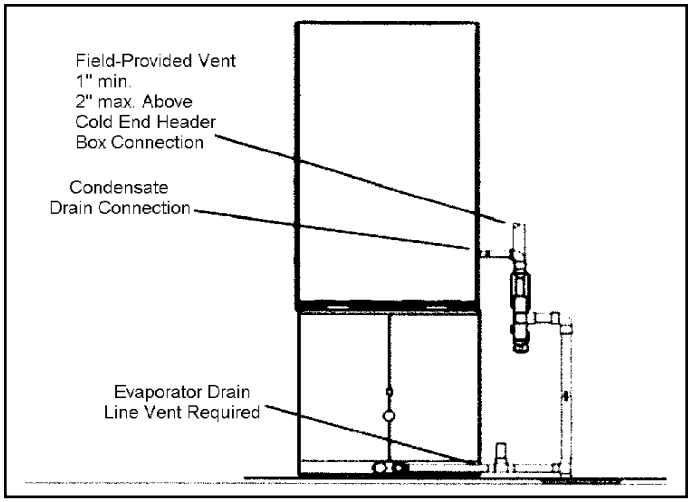

Figure 40. Evaporator Coil Using a Common Drain

⚠ CAUTION

Do not use copper tubing or existing copper condensate lines for drain line.

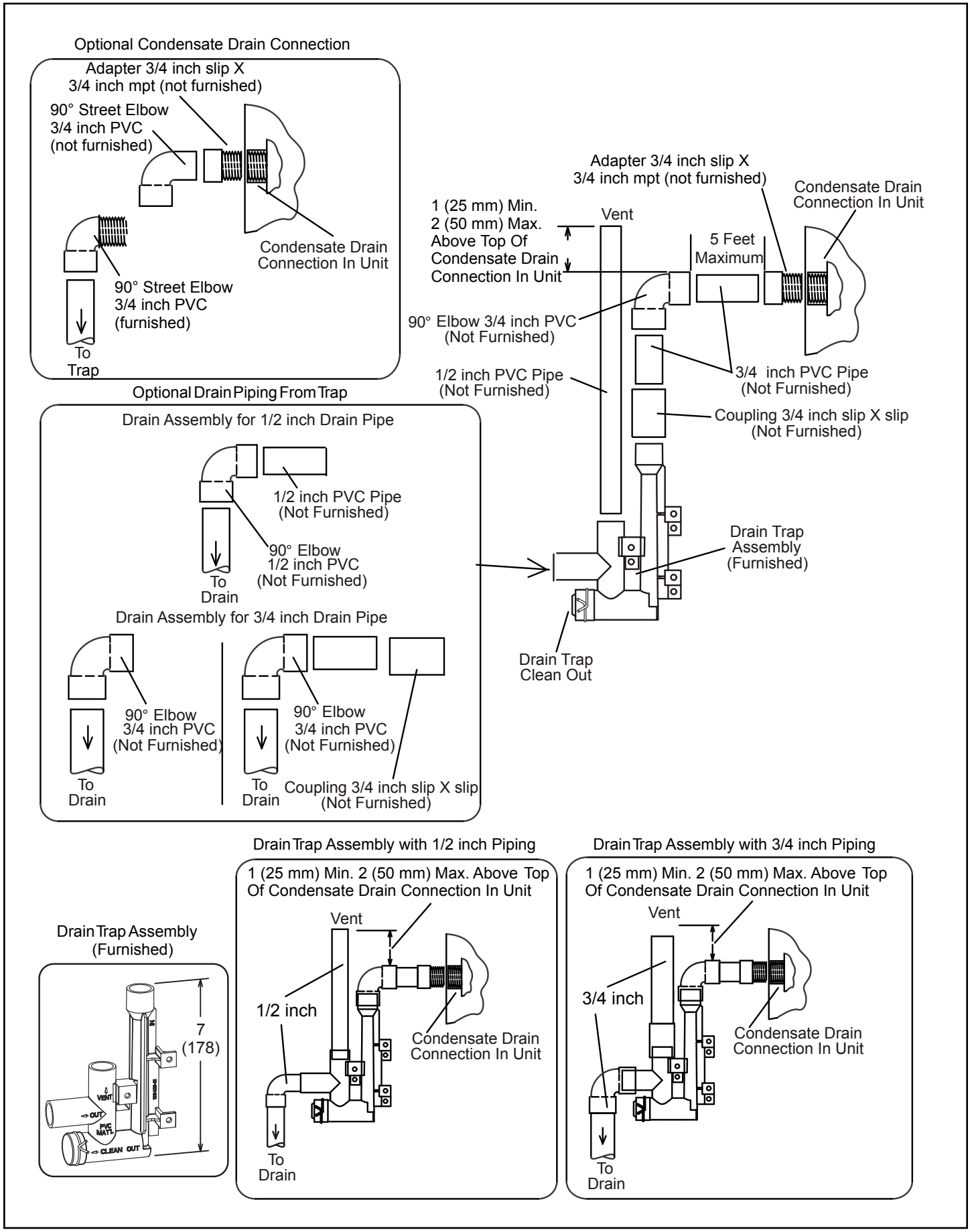

Figure 41. Trap / Drain Assembly Using 1/2” PVC or 3/4” PVC

Gas Piping

⚠ CAUTION

If a flexible gas connector is required or allowed by the authority that has jurisdiction, black iron pipe shall be installed at the gas valve and extend outside of the furnace cabinet.

⚠ WARNING

Do not exceed 600 in. lbs. (50 ft. lbs.) torque when attaching the gas piping to the gas valve.

1. Gas piping may be routed into the unit through either the left or right hand side. Supply piping enters into the gas valve from the side of the valve as shown in Figure 43.
2. When connecting gas supply, factors such as length of run, number of fittings and furnace rating must be considered to avoid excessive pressure drop. Table 10 lists recommended pipe sizes for typical applications.

   NOTE: *Use two wrenches when connecting gas piping to avoid transferring torque to the manifold.*
3. Gas piping must not run in or through air ducts, clothes chutes, chimneys or gas vents, dumb waiters or elevator shafts. Center gas line through piping hole. Gas line should not touch side of unit. See Figure 43.
4. Piping should be sloped 1/4 inch per 15 feet (6 mm per 5.6 m) upward toward the gas meter from the furnace. The piping must be supported at proper intervals, every 8 to 10 feet (2.44 to 3.05 m), using suitable hangers or straps. Install a drip leg in vertical pipe runs to serve as a trap for sediment or condensate.
5. A 1/8" NPT plugged tap or pressure post is located on the gas valve to facilitate test gauge connection. See Figure 42.
6. In some localities, codes may require installation of a manual main shut off valve and union (furnished by installer) external to the unit. Union must be of the ground joint type.

⚠ IMPORTANT

Compounds used on threaded joints of gas piping must be resistant to the actions of liquified petroleum gases.

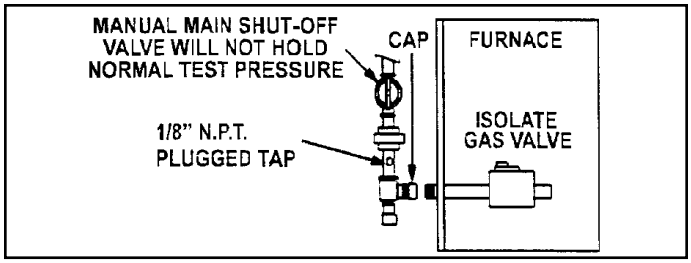

Figure 42.

Leak Check

After gas piping is completed, carefully check all piping connections (factory and field installed) for gas leaks. Use a leak detecting solution or other preferred means.

The furnace must be isolated from the gas supply system by closing its individual manual shut off valve during any pressure testing of the gas supply system at pressures less than or equal to 1/2 psig (3.48 kPa, 14 inches w.c.).

⚠ CAUTION

When testing gas lines using pressures in excess of 1/2 psig (3.48 kPa), gas valve must be disconnected and isolated. See Figure 42. Gas valves can be damaged if subjected to pressures greater than 1/2 psig (3.48 kPa).

⚠ WARNING

FIRE OR EXPLOSION HAZARD

Failure to follow the safety warnings exactly could result in serious injury, death, or property damage. Never use an open flame to test for gas leaks. Check all connections using a commercially available soap solution made specifically for leak detection. Some soaps used for leak detection are corrosive to certain metals. Carefully rinse piping thoroughly after leak test has been completed.

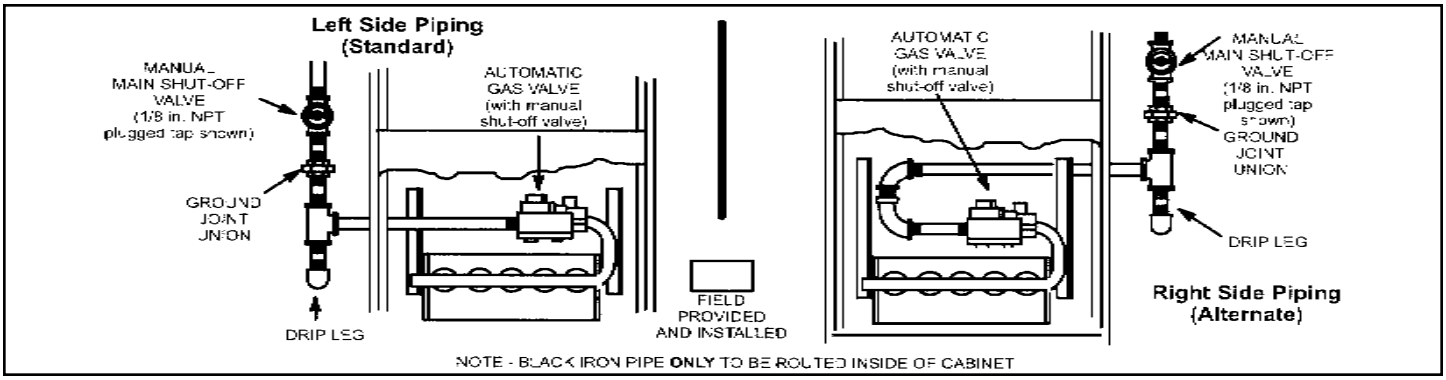

Figure 43.

Gas Pipe Capacity - FT³/HR (kL/HR)

Nominal Iron Pipe Size - inches (mm)	Internal Diameter - inches (mm)	Length or Pipe - feet (m)									
		10 (3.048)	20 (6.096)	30 (9.144)	40 (12.192)	50 (15.240)	60 (18.288)	70 (21.336)	80 (24.384)	90 (27.432)	100 (30.480)
1/2 (12.7)	.622 (17.799)	175 (4.96)	120 (3.40)	97 (2.75)	82 (2.32)	73 (2.07)	66 (1.87)	61 (1.73)	57 (1.61)	53 (1.50)	50 (1.42)
3/4 (19.05)	.824 (20.930)	360 (10.19)	250 (7.08)	200 (5.66)	170 (4.81)	151 (4.28)	138 (3.91)	125 (3.54)	118 (3.34)	110 (3.11)	103 (2.92)
1 (25.4)	1.049 (26.645)	680 (19.25)	465 (13.17)	375 (10.62)	320 (9.06)	285 (8.07)	260 (7.36)	240 (6.80)	220 (6.23)	205 (5.80)	195 (5.52)
1-1/4 (31.75)	1.380 (35.052)	1400 (39.64)	950 (26.90)	770 (21.80)	660 (18.69)	580 (16.42)	530 (15.01)	490 (13.87)	460 (13.03)	430 (12.18)	400 (11.33)
1-1/2 (38.1)	1.610 (40.894)	2100 (59.46)	460 (41.34)	1180 (33.41)	990 (28.03)	900 (25.48)	810 (22.94)	750 (21.24)	690 (19.54)	650 (18.41)	620 (17.56)
2 (50.8)	2.067 (52.502)	3950 (111.85)	2750 (77.87)	2200 (62.30)	1900 (53.80)	1680 (47.57)	1520 (43.04)	1400 (39.64)	1300 (36.81)	1220 (34.55)	1150 (32.56)
2-1/2 (63.5)	2.469 (67.713)	6300 (178.39)	4350 (123.17)	3520 (99.67)	3000 (84.95)	2650 (75.04)	2400 (67.96)	2250 (63.71)	2050 (58.05)	1950 (55.22)	1850 (52.38)
3 (76.2)	3.068 (77.927)	11000 (311.48)	7700 (218.03)	6250 (176.98)	5300 (150.07)	4750 (134.50)	4300 (121.76)	3900 (110.43)	3700 (104.77)	3450 (97.69)	3250 (92.03)
4 (101.6)	4.026 (102.260)	23000 (651.27)	15800 (447.39)	12800 (362.44)	10900 (308.64)	9700 (274.67)	9700 (274.67)	8100 (229.36)	7500 (212.37)	7200 (203.88)	6700 (189.72)

NOTE: *Capacity given in cubic feet of gas per hour (kilo liters of gas per hour) and based on 0.60 specific gravity gas.*

Table 10.

Removal of the Furnace from Common Vent

In the event that an existing furnace is removed from a venting system commonly run with separate gas appliances, the venting system is likely to properly vent the remaining attached appliances.

Conduct the following test while each appliance is operating and the other appliances (which are not operating) remain connected to the common venting system. If the venting system has been installed improperly, you must correct the system as indicated in the general venting requirements section.

The following steps shall be followed for each appliance connected to the venting system being placed into operation, while all other appliances connected to the venting system are not in operation:

1. Seal any unused openings in the common venting system.
2. Inspect the venting system for proper size and horizontal pitch. Determine that there is no blockage, restriction, leakage, corrosion, or other deficiencies which could cause and unsafe condition.
3. Close all building doors and windows and all doors between the space in which the appliances remaining connected to the common venting system are located and other spaces of the building. Turn on clothes dryers and any appliances not connected to the common venting system. Turn on any exhaust fans, such as range hoods and bathroom exhausts, so they will operate at maximum speed. Do not operate a summer exhaust fan. Close fireplace dampers.
4. Follow the lighting instructions. Turn on the appliance that is being inspected. Adjust the thermostat so that the appliance operates continuously.
5. After the main burner has operated for 5 minutes, test for leaks of flue gases at the draft hood relief opening. Use the flame of a match or candle.
6. After determining that each appliance connected to the common venting system is venting properly, (step 3) return all doors, windows, exhaust fans, fireplace dampers, and any other gas fuming appliances to their previous mode of operation.
7. If a venting problem is found during any of the preceding tests, the common venting system must be modified to correct the problem.

Resize the common venting system to the minimum vent pipe size determined by using the appropriated tables in Appendix G. (These are in the current standards of the National Fuel Gas Code ANSI Z223.1.)

Electrical

ELECTROSTATIC DISCHARGE (ESD)

Precautions and Procedures

⚠ CAUTION

Electrostatic discharge can affect electronic components. Take precautions during furnace installation and service to protect the furnace's electronic controls. Precautions will help to avoid control exposure to electrostatic discharge by putting the furnace, the control and the technician at the same electrostatic potential. Neutralize electrostatic charge by touching hand and all tools on an unpainted unit surface, such as the gas valve or blower deck, before performing any service procedure.

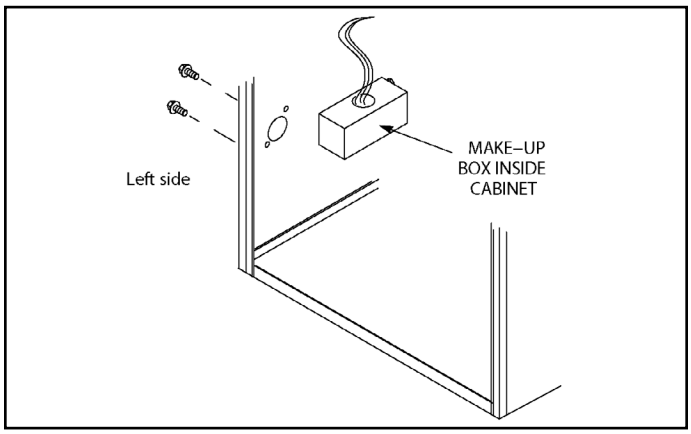

Figure 44. Interior Make-Up Box Installation

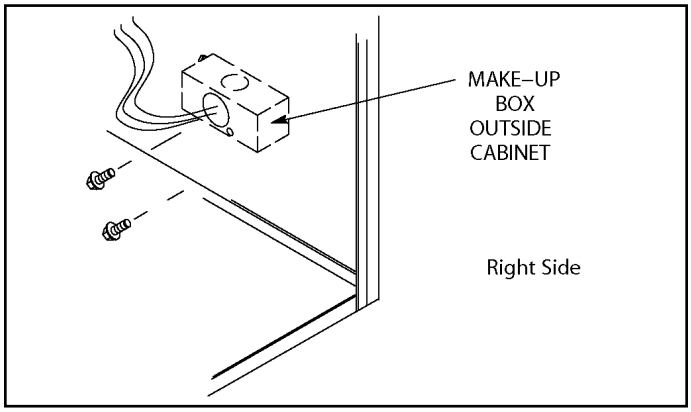

Figure 45. Interior Make-Up Box Installation

The unit is equipped with a field makeup box. The makeup box may be moved to the right side of the furnace to facilitate installation. If the make up box is moved to the right side, clip the wire ties that bundle the wires together. The excess wire must be pulled into the blower compartment. Secure the excess wire to the existing harness to protect it from damage. Seal unused openings on left side with plugs removed from right side.

Refer to Figure 46 for unit field wiring. See Figure 47 and Figure 48 for wiring of Comfort Sync™ thermostat in communicating applications. Table 14A through Table 21 show DIP switch and onboard link settings for non-communicating thermostat applications. Typical wiring schematic is shown in Figure 46.

1. The power supply wiring must meet Class I restrictions. Protected by either a fuse or circuit breaker, select circuit protection and wire size according to unit nameplate.

   NOTE: *Unit nameplate states maximum current draw. See table for maximum over-current protection.*

A97DSMV Model	Maximum Over Current Protection (Amps)
070B12, 090C12, 090C16	15
090C20, 110C20	20

Table 11.

2. Holes are on both sides of the furnace cabinet to facilitate wiring.
3. Install a separate (properly sized) disconnect switch near the furnace so that power can be turned off for servicing.
4. Before connecting the thermostat check to make sure the wires will be long enough for servicing at a later date. Make sure that the thermostat wire is long enough to facilitate future removal of blower for service.
5. Complete the wiring connections to the equipment. Use the provided unit wiring diagram and the field wiring diagram shown in Figure 46. Use 18 gauge wire or larger that is suitable for Class II rating for thermostat connections.
6. Electrically ground the unit according to local codes or, in the absence of local codes, according to the current National Electric Code (ANSI/HFPA No. 70) for the USA and current Canadian Electric Code Part 1 (CSA standard C22.1) for Canada. A green ground wire is provided in the field make up box.
7. One line voltage “ACC” 1/4” spade terminal is provided on the furnace integrated control. Any electronic air cleaner or other 120V accessory rated up to one amp can be connected to this terminal with the neutral leg of the circuit being connected to one of the provided neutral terminals. See Figure 49 for location of terminal. This terminal is energized when the indoor blower is operating.
8. One line voltage “HUM” 1/4” spade terminal is provided on the furnace integrated control. Any humidifier rated up to one amp can be connected to this terminal with the neutral leg of the circuit being connected to one of the provided neutral terminals. See Figure 49 for location of terminal. This terminal is energized in the heating mode when the indoor blower is operating.
9. One 24V “H” terminal is provided on the furnace integrated control terminal block. Any humidifier rated up to 0.5 amp can be connected to this terminal with the ground leg of the circuit being connected to either ground or the “C” terminal. See Figure 49 for location of terminal.
10. Install the room thermostat according to the instructions provided with the thermostat. See Table 14A through Table 14D for thermostat connections. If the furnace is being matched with a heat pump, refer to the instruction packaged with the dual fuel thermostat.

Wire Run Length	AWG#	Insulation / Core Types
Less than 100’ (30 m)	18	Color coded, temperature rating 95° F (35° C) minimum, solid core. (Class II Rated Wiring)
More than 100’ (30 m)	16	

Table 12. Run Length – Non Communicating

Wire Run Length	AWG#	Insulation / Core Types
Maximum length of wiring for all connections on the RSBus is limited to 1500 feet (457 meters).	18	Color coded, temperature rating 95° F (35° C) minimum, solid core. (Class II Rated Wiring)

Table 13. Run Length – Communicating

Thermostat Selection

The unit is designed to operate in a variable rate capacity mode using a two stage thermostat. This unit will automatically adjust firing rate based upon thermostat cycle times.

A Comfort Sync™ thermostat must be used in communicating applications. Refer to the instructions provided with the thermostat for installation, set up and operation.

For optimal performance in non-communicating applications, a thermostat with adjustable settings for 1st stage /2nd stage on/off differentials and adjustable stage timer is recommended.

The following two-stage thermostat setup is recommended for optimal variable rate capacity mode:

First heat stage differential set to 1/2 to 1 degree F; second heat stage differential set to 1/2 or 1 degree F; second heat stage upstage timer disabled, or set to maximum (1 hr minimum).

Indoor Blower Speeds

NOTE: *When this unit is used with a Comfort Sync™ thermostat, proper indoor blower speed selections are made by the communicating thermostat.*

1. When the thermostat is set to “FAN ON”, the indoor blower will run continuously at 38% percent of the second stage cooling speed when there is no cooling or heating demand. See Table 23 for allowable continuous circulation speeds.
2. When the unit is running in the heating mode, the integrated control will automatically adjust the blower speed to match the furnace firing rate. This speed can be adjusted up or down by 7.5% or 15% using DIP switches 14 through 16 for the low heat speed and 17 through 19 for the high heat speed. See Table 22 for allowable heating speeds.
3. When there is a cooling demand, the indoor blower will run on the cooling speed designated by the positions of DIP switches 8 through 11.

NOTE: *The discharge air temperature sensor is intended to be mounted downstream of the heat exchanger and air conditioning coil. It must be placed in free airflow, where other accessories (humidifiers, UV lights etc.) will not interfere with its accuracy. Wiring distance between the furnace and discharge air sensor should not exceed 10 ft. when wired with 18 gauge thermostat wire.*

Generator Use - Voltage Requirements

The following requirements must be kept in mind when specifying a generator for use with this equipment:

- The furnace requires 120 volts ± 10% (Range: 108 volts to 132 volts).
- The furnace operates at 60 Hz ± 5% (Range: 57 Hz to 63 Hz).
- The furnace integrated control requires both polarity and proper ground. Both polarity and proper grounding should be checked before attempting to operate the furnace on either permanent or temporary power.
- Generator should have a wave form distortion of less than 5% THD (Total Harmonic Distortion).

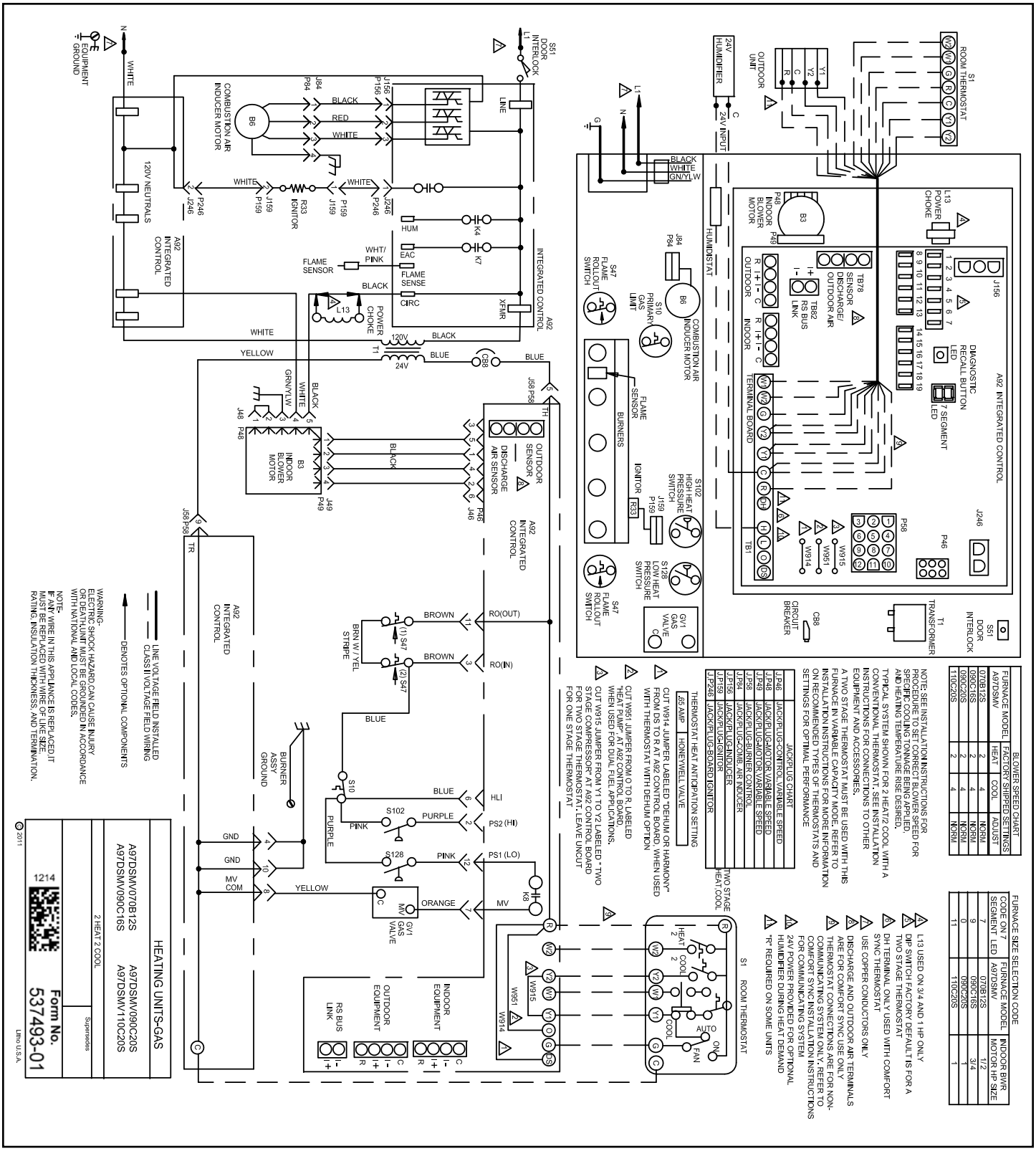

Figure 46. Typical A97DSMV Field Wiring Diagram for Standard Non-Communicating Thermostat

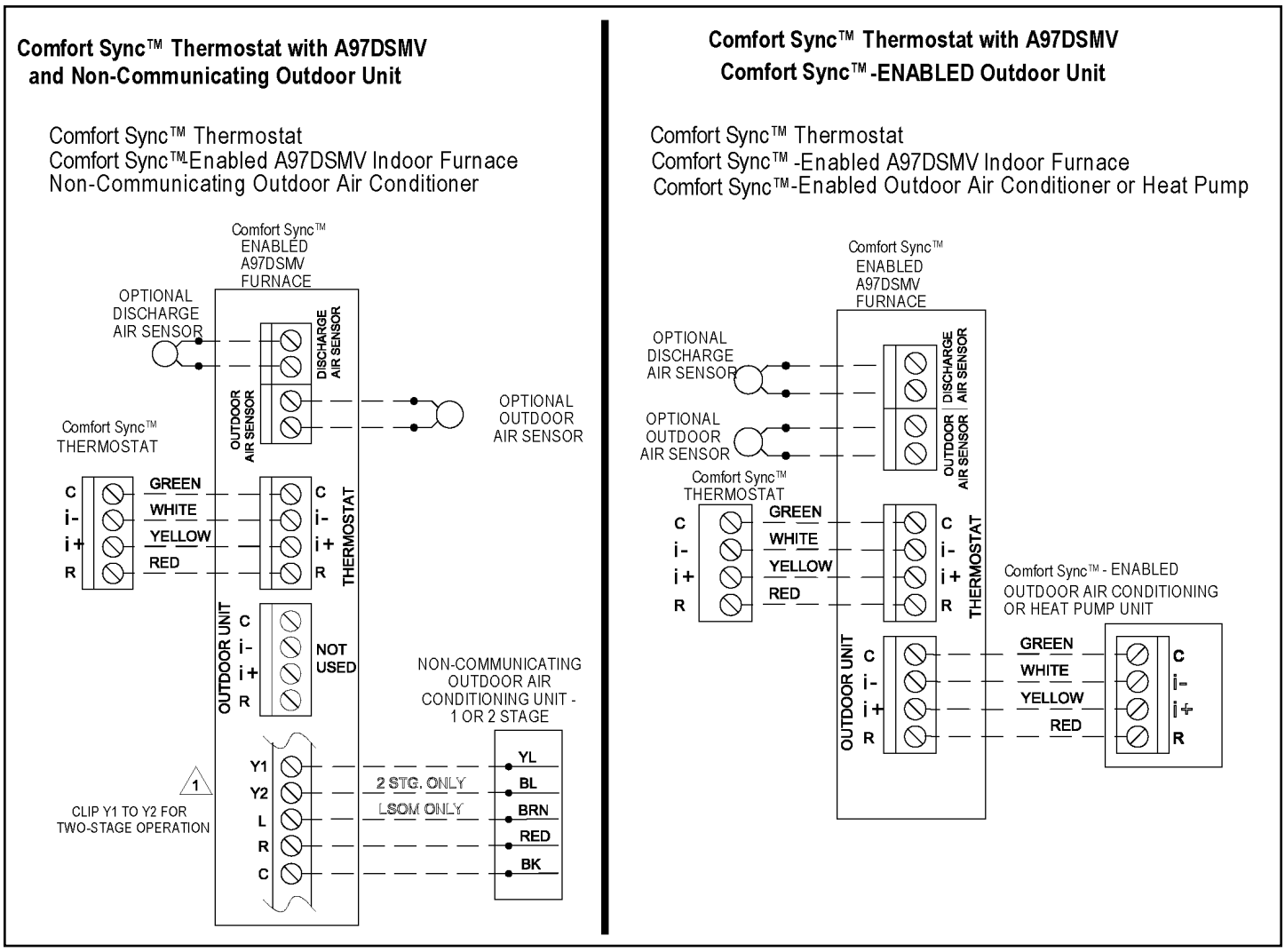
Comfort Sync™ Thermostat with A97DSMV
and Non-Communicating Outdoor Unit
Comfort Sync™ Thermostat
Comfort Sync™-Enabled A97DSMV Indoor Furnace
Non-Communicating Outdoor Air Conditioner
Comfort Sync™ ENABLED A97DSMV FURNACE
OPTIONAL DISCHARGE AIR SENSOR
DISCHARGE AIR SENSOR
OUTDOOR AIR SENSOR
OPTIONAL OUTDOOR AIR SENSOR
Comfort Sync™ THERMOSTAT
C
i-
i+
R
GREEN
WHITE
YELLOW
RED
THERMOSTAT
OUTDOOR UNIT
NOT USED
NON-COMMUNICATING OUTDOOR AIR CONDITIONING UNIT - 1 OR 2 STAGE
Y1
Y2
L
2 STG. ONLY
LSOM ONLY
YL
BL
BRN
RED
BK
1
CLIP Y1 TO Y2 FOR TWO-STAGE OPERATION
Comfort Sync™ Thermostat with A97DSMV
Comfort Sync™-ENABLED Outdoor Unit
Comfort Sync™ Thermostat
Comfort Sync™ -Enabled A97DSMV Indoor Furnace
Comfort Sync™-Enabled Outdoor Air Conditioner or Heat Pump
Comfort Sync™ ENABLED A97DSMV FURNACE
OPTIONAL DISCHARGE AIR SENSOR
OPTIONAL OUTDOOR AIR SENSOR
DISCHARGE AIR SENSOR
OUTDOOR AIR SENSOR
Comfort Sync™ THERMOSTAT
C
i-
i+
R
GREEN
WHITE
YELLOW
RED
THERMOSTAT
OUTDOOR UNIT
Comfort Sync™ - ENABLED OUTDOOR AIR CONDITIONING OR HEAT PUMP UNIT

Figure 47.

Optional Accessories for use with any Comfort Sync™ System

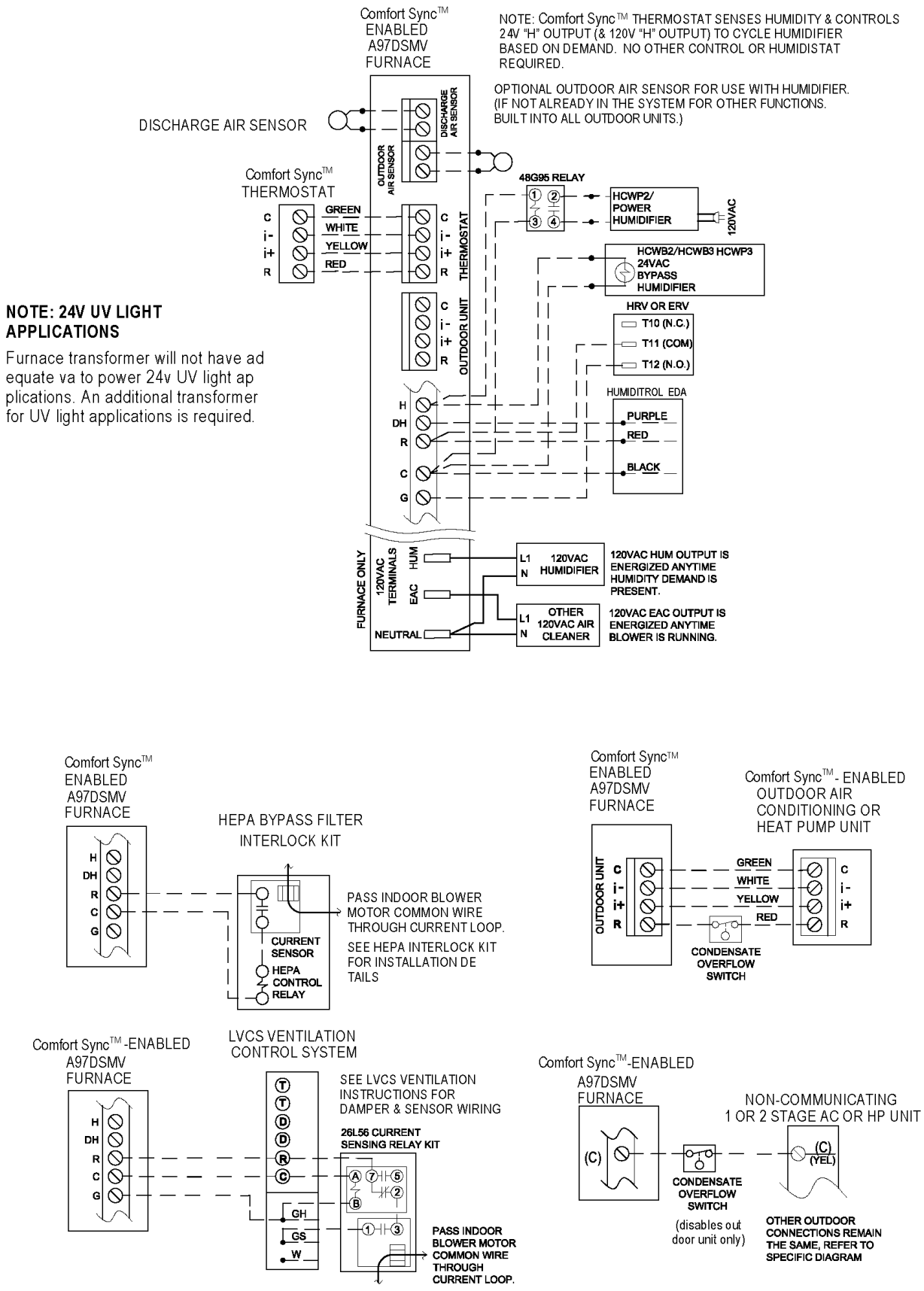

Figure 48.

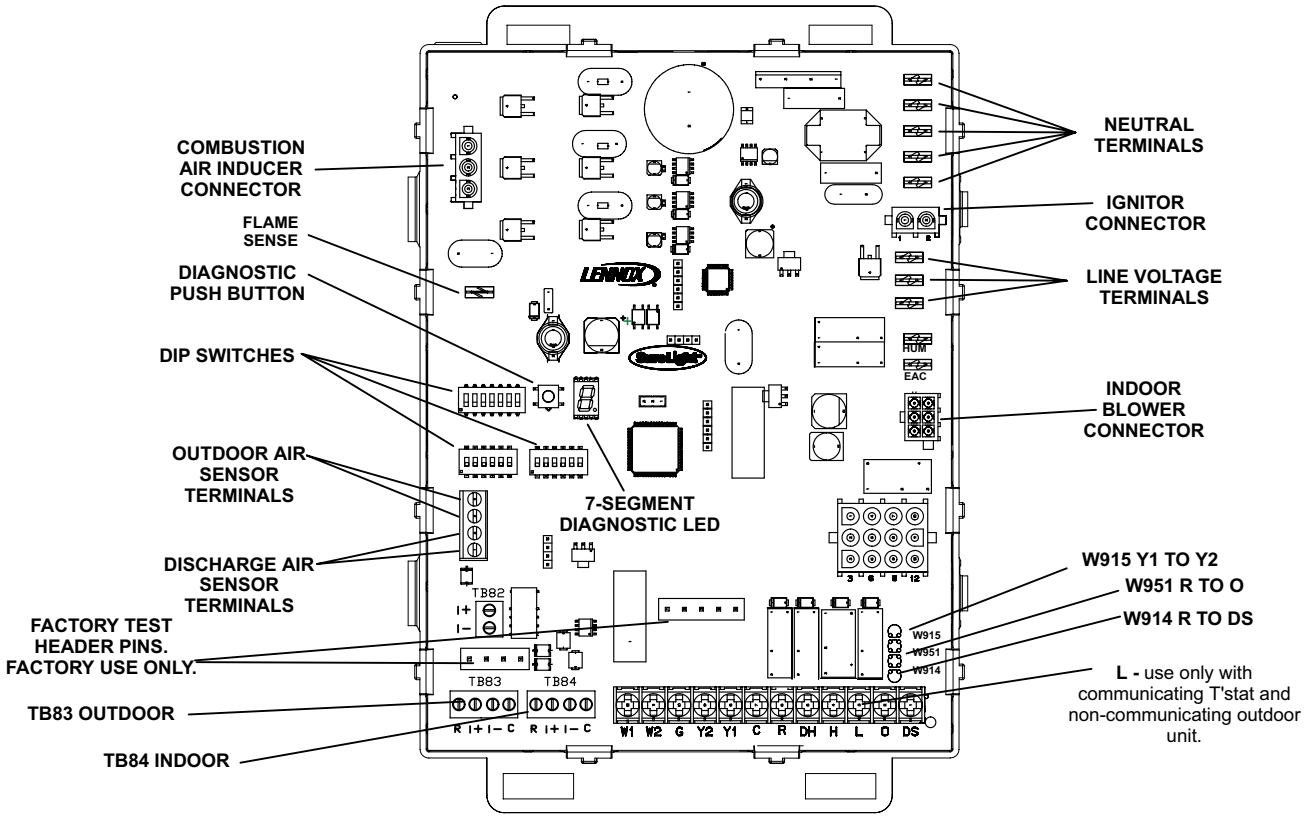

RS-BUS LINK (TB82, future use)

I+ = DATA HIGH CONNECTION
I - = DATA LOW CONNECTION

RS-BUS OUTDOOR (TB83)

R = 24VAC
I + = DATA HIGH CONNECTION
I - = DATA LOW CONNECTION
C = 24VAXC COMMON

RS-BUS INDOOR (TB84)

R = 24VAC
I + = DATA HIGH CONNECTION
I - = DATA LOW CONNECTION
C = 24VAXC COMMON

1/4” QUICK CONNECT TERMINALS

HUM = 120 VAC OUTPUT TO HUMIDIFIER
XMFR = 120 VAC OUTPUT TO TRANSFORMER
LI = 120 VAC INPUT TO CONTROL
CIRC = 120 VAC OUTPUT TO CIRCULATING BLOWER
EAC = 120 VAC OUTPUT TO ELECTRICAL AIR CLEANER
NEUTRALS = 120 VAC NEUTRAL

THERMOSTAT CONNECTIONS (TB1)

DS = DEHUMIDIFICATION SIGNAL
W2 = HEAT DEMAND FROM 2ND STAGE T/STAT
W1 = HEAT DEMAND FROM 1ST STAGE T/STAT
R = CLASS 2 VOLTAGE TO THERMOSTAT
G = MANUAL FAN FROM THERMOSTAT
C = THERMOSTAT SIGNAL GROUNCONNECTED TO TRANSFORMER GRD (TR) & CHASIS GROUND (GRD)
Y1 = THERMOSTAT 1ST STAGE COOL SIGNAL
Y2 = THERMOSTAT 2ND STAGE COOL SIGNAL
O = THERMOSTAT SIGNAL TO HEAT PUMP REVERSING VALVE
H = 24V HUMIDIFIER OUTPUT. DO NOT CONNECT TO COMFORTSENSE® THERMOSTAT
L = USE ONLY WITH A COMMUNICATING THERMOSTAT AND A NON-COMMUNICATING OUTDOOR UNIT
DH = DEHUMIDIFICATION OUTPUT COMMUNICATING THERMOSTAT ONLY

Figure 49. Integrated Control

Thermostat	DIP Switch Settings and On-Board Links (figure NO TAG)				Wiring Connections
	DIP Switch 1	W915 (Y1 to Y2) Two-Stage Cooling	W914 (DS to R) Dehumidification or Harmony III™	W951 (O to R) Heat Pumps	
1Heat / 1 Cool *NOTE - Use DIP switch 3 to set second-stage heat ON delay. OFF-7 minutes. ON-12 minutes.*	ON	Intact	Intact	Intact	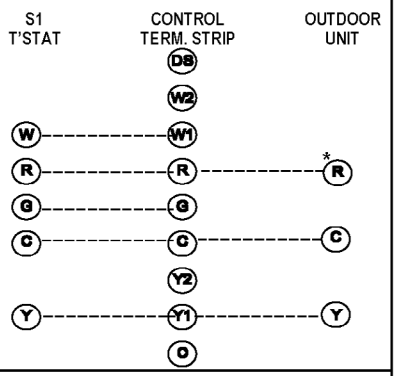
1 Heat / 2 Cool *NOTE - Use DIP switch 3 to set second-stage heat ON delay. OFF-7 minutes. ON-12 minutes.*	ON	Cut	Intact	Intact	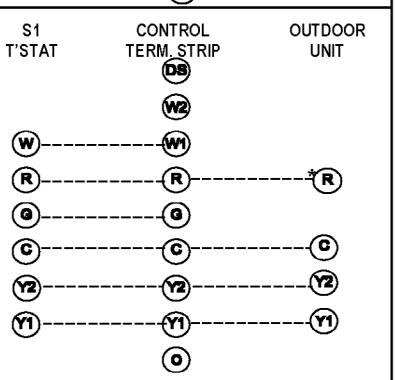
1 Heat / 2 Cool with t'stat with dehumidification mode *NOTE - Use DIP switch 3 to set second-stage heat ON delay. OFF-7 minutes. ON-12 minutes.*	ON	Cut	Cut	Intact	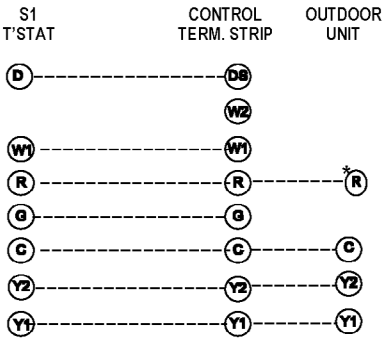

*"R" required on some units.

Table 14A. Field Wiring Connections for Non-Communicating Thermostat Applications

Thermostat	DIP Switch Settings and On-Board Links (figure NO TAG)				Wiring Connections
	DIP Switch 1	W915 (Y1 to Y2) Two-Stage Cooling	W914 (DS to R) Dehumidification or Harmony III™	W951 (O to R) Heat Pumps	
2 Heat / 2 Cool	OFF	Cut	Intact	Intact	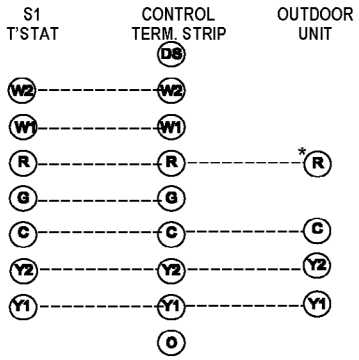
2 Heat / 2 Cool with t'stat with dehumidification mode	OFF	Cut	Cut	Intact	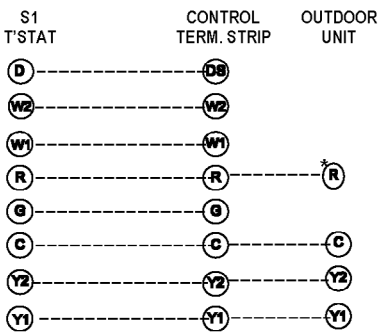
2 Heat / 1 Cool	OFF	Intact	Intact	Intact	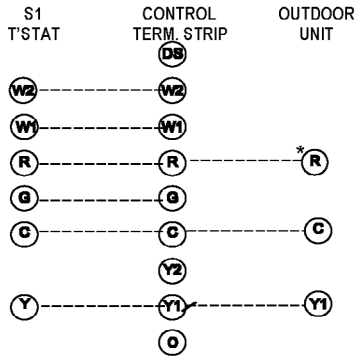

*"R" required on some units.

Table 14B. Field Wiring for Non-Communicating Applications (continued)

Thermostat	DIP Switch Settings and On-Board Links (figure NO TAG)				Wiring Connections
	DIP Switch	W915 (Y1 to Y2) Two-Stage Cooling	W914 (DS to R) Dehumidification or Harmony III™	W951 (O to R) Heat Pumps	
Dual Fuel Single-Stage Heat Pump thermostat w/ dual fuel capabilities Capable of 2-stage gas heat control	DIP Switch 1 OFF	Intact	Intact	Cut	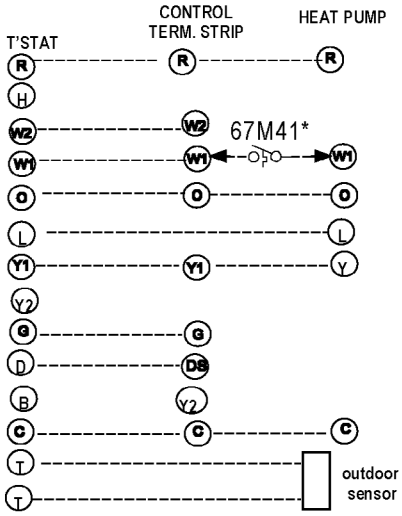
Dual Fuel Two Stage Heat Pump thermostat w/ dual fuel capabilities Capable of 2-stage gas heat control	DIP Switch 1 OFF	Cut	Intact	Cut	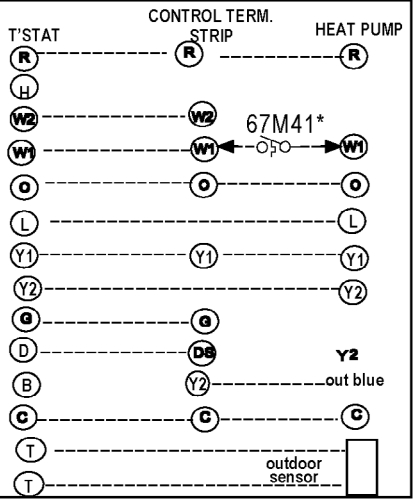

* Connect W1 to W1 ONLY if using defrost tempering kit 67M41.

NOTE: *Do NOT make a wire connection between the room thermostat L terminal and the L terminal of the A97DSMV integrated control.*

Table 14C. Field Wiring for Non-Communicating Applications (continued)

Field Wiring Connections for Non-Communicating Thermostat Applications with Fossil Fuel Kit

Single Stage

Thermostat	DIP Switch Settings & On Board Links			
	DIP Switch	W915 (Y1 to Y2) Two Stage Cooling	W914 (DS to R) Dehumidi-fication	W951 (O to R) Heat Pumps
Dual Fuel Single Stage Heat Pump Thermostat w/dual fuel capabilities Capable of 2 stage gas heat control	DIP Switch 1 OFF	Intact	Intact	Cut

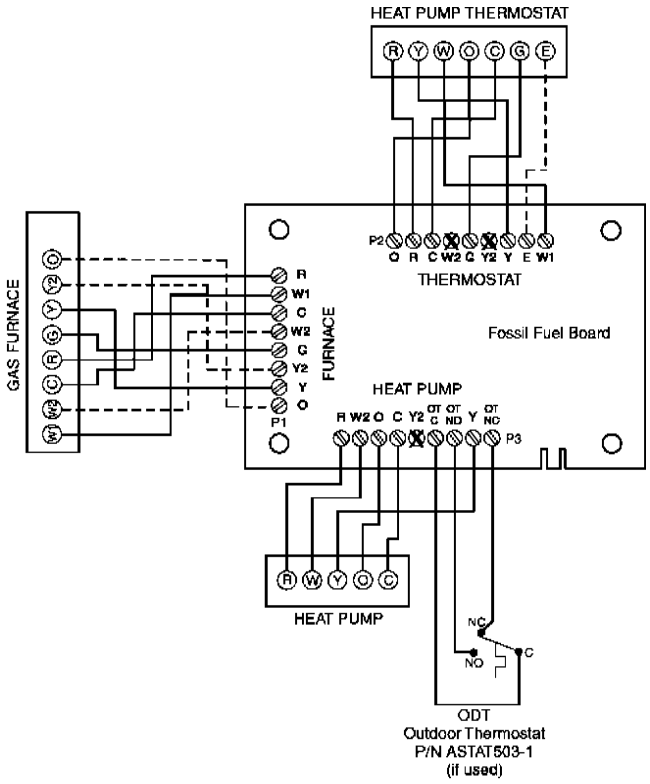

2 Stage

Thermostat	DIP Switch Settings & On Board Links			
	DIP Switch	W915 (Y1 to Y2) Two Stage Cooling	W914 (DS to R) Dehumidi-fication	W951 (O to R) Heat Pumps
Dual Fuel Two Stage Heat Pump Thermostat w/dual fuel capabilities Capable of 2 stage gas heat control	DIP Switch 1 OFF	Intact	Intact	Cut

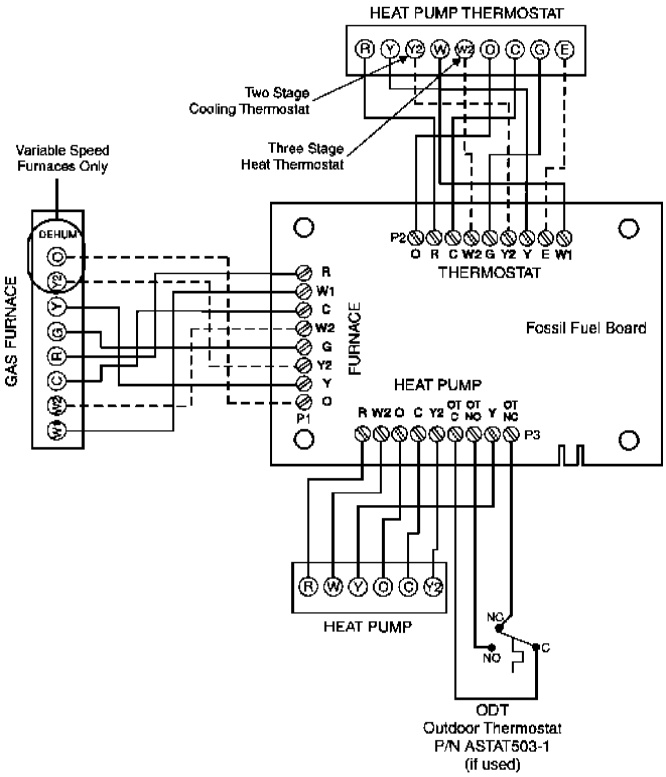

Table 14D. Low Voltage Field Wiring

Operation	Thermostat	Switch 1	Switch 2	Switch 3
Variable Capacity Heat (40% to 100%)	Two Stage	Off	On	Off
Three Stage Heat (40%, 70%, 10%)	Single Stage	On	Off	2nd stage delay OFF = 7 minutes ON = 12 minutes 3rd stage delay 10 minutes fixed
Two Stage Heat (W1 70%, W2 100%)	Single Stage	Off	Off	Off

Table 15.

These units are equipped with an integrated control. This control manages ignition timing, combustion air inducer speed, heating mode fan OFF delays and indoor blower speeds based on selections made using the control DIP switches and onboard links. The control includes an internal feature which automatically resets the ignition control when it has been locked out.

NOTE: *All DIP switches are factory shipped in the "OFF" position.*

Heating Operation DIP Switch Settings

See Figure 49

Switch 1 - Thermostat Selection - This unit may be used with either a single stage or two stage thermostat. The thermostat selection is made using a DIP switch which must be properly positioned for the particular application. The DIP switch is factory positioned for use with a two stage thermostat. If a single stage thermostat is to be used, the DIP switch must be repositioned. See Table 15.

Switch 2 - Operating Mode with Two Stage Thermostat - If a two stage thermostat is used, the furnace can operate in either variable capacity or conventional two stage mode. When variable capacity mode is selected, the firing rate of the unit is varied to maximize comfort. Conventional two stage mode is the factory default setting. See Table 15.

Switch 3 - Second Stage Heat On Delay - If a single stage thermostat is used, the integrated control can be used to energize second stage heat after either 7 minutes or 12 minutes of first stage heat operation. See Table 15.

Switches 4 and 5 - Blower Off Delay -The blower On delay of 30 seconds is not adjustable. The blower Off delay (time that the blower operates after the heating demand has been satisfied) can be adjusted by moving switches 4 and 5 on the integrated control. The unit is shipped from the factory with a blower Off delay of 90 seconds. The blower Off delay affects comfort and is adjustable to satisfy individual applications. Adjust the blower Off delay to achieve a supply air temperature between 90° and 110° F at the exact moment that the blower is de-energized. Longer Off delay settings provide lower supply air temperatures; shorter settings provide higher supply air temperatures. Table 16 provides the blower Off timings that will result from different switch settings.

Blower Off Delay (Seconds)	Switch 4	Switch 5
60	Off	On
90 (factory)	Off	Off
120	On	Off
180	On	On

Table 16. Blower Off Delay Switch Settings

Indoor Blower Operation DIP Switch Settings

Switches 6 and 7 - Continuous Indoor Fan Operation - Blower Speed - The unit is shipped from the factory with the DIP switches positioned for medium low (38%) speed during continuous indoor blower operation. Continuous fan setting is 38% of cool setting and is not adjustable.

Switches 8 and 9 - Cooling Mode Blower Speed- The unit is shipped from the factory with the DIP switches positioned for high speed (4) indoor blower motor operation during the cooling mode. The table below provides the cooling mode blower speeds that will result from different switch settings.

Speed	Switch 8	Switch 9
1 - Low	On	On
2 - Medium Low	Off	On
3 - Medium High	On	Off
4 - High (Factory)	Off	Off

Table 17. Cooling Mode Blower Speeds

Switches 10 and 11 - Cooling Mode Blower Speed Adjustment - The unit is shipped from the factory with the DIP switches positioned for NORMAL (no) adjustment. The DIP switches may be positioned to adjust the blower speed by +10% or -10% to better suit the application. Table 18 provides blower speed adjustments that will result from different switch settings. Refer to air flow tables for values.

With switches 10 and 11 set to ON, motor will bypass ramping profiles and all delays and will immediately run at selected COOLING speed upon a call for cool. LED will continue to operate as normal. This mode is used to check motor operation.

Adjustment	Switch 10	Switch 11
+ 10%	On	Off
NORMAL (Factory)	Off	Off
- 10% (approx.)	Off	On
MOTOR TEST	On	On

Table 18. Cooling Mode Blower Speed Adjustment

Switches 12 and 13 - Cooling Mode Blower Speed Ramping - Blower speed ramping may be used to enhance dehumidification performance. The switches are factory set at option A which has the greatest effect on blower motor performance. Table 19 provides the cooling mode blower speed ramping options that will result from different switch settings. The cooling mode blower speed ramping options are detailed below.

NOTE: *The OFF portion of the selected ramp profile only applies during heat pump operation in dual fuel applications.*

Ramping Option	Switch 12	Switch 13
A (Factory)	Off	Off
B	On	Off
C	Off	On
D	On	On

Table 19. Cooling Mode Blower Speed Ramping

Ramping Option "A" (Factory Selection)

- Motor runs at 50% for 30 seconds.
- Motor then runs at 82% for approximately 7-1/2 minutes.
- If demand has not been satisfied after 7-1/2 minutes, motor runs at 100% until demand is satisfied.
- Once demand is met, motor runs at 50% for 30 seconds then ramps down to stop.

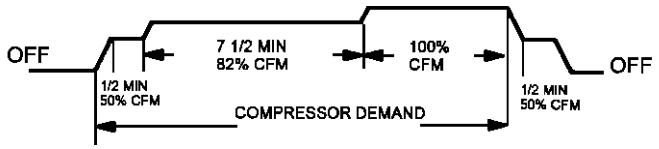

Ramping Option "B"

- Motor runs at 82% for approximately 7-1/2 minutes. If demand has not been satisfied after 7-1/2 minutes, motor runs at 100% until demand is satisfied.
- Once demand is met, motor ramps down to stop.

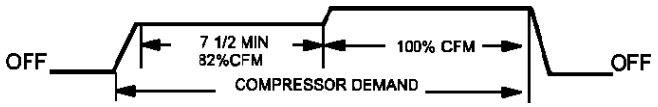

Ramping Option "C"

- Motor runs at 100% until demand is satisfied.
- Once demand is met, motor runs at 100% for 45 seconds then ramps down to stop.

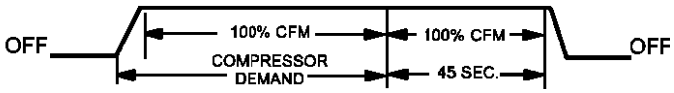

Ramping Option "D"

- Motor runs at 100% until demand is satisfied.
- Once demand is met, motor ramps down to stop.

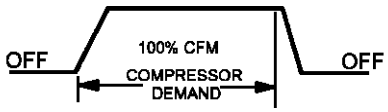

Switches 14 through 19 - Heating Mode Blower Speed - These switches are factory set at the OFF position which provides 100% of normal speed during HIGH HEAT demand, 70% of normal speed during MIDRANGE HEAT demand and 40% of normal speed during LOW HEAT demand. Switches 14, 15 and 16 are used to adjust the LOW HEAT blower motor speed. Switches 17, 18 and 19 are used to adjust the HIGH HEAT blower motor speed. Table 20 and Table 21 provide the heating mode blower speeds that will result from different switch settings. See Table 22 for allowable heating speeds.

Thermostat Demand	Blower Speed Adjustments	DIP Switch Settings		
		14	15	16
Low Heat (R to W1)	+15%	On	Off	On
	+7.5%	On	Off	Off
	Normal	Off	Off	Off
	-7.5%	On	On	Off
	-15%	On	On	On

Table 20. Low Heat Blower Speeds

Thermostat Demand	Blower Speed Adjustments	DIP Switch Settings		
		17	18	19
High Heat (R to W1 & W2)	+15%	On	Off	On
	+7.5%	On	Off	Off
	Normal	Off	Off	Off
	-7.5%	On	On	Off
	-15%	On	On	On

Table 21. High Heat Blower Speeds

On Board Links

On Board links must be clipped (when applicable) before unit is placed into operation with a non-communicating thermostat.

On Board Link W914 DS to R

On Board link W914, is a clippable connection between terminals DS and R on the integrated control. W914 must be cut when installed with a thermostat which features humidity control. Refer to Table 24 for operation sequence in applications for this unit, a thermostat which features humidity control and a single speed outdoor unit. Table 25 gives the operation sequence in applications with a two speed outdoor unit.

On Board Link W951 R to O

On Board link W951 is a clippable connection between terminals R and O on the integrated control. W951 must be cut when the furnace is installed in applications which include a heat pump unit and thermostat which features dual fuel use. If the link is left intact, terminal “O” will remain energized eliminating the HEAT MODE in the heat pump.

On Board Link W915 Y1 to Y2

On Board link W915 si a clippable connection between terminals Y1 and Y2 on the integrated control. W915 must be cut if two stage cooling will be used. If the link is not cut the outdoor unit will operate in second stage cooling only.

Diagnostic LED

The seven segment diagnostic LED displays operating status, target airflow, error codes and other information. The table on Page 56 lists diagnostic LED codes.

Diagnostic Push Button

The diagnostic push button is located adjacent to the seven segment diagnostic LED. This button is used to enable the Error Code Recall mode and the Field Test mode. Press the button and hold it to cycle through a menu of options. Every five seconds a new menu item will be displayed. When the button is released, the displayed item will be selected. Once all items in the menu have been displayed, the menu resumes from the beginning until the button is released.

Error Code Recall Mode

Select “E: from the menu to access the most recent 10 error codes. Select “c” from the Error Code Recall menu to clear all error codes. Button must be pressed a second time while “c” is flashing to confirm command to delete codes. Press the button until a solid “-” is displayed to exit the Error Code Recall mode.

Field Test Mode

Use the diagnostic push button to scroll through the menu as described above. Release the button when the LED flashes “-” to select the Field Test mode.

While in the Field Test mode, the technician can:

- Initiate furnace ignition and move to and hold low-fire rate by applying a R to W1 jumper.
- Initiate furnace ignition sequence and move to an hold high-fire rate by applying a jumper from R to W1 and W2.
- Initiate furnace ignition sequence and move to and hold mid-fire rate by applying a jumper to R and W2.
- Apply then remove the jumper from R to W1 and W2 to change the firing rate from low fire to mid fire and high fire.
- A vent calibration sequence can be initiated even if a thermostat signal is not present. Press and hold the push button until a solid “C” is displayed. Release the button and calibration will begin. The furnace will perform the high-fire and low-fire pressure switch calibrations and display “CAL”. After calibration , the LED will return to the flashing “-” display.

During Field Test mode operation, all safety switches are still in the circuit (they are not by-passed) and indoor blower performance and timings will match DIP switch selections. Current furnace firing rate, indoor blower CFM and flame signal will be displayed. To exit the Field Test mode, press and hold the button. The menu will resume from the beginning. Also, cycle the main power to exit the Field Test mode. The integrated control will automatically exit the Field Test mode after 45 minutes of operation

Blower Performance

A97DSMV070B12S BLOWER PERFORMANCE (less filter)

HEATING BLOWER PERFORMANCE

BOTTOM RETURN AIR

Heating Adjust CFM Selections	Heating Input Range and Blower Volume - CFM						
	40%	50%	60%	70%	80%	90%	100%.
Increase (+15%) Heat CFM	520	615	710	805	900	1000	1095
Increase (+7.5%) Heat CFM	485	575	665	755	840	930	1020
Default Heat CFM	450	535	615	700	785	865	950
Decrease (-7.5%) Heat CFM	415	495	570	650	725	800	880
Decrease (-15%) Heat CFM	380	455	525	595	665	735	810

COOLING BLOWER PERFORMANCE

Cooling Adjust CFM Selections	Blower Speed Selections							
	First Stage Cool Speed- cfm				Second Stage Cool Speed-cfm			
	Low	Medium Low	Medium High	High (Default)	Low	Medium Low	Medium High	High (Default)
Increase (+10%) Cool CFM	605	743	853	963	880	1045	1210	1375
Default Cool CFM	550	675	775	875	800	950	1100	1250
Decrease(-10%) Cool CFM	495	608	698	788	720	855	990	1125

A97DSMV090C16S BLOWER PERFORMANCE (less filter)

RIGHT SIDE RETURN AIR

HEATING BLOWER PERFORMANCE

Heating Adjust CFM Selections	Heating Input Range and Blower Volume - CFM						
	40%	50%	60%	70%	80%	90%	100%
Increase (15%) Heat CFM	775	910	1045	1180	1315	1445	1580
Increase (+7.5%) Heat CFM	725	850	975	1100	1225	1350	1480
Default Heat CFM	675	790	910	1025	1140	1260	1375
Decrease (-7.5%) Heat CFM	625	730	840	950	1055	1165	1270
Decrease(-15%) Heat CFM	575	675	770	870	970	1070	1170

COOLING BLOWER PERFORMANCE

Cooling Adjust CFM Selections	Blower Speed Selections							
	First Stage Cool Speed- cfm				Second Stage Cool Speed-cfm			
	Low	Medium Low	Medium High	High (Default)	Low	Medium Low	Medium High	High (Default)
Increase (+10%) Cool CFM	770	935	1073	1238	1100	1320	1540	1760
Default Cool CFM	700	850	975	1125	1000	1200	1400	1600
Decrease (-10%) Cool CFM	630	765	878	1013	900	1080	1260	1440

The effect of static pressure is included in air volumes shown.
The following control configurations are available. See Installation Instructions for details and DIP switch settings.
Heat Modes Available (Heating Blower Performance table):
Single stage thermostat:
- 40%, 70%. 100% input (three-stage) with time delays in-between

Two-stage thermostat:
- Variable Rate Capacity Mode - furnace automatically adjusts firing rate based on first- and second-stage cycle times
- W1 demand at 70% input, W2 demand at 100% input. No delay between stages

Cool Mode Available (Cooling Blower Performance table):
First stage COOL (two-stage air conditioning units only) is approximately 70% of the same second stage COOL speed position
Continuous Fan speeds are approximately 38% of the same second-stage COOL speed position minimum 300 cfm

A97DSMV090C20S BLOWER PERFORMANCE (less filter)

HEATING BLOWER PERFORMANCE

BOTTOM RETURN AIR

Heating Adjust CFM Selections	Heating Input Range and Blower Volume - CFM						
	40%	50%	60%	70%	80%	90%	100%.
Increase (+15%) Heat CFM	775	910	1045	1180	1315	1445	1580
Increase (+7.5%) Heat CFM	725	850	975	1100	1225	1350	1480
Default Heat CFM	675	790	910	1025	1140	1260	1375
Decrease (-7.5%) Heat CFM	625	730	840	950	1055	1165	1270
Decrease (-15%) Heat CFM	575	675	770	870	970	1070	1170

COOLING BLOWER PERFORMANCE

Cooling Adjust CFM Selections	Blower Speed Selections							
	First Stage Cool Speed- cfm				Second Stage Cool Speed-cfm			
	Low	Medium Low	Medium High	High (Default)	Low	Medium Low	Medium High	High (Default)
Increase (+10%) Cool CFM	935	1073	1238	1403	1320	1540	1760	2008
Default Cool CFM	850	975	1125	1275	1200	1400	1600	1825
Decrease(-10%) Cool CFM	765	878	1013	1148	1080	1260	1440	1643

A97DSMV110C20S BLOWER PERFORMANCE (less filter)

RIGHT SIDE RETURN AIR

HEATING BLOWER PERFORMANCE

Heating Adjust CFM Selections	Heating Input Range and Blower Volume - CFM						
	40%	50%	60%	70%	80%	90%	100%
Increase (15%) Heat CFM	890	1085	1275	1465	1660	1850	2040
Increase (+7.5%) Heat CFM	835	1015	1190	1370	1550	1730	1910
Default Heat CFM	775	940	1110	1275	1440	1610	1775
Decrease (-7.5%) Heat CFM	715	870	1025	1180	1335	1490	1640
Decrease(-15%) Heat CFM	660	800	940	1085	1225	1365	1510

COOLING BLOWER PERFORMANCE

Cooling Adjust CFM Selections	Blower Speed Selections							
	First Stage Cool Speed- cfm				Second Stage Cool Speed-cfm			
	Low	Medium Low	Medium High	High (Default)	Low	Medium Low	Medium High	High (Default)
Increase (+10%) Cool CFM	935	1073	1238	1403	1320	1540	1760	2008
Default Cool CFM	850	975	1125	1275	1200	1400	1600	1825
Decrease (-10%) Cool CFM	765	878	1013	1148	1080	1260	1440	1643

The effect of static pressure is included in air volumes shown.
The following control configurations are available. See Installation Instructions for details and DIP switch settings.
Heat Modes Available (Heating Blower Performance table):
Single stage thermostat:
- 40%, 70%. 100% input (three-stage) with time delays in-between

Two-stage thermostat:
- Variable Rate Capacity Mode - furnace automatically adjusts firing rate based on first- and second-stage cycle times
- W1 demand at 70% input, W2 demand at 100% input. No delay between stages

Cool Mode Available (Cooling Blower Performance table):
First stage COOL (two-stage air conditioning units only) is approximately 70% of the same second stage COOL speed position
Continuous Fan speeds are approximately 38% of the same second-stage COOL speed position minimum 300 cfm

Allowable Heating Speeds					
Model Number	**-15%**	**-7.5%**	**Default**	**+7.5%**	**+15%**
All Models	Allowed	Allowed	Factory Setting	Allowed	Allowed

Table 22.

Allowable Circulation Speeds	
Model Number	**38% of Second Stage Cooling**
All Models	Factory Setting

Table 23.

Operating Sequence		System Demand					System Response		
System Condition	Step	Thermostat Demand			Relative Humidity		Compressor	Blower CFM (COOL)	Comments
		1st Stage	O	G	Status	D			
NO CALL FOR DEHUMIDIFICATION									
Normal Operation	1	On	On	On	Acceptable	24 VAC	High	100%	Compressor and indoor blower follow thermostat demand
BASIC MODE (only active on a Y1 thermostat demand)									
Normal Operation	1	On	On	On	Acceptable	24 VAC	High	100%	Thermostat energizes Y1 and de-energizes D on a call for de-humidification
Dehumidification Call	2	On	On	On	Demand	0 VAC	High	70%	
PRECISION MODE (operates independent of a Y1 thermostat demand)									
Normal Operation	1	On	On	On	Acceptable	24 VAC	High	100%	Dehumidification mode begins when humidity is greater than set point
Dehumidification Call	2	On	On	On	Demand	0 VAC	High	70%	
Dehumidification Call ONLY	1	On	On	On	Demand	0 VAC	High	70%	Thermostat will keep outdoor unit energized after cooling temperature setpoint has been reached in order to maintain room humidity setpoint.
	• On-board links at indoor unit with a single stage outdoor unit • With Condensing unit - Cut W914 (R to OS) on integrated control • With Heat Pump - Cut W914 (R to DS) and W951 (R to O) on integrated control								

Table 24. Cooling Operating Sequence
A97DSMV and Single Stage Outdoor Unit

Operating Sequence		System Demand						System Response		
System Condition	Step	Thermostat Demand				Relative Humidity		Compressor	Blower CFM (COOL)	Comments
		1st Stage	2nd Stage	O	G	Status	D			
NO CALL FOR DEHUMIDIFICATION										
Normal Operation - Y1	1	On		On	On	Acceptable	24 VAC	Low	70%	Compressor and indoor blower follow thermostat demand
Normal Operation - Y2	2	On	On	On	On	Acceptable	24 VAC	High	100%	
ROOM THERMOSTAT CALLS FOR FIRST STAGE COOLING										
BASIC MODE (only active on a Y1 thermostat demand)										
Normal Operation	1	On		On	On	Acceptable	24 VAC	Low	70%	Thermostat energizes 2nd Stage and de-energizes D on a call for de-humidification
Dehumidification Call	2	On	On	On	On	Demand	0 VAC	High	70%	
PRECISION MODE (operates independent of a Y1 thermostat demand)										
Normal Operation	1	On		On	On	Acceptable	24 VAC	Low	70%	Dehumidification mode begins when humidity is greater than set point
Dehumidification Call	2	On	On	On	On	Demand	0 VAC	High	70%	
Dehumidification Call ONLY	1	On	On	On	On	Demand	0 VAC	High	70%	Thermostat will keep outdoor unit energized after cooling temperature setpoint has been reached in order to maintain room humidity setpoint.
ROOM THERMOSTAT CALLS FOR FIRST AND SECOND STAGE COOLING										
BASIC MODE (only active on a Y1 thermostat demand)										
Normal Operation	1	On	On	On	On	Acceptable	24 VAC	High	100%	Thermostat energizes 2nd Stage and de-energizes D on a call for de-humidification
Dehumidification Call	2	On	On	On	On	Demand	0 VAC	High	70%	
PRECISION MODE (operates independent of a Y1 thermostat demand)										
Normal Operation	1	On		On	On	Acceptable	24 VAC	Low	70%*\	Dehumidification mode begins when humidity is greater than set point
Dehumidification Call	2	On	On	On	On	Demand	0 VAC	High	70%	
Dehumidification Call ONLY	1	On	On	On	On	Demand	0 VAC	High	70%	Thermostat will keep outdoor unit energized after cooling temperature setpoint has been reached in order to maintain room humidity setpoint.
	• On-board links at indoor unit with a two stage outdoor unit • Cut factory link from Y1 to Y2 or cut W915 (Y1 to Y2) on integrated control • With Condensing unit - Cut W914 (R to OS) on integrated control • With Heat Pump - Cut W914 (R to DS) and W951 (R to O) on integrated control									

Table 25. Cooling Operating Sequence
A97DSMV and Two Stage Outdoor Unit

Unit Start-Up

FOR YOUR SAFETY READ BEFORE OPERATING

⚠ WARNING

Do not use this furnace if any part has been underwater. A flood damaged furnace is extremely dangerous. Attempts to use the furnace can result in fire or explosion. Immediately call a qualified service technician to inspect the furnace and to replace all gas controls, control system parts, and electrical parts that have been wet or to replace the furnace, if deemed necessary.

⚠ WARNING

Danger of explosion. Can cause injury or product or property damage. Should the gas supply fail to shut off or if overheating occurs, shut off the gas valve to the furnace before shutting off the electrical supply.

⚠ CAUTION

Before attempting to perform any service or maintenance, turn the electrical power to unit OFF at disconnect switch.

⚠ WARNING

During blower operation, the ECM motor emits energy that may interfere with pacemaker operation. Interference is reduced by both the sheet metal cabinet and distance.

Priming Condensate Trap

The condensate trap should be primed with water prior to startup to ensure proper condensate drainage. Either pour 10 fl. oz. (300 ml) of water into the trap, or follow these steps to prime the trap:

1. Follow the lighting instructions to place the unit into operation.
2. Set the thermostat to initiate a heating demand.
3. Allow the burners to fire for approximately 3 minutes.
4. Adjust the thermostat to deactivate the heating demand.
5. Wait for the combustion air inducer to stop. Set the thermostat to initiate a heating demand and again allow the burners to fire for approximately 3 minutes.
6. Adjust the thermostat to deactivate the heating demand and again wait for the combustion air inducer to stop. At this point, the trap should be primed with sufficient water to ensure proper condensate drain operation.

BEFORE PLACING THE UNIT INTO OPERATION

Smell all around the furnace area for gas. Be sure to smell next to the floor because some gas is heavier than air and will settle on the floor.

The gas valve on these units are equipped with a gas control switch. Use only your hand to move the control switch. Never use tools. If the switch will not move by hand, do not try to repair it. Force or attempted repair may result in a fire or explosion.

Placing the Furnace into Operation:

These units are equipped with an automatic ignition system. Do not attempt to manually light burners on this furnace. Each time the thermostat calls for heat, the burners will automatically light. The ignitor does not get hot when there is no call for heat on units with this ignition system.

⚠ WARNING

If you do not follow these instructions exactly, a fire or explosion may result causing property damage, personal injury or death.

Gas Valve Operation

See Figure 50

1. **STOP!** Read the safety information at the beginning of this section.
2. Set the thermostat to the lowest setting.
3. Turn OFF all electrical power to the unit.
4. This furnace is equipped with an ignition device which automatically lights the burners. DO NOT try to light the burners by hand.
5. Remove the access panel.
6. Move the gas valve switch to the OFF position. See Figure 50.
7. Wait five minutes to clear out any gas. If you then smell gas, STOP! Immediately call the gas supplier from a neighbor's phone. Follow the gas supplier's instructions. If you do not smell gas go to the next step.
8. Move gas valve switch to the ON position. See Figure 50. **DO Not** force.

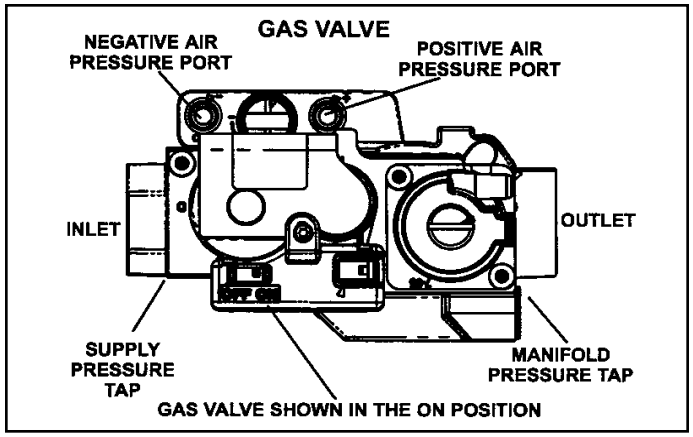

Figure 50.

9. Replace the access panel.
10. Turn on all electrical power to the unit.
11. Set the thermostat to desired setting.

    NOTE: *When unit is initially started, steps 1 through 11 may need to be repeated to purge air from gas line.*

12. If the Appliance will not operate, follow the instructions "Turning Off Gas to Unit" and call the gas supplier.

Turning Off Gas to Unit

1. Set the thermostat to the lowest settling.
2. Turn OFF all electrical power to the unit if service is to be performed.
3. Remove the access panel.
4. Move the gas valve switch to the OFF position.
5. Replace the access panel.

Failure To Operate

If the unit fails to operate, check the following:

1. Is the thermostat calling for heat?
2. Are access panels securely in place?
3. Is the main disconnect switch closed?
4. Is there a blown fuse?
5. Is the filter dirty or plugged? Dirty or plugged filters will cause the limit control to shut the unit off.
6. Is gas turned on at the meter?
7. Is the manual main shut Off valve open?
8. Is the gas valve turned on?
9. Is the unit ignition system in lock out: If the unit locks out again, inspect the unit for blockages.
10. Is blower harness connected to ignition control? Furnace will not operate unless harness is connected.

Gas Pressure Measurement

Gas Flow (Approximate)

Gas Meter Clocking Chart				
A97DSMV Unit	Seconds for One Revolution			
	Natural		LP	
	1 cu ft Dial	2 cu ft Dial	1 cu ft Dial	2 cu ft Dial
-70	55	110	136	272
-90	41	82	102	204
-110	33	66	82	164
	Natural - 1000 btu/cu ft		LP - 2500 btu/cu ft	

Table 26.

Furnace should operate at least 5 minutes before checking gas flow. Determine time in seconds for two revolutions of gas through the meter. (Two revolutions assures a more accurate time.) Divide by two and compare to time in Table 26. If manifold pressure matches Table 30 and rate is incorrect, check gas orifices for proper size and restriction. Remove temporary gas meter if installed.

NOTE: *To obtain accurate reading, shut off all other gas appliances connected to meter.*

Supply Pressure Measurement

A threaded plug on the inlet side of the gas valve provides access to the supply pressure tap. Remove the threaded plug, install a field provided barbed fitting and connect a manometer to measure supply pressure. Replace the threaded plug after measurements have been taken.

Manifold Pressure Measurement

To correctly measure manifold pressure, the differential pressure between the positive gas manifold and the negative burner box must be considered. Use pressure test adapter kit (available as part 10L3) to assist in measurement.

1. Remove the threaded plug from the outlet side of the gas valve and install a field provided barbed fitting. Connect test gauge "+" connection to barbed fitting to measure manifold pressure.
2. Tee into the gas valve regulator vent hose and connect test gauge "-" connection.
3. Start unit on low heat (40% rate) and allow 5 minutes for unit to reach steady state.
4. While waiting for the unit to stabilize, notice the flame. Flame should be stable and should not lift from burner. Natural gas should burn blue.
5. After allowing unit to stabilize for 5 minutes, record manifold pressure and compare to value given in Table 30.
6. Repeat steps 3, 4 and 5 on HIGH HEAT.

NOTE: *Shut unit off and remove manometer as son as an accurate reading has been obtained. Take care to remove barbed fitting and replace threaded plug.*

> ⚠ **CAUTION**
>
> **DO NOT** attempt to make adjustments to the gas valve.

Operating Pressure Signal

Operating pressure signal can be taken while the manifold pressure check is taken (using two measuring devices). Or, taken after the manifold pressure measurement is complete.

1. Tee into the negative line between the gas valve and pressure switch and correct to measuring device negative "-".
2. Tee into the positive line between the gas valve and pressure switch and connect to measuring device positive "+".
3. Start unit on low heat (40% rate) and allow 5 minutes for unit to reach steady state.
4. After allowing unit to stabilize for 5 minutes, record operating pressure signal and compare to value given in Table 30.
5. Repeat steps 3 - 4 on high heat.

Proper Combustion

Furnace should operate a minimum of 15 minutes with correct manifold pressure and gas flow rate before checking combustion. Take combustion sample beyond the flue outlet and compare to the tables below. The maximum carbon monoxide reading should not exceed 100 ppm.

A97DSMV Unit	CO_2% for Nat	CO_2% for L.P.
070B12	7.6 - 8.6	9.1 - 10.0
090C12		
090C16		
090C20		
110C20		

Table 27. High Fire

A97DSMV Unit	CO_2% for Nat	CO_2% for L.P.
070B12	5.7	7.2 - 8.2
090C12	5.3 - 6.3	6.8 - 7.8
090C16		
090C20		
110C20		

Table 28. Low Fire

High Altitude Information

NOTE: *In Canada, certification for installation at elevations over 4500 feet (1372 m) is the jurisdiction of local authorities.*

These units require no manifold pressure adjustments for operation at altitudes up to 7,500 feet (2286 m) above sea level. Table 29 lists conversion kit requirements, pressure switch requirements and manifold pressures at all altitudes.

The combustion air pressure switch is factory set and requires no adjustment.

Model Input Size	LP/Propane Kit	High Altitude Pressure Switch Kit	
	0 - 10,000 (0-3048 m)	0 - 7,500 (0 - 2286 m)	7,501 - 10,000 (2287 - 3048m)
70	68W77	Not required	14T67
90			
110			

Table 29. Conversion Kit Requirements

Firing Rate	Manifold Pressure Nat Gas			Manifold Pressure LP/Propane			Operating Pressure Signal (Delta P)		
	Min	Normal	Max	Min	Normal	Max	Min	Normal	Max
40%	0.5	0.6	0.7	1.3	1.6	1.9	0.25	0.30	0.35
70%	1.7	1.9	2.1	5.1	5.5	5.9	0.60	0.65	0.70
100%	3.2	3.5	3.8	9.5	10.0	10.5	1.10	1.15	1.20

NOTE: *The values given in table are measurements only. The gas valve should NOT be adjusted.*

NOTE: *A natural to LP/propane gas changeover kit (Table 29) is necessary to convert this unit. Refer to the changeover kit installation instructions for the conversion procedure.*

Table 30. Manifold and Operating Signal Pressures in inches 0-7500 ft (0-2286 m)

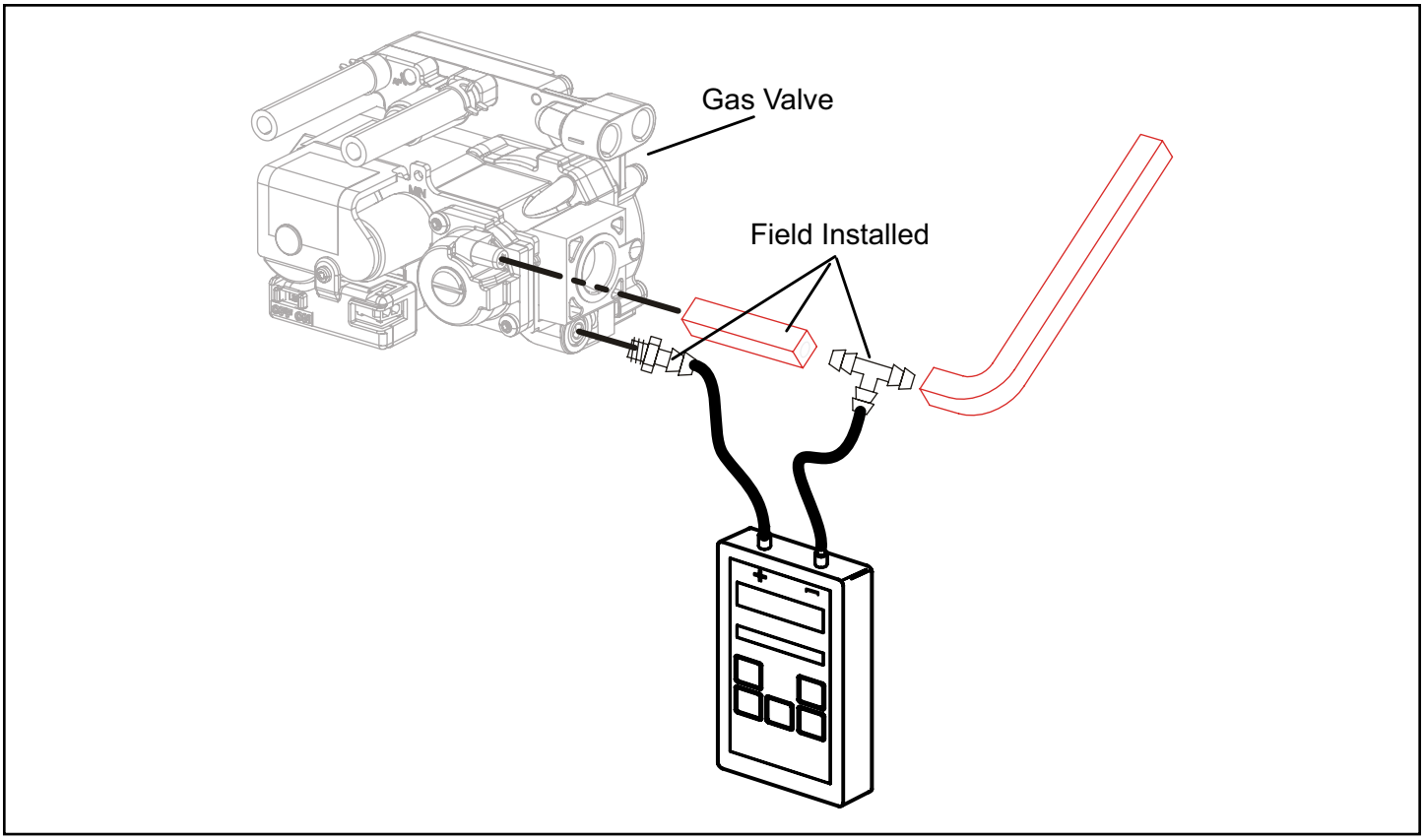

Figure 51. Manifold Pressure Measurement

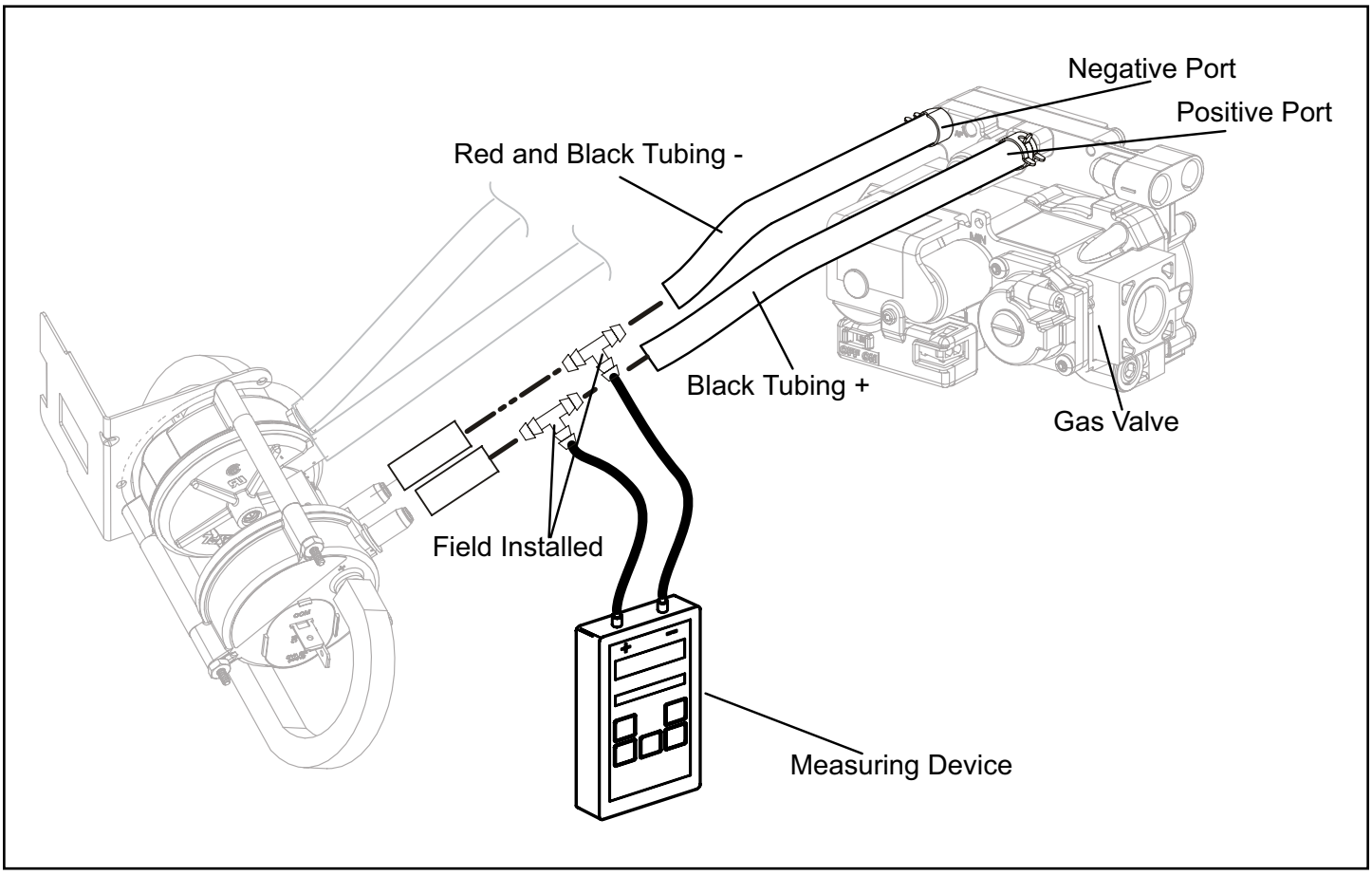

Figure 52. Operation Signal (Delta P) Measurement

Other Unit Adjustments

Primary Limit
The primary limit is located on the heating compartment vestibule panel. This limit is factory set and requires no adjustment.

Flame Rollout Switches (Two)
These manually reset switches are located on the inside of the burner box. If tripped, check for adequate combustion air before resetting.

Pressure Switches (Two)
The pressure switches are located on the cold end header box. These switches check for proper combustion air inducer operation before allowing ignition trial. The switches are factory set and require no adjustment. Pressure switch tubing installation is critical for safe operation. See Figure 53 below.

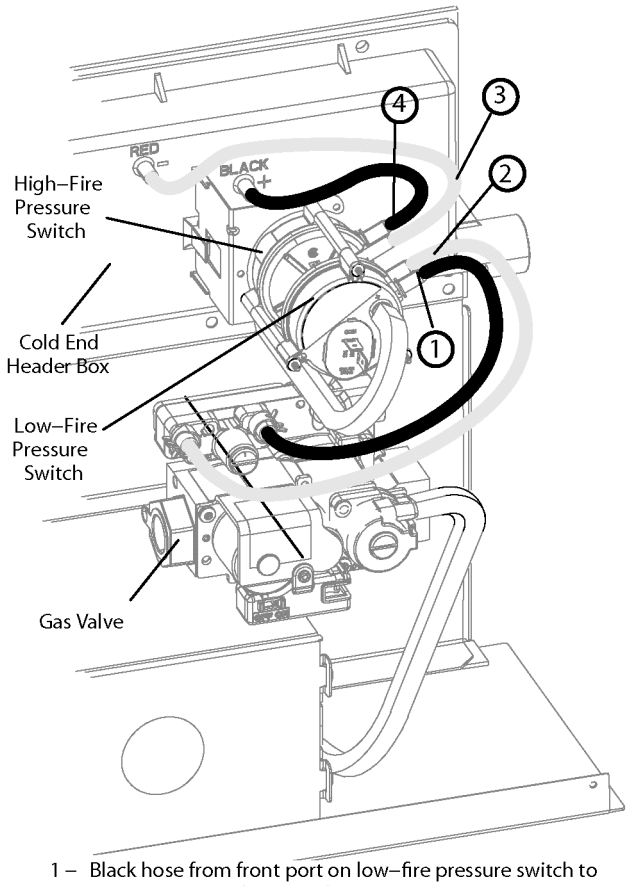

1 – Black hose from front port on low–fire pressure switch to positive port on the gas valve.
2 – Red hose from rear port on low–fire pressure switch to the negative port on the gas valve.
3 – Red hose from front port on high–fire pressure switch to negative port on cold end header box.
4 – Black hose from rear port on high–fire pressure switch to positive port on cold end header box.

Figure 53. Pressure Switch Tubing Installation

Temperature Rise
After the furnace has been started and supply and return air temperatures have been allowed to stabilize, check the temperature rise with the unit operating at 100 percent firing rate. If necessary, adjust the blower speed to maintain the temperature rise within the range shown on the unit nameplate. See Table 22 for allowable heating speeds. Increase the blower speed to decrease the temperature. Decrease the blower speed to increase the temperature. Failure to adjust the temperature rise may cause erratic limit operation.

Thermostat Heat Anticipation
Set the heat anticipator setting (if adjustable) according to the amp draw listed on the wiring diagram that is attached to the unit.

Electronic Ignition
The integrated control has a feature that serves as an automatic reset device for ignition control lockout caused by ignition failure. This type of lockout is usually due to low gas line pressure. After one hour of continuous thermostat demand for heat, the control will break and remake thermostat demand to the furnace and automatically reset the control to begin the ignition sequence.

Exhaust and Air Intake Pipe
1. Check exhaust and air intake connections for tightness and to make sure there is not blockage.
2. Are pressure switches closed? Obstructed exhaust pipe will cause unit to shut off at pressure switches. Check termination for blockages.
3. Reset manual flame rollout switches on burner box cover.

Heating Sequence of Operation

The integrated control initiates a pressure switch calibration at the initial unit start-up on a call for heat. The ignition control will also initiate a calibration any time main power is turned off and back on and a heating demand is present. Additional calibrations may be initiated by the service technician during field test sequence. The following heating sequence of operation assumes completion of a successful calibration.

NOTE: *In Comfort Sync™ communicating applications, the sequence of operation is the same but all DIP switch settings are overridden by the thermostat.*

NOTE: *The thermostat selection DIP switch on the integrated control is factory set in the "TWO STAGE" position.*

Applications Using a Two Stage Thermostat

A-Heating Sequence - Control Thermostat Selection DIP switch in "Two Stage" Position (Factory Settling)

1. On a call for heat, thermostat first stage contacts close sending a signal to the integrated control. The integrated control runs a self diagnostic program and checks high temperature limit switches for normally closed contacts and pressure switches for normally open contacts. The combustion air inducer is energized at ignition speed, which is approximately the same as the inducer speed at 70 percent firing rate.
2. Once the control receives a signal that the low fire pressure switch has closed, the combustion air inducer begins a 15 second pre-purge in the ignition speed.
3. After the pre-purge is complete, a 20 second initial ignitor warm up period begins. The combustion air inducer continues to operate at the ignition speed.
4. After the 20 second warm up period has ended, the gas valve is energized and ignition occurs. At the same time, the control module sends a signal to begin an indoor blower 30 second ON delay. When the delay ends, the indoor blower motor is energized at a speed that matches the firing rate. After the 10 second ignition stabilization delay expires, the inducer speed is adjusted to the appropriate target rate. The inducer will remain at the 70 percent speed as long as the thermostat has a first stage heating demand.
5. If second stage heat is required, the thermostat second stage heat contacts close and send a signal to the integrated control. The integrated control initiates a 30 second stage recognition delay.
6. At the end of the recognition delay and on all subsequent calls for heat in the same heating cycle, the integrated control energizes the combustion air inducer at high speed. The control also checks the high fire pressure switch to make sure it is closed. As the inducer speed is increased to high, the indoor blower motor is adjusted to a speed which is appropriate for the target rate.
7. When the demand for high fire (second stage) heat is satisfied, the gas valve is de-energized and the field selected indoor blower off delay begins. The combustion air inducer begins a 20 second post purge period.
8. When the combustion air post purge period is complete, the inducer is de-energized. The indoor blower is de-energized at the end of the off delay.

Application Using a Two Stage Thermostat

B - Heating Sequence - Control Thermostat Selection DIP switch in "Variable Capacity" Position

1. On a call for heat, thermostat first stage contacts close sending a signal to the integrated control. The integrated control runs a self diagnostic program and checks high temperature limit switches for normally closed contacts and pressure switches for normally open contacts. The combustion air inducer is energized at ignition speed, which is approximately the same as the inducer speed at 70 percent firing rate.
2. Once the control receives a signal that the low fire pressure switch has closed, the combustion air inducer begins a 15 second pre-purge in low speed.
3. After the pre-purge is complete, a 20 second initial ignitor warm-up period begins. The combustion air inducer continues to operate at the ignition speed.
4. After the 20 second warm up period has ended, the gas valve is energized and ignition occurs. At the same time, the control module begins an indoor blower 30 second ON delay. When the delay ends, the indoor blower motor is energized at a speed that matches the firing rate. After the 10 second ignition stabilization delay expires, the inducer speed is adjusted to the appropriate target rate. If the furnace is operating in the initial heating cycle after power up, the initial firing rate will be approximately 40 percent. The firing rate on subsequent cycles will be automatically adjusted by the integrated control based on thermostat cycles. The firing rate will vary and will range from 40 percent to 90 percent. The furnace will continue this operation as long as the thermostat has a first stage heating demand.
5. If second-stage heat is required, the thermostat second stage heat contacts close and send a signal to the integrated control. The integrated control either increases the firing rate to 70 percent (if the current rate is at or below 60 percent) or increases the firing rate by 10 percent (if the current rate is above 60 percent). If the call for heat continues 5 minutes beyond this initial upstage, the rate will be increased by 10 percent every 5 minutes until the call for heat is satisfied or the furnace reaches 100 percent rate. As

the firing rate increases, the indoor blower motor is adjusted to a speed which is appropriate for the target rate.

6. If second-stage heat demand is satisfied, but first stage is still present, the furnace will continue to operate at the present firing rate until the heat cycle ends.
7. When the demand for first and second stage heat is satisfied, the gas valve is de-energized and the field-selected indoor blower off delay begins. The combustion air inducer begins a 20 second post-purge period.
8. When the combustion air post purge period is complete, the inducer is de-energized. The indoor blower is de-energized at the end of the off delay.

Applications Using A Single-Stage Thermostat

C - Heating Sequence — Control Thermostat Selection DIP switch in “Single Stage” Position

1. On a call for heat, thermostat first stage contacts close sending a signal to the integrated control. The integrated control runs a self-diagnostic program and checks high temperature limit switches for normally closed contacts and pressure switches for normally open contacts. The combustion air inducer is energized at the ignition speed, which is approximately the same as the inducer speed at 70 percent firing rate.
2. Once the control receives a signal that the low fire pressure switch has closed, the combustion air inducer begins a 15 second pre-purge at the ignition speed.
3. After the pre-purge is complete, a 20 second initial ignitor warm up period begins. The combustion air inducer continues to operate at the ignition speed.
4. After the 20 second warm up period has ended, the gas valve is energized and ignition occurs, which initiates a 10 second ignition stabilization delay. At the same time, the control module sends a signal to begin an indoor blower 30 second ON delay. When the delay ends, the indoor blower motor is energized at a speed which is appropriate for the firing rate. After the 10 second ignition stabilization delay expires, the inducer speed is adjusted to 40 percent speed. The integrated control also initiates a second-stage on delay (factory set at 7 minutes; adjustable to 12 minutes).
5. If the heating demand continues beyond the second stage on delay, the integrated control energizes the combustion air inducer at 70 percent speed. The indoor blower motor is adjusted to a speed which matches the target rate. A fixed, 10 minute third stage on delay is initiated.
6. If the heating demand continues beyond the third stage on delay, the integrated control energizes the inducer at high speed. The indoor blower motor is adjusted to a speed which is appropriate for the target rate.
7. When the thermostat heating demand is satisfied, the gas valve is de-energized and the combustion air inducer begins a 20 second post purge. The field selected indoor blower off delay begins.
8. When the combustion air post purge period is complete, the inducer is de-energized. The indoor blower is de-energized at the end of the off delay.

Service

⚠ WARNING

ELECTRICAL SHOCK, FIRE, OR EXPLOSION HAZARD

Failure to follow safety warnings exactly could result in dangerous operation, serious injury, death or property damage.

Improper servicing could result in dangerous operation, serious injury, death, or property damage.

Before servicing, disconnect all electrical power to furnace.

When servicing controls, label all wires prior to disconnecting. Take care to reconnect wires correctly.

Verify proper operation after servicing.

At the beginning of each heating season, system should be checked as follows by a qualified service technician:

Blower

Check the blower wheel for debris and clean if necessary. The blower motors are pre-lubricated for extended bearing life. No further lubrication is needed.

⚠ WARNING

The blower access panel must be securely in place when the blower and burners are operating. Gas fumes, which could contain carbon monoxide, can be drawn into living space resulting in personal injury or death.

Filters

All filters are installed external to the unit. Filters should be inspected monthly. Clean or replace the filters when necessary to ensure proper furnace operation. Table 3 lists recommended filter sizes.

Exhaust and Air Intake Pipes

Check the exhaust and air intake pipes and all connections for tightness and to make sure there is no blockage.

NOTE: *After any heavy snow, ice or frozen fog event the furnace vent pipes may become restricted. Always check the vent system and remove any snow or ice that may be obstructing the plastic intake or exhaust pipes.*

Electrical

1. Check all wiring for loose connections.
2. Check for the correct voltage at the furnace (furnace operating). Correct voltage is 120VAC +/-10%.
3. Check amp-draw on the blower motor with the blower access panel in place.

   Motor Nameplate _____ Actual _____

Winterizing and Condensate Trap Care

1. Turn off power to the unit.
2. Have a shallow pan ready to empty condensate water.
3. Remove the drain cap from the condensate trap and empty water. Inspect the trap then reinstall the drain cap.

Cleaning Heat Exchanger

If cleaning the heat exchanger becomes necessary, follow the below procedures and refer to Figure 1 when disassembling unit. Use papers or protective covering in front of furnace while removing heat exchanger assembly.

1. Turn off electrical and gas supplies to the furnace.
2. Remove the furnace access panels.
3. Disconnect the 2 pin plug from the gas valve.
4. Remove gas supply line connected to gas valve. Remove the burner box cover and remove gas valve manifold assembly.
5. Remove sensor wire from sensor. Disconnect 2 pin plug from the ignitor.
6. Disconnect wires from flame rollout switches.
7. Remove four (4) burner box screws at the vestibule panel and remove burner box. Set burner box assembly aside.

   NOTE: *If necessary, clean burners at this time. Follow procedures outlined in "Burner Cleaning" section.*

8. Loosen the clamps to the flexible exhaust coupling.
9. Disconnect condensate drain line from the cold end header box.
10. Disconnect condensate drain tubing from flue collar. Remove screws that secures the flue collar into place. Remove flue collar. It may be necessary to cut the exiting exhaust pipe for removal of the fitting.
11. Mark and disconnect all combustion air pressure tubing from cold end header collector box.
12. Mark and remove wires from pressure switches. Remove pressure switches. Keep tubing attached to pressure switches.
13. Disconnect the 4 pin plug from the combustion air inducer. Remove two screws which secure combustion air inducer to collector box. Remove combustion air inducer assembly. Remove ground wire from vest panel.
14. Remove electrical junction box from the side of the furnace.
15. Mark and disconnect any remaining wiring to heating compartment components. Disengage strain relief bushing and pull wiring and bushing through the hole in the blower deck.
16. Remove the primary limit from the vestibule panel.
17. Remove two screws from the front cabinet flange at the blower deck. Spread cabinet sides slightly to allow clearance for removal of heat exchanger.

Planned Service

A service technician should check the following items during an annual inspection. Power to the unit must be shut off for the service technician's safety.

Burners - Must be inspected for rust, dirt, or signs of water.

Vent pipe - Must be inspected for signs of water, cracked, damaged or sagging pipe, or disconnected joints.

Unit appearance - Must be inspected for rust, dirt, signs of water, burnt or damaged wires, or components.

Blower access door - Must be properly in place and provide a seal between the return air and the room where the furnace is installed.

Return air duct - Must be properly attached and provide an air seal to the unit.

Operating performance - Unit must be observed during operation to monitor proper performance of the unit and the vent system.

Combustion gases - Flue products must be analyzed and compared to the unit specifications.

Problems detected during the inspection may make it necessary to temporarily shut down the furnace until the items can be repaired or replaced.

Instruct the homeowners to pay attention to their furnace. Situations can arise between annual furnace inspections that may result in unsafe operation.

Repair Parts List

The following repair parts are available through Allied Air distributors. When ordering parts, include the complete furnace model number listed on the nameplate. All service must be performed by a licensed professional installer (or equivalent), service agency, or gas supplier.

Cabinet Parts
- Heating Compartment Access Panel
- Blower Access Panel
- Top Cap

Control Panel Parts
- Transformer
- Integrated Control Board
- Door Interlock Switch
- Circuit Breaker

Blower Parts
- Blower Wheel
- Motor
- Motor Mounting Frame
- Blower Housing Cut Off Plate
- Power Choke (1 HP only)

Heating Parts
- Flame Sensor
- Heat Exchanger Assembly
- Gas Manifold
- Combustion Air Inducer
- Gas Valve
- Main Burner Cluster
- Main Burner Orifices
- Pressure Switch
- Ignitor
- Primary Limit Control
- Flame Rollout Switches

Integrated Control Diagnostic Codes

Press the diagnostic push button and hold it to cycle through a menu of options. Every five seconds a new menu item will be displayed.

Release the button when the desired mode is displayed.

When a solid “P” is displayed, the furnace capacity/ size is programmed.

When the solid “E” is displayed, the control enters the Error Code Recall mode. Error Code Recall mode menu options: No change (displaying error history) remains in Error Code Recall mode; solid “b” exits Error Code Recall mode; and solid “c” clears the error history. Must press button while flashing “c” is displayed to clear error codes.

When the solid “-” is displayed, the control enters the Field Test mode. Field Test mode menu options: Solid “C” starts pressure switch calibration; blinking “-” exits Field Test mode.

Code	Diagnostic Codes / Status of Equipment	Action Required to Clear and Recover
	Idle mode (Decimal blinks at 1 Hertz - 0.5 seconds ON, 0.5 seconds OFF).	
A	Cubic feet per minute (cfm) setting for indoor blower (1 second ON, 0.5 seconds OFF) / cfm setting for current mode displayed.	
C	Cooling stage (1 second ON, 0.5 seconds OFF) / 1 or 2 displayed / Pause / cfm setting displayed / Pause / Repeat codes.	
d	Dehumidification mode (1 second ON, 1 second OFF) / cfm setting displayed / Pause / Repeat codes.	
h	Heat pump stage (1 second ON, 0.5 seconds OFF) / % of input rate displayed / Pause / cfm setting / Pause / Repeat codes.	
H	Gas Heat stage (1 second ON, 0.5 seconds OFF) / 1 or 2 displayed / Pause / cfm setting displayed / Pause / Repeat codes. Blinking during ignition.	
dF	Defrost mode.	

Integrated Control Diagnostic Codes *(continued)*

Code	Diagnostic Codes / Status of Equipment	Action Required to Clear and Recover
E105	Device communication problem - No other devices on RS BUS (Communication system).	Equipment is unable to communicate. Indicates numerous message errors. In most cases, errors are related to electrical noise. Make sure high voltage power is separated from RSBus. Check for mis-wired and/or loose connections between the stat, indoor unit, and outdoor unit. Check for a high voltage source of noise close to the system. Fault clears after communication is restored.
E110	Low line voltage.	Line Voltage low (Voltage tower than nameplate rating). Check power line voltage and correct. Alarm clears 5 seconds after fault recovered.
E113	High line voltage.	Line Voltage high (Voltage higher than nameplate rating). Provide power voltage within proper range. System resumes normal operation 5 seconds after fault recovered.
E114	Line voltage frequency out-of-range.	No 60 Hertz power. Check voltage and line power frequency. Correct voltage and frequency problems. System resumes normal operation 5 seconds after fault recovered.
E115	Low 24V - Control will restart if the error recovers.	24 Volt Power high (Range is 18 to 30 Volts). Check and correct voltage. Check for additional power robbing equipment connected to system. May require installation of larger VA transformer to be installed in furnace/air handler. Clears after fault recovered.
E120	Unresponsive device (Communicating systems only).	Usually caused by delay in outdoor unit responding to indoor unit poling. Recycle power. Check all wiring connections. Cleared after unresponsive device responds to any inquiry.
E124	Active communicating thermostat signal missing for more than 3 minutes (Communicating systems only).	Equipment lost communication with the thermostat. Check four wiring connections, ohm wires, and cycle power at the thermostat. Alert stops all services and waits for heartbeat message from thermostat (subnet controller). Cleared after valid thermostat (subnet) message is received.
E125	Control failed self-check, internal error, failed hardware. Will restart if error recovers, Integrated control not communicating Covers hardware errors (flame sense circuit faults, pin shorts, etc).	Hardware problem on the control. Cycle power on control. Replace if problem prevents service and is persistent. Cleared 300 seconds after fault recovered.
E126	Control internal communication problem.	Hardware problem on the control. Cycle power on control. Replace if problem prevents service and is persistent. Cleared 300 seconds after fault recovered.
E131	Corrupted control parameters (Verify configuration of system) (Communicating systems only).	Reconfigure the system. Replace control if heating or cooling is not available. Only applicable in the communicating mode not in startup. Exit from Commissioning and Execute Se+ factory Default mode. Control will still operate on default parameter settings.

Integrated Control Diagnostic Codes *(continued)*

Code	Diagnostic Codes / Status of Equipment	Action Required to Clear and Recover
E180	Outdoor air temperature sensor failure. Only shown if shorted or out of range (Communicating systems only)	Compare outdoor sensor resistance to temperature resistance charts in unit installation instructions. Replace sensor pack if necessary. At beginning of (any) configuration, furnace or air handler control will sense outdoor air and discharge air temperature sensor(s) If detected (reading in range), appropriate feature will be set as installed and that could be seen in 'About ' screen. In normal operation after control recognizes sensors, alarm will be sent if valid temperature reading is lost. To get rid of setting and alarm, redo configuration and make sure that temperature sensor is marked as not installed in indoor Unit 'About' screen. When indoor unit control is replaced thermostat will 'tell' new control if temperature sensor is in system or not. Clears 30 seconds after fault recovered.
E200	Hard Lock out - Rollout circuit open or previously open	Correct cause of rollout trip or replace flame rollout switch. Test furnace operation. Cleared after fault recovered.
E201	Indoor blower/communication failure - Unable to communicate with blower motor	Indoor blower communication failure including power outage. Lost communication with indoor blower motor. Possible causes: motor not powered, loose wiring. Problem may be on control or motor side. Cleared after fault recovered.
E202	Indoor blower motor mismatch - indoor motor horsepower does not match unit capacity	Incorrect appliance capacity code selected. Check for proper configuring under Unit Size Code for Furnace/ Air Handler on configuration guide or in installation instructions. Cleared after the correct match is detected following a reset. (Remove thermostat from system while applying power and reprogramming)
E203	Appliance capacity size is NOT programmed. Invalid unit codes. Refer to configuration flow chart.	No appliance capacity code selected. Check for proper configuring under Unit Size Codes for Furnace on configuration guide or in installation instruction. Critical Alert Cleared after valid unit code is read following a reset (remove thermostat from system while applying power and reprogramming)
E204	Gas valve mis-wired	Check gas valve operation and wiring. Clears when repaired
E205	Gas valve control relay contact shorted	Check wiring on control and gas valve. If wiring is correct replace control.
E207	Hot surface igniter sensed open - Refer to troubleshooting	Measure resistance of hot surface igniter. Replace if open or not within specified range found in 10M. Resumes normal operation after fault is cleared.
E223	Low pressure switch failed open	Check pressure(inches W.C) of low pressure switch closing on heat call. Measure operating pressure (inches w.c.). Inspect vent and combustion air inducer for correct operation and restriction. Resumes normal operation after fault is cleared.

Integrated Control Diagnostic Codes *(continued)*

Code	Diagnostic Codes / Status of Equipment	Action Required to Clear and Recover
E224	Low pressure switch failed closed -Refer to troubleshooting	Check pressure(inches W.C) of low pressure switch closing on heat call. Measure operating pressure (inches w.c.). Inspect vent and combustion air inducer for correct operation and restriction. Resumes normal operation after fault is cleared.
E225	High pressure switch failed open -Refer to troubleshooting	Check pressure(inches W.C) of high pressure switch closing on heat call. Measure operating pressure (inches w.c. Inspect vent and combustion air inducer for correct operation and restriction Resumes normal operation after fault is cleared.
E226	High pressure switch failed closed -Refer to troubleshooting	Check operation of high pressure closing on heat call. Measure operating pressure (inches w.c.). Inspect vent and combustion air inducer for correct operation and restriction. Resumes normal operation after fault is cleared.
E227	Low pressure switch open during trial for ignition or run mode. Refer to troubleshooting	Check operation of low pressure switch closing on heat call. Measure operating pressure (inches w.c.). Inspect vent and combustion air inducer for correct operation and restriction. Resumes normal operation after fault is cleared.
E228	Combustion air inducer calibration failure	Unable to perform pressure switch calibration. Check vent system and pressure switch wiring connections. Resumes normal operation after fault is cleared
E229	Ignition on high fire	IFC switched to high fire ignition because low fire pressure switch did not close in allowed time. No action is needed.
E240	Low flame current - Run mode- Refer to troubleshooting	Check micro-amperes of flame sensor using control diagnostics or field installed mode. Clean or replace sensor. Measure voltage of neutral to ground to ensure good unit ground. Alert clears after current heat all has been completed.
E241	Flame sensed out of sequence-Flame still present.	Shut off gas. Check for gas valve leak. Replace if necessary. Alert clears when fault is recovered.
E250	Limit switch circuit open - Refer to troubleshooting.	Check for proper firing rate on furnace. Ensure there is no blockage in heater. Check for proper air flow. If limit not closed within 3 minutes unit will go into 1 hour soft lockout. Resumes normal operation after fault is cleared.
E252	Discharge air temperature too high (gas heat only).	Check temperature rise airflow and input rate. Clear when heat call is finished.
E270	Soft lockout - Exceeded maximum number of retries. No flame current sensed.	Check for proper gas flow. Ensure that igniter is lighting burners. Check flame sensor current. Clears when heat call finishes successfully.
E271	Soft lockout - Exceeded maximum number of retries. Last retry failed due to the pressure switch opening.	Check pressure (inches w.c.) of low pressure switch closing on heat call. Measure operating pressure (inches w.c.). Inspect vent and combustion air inducer for correct operation and restriction. Clears when heat call finishes successfully.

Integrated Control Diagnostic Codes *(continued)*

Code	Diagnostic Codes / Status of Equipment	Action Required to Clear and Recover
E272	Soft lockout - Exceeded maximum number of recycles. Last recycle due to the pressure switch opening	Check operation of low pressure to see if it is stuck closed on heat call. Check pressure (inches w.c.) of high pressure switch closing on heat call. Measure operating pressure. Inspect vent and combustion air inducer for correct operation and restriction. Clears when heat call finishes successfully.
E273	Soft lockout - Exceeded maximum number of recycles. Last recycle due to flame failure	Check micro-amperes of flame sensor using control diagnostics or field installed mode. Clean or replace sensor. Measure voltage of neutral to ground to ensure good unit ground. Alert clears after current heat call has been completed.
E274	Soft lockout - Exceeded maximum number of recycles. Last recycle failed due to the limit circuit opening or limit remained open longer than 3 minutes.	Shut down system 1-hour soft lockout. Check firing rate and air flow. Check for blockage. Clears when heat call finishes successfully.
E275	Soft lockout - Flame sensed out of sequence. Flame signal is gone.	Shut off gas. Check for gas valve leak. 1-hour soft lockout. Clears when flame has been proven stable.
E276	Watchguard calibration failure.	Unable to perform pressure switch calibration. Check vent system and pressure switch wiring connections. 1-hour soft lockout. Clears when calibration has finished successfully.
E290	Ignitor circuit fault - Failed ignitor or triggering circuitry.	Measure resistance of hot surface igniter. Replace if open or not within specifications. 1-hour soft lockout. Clears when flame has been proven stable.
E291	Heat airflow restricted below the minimum.	Check for dirty filter and airflow restriction. Check blower performance. 1-hour soft lockout. Cleared when heat call finishes successfully.
E292	Indoor blower motor unable to start due to obstructed wheel seized bearings.	Indoor blower motor unable to start (seized bearing, stuck wheel, etc.) Replace motor or wheel if assembly does not operate or meet performance standards. 1-hour soft lockout. Clears after circulator successfully starts.
E294	Combustion air inducer over current.	Check combustion blower bearings wiring and amps. Replace if does not operate or does not meet performance standards. Clears after inducer current is sensed to be in-range after the ignition following the soft lockout or reset.
E295	Indoor blower motor temperature is too high.	Indoor blower motor over temperature (motor tripped on internal protector). Check motor bearings and amps. Replace if necessary. Cleared after blower demand is satisfied.
E310	Discharge error temperature sensor failure. Only shown if shorted or out of range.	Compare discharge sensor resistance to temperature resistance charts in installation instructions.. Replace sensor if necessary. Cleared in Communicating mode 30 seconds after fault recovered. In Non-Communicating mode cleared after the current heat call is completed.

Integrated Control Diagnostic Codes *(continued)*

Code	Diagnostic Codes / Status of Equipment	Action Required to Clear and Recover
E311	Heat rate reduced to match indoor blower airflow.	Warning Only. Furnace blower in cutback mode due to restricted airflow. Reduce firing rate every 60 seconds to match available CFM. Check filter and duct system. To clear replace filter if needed or repair/add duct. 2-stage controls will reduce firing rate to 1-stage. Clears when heat call finished successfully.
E312	Restricted airflow in cooling or continuous fan mode is lower than CFM setting.	Warning Only. Restricted airflow - Indoor blower is running at a reduced CFM (Cutback Mode - The variable speed motor has pre-set speed and torque limiters to protect the motor from damage caused by operating outside of design parameters (0 to 0.8" W.C. total external static pressure). Check filter and duct system. To clear, replace filter if needed or repair/ add duct. Cleared after the current service demand is satisfied.
E313	Indoor or outdoor unit capacity mismatch. Communication only.	Incorrect indoor/outdoor capacity code selected. Check for proper configuring in installation instructions. Alarm is just a warning. The system will operate, but might not meet efficiency and capacity parameters. Alarm will clear when commissioning is complete.
E331	Global network connection - Communications link problem.	For Future Use.
E347	No 24 Volt output on Y1 of "integrated control" with non-communicating outdoor unit.	Operation stopped. Y1 relay/Stage 1 failed. (Pilot relay contacts did not close or the relay coil did not energize; no input back to IFC chip.) Critical Alert. Cleared after reset and Y1 input sensed.
E348	No 24 Volt output on Y2 of "integrated control" with non-communicating outdoor unit.	Y2 relay/Stage 2 failed. (Pilot relay contacts did not close or the relay coil did not energize; no input back to IFC chip.) Critical Alert. Cleared after reset and Y1 input sensed.
E349	No 24 Volts between R & O on "integrated control" with non-communicating outdoor unit (dual fuel model required for heat pump application).	Configuration link R to O needs to be restored. Replace link or hardware. Applicable in non-communicating mode. Critical Alert.
E401	LSOM - Compressor long run cycle or low system pressure.	Compressor ran more that 18 hours to satisfy a single thermostat demand. Critical Alert. Clears the error after 30 consecutive normal run cycles or power reset. Also monitors low pressure switch trips.
E402	LSOM - Outdoor unit system pressure trip.	Discharge or suction pressure out-of-limits, or compressor overloaded. Clears the error after 4 consecutive normal compressor run cycles.
E403	LSOM - Compressor short-cycling (Running less than 4 minutes). Outdoor unit pressure trip.	Compressor runs less than 3 minutes to satisfy a thermostat demand. Clears the error after 4 consecutive normal run cycles or power reset.
E404	LSOM - Compressor rotor locked. Compressor short-cycling. (Running less than 4 minutes.)	Compressor rotor locked up due to run capacitor shore, bearings are seized, excessive liquid refrigeration, etc. Clears the error after 4 consecutive normal run cycles or power reset.
E405	LSOM - Compressor open circuit.	Compressor circuit open (due to power disconnection, open fuse, etc.) Clears the error after 1 normal compressor run cycle.

Integrated Control Diagnostic Codes *(continued)*

Code	Diagnostic Codes / Status of Equipment	Action Required to Clear and Recover
E406	LSOM - Compressor open start circuit.	Required amount of current is not passing through Start current transformer. Clears the error after current is sensed in START sensor, or after power reset.
E407	LSOM - Compressor open run circuit.	Required amount of current is not passing through Run current transformer. Clears the error after current is sensed in RUN sensor, or 1 normal compressor run cycle, or after power reset.
E408	LSOM - Compressor contactor is welded.	Compressor runs continuously. Clears the error after 1 normal compressor run cycle or after power reset.
E409	LSOM - Compressor low voltage.	Secondary voltage is below 18VAC. After 10 minutes, operation is discontinued. Clears the code after voltage is higher than 20VAC for 2 seconds or after power reset.

Program Unit Capacity / Size Mode

Power-Up - Number displayed by integrated control represents unit size code (furnace model and capacity). If three horizontal bars are displayed followed by continuous E203, furnace control does not recognize unit size code. Configure per the following:

Furnace control in IDLE mode (No heating, cooling, or indoor fan operation)

Yes

No

Turn room thermostat to OFF.

To enter **Field Test** mode: Push and hold button next to 7-segment LED display until **solid dash** symbol appears. Release button.

If alarm is present, furnace control will display error code. If alarm is not present, solid dash starts blinking on 7-segment LED display.

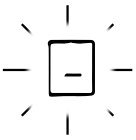

To enter **Program Unit Capacity/ Size** mode: Push and hold button next to 7-segment LED display until solid "P" symbol appears. Release button.

IMPORTANT: Field replacement controls may need to be manually configured to validate furnace unit size code.

Solid P starts blinking on 7-segment LED.

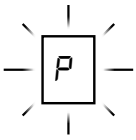

Push and hold button. Integrated control will display unit size code number for each furnace model for three seconds.

UNIT SIZE CODE	FURNACE MODEL
7	A97DSMV070B12S
8	A97DSMV090C12S
9	A97DSMV090C16S
0	A97DSMV090C20S
11	A97DSMV110C20S

When the correct unit size code is displayed, release button. Selected code will flash for 10-second period. During that period, press and hold button for 5 seconds. Integrated control will store code in memory and will automatically exit **Field Test** mode and reset. (If second period expires or button is held less than 5 seconds, control will automatically exit **Field Test** mode and go into **Idle** mode without storing unit size code. If this happens, programming function must be repeated.)

Verify that the selected unit size code is correct and stored in non-volatile memory by cycling the 24 volt power to the furnace control. (At 24 volt power-up of the furnace control, the 7-segment LED will display a unit size code. If three horizontal bars display, the board does not recognize the unit size code. The programming function must be repeated.)

FINISHED

Troubleshooting: Heating Sequence of Operation

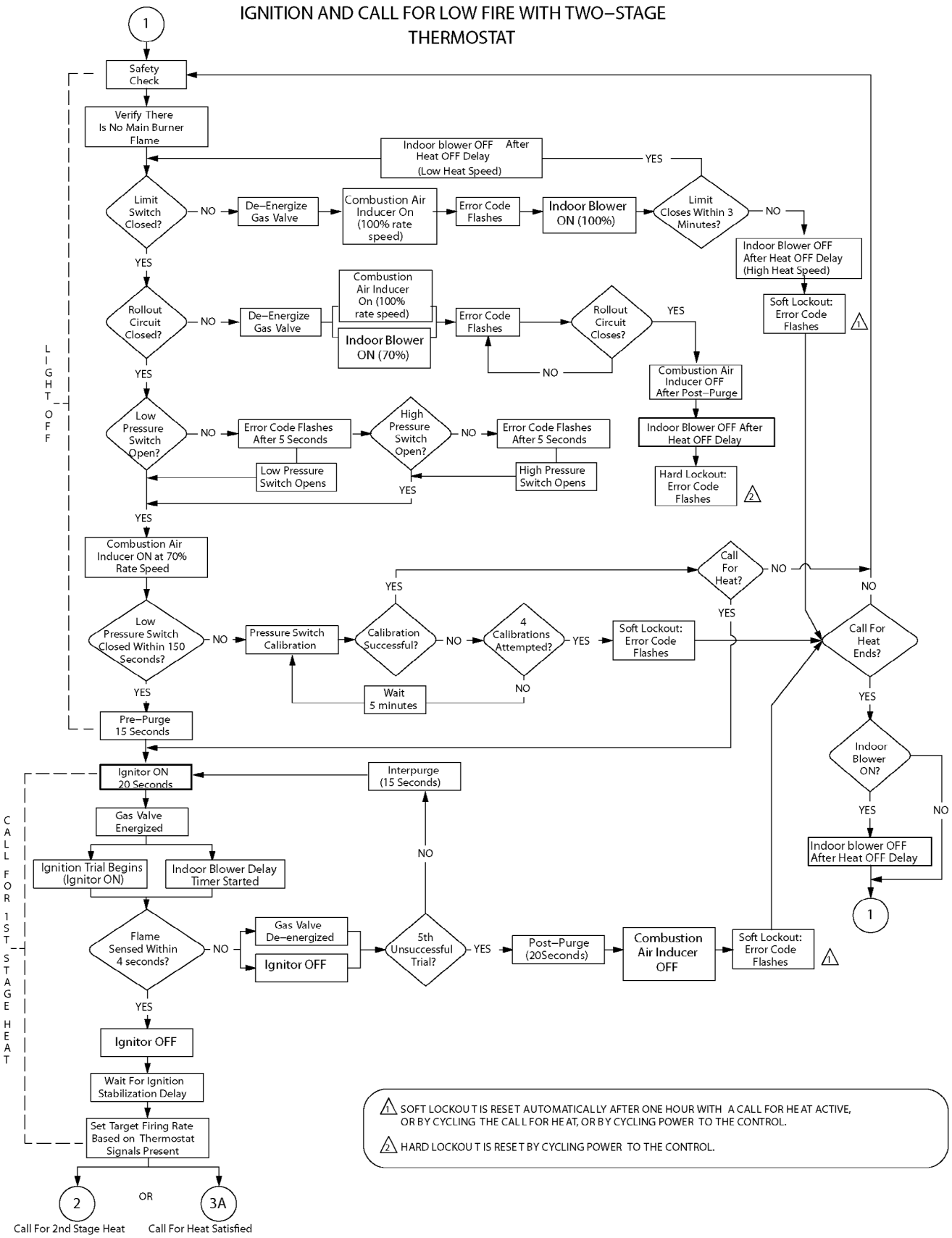

CALL FOR HIGH FIRE WITH TWO–STAGE THERMOSTAT

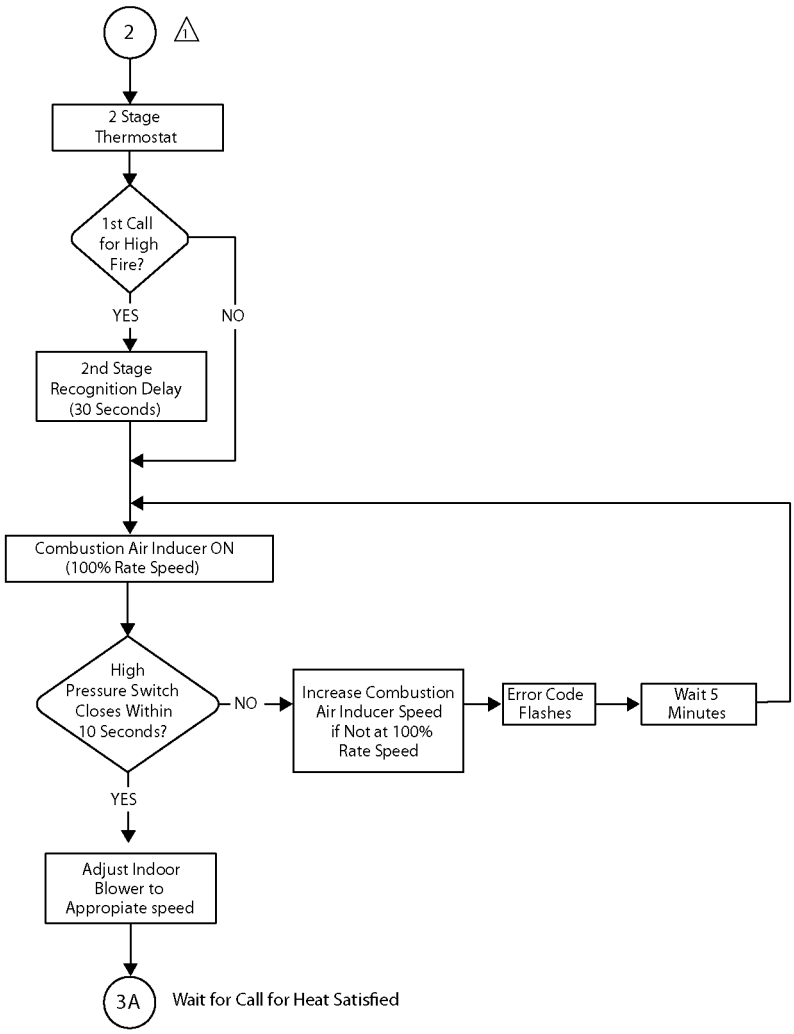

1 System will always light at 70% even if 2nd stage call for heat is in place

2 If the high pressure switch does not close within 5 attempts, the system will operate at low fire for the remainder of the call for heat at request

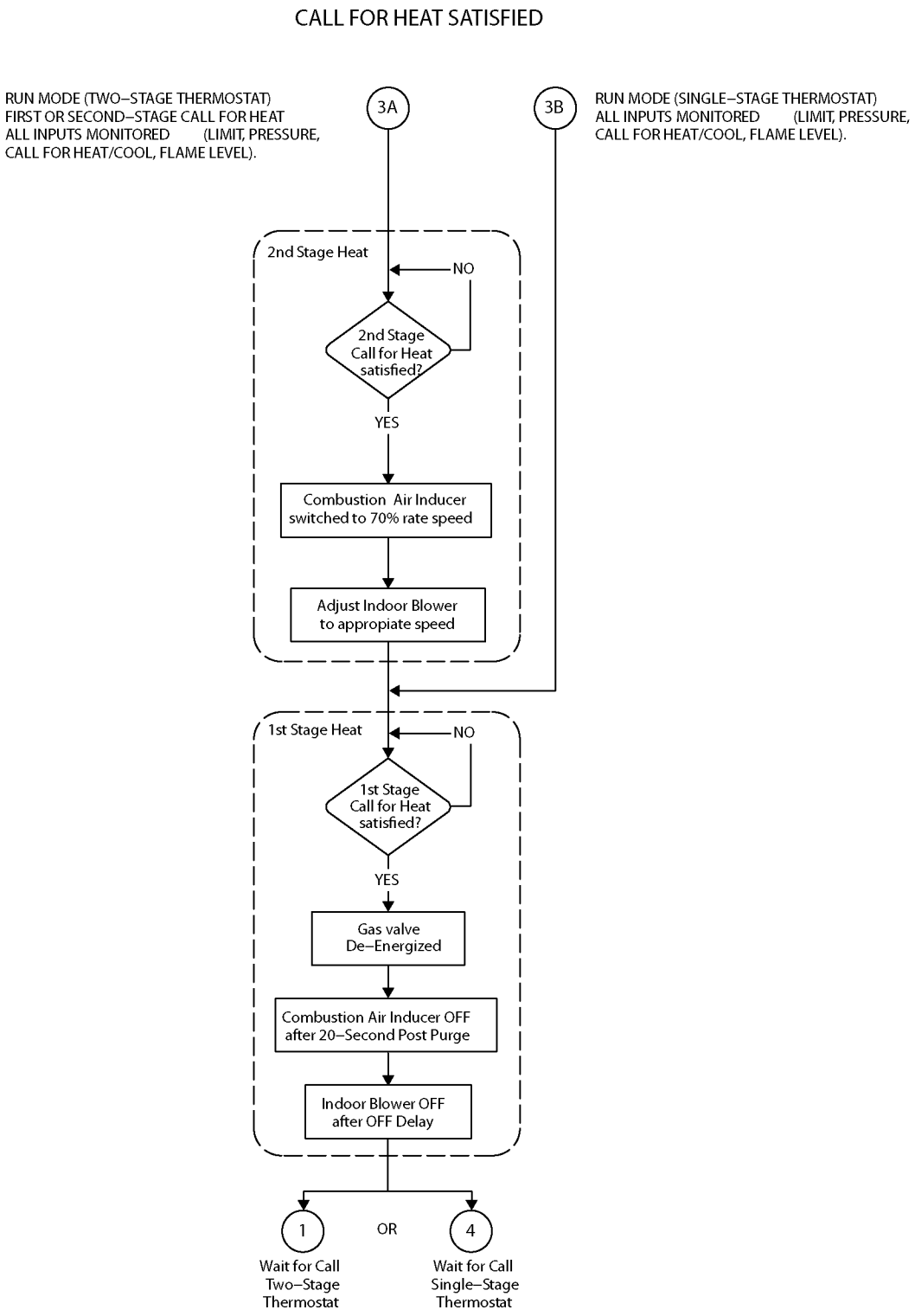
CALL FOR HEAT SATISFIED
RUN MODE (TWO–STAGE THERMOSTAT)
FIRST OR SECOND–STAGE CALL FOR HEAT
ALL INPUTS MONITORED (LIMIT, PRESSURE,
CALL FOR HEAT/COOL, FLAME LEVEL).
3A
3B
RUN MODE (SINGLE–STAGE THERMOSTAT)
ALL INPUTS MONITORED (LIMIT, PRESSURE,
CALL FOR HEAT/COOL, FLAME LEVEL).
2nd Stage Heat
NO
2nd Stage Call for Heat satisfied?
YES
Combustion Air Inducer switched to 70% rate speed
Adjust Indoor Blower to appropiate speed
1st Stage Heat
NO
1st Stage Call for Heat satisfied?
YES
Gas valve De–Energized
Combustion Air Inducer OFF after 20–Second Post Purge
Indoor Blower OFF after OFF Delay
1
OR
4
Wait for Call Two–Stage Thermostat
Wait for Call Single–Stage Thermostat

IGNITION AND CALL FOR HEAT WITH SINGLE–STAGE THERMOSTAT

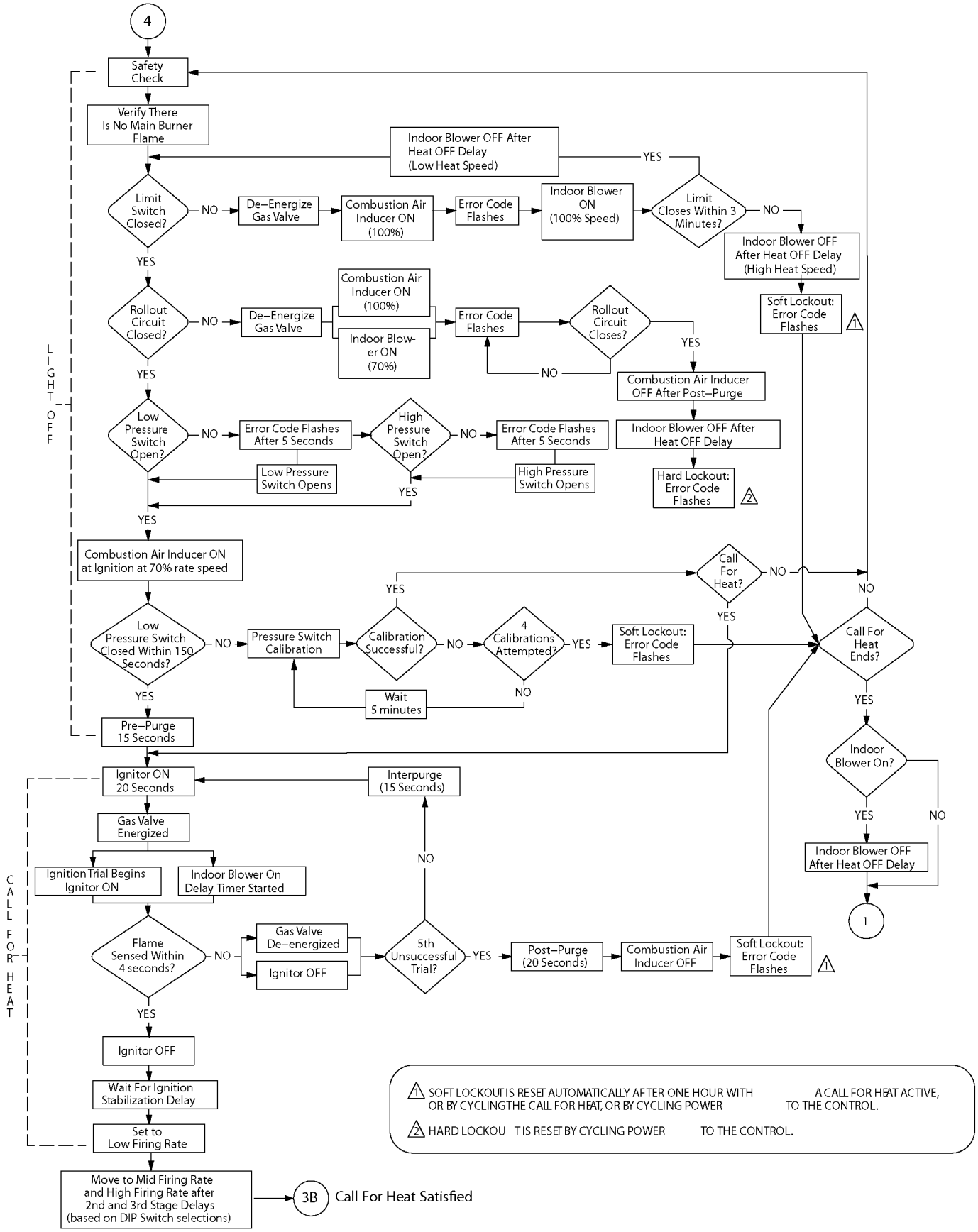

Troubleshooting: Cooling Sequence of Operation

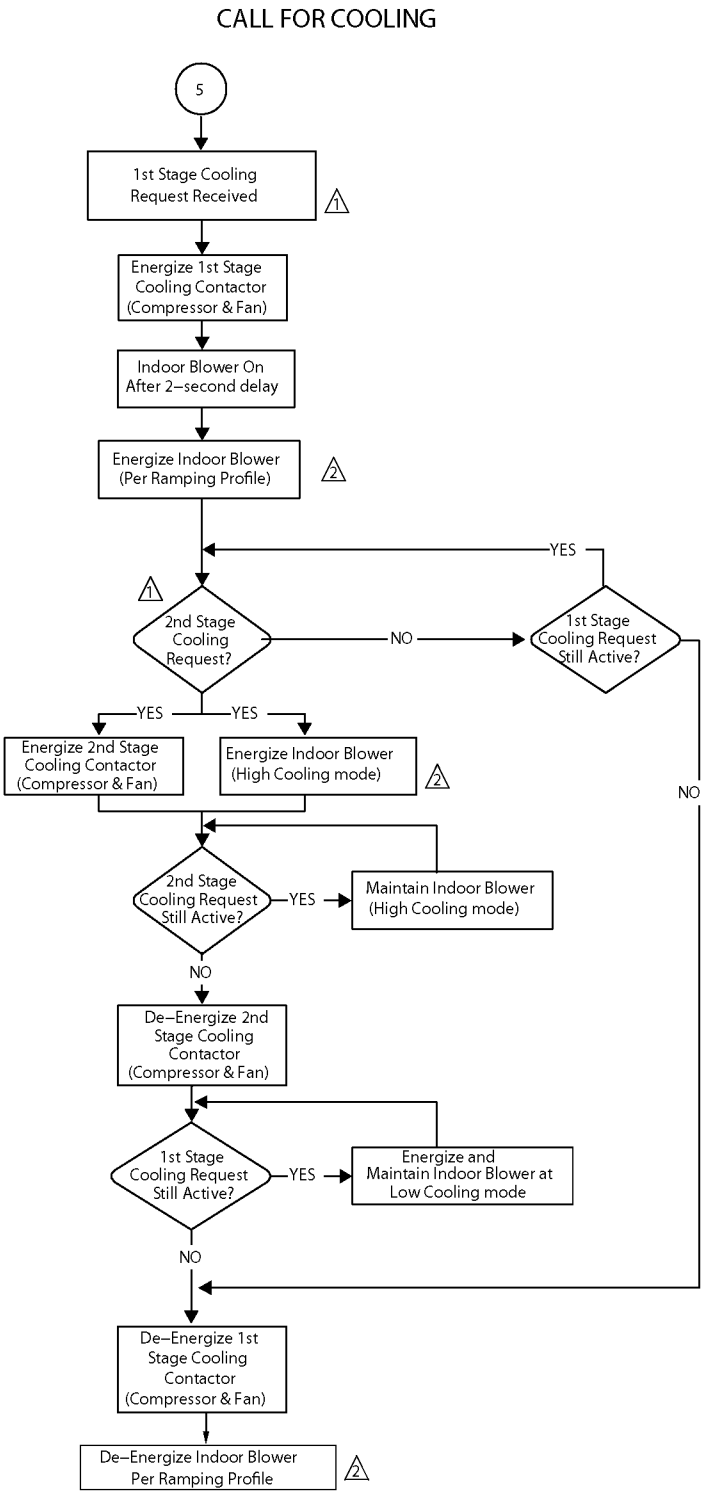

1 2nd stage cooling operation requires a 2–stage thermostat, a 2–stage cooling system and on–board link W915 must be be cut. The control will not respond to a 2nd stage cooling request unless a 1st stage cooling request is active

2 Indoor blower cooling mode and high cooling mode have a specific ON, OFF and speed ramping profiles. The specific profile is selected using the DIP switches on the control.

Troubleshooting: Continuous Fan Sequence of Operation

CONTINUOUS LOW SPEED INDOOR BLOWER SEQUENCE OF OPERATION

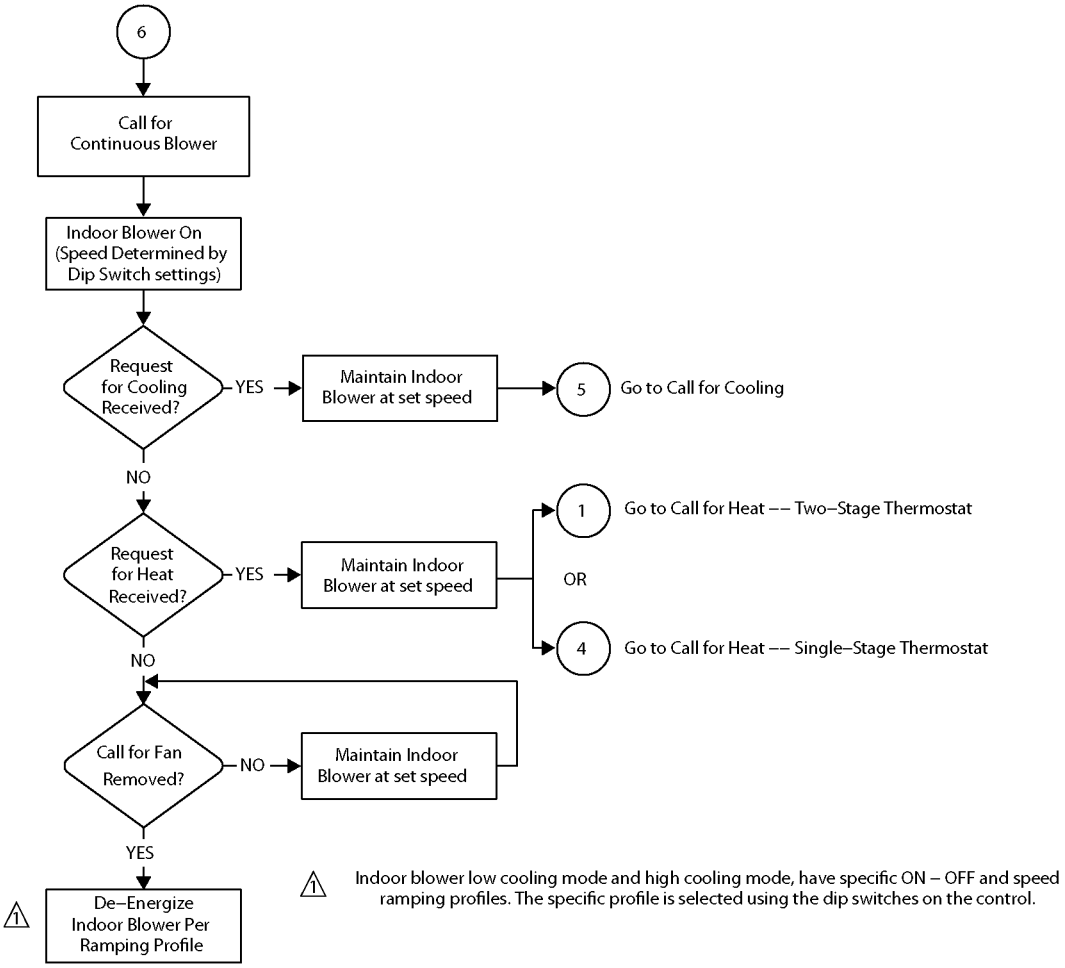

Requirements for Commonwealth of Massachusetts

Modifications to NFPA-54, Chapter 10

Revise NFPA-54 section 10.8.3 to add the following requirements:
For all side wall, horizontally vented, gas-fueled equipment installed in every dwelling, building or structure used in whole or in part for residential purposes, including those owned or operated by the Commonwealth and where the side wall exhaust vent termination is less than seven (7) feet above the finished grade in the area of the venting, including but not limited to decks and porches, the following requirements shall be satisfied:

1. **INSTALLATION OF CARBON MONOXIDE DETECTORS**. At the time of installation of the side wall, horizontally vented, gas-fueled equipment, the installing plumber or gas fitter shall observe that a hard-wired carbon monoxide detector with an alarm and battery backup is installed on the floor level where the gas equipment is to be installed. In addition, the installing plumber or gas fitter shall observe that a battery-operated or hard-wired carbon monoxide detector with an alarm is installed on each additional level of the dwelling, building or structure served by the side wall, horizontally vented, gas-fueled equipment. It shall be the responsibility of the property owner to secure the services of qualified licensed professionals for the installation of hard-wired carbon monoxide detectors.
   a. In the event that the side wall, horizontally vented, gas-fueled equipment is installed in a crawl space or an attic, the hard-wired carbon monoxide detector with alarm and battery backup may be installed on the next adjacent floor level.
   b. In the event that the requirements of this subdivision cannot be met at the time of completion of installation, the owner shall have a period of thirty (30) days to comply with the above requirements; provided, however, that during said thirty (30) day period, a battery-operated carbon monoxide detector with an alarm shall be installed.
2. **APPROVED CARBON MONOXIDE DETECTORS**. Each carbon monoxide detector as required in accordance with the above provisions shall comply with NFPA 720 and be ANSI/UL 2034 listed and IAS certified.
3. **SIGNAGE**. A metal or plastic identification plate shall be permanently mounted to the exterior of the building at a minimum height of eight (8) feet above grade directly in line with the exhaust vent terminal for the horizontally vented, gas-fueled heating appliance or equipment. The sign shall read, in print size no less than one-half (1/2) inch in size, **"GAS VENT DIRECTLY BELOW. KEEP CLEAR OF ALL OBSTRUCTIONS."**
4. **INSPECTION**. The state or local gas inspector of the side wall, horizontally vented, gas-fueled equipment shall not approve the installation unless, upon inspection, the inspector observes carbon monoxide detectors and signage installed in accordance with the provisions of 248 CMR 5.08(2)(a) 1 through 4.

EXEMPTIONS: The following equipment is exempt from 24 CMR 5.08(2)(a) 1 through 4:

1. The equipment listed in Chapter 10 entitled "Equipment Not Required to Be Vented" in the most current edition of NFPA 54 as adopted by the Board; and
2. Product Approved side wall, horizontally vented, gas-fueled equipment installed in a room or structure separate from the dwelling, building or structure used in whole or in part for residential purposes.

MANUFACTURER REQUIREMENTS - GAS EQUIPMENT VENTING SYSTEM PROVIDED.

When the manufacturer of Product Approved side wall, horizontally vented, gas-fueled equipment provides a venting system design or venting system components with the equipment, the instructions provided by the manufacturer for installation of the equipment and the venting system shall include:

1. Detailed instructions for the installation of the venting system design or the venting system components: and
2. A complete parts list for the venting system design or venting system.

MANUFACTURER REQUIREMENTS - GAS EQUIPMENT VENTING SYSTEM NOT PROVIDED.

When the manufacturer of Product Approved sidewall, horizontally vented, gas-fueled equipment does not provide the parts for venting the flue gases, but identifies "special venting systems," the following requirements shall be satisfied by the manufacturer:

1. The referenced "special venting system" instructions shall be included with the appliance or equipment installation instructions; and
2. The "special venting systems" shall be Product Approved by the Board, and the instructions for that system shall include a parts list and detailed installation instructions.

A copy of all installation instructions for all Product Approved side wall, horizontally vented, gas-fueled equipment, all venting instructions, all parts lists for venting instructions, and/or all venting design instructions shall remain with the appliance or equipment at the completion of the installation.