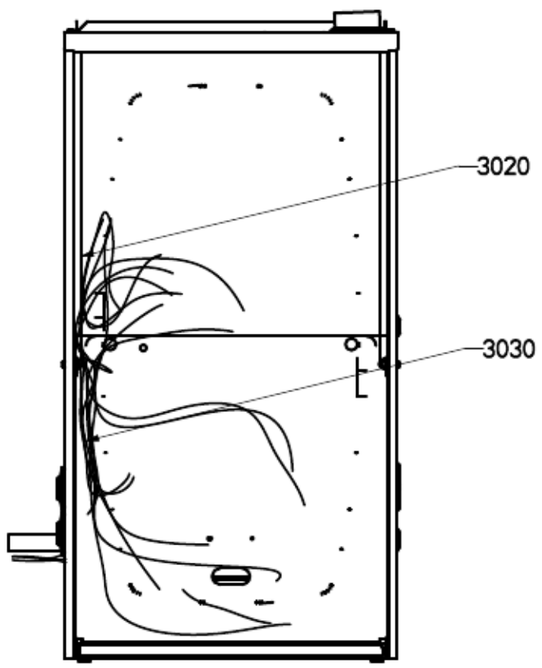

WIRE ROUTING

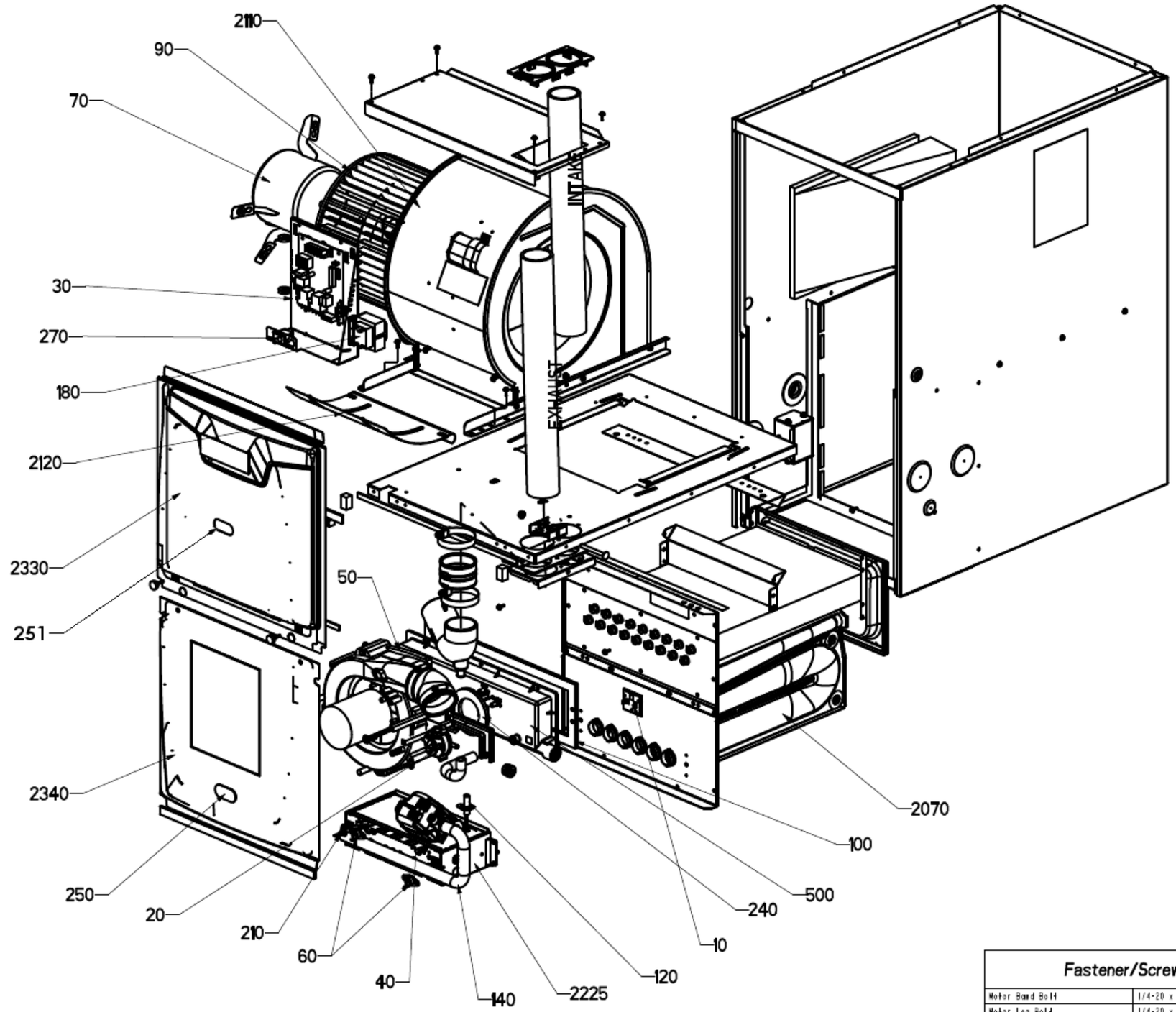

Fastener/Screw Legend	
Motor Band Bolt	1/4-20 x 1.50 Grade 5 or Higher
Motor Leg Bolt	1/4-20 x 1.25 w/washer, Thread Forming
Inducer Screws	#10-16 x 1.75 Special Plastic
Heat Ex/Transition Box Screws	#8 x .50 410S.S. Heat Treat
Header Box/Endplate Screws	#10 x .63 Type AB S.M.
Standard Cabinet Screws	#10 x .50 Type AB S.M.

95G2DF-SERIES