Job Name:

System Reference: Date:

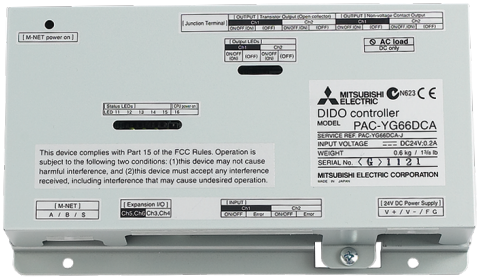

3. System remote controller

CONTROLLER

3-11. DIDO controller [PAC-YG66DCA]

The DIDO controller is used in combination with a TE-200A/TE-50A/AG-150A-A/TW-50A/EB-50GU-A to operate general-purpose equipment, as well as to monitor operating and error status. It is equipped with two sets of standard terminals (Channels 1 and 2), and four sets of expansion connectors for the input/output terminals. Expansion cable is optional.

Operation can be monitored or performed from the AG-150A-A LCD.
In addition, this device includes a function that interlocks M-NET devices such as indoor units, general equipment, etc.

■External Dimensions

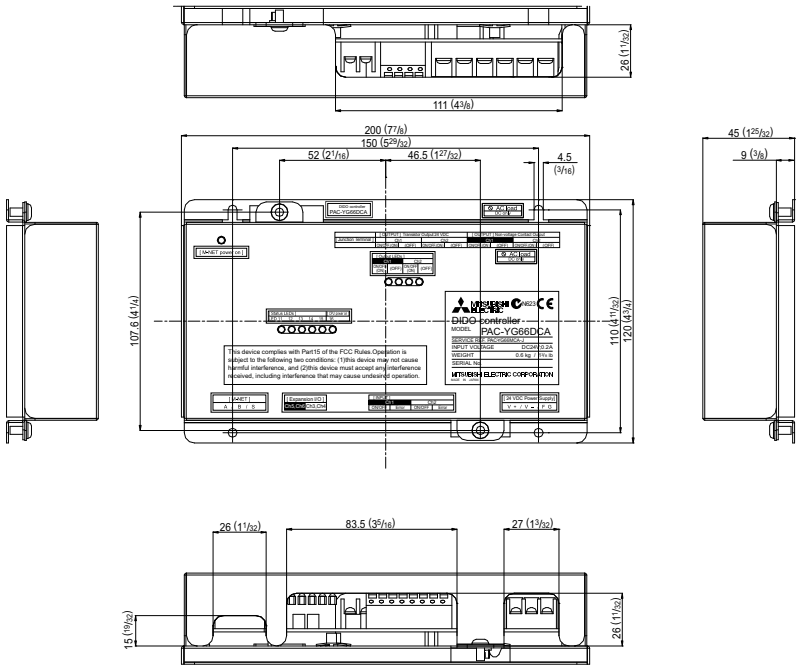

Unit: mm (in)

⚠CAUTION

Usage Restrictions

- Mitsubishi Electric does not take financial responsibility for damages caused by issues beyond our control or special circumstances (predicable or unpredictable); and secondary or accidental damages, and damages to other objects. We also do not take financial responsibility for opportunities lost as a result of device failure, or electrical power failure at the end-user site.
  Mitsubishi Electric does not take financial responsibility caused by end-users' requests including, but not limited to, device testing, startup, readjustment, and replacement.
- Do not use this device in disaster prevention, security, or "critical to life" applications.
- It is recommended to provide an external switch for general-purpose equipment in case of a failure of the DIDO controller or a peripheral part.

© 2020 Mitsubishi Electric Trane HVAC US LLC. All rights reserved.

3. System remote controller

1. Specifications

(1). Device Specifications

Item	Rating and Specification					
Power Supply	24 VDC ±10%: 5 W (*1)					Screw terminal block (M3) (*8)
Interface	M-NET communication			17 to 30 VDC (*2)		Screw terminal block (M3) (*8)
	Standard	Output (*3)	ON/OFF, (ON) (*4)	Non-voltage Relay contact (2)	Applied load MAX: 24 VDC, 5 W MIN: 5 VDC, 2 mW * AC loads cannot be connected.	Screw terminal block (M3.5) (*8)
				Transistor (2)	24 VDC 40 mA or less (*5)	Screwless terminal block
			(OFF) (*4)	Non-voltage Relay contact (2)	Applied load MAX: 24 VDC, 5 W MIN: 5 VDC, 2 mW * AC loads cannot be connected.	Screw terminal block (M3.5) (*8)
				Transistor (2)	24 VDC 40 mA or less (*5)	Screwless terminal block
		Input	ON/OFF	Non-voltage a contact (2 each)	24 VDC 1 mA or less (*6)	Screwless terminal block
			Error/Normal			
	Expansion	Output	ON/OFF, (ON) (*4)	Transistor (4 each)	24 VDC 40 mA or less (*5)	9 pin connector
			(OFF) (*4)			
		Input	ON/OFF	24 VDC input (4 each)	24 VDC 1 mA or less (*7)	9 pin connector
			Error/Normal			
	Output Pulse Width			1s ± 30 ms 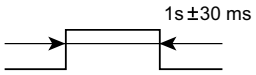		
Interlock Function	Interlock M-NET devices and output contacts according to status of input contacts. (*8)					
Environment Conditions	Temperature			Operating temperature range	0 to 40°C[32°F to 104°F]	
				Storage temperature range	-20 to 60°C[-4°F to 140°F]	
	Humidity			30 to 90%RH (no condensation)		
Dimensions	200 (W) × 120 (H) × 45 (D) mm / 7 7/8 (W) × 4 3/4 (H) × 1 25/32 (D) in					
Weight	0.6 kg / 1 3/8 lbs					
Time Backup During Power Failure	In the event of power failure or shut-off, the internal capacitor will continue to track time for approximately one week. (The internal capacitor takes about 24 hours to fully charge; a replacement battery is not necessary.)					
Installation Environment	Inside the metal control board (indoors) * Use this product in a hotel, a business office environment or similar environment.					

*1: For details, refer to "1-(2). Parts Purchased Separately".
*2: Supply electric power from a power unit for the transmission line or an outdoor unit.
Furthermore, the power consumption factor of the M-NET circuitry of this device is "1/4".
*3: Non-voltage Relay contact or transistor is available for output. Only one can be used at a time.
*4: ( ) is in the case of a pulse.
*5: The output is open collector type. Power must be supplied from an external power source to the output circuit of this device.
*6: Power is supplied from this device to the external contacts.
*7: Power must be supplied from an external power source.
*8: M3 and M3.5 are sizes of the screw on the terminal block (ISO metric screw thread).
The number indicates the screw diameter (mm).

© 2020 Mitsubishi Electric Trane HVAC US LLC. All rights reserved.

3. System remote controller

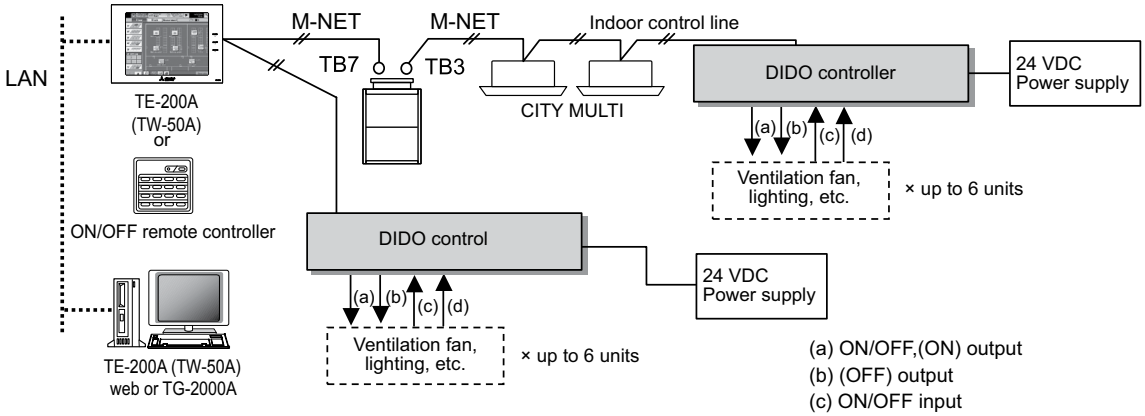

*This figure omits the power supply line and only shows the transmission line.

(a) ON/OFF,(ON) output
(b) (OFF) output
(c) ON/OFF input
(d) Error/Normal input
Standard: Terminal block (for 2 units)
Expansion: Connectors (for 4 units)
Total: 6 units

<Restrictions>
Maximum of 50 units (50 channels) per TE-200A/TE-50A/TW-50A/AG-150A-A/EB-50GU-A
However, the number of units that can be connected to a TE-200A/TE-50A/TW-50A/AG-150A-A/EB-50GU-A is up to 50 including the number of contacts used on this device, an indoor unit, Lossnay unit, etc.
Up to 6 contacts can be connected to the DIDO controller (1 M-NET address). One contact connected to this device is calculated as the equivalent of one indoor unit connected to TE-200A/TE-50A/TW-50A/AG-150A-A/EB-50GU-A.
For example, 5 contacts connected to the DIDO controller are calculated as the equivalent of 5 indoor units connected to TE-200A/TE-50A/TW-50A/AG-150A-A/EB-50GU-A.

NOTE

- For the shield ground of the M-NET centralized control line, use single-point grounding at the power unit for the transmission line.
  However, when supplying electric power to the M-NET centralized control line from the R410A-Series outdoor unit*1 without using a power supply unit for the transmission line, use single-point grounding at the TB7 of that outdoor unit. *1: Except PUMY model and PUHY/PURY-T(S)LMU/T(S)KMU model (Y/R2/H2i R2-Series)
  Furthermore, when connecting this device to the M-NET indoor control line, use grounding at the TB3 for each outdoor unit system.
- If the M-NET transmission line of this device is connected to the M-NET indoor control line and the outdoor unit is down because, for example, the power supply is interrupted for servicing or there is a failure, the DIDO controller cannot be controlled from the system controller.
- Controlling the ON/OFF remote controller is only possible with channel 1 of a standard terminal block.
- When TE-200A/TE-50A/TW-50A/AG-150A-A/EB-50GU-A is connected, monitoring control can only be performed from TE-200A/TE-50A/TW-50A/AG-150A-A/EB-50GU-A or TG-2000A. Monitoring control cannot be performed from the ON/OFF remote controller.

© 2020 Mitsubishi Electric Trane HVAC US LLC. All rights reserved.

3. System remote controller

(2). Parts Purchased Separately

Prepare the following parts to install this device.

Required Part	Specification
Unit fixing screws	M4 screw × 4 (*M4: ISO metric screw thread)
Power supply for this device	Commercially available power source: 24 VDC±10% 0.2 A (Minimum loading), SELV circuit, power line with grounding terminal Ripple noise: Lower than 200 mVp-p Compatible specification Authorized or CE marked products Subject to regulations: - IEC60950 (or EN60950) - CISPR22/24 (or EN55022/24) - IEC61000-3-2/3-3 (or EN61000-3-2/3-3) When using transistor output (including extension output) for the 24 VDC output of this device, increase the capacity to match the number used. • 1 set used: 0.3 ADC (Minimum) • 2 sets used: 0.4 ADC (Minimum) • 3 sets used: 0.5 ADC (Minimum) • 4 sets used: 0.6 ADC (Minimum) • 5 sets used: 0.7 ADC (Minimum) • 6 sets used: 0.8 ADC (Minimum) * The increase of the power supply capacity is 0.1 ADC for every set.
Power line	Use a sheathed vinyl cord or cable. At least 0.75 mm^2 (AWG18)
M-NET transmission line	Type of the cable: Sheathed vinyl cords or cable which comply with the following specifications or equivalent. • CPEV ø1.2 mm to ø1.6 mm • CVVS 1.25 mm^2 to 2 mm^2 (AWG 16 to 14) * CPEV: PE insulated PVC sheathed shielded communication cable * CVVS: PVC insulated PVC sheathed shielded control cable PE: Polyethylene PVC: Polyvinyl choloride Power needs to be supplied to the M-NET circuitry of this device. Use an outdoor unit or a separately purchased power supply unit for the transmission line.
Signal lines	Use electric wire of an appropriate size for the terminal block of this device. Electric wire size ···· (1) Solid wire: ø0.65 mm (AWG21) - ø1.2 mm (AWG16) (2) Stranded wire: 0.75 mm^2 (AWG18) - 1.25 mm^2 (AWG16) Single strand: At least ø0.18 mm To use an expansion input/output, use a separately purchased external input/output adapter.

[Parts to be Purchased Separately]

Name	Model	Application	Remark
Power supply unit	PAC-SC51KUA	Power supply to the M-NET transmission line	This is not required when power is to be supplied from an outdoor unit.
External I/O adapter	PAC-YG10HA-E	Connection adapter for using an expansion input/output	This is required when an expansion input/output is used.

[Commercially available parts]

Name	Application	Remark
External 24 VDC power source	Supplies power when to use the DIDO controller or transistor output.	Refer to "Power supply for this device" in "Required Part" above for the power supply capacity.
Relay device	Requires commercially available relay device depending on the electric specifications with an external device.	

© 2020 Mitsubishi Electric Trane HVAC US LLC. All rights reserved.

3. System remote controller

3. Interlock control

The DIDO controller (PAC-YG66DCA) has an interlock control function, which enables operation or set temperature change on the M-NET devices such as indoor units and also enables signal output to the contacts on the DIDO controller.
Interlock control covers the units connected to the DIDO controller with M-NET system.
TE-200A/TE-50A/AG-150A-A/TW-50A/EB-50GU-A must be connected to use the function.
Ask your dealer for interlock control setting. The setting requires special tool support.

⚠CAUTION	Before using the interlock control, you must agree to the following. 1.This feature must not be used for disaster prevention or security purpose. (Not designed to be used in situations that are life-threatening) 2.No functions must be added that allow the malfunctioning unit to run by defeating the safety features, such as an external ON/OFF switch or a short-circuit. 3.Those settings for the function that are not supported by the interlocked units must not be made. All the settings must be made within the specified range. (Failure to observe these precautions may result in malfunctions and failures.) 4.Perform a test run for interlock control, and confirm the correct settings and normal operation. 5.The system must be configured in the way that integrates the operation of the interlocked fire and emergency control systems.

Item	Content	Remarks
Number of events	24 events	1 event interlock with 1 unit
Determinant condition for interlock control	At input contact change	• Operation input ON/OFF • Error input Error/Normal
Interlock control contents (to be output)	1 action for 1 condition • ON/OFF operation of indoor units • Operation mode change of indoor units • Temperature setting of indoor units (*1) • Contact output to DIDO controller (*2)	Interlock control covers the units connected to DIDO controllers with M-NET system. (*1) Temperature setting range: 19-28ºC (Standard setting) (*2) DIDO controller itself or other DIDO controllers in the same M-NET system.
Other	Interlock control prohibition function is enabled at emergency stop from TE-200A/ TE-50A/AG-150A-A/TW-50A/EB-50GU-A	

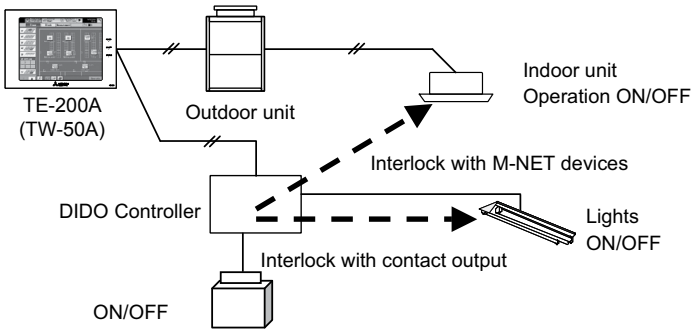

Interlock control of DIDO controller (example)

Note: Do not use Interlock control function on both TE-200A/TE-50A/AG-150A-A/TW-50A/EB-50GU-A and DIDO controller at the same time.

Specifications are subject to change without notice.

© 2020 Mitsubishi Electric Trane HVAC US LLC. All rights reserved.