CITYMULTI®

PAC-YG60MCA-J
PI CONTROLLER

TRANE

MITSUBISHI ELECTRIC

Job Name:

System Reference: Date:

The PI controller counts pulses from a power meter, gas meter, water meter, and calorimeter.

Combining the use of the TE-200A/TE-50A/AG-150A-A/TW-50A/EB-50GU-A and TG-2000A allows for calculating the charges for each unit and performing peak-cut (e.g., demand control) operation.

The meters can be monitored on AG-150A-A LCD

SPECIFICATIONS

Item	Rating and Specification			
Power Supply	24 VDC ±10%: 5 W			Screw terminal block (M3) (*3)
Interface	M-NET communication	17 to 30 VDC (*1)		Screw terminal block (M3) (*3)
	Non-voltage a-contact input	Number of contacts: 4 Pulse signal: a-contact Pulse width: 100 ms to 300 ms (Idle period until next pulse: 100 ms or more) 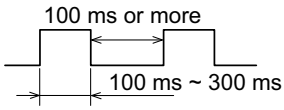 Rated voltage: 24 VDC Rated current: 1 mA or less (*2)		Screwless terminal block
Environment Conditions	Temperature	Operating temperature range	0 to 40°C [32°F to 104°F]	
		Storage temperature range	-20 to 60°C [-4°F to 140°F]	
	Humidity	30 to 90%RH (no condensation)		
Dimensions	200 (W) × 120 (H) × 45 (D) mm / 7 7/8 (W) × 4 3/4 (H) × 1 25/32 (D) in			
Weight	0.6 kg / 1 3/8 lb			
Time Backup During Power Failure	In the event of power failure or shut-off, the internal capacitor will continue to track time for approximately one week. (The internal capacitor takes about 24 hours to fully charge; a replacement battery is not necessary.)			
Installation Environment	Inside the metal control board (indoors) * Use this product in a hotel, a business office environment or similar environment.			

*1: Supply electric power from a power unit for the transmission line or an outdoor unit. Furthermore, the power consumption factor of the M-NET circuitry of this device is"1/4".

*2: Supply electric power from the main unit to the contacts of the meters.

*3: M3 is the size of the screw on the terminal block (ISO metric screw thread). The number indicates the screw diameter (mm).

Specifications are subject to change without notice.

© 2020 Mitsubishi Electric Trane HVAC US LLC. All rights reserved.

PAC-YG60MCA-J

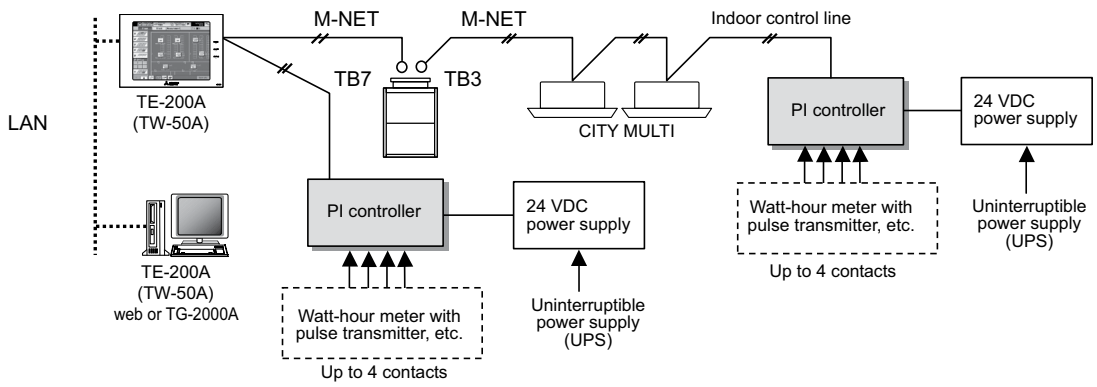

*This figure omits the power supply line and only shows the transmission line.

<Restrictions>

Although the maximum settable total number of built-in PI controllers and PI controllers (PAC-YG60MCA) for each TE-200A/TE-50A/TW-50A is 15, the number of them in a system with connection to one or more TE-50A/TW-50A controllers must be 20 or less. (Each built-in PI controllers counts as one unit.)
Maximum of 15 units (total 60 channels) per EB-50GU-A/AG-150A-A (Expansion controller) ver. 2.45 or later
However, the number of units that can be connected to one TE-200A/TE-50A/TW-50A/AG-150A-A/EB-50GU-A is up to 50 including this device, indoor units, Lossnay units, etc.

NOTE:

- For the shield ground of the M-NET centralized control line for central control, use single-point grounding at the power unit for the transmission line. However, when supplying electric power to the M-NET centralized control line from the R410A-Series outdoor unit*1 without using a power supply unit for the transmission line, use single-point grounding at the TB7 of that outdoor unit. *1 : Except PUMY model and PUHY/PURY-TLMU/TKMU model (Y/R2/H2i R2-Series). Furthermore, when connecting this device to the M-NET indoor control line, use grounding at the TB3 for each outdoor unit system.
- Connecting an Uninterruptible power supply (UPS) to the 24 VDC power supply is recommended in order to prevent the loss of pulse data in the event of a power failure. If a UPS cannot be connected, try to make the AC power supply to the 24 VDC power supply as much same as the AC power supply line to the meters.
- This device does not support level meters. To use a level meter, incorporate a Converter circuit externally and convert to pulse input.
- If the M-NET transmission line of this device is connected to an M-NET indoor control line and the outdoor unit is down because, for example, the power supply is interrupted for ervicing or there is a failure, the PI controller cannot be controlled from the system controller.

PARTS PURCHASED SEPARATELY

Prepare the following parts to install this device.

Required Part	Specification
Unit fixing screws	M4 screw × 4 (* M4: ISO metric screw thread)
Power supply for this device	Power source: 24 VDC 0.2 A (Minimum loading), SELV circuit, power line with grounding terminal Ripple noise: Lower than 200 mVp-p Compatible specification Authorized or CE marked products Subject to regulations: - IEC60950 (or EN60950) - CISPR22/24 (or EN55022/24) - IEC61000-3-2/3-3 (or EN61000-3-2/3-3)
Power line	Use a sheathed vinyl cord or cable. At least 0.75 mm^2 (AWG18)
M-NET transmission line	Type of the cable: Sheathed vinyl cords or cable which comply with the following specifications or equivalent. • CPEV ø1.2 mm to ø1.6 mm • CVVS 1.25 mm^2 to 2 mm^2 (AWG16 to 14) * CPEV: PE insulated PVC sheathed shielded communication cable * CVVS: PVC insulated PVC sheathed shielded control cable PE: Polyethylene PVC: Polyvinyl choloride Power needs to be supplied to the M-NET circuitry of this device. Use an outdoor unit or a separately purchased power supply unit for the transmission line.
Signal lines	Shows the size of the electric wire (copper wire) that is adapted to the terminal block of this device. Electric wire size..... (1)Solid wire: ø0.65 mm (AWG21) - ø1.2 mm (AWG16) (2)Stranded wire: 0.75 mm^2 (AWG18) - 1.25 mm^2 (AWG16) Single strand: At least ø0.18 mm

Specifications are subject to change without notice.

© 2020 Mitsubishi Electric Trane HVAC US LLC. All rights reserved.

PARTS PURCHASED SEPARATELY

Name	Model	Application	Remark
Power supply unit	PAC-SC51KUA	Power supply to the M-NET transmission line	This is not required when power is to be supplied from an outdoor unit.

[Commercially available parts]

Part	Use	Remark
External 24 VDC power source	Supplies power to the PI controller.	Refer to "Power supply for this device" in "Required Part" above for the capacity of the power supply.

[Recommended Pulse Specifications]

Prepare a measuring instrument that measures the type of pulse signals indicated in table below.

Type	Specification
Output pulse relay method	Semiconductor relay method
Output pulse width	100 ~ 300 ms (100 ms and above) Choose an instrument that outputs non-voltage a-contact point pulse per each pulse output. 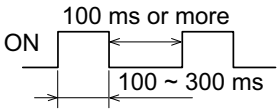
Pulse unit	Watt-hour meter: 0.1 kWh/pulse, 1 kWh/pulse recommended Water meter: m^3/pulse Gas meter: m^3/pulse Calorimeter: MJ/pulse * Except for the watt-hour meter, select instruments that take measurements in the appropriate pulse unit.

WIRING INSTRUCTIONS

(1). Connecting the Power and M-NET Transmission Lines

Tightening torque for terminal screws: 1 N·m

Connect the M-NET transmission line of this device to a power supply unit (PAC-SC51KUA) for the transmission line or an outdoor unit (either a centralized control line or indoor control line can be connected).
* Only the M-NET circuitry of this device receives the power from the M-NET transmission line. The power consumption factor is "1/4".

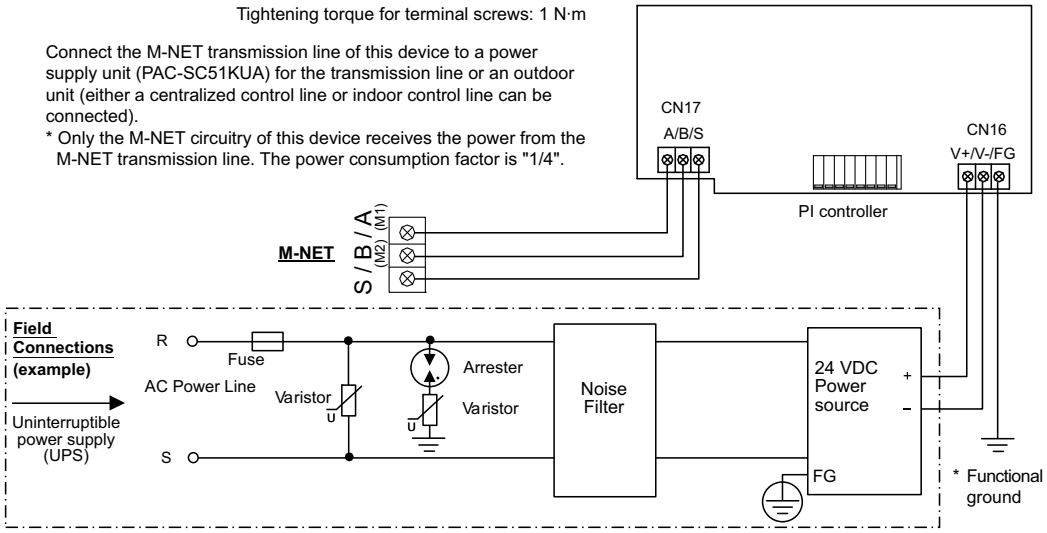

⚠CAUTION

- Use a power line and M-NET transmission line that satisfy the specifications described in "1-(2). Parts Purchased Separately".
- Attach a circuit comprising the following components to the supply primary side of the 24 VDC power supply.
  (1) Varistor, (2) Arrester, (3) Noise filter, (4) Fuse
- It is important to pay attention to the polarity when connecting to the 24 VDC power supply terminal block. Connecting the positive and negative in the reverse order will cause a failure.
- Fix the power line and M-NET transmission line in place on the outside to ensure that the terminal block is not affected by any external force.
  Not securely connecting and fixing the wires in place may cause heat generation and fire.
- Make sure that the copper wiring is not short-circuiting the plates (cover, lower case) or neighboring wires. Cover the shielded line of the M-NET transmission line with materials such as vinyl tape and prevent short-circuiting with the plates.

© 2020 Mitsubishi Electric Trane HVAC US LLC. All rights reserved.

PAC-YG60MCA-J

EXTERNAL DIMENSIONS

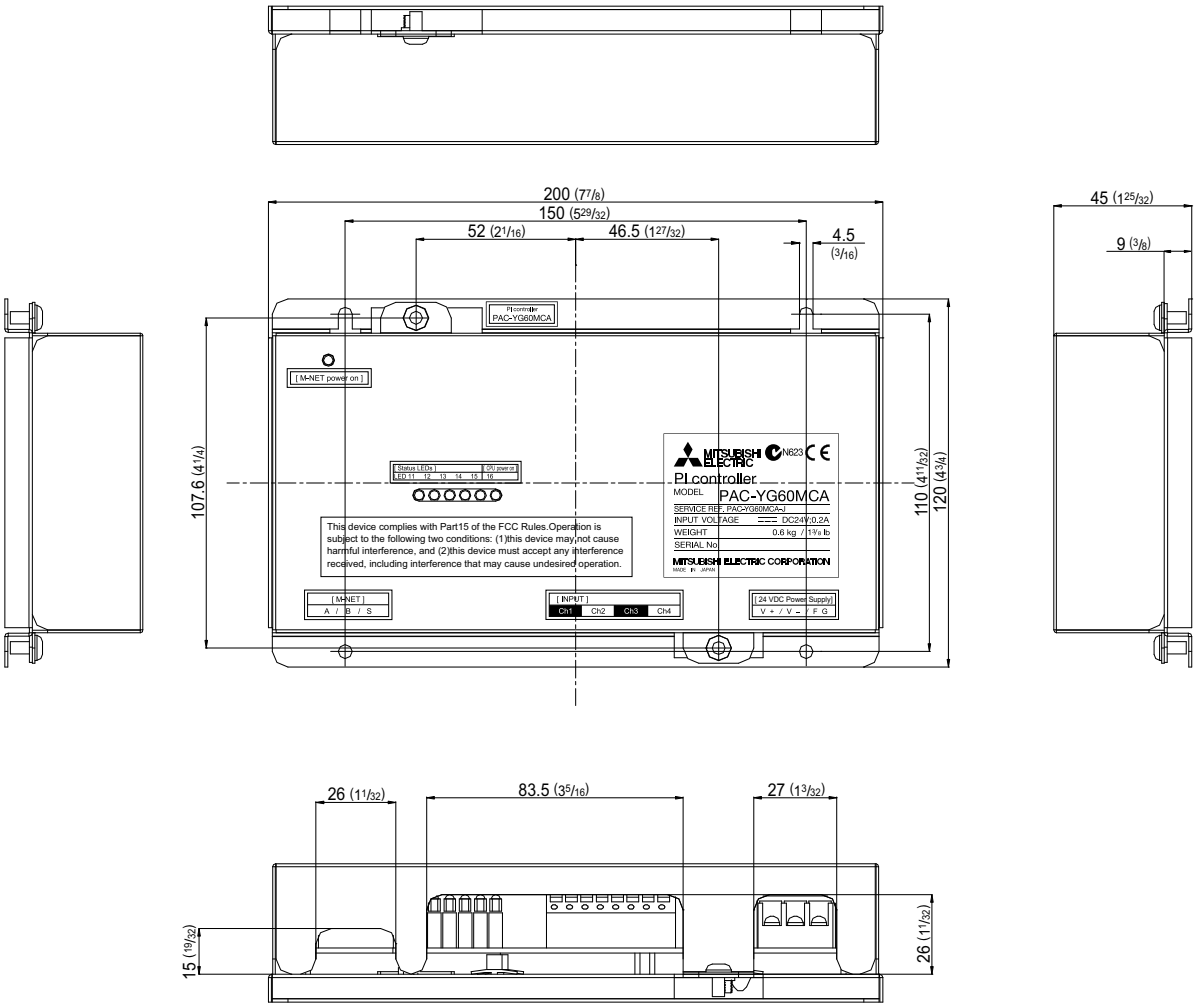

Unit: mm (in)

CAUTION - USAGE RESTRICTIONS:

- Mitsubishi Electric does not take financial responsibility for damages caused by issues beyond our control or special circumstances (predicable or unpredictable); and secondary or accidental damages, and damages to other objects. We also do not take financial responsibility for opportunities lost as a result of device failure, or electrical power failure at the end-user site. Mitsubishi Electric does not take financial responsibility caused by end-users' requests including, but not limited to, device testing, startup, readjustment, and replacement.
- Because the PI controller only counts pulses, accuracy and performance of pulse conversion depend on the meter. Mitsubishi Electric does not take financial responsibility for damages caused by issues beyond our control or special circumstances (predicable or unpredictable); and secondary or accidental damages and damages to other object.
- Depending on each country's laws and regulations, etc., there may be cases these measured charges cannot be used for certificate of transaction.

Specifications are subject to change without notice.

© 2020 Mitsubishi Electric Trane HVAC US LLC. All rights reserved.