American Standard®
HEATING & AIR CONDITIONING

MITSUBISHI ELECTRIC

Air Conditioners

NAXAMT12, 18, 24, 30, 36A112AA

SERVICE PARTS MANUAL

Table of Contents

1. EXTERNAL PARTS 3
2. HEX ASSEMBLY PARTS 4
3. BLOWER PARTS 5
4. CONTROL BOX PARTS 6

 © 2023 Mitsubishi Electric Trane HVAC US LLC. All rights reserved.

1. EXTERNAL PARTS

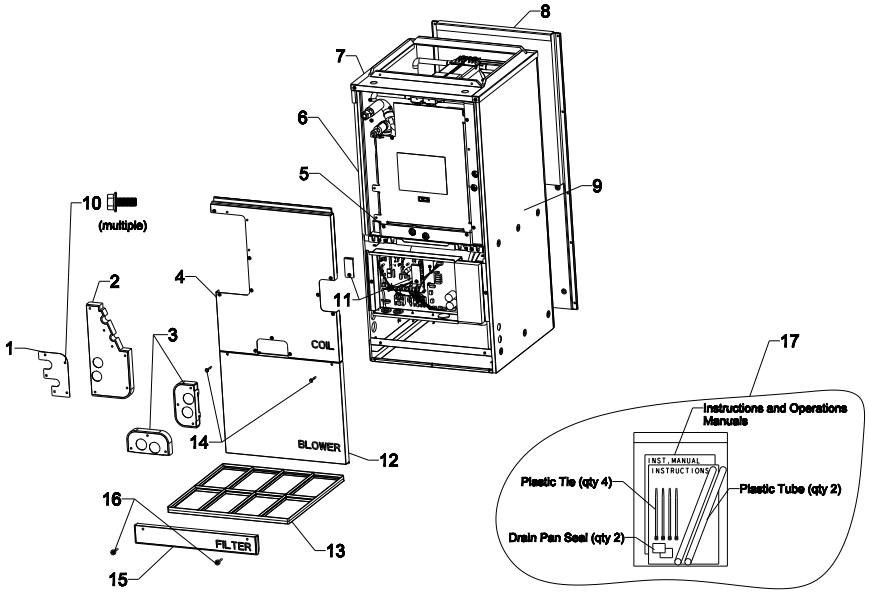

No.	Service Part No.	Part Name	Symbol in Wiring Diagram	Quantity per unit NAXAMT 12A112AA	18A112AA	24A112AA	30A112AA	36A112AA	Remarks
1	U41 007 635	PIPE PANEL		1	1	1	1	1	
2	U41 006 635	PIPE/DRAIN PANEL S		1	1	1			
	U41 009 635	PIPE/DRAIN PANEL M					1	1	
3	U41 008 635	DRAIN PANEL		2	2	2	2	2	
4	U41 004 639	FRONT PANEL HEX S		1	1	1			
	U41 005 639	FRONT PANEL HEX M					1	1	
5	U41 008 087	SCREW H 5X10 KNURLED		28	28	28	29	29	pack of 10 screws
6	U41 004 641	CABINET LEFT S	CN44	1	1	1			*
	U41 005 641	CABINET LEFT M					1	1	
7	U41 004 643	TOP PANEL S		1	1	1			
	U41 005 643	TOP PANEL M					1	1	
8	U41 004 640	CABINET BACK S		1	1	1			
	U41 005 640	CABINET BACK M					1	1	
9	U41 004 642	CABINET RIGHT S	CN24	1	1	1			**
	U41 005 642	CABINET RIGHT M					1	1	
10	U41 009 087	SCREW M5X12 BLACK		46	46	46	46	46	pack of 10 screws
11	U41 001 086	COIL BRACKET		1	1	1	2	2	
12	U41 004 637	FRONT PANEL BLOWER S		1	1	1			
	U41 005 637	FRONT PANEL BLOWER M					1	1	
13	U41 004 500	FILTER-PLASTIC S		1	1	1			16x20
	U41 005 500	FILTER-PLASTIC M					1	1	20x20
14	U41 002 087	SCREW M5X40		2	2	2	2	2	
15	U41 004 636	FRONT PANEL FILTER S		1	1	1			
	U41 005 636	FRONT PANEL FILTER M					1	1	
16	U41 001 087	PLASTIC THUMBSCREW		2	2	2	2	2	M5X35
17	U41 001 818	ACCESSORY BAG, SVZ		1	1	1	1	1	

* The liquid/gas thermistor adapter harness is pre-installed in the Cabinet Left panel. See HEX Parts section for thermistor assy and Control Box parts for adapter harness.

** The electric heater wire harness is pre-installed in the Cabinet Right panel.

© 2023 Mitsubishi Electric Trane HVAC US LLC. All rights reserved.

2. HEX ASSEMBLY PARTS

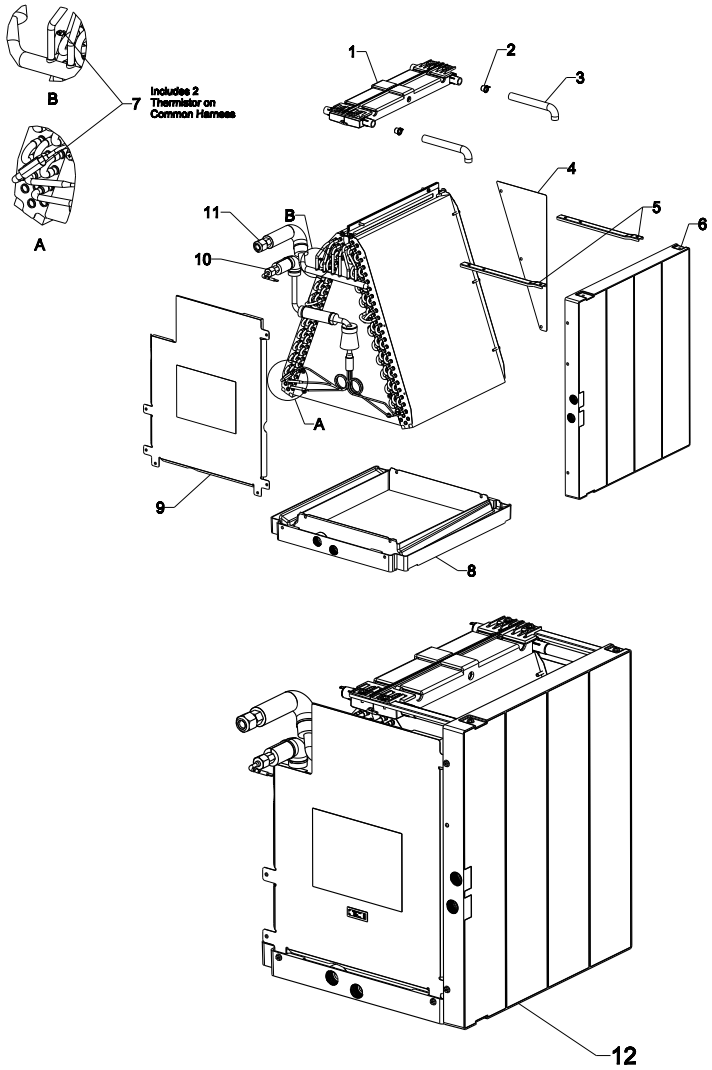

No.	Service Part No.	Part Name	Symbol in Wiring Diagram	Quantity per unit NAXAMT 12A112AA	18A112AA	24A112AA	30A112AA	36A112AA	Remarks
1	U41 012 529	DRAIN PAN ASSY TOP		2	2	2	2	2	
2	U41 002 558	PLUG-TOP DRAIN PAN		4	4	4	4	4	
3	U41 001 525	HOSE-TOP DRAIN PAN		2	2	2	2	2	
4	U41 001 668	PLATE GUIDE REAR S		1	1	1			
	U41 002 668	PLATE GUIDE REAR M					1	1	
5	U41 001 662	SIDE PAN BRACKET S		2	2	2			
	U41 002 662	SIDE PAN BRACKET M					2	2	
6	U41 009 529	DRAIN PAN ASSY SIDE S		1	1	1			
	U41 010 529	DRAIN PAN ASSY SIDE M					1	1	
7	U41 006 200	THERMISTOR LIQUID/GAS PIPE SENSOR ASSY	(CN44)	1	1	1			TH2/TH5 Connects to CN44 via adapter harness in Cabinet Left panel. See Control Box Parts for Adapter Harness
	U41 008 200	THERMISTOR LIQUID/GAS PIPE SENSOR ASSY					1	1	
8	U41 006 529	DRAIN PAN ASSY LOWER S		1	1	1			
	U41 007 529	DRAIN PAN ASSY LOWER M					1	1	
9	U41 004 668	PLATE GUIDE FRONT S		1	1	1			
	U41 005 668	PLATE GUIDE FRONT M					1	1	
10	U41 002 122	NUT FLARE 3/8				1	1	1	
	U41 004 122	NUT FLARE 1/4		1	1				
11	U41 002 122	NUT FLARE 3/8		1					
	U41 003 122	NUT FLARE 1/2F			1				
	U41 001 122	NUT FLARE 5/8				1	1	1	
12	U41 026 480	HEAT EXCHANGER KP12		1					Includes all HEX parts
	U41 027 480	HEAT EXCHANGER KP18			1				Includes all HEX parts
	U41 028 480	HEAT EXCHANGER KP24				1			Includes all HEX parts
	U41 029 480	HEAT EXCHANGER KP30					1	1	Includes all HEX parts

© 2023 Mitsubishi Electric Trane HVAC US LLC. All rights reserved.

3. BLOWER PARTS

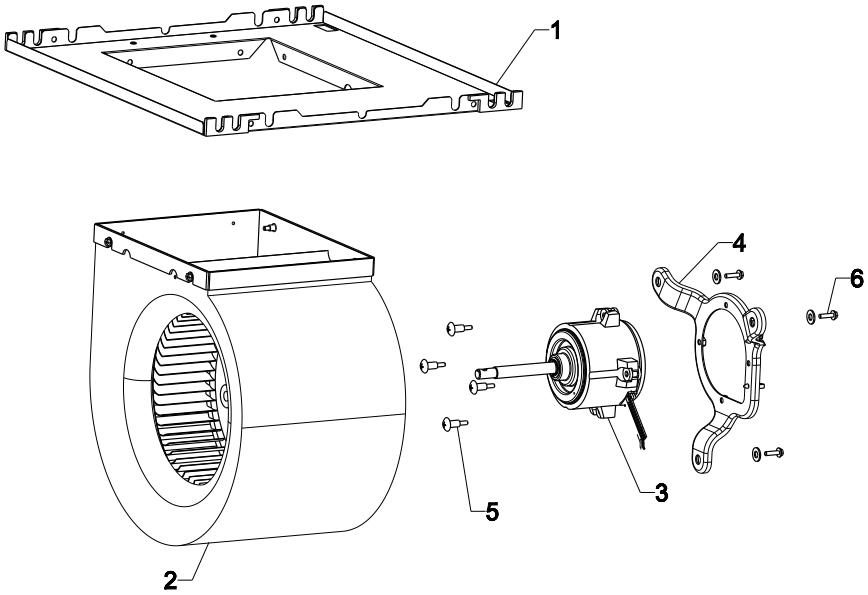

No.	Service Part No.	Part Name	Symbol in Wiring Diagram	Quantity per unit NAXAMT					Remarks
				12A112AA	18A112AA	24A112AA	30A112AA	36A112AA	
1	U41 015 638	FRAME FAN INS S		1	1	1			
	U41 016 638	FRAME FAN INS M					1	1	
2	U41 005 129	FAN CASE S		1	1	1			
	U41 006 129	FAN CASE M					1	1	
3	U41 005 220	BLOWER MOTOR S	CNMF	1	1	1			MS (FAN MOTOR)
	U41 006 220	BLOWER MOTOR M					1	1	
4	U41 001 130	MOTOR BRACKET S M		1	1	1	1	1	
5	U41 005 087	BOLT MOTOR (S, M)		4	4	4	4	4	
6	U41 003 130	MOTOR BRACKET BOLT KIT		3	3	3	3	3	

© 2023 Mitsubishi Electric Trane HVAC US LLC. All rights reserved.

4. CONTROL BOX PARTS

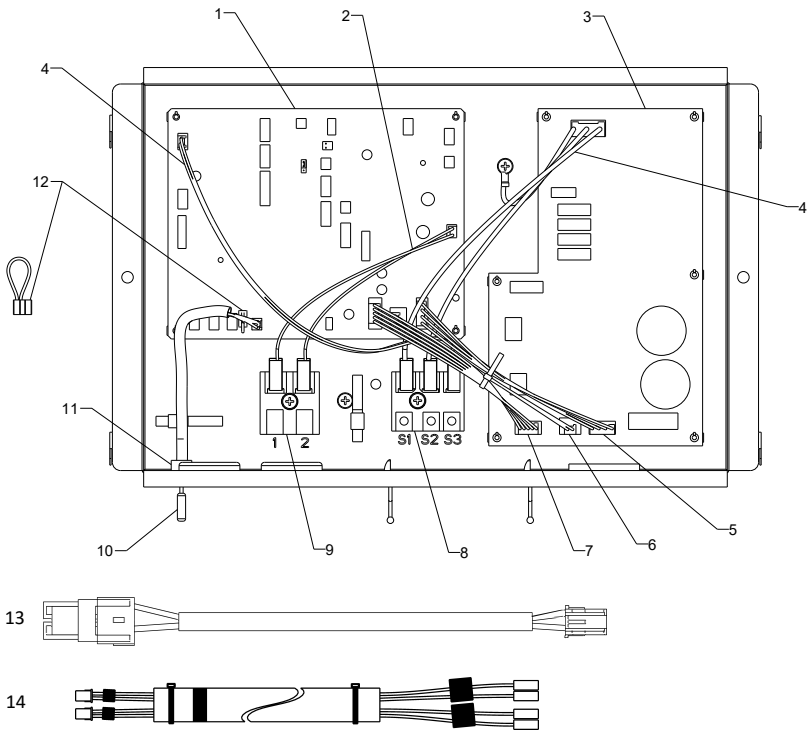

No.	Service Part No.	Part Name	Symbol in Wiring Diagram	Quantity per unit NAXAMT					Remarks
				12A112AA	18A112AA	24A112AA	30A112AA	36A112AA	
1	U41 008 281	CONTROL BOARD		1	1	1	1	1	Includes jumper connector
2	U41 001 392	LEAD WIRE ASSY CN22	CN22	1	1	1	1	1	Connects to Terminal Block; 1, 2
3	U41 005 280	POWER BOARD		1	1	1			
	U41 010 280	POWER BOARD					1	1	
4	U41 002 392	LEAD WIRE ASSY CND	CND & CN3C	1	1	1	1	1	Connects to Terminal Block; S1, S2, S3
5	U71 019 392	LEAD WIRE ASSY XA	CNXA2	1	1	1	1	1	to CNXA1 on P. B.
6	U71 020 392	LEAD WIRE ASSY XC	CNXC2	1	1	1	1	1	to CNXC1 on P. B.
7	U41 003 392	LEAD WIRE ASSY XB	CNXB2	1	1	1	1	1	to CNXB1 on P. B.
8	U41 004 246	TERMINAL BLOCK ASSY	TB4	1	1	1	1	1	S1, S2, S3
9	U41 003 246	TERMINAL BLOCK	TB15	1	1	1	1	1	1, 2
10	U41 007 200	THERMISTOR RETURN AIR TEMP.	CN20	1	1	1	1	1	TH1
11	U41 002 104	BUSHING SRB-R-2		1	1	1	1	1	
12	U41 001 G08	JUMPER CONNECTOR	CN4F	1	1	1	1	1	
13	U41 033 392	LIQUID/GAS THERMISTOR ADAPTER HARNESS KIT	CN44	1	1	1	1	1	Does **not** include the thermistor assembly: THERMISTOR RETURN AIR TEMP Harness also pre-installed in Cabinet Left Panel. See External parts
14	U41 031 392	ELECTRIC HEATER WIRE HARNESS KIT	CN24	1	1	1	1	1	Harness also pre-installed in Cabinet Left Panel. See External parts

 © 2023 Mitsubishi Electric Trane HVAC US LLC. All rights reserved.

This product is designed and intended for use in the residential, commercial and light-industrial environment.

MITSUBISHI ELECTRIC TRANE HVAC US LLC

Toll Free: 800-433-4822

MEUS DOC# MD-1404-K038 Ver.2
August 2023
Specifications are subject to change without notice.

© 2023 Mitsubishi Electric Trane HVAC US LLC. All rights reserved.