MITSUBISHI ELECTRIC

HFC utilized R410A

SPLIT-TYPE, HEAT PUMP AIR CONDITIONERS

March 2019

No. OCB695
REVISED EDITION-A

PARTS CATALOG

<Outdoor unit>

[Model Name]	[Service Ref.]
PUMY-P36NKMU2	PUMY-P36NKMU2
PUMY-P48NKMU2	PUMY-P48NKMU2
PUMY-P60NKMU2	PUMY-P60NKMU2
PUMY-HP36NKMU	PUMY-HP36NKMU
PUMY-HP48NKMU	PUMY-HP48NKMU

Salt proof model

PUMY-P36NKMU2-BS	PUMY-P36NKMU2-BS
PUMY-P48NKMU2-BS	PUMY-P48NKMU2-BS
PUMY-P60NKMU2-BS	PUMY-P60NKMU2-BS

Revision:
- Some descriptions have been modified in REVISED EDITION-A.

OCB695 is void.

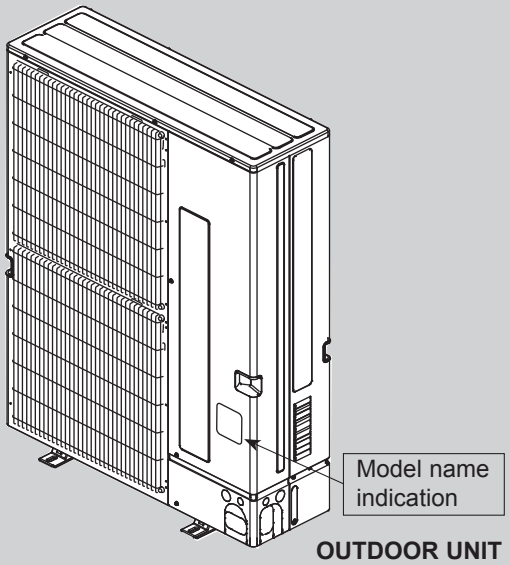

OUTDOOR UNIT

CONTENTS

1. SERVICE PARTS LIST 2
2. OPTIONAL PARTS 10

SERVICE MANUAL (OCH695)

CITY MULTI

1 SERVICE PARTS LIST

STRUCTURAL PARTS

PUMY-P36NKMU2	**PUMY-P36NKMU2-BS**
PUMY-P48NKMU2	**PUMY-P48NKMU2-BS**
PUMY-P60NKMU2	**PUMY-P60NKMU2-BS**
PUMY-HP36NKMU	
PUMY-HP48NKMU	

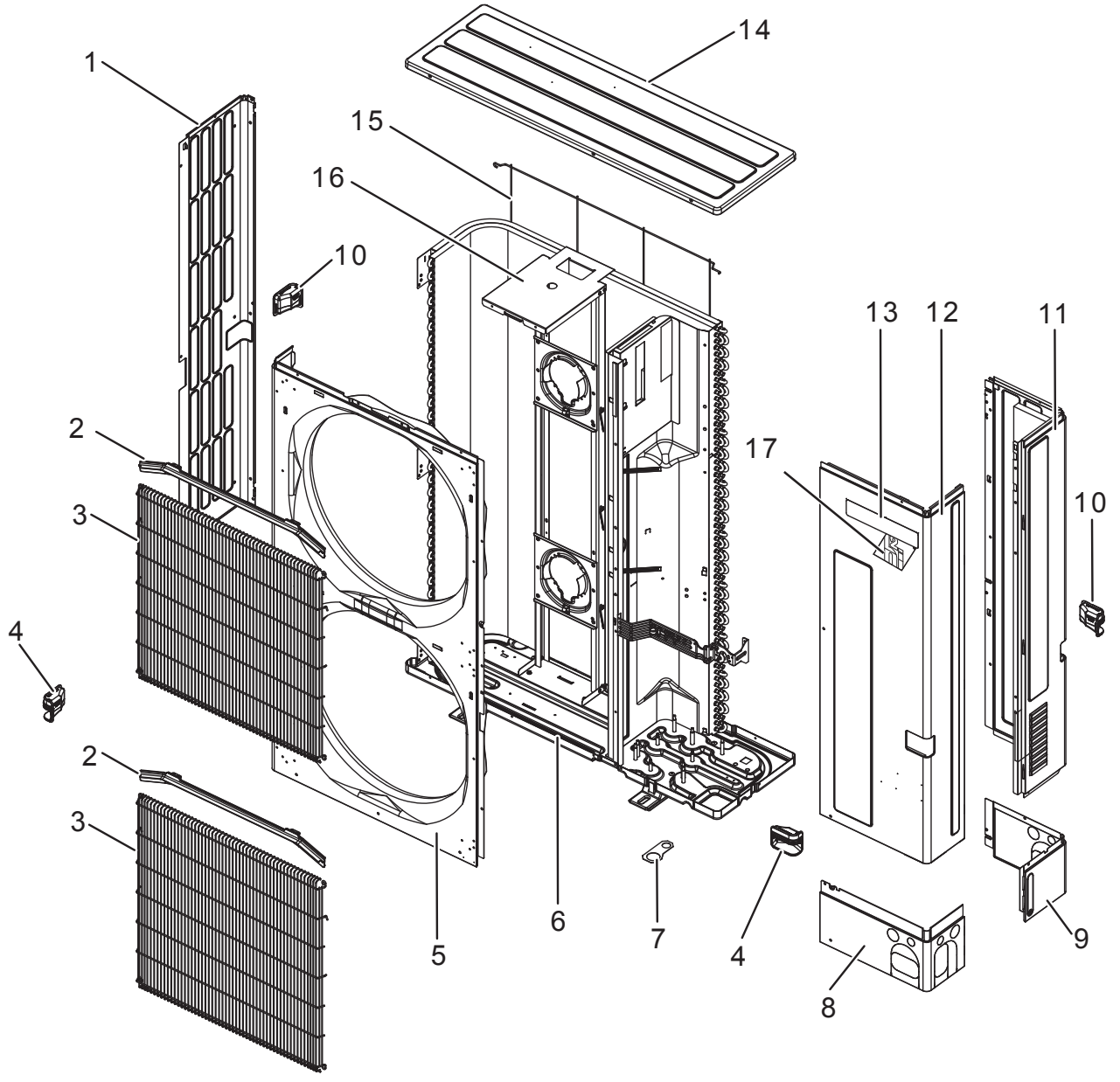

No.	Parts No.	Parts Name	Specification	Q'ty/unit								Remarks (Drawing No.)
				PUMY-P36NKMU2	PUMY-P48NKMU2	PUMY-P60NKMU2	PUMY-P36NKMU2-BS	PUMY-P48NKMU2-BS	PUMY-P60NKMU2-BS	PUMY-HP36NKMU	PUMY-HP48NKMU	
1	R01 E30 662	SIDE PANEL (L)		1	1	1	1	1	1	1	1	
2	R01 E02 631	ICE GUARD		2	2	2	2	2	2	2	2	
3	R01 E73 691	WIRE GRILLE		2	2	2	2	2	2	2	2	
4	R01 E05 655	HANDLE (FRONT)		2	2	2	2	2	2	2	2	
5	R01 E23 668	FRONT PANEL		1	1	1	1	1	1	1	1	
6	R01 E53 686	BASE ASSY		1	1	1	1	1	1	1	1	
7	T7W E04 617	CONDUIT PLATE		1	1	1	1	1	1	1	1	
8	R01 E35 658	COVER PANEL (FRONT)		1	1	1	1	1	1	1	1	
9	R01 E36 658	COVER PANEL (REAR)		1	1	1	1	1	1	1	1	
10	R01 E06 655	HANDLE (REAR)		2	2	2	2	2	2	2	2	
11	R01 E55 661	SIDE PANEL (R)		1	1		1	1		1	1	
	R01 E65 661	SIDE PANEL (R)				1			1			
12	T7W E20 668	SERVICE PANEL		1	1	1	1	1	1	1	1	
13	R01 A06 005	BRAND LABEL (CITY M)		1	1	1	1	1	1	1	1	
14	R01 E36 641	TOP PANEL		1	1	1	1	1	1	1	1	
15	R01 E10 698	REAR GUARD		1	1	1	1	1	1	1	1	
16	R01 E59 130	MOTOR SUPPORT		1	1		1	1		1	1	
	R01 E60 130	MOTOR SUPPORT				1			1			
17	T7W A10 005	LABEL (H2I)								1	1	

FUNCTIONAL PARTS

PUMY-P36NKMU2 **PUMY-P36NKMU2-BS**

PUMY-P48NKMU2 **PUMY-P48NKMU2-BS**

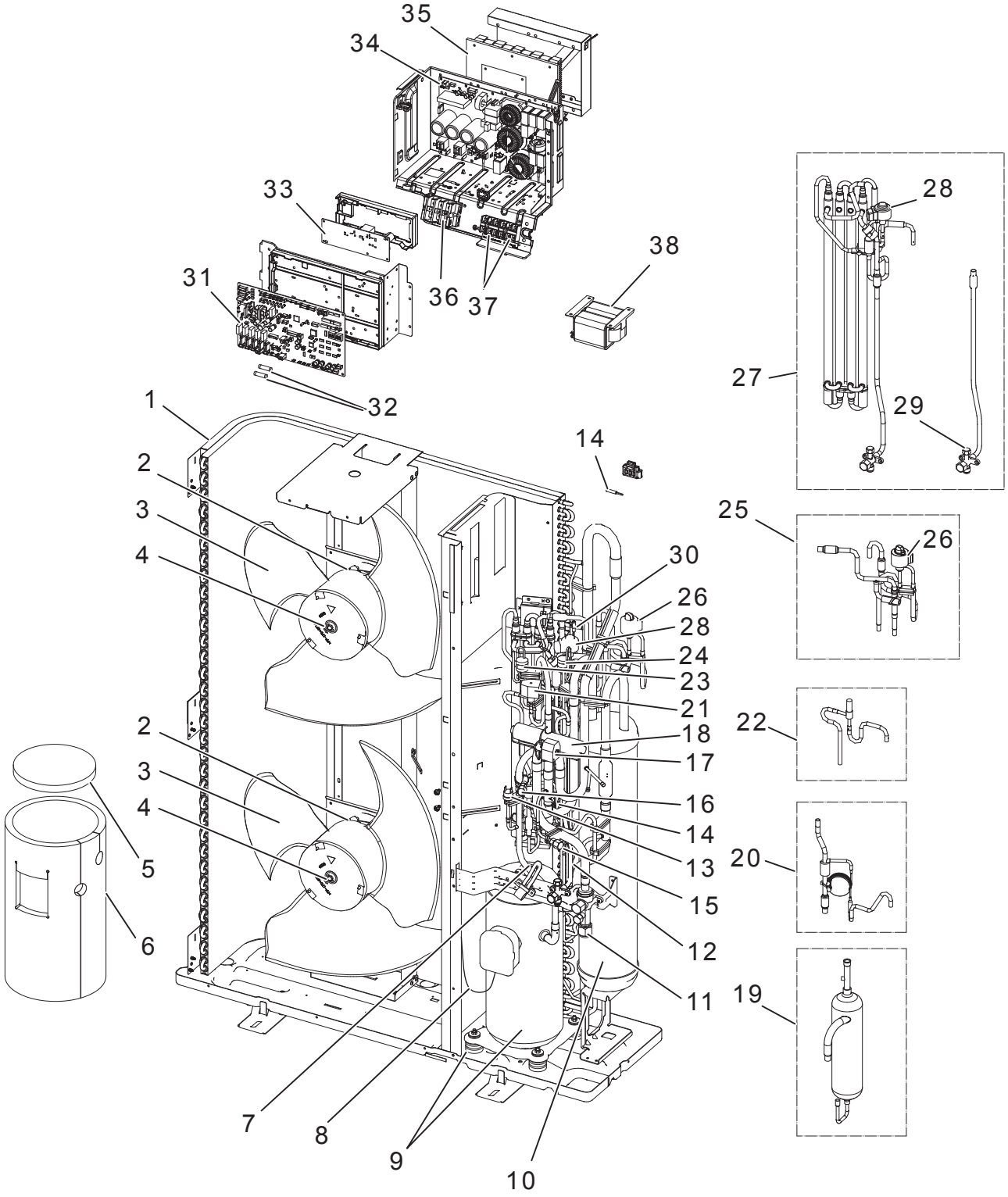

No.	Parts No.	Parts Name	Specification	Q'ty/unit				Remarks (Drawing No.)	Wiring Diagram Symbol
				PUMY-P36NKMU2	PUMY-P48NKMU2	PUMY-P36NKMU2-BS	PUMY-P48NKMU2-BS		
1	R01 R65 408	HEAT EXCHANGER		1	1	1	1		
2	T7W A10 221	FAN MOTOR		2	2	2	2		MF1, MF2
3	R01 E16 115	PROPELLER FAN/D550		2	2	2	2		
4	R01 E16 097	CAP NUT (MEC) M6		2	2	2	2		
5	R01 A57 602	COMP FELT (TOP)		1	1	1	1		
6	R01 A71 602	COMP FELT (BODY)		1	1	1	1		
7	R01 E36 201	THERMISTOR(SHELL)	Compressor	1	1	1	1		TH4
8	R01 E45 510	LEAD ASSY COMP		1	1	1	1		
9	T97 477 077	COMPRESSOR	ANB33FNHMT	1	1	1	1	Includes RUBBER MOUNT	MC
10	R01 E81 440	ACCUMULATOR		1	1	1	1		
11	T7W E11 411	BALL VALVE & STRAINER	5/8	1	1	1	1		
12	R01 H97 202	THERMISTOR	HIC Pipe	1	1	1	1		TH2
13	T7W E15 208	H. P. SWITCH UL4.14MPA		1	1	1	1		63H
14	R01 H99 202	THERMISTOR W	Suction Pipe, Ambient	1	1	1	1	Combined Port	TH6, TH7
15	T7W E13 413	CHARGE PLUG/LB54	Lo	1	1	1	1		
16	R01 E12 413	CHARGE PLUG/LB90	Hi	1	1	1	1		
17	T7W F00 242	SOLENOID COIL (21S4)		1	1	1	1	Includes SCREW	21S4
18	R01 E40 403	4WAY VALVE		1	1	1	1		21S4
19	R01 E16 490	OIL SEPARATOR		1	1	1	1		
20	R01 E02 426	CT ASSY		1	1	1	1		
21	T7W E91 242	SOLENOID COIL (SV)		1	1	1	1	Includes SCREW	SV1
22	T7W E11 428	SV1 ASSY		1	1	1	1		SV1
23	R01 E14 208	H. P. SENSOR		1	1	1	1		63HS
24	R01 E04 209	LOW PRESSURE SENSOR		1	1	1	1		63LS
25	R01 R27 401	LEV ASSY-A		1	1	1	1		LEV-A
26	R01 HR1 242	COIL (LEV)/XAP-5P WH		1	1	1	1		LEV-A
27	T7W B01 401	HIC & LEV-B ASSY		1	1	1	1		LEV-B
28	R01 H58 242	COIL (LEV)/XAP-5P RED		1	1	1	1		LEV-B
29	T7W E11 410	STOP VALVE ASSY-3/8F	3/8	1	1	1	1		
30	R01 H87 202	THERMISTOR	Outdoor Liquid Pipe	1	1	1	1		TH3
31	R01 M00 350	CONTROLLER BOARD		1	1	1	1		MULTI.B.
32	R01 E14 239	FUSE 6.3A 250V	6.3A 250V	2	2	2	2		F1, F2
33	R01 E07 311	M-NET POWER BOARD		1	1	1	1		M-NET P.B.
34	R01 M02 353	POWER BOARD		1	1	1	1		P.B.
35	R01 A10 371	HEAT SINK		1	1	1	1	Includes SCREWS	
36	T7W 603 246	T.B./L1.L2.G	3P (L1, L2, GR)	1	1	1	1		TB1
37	R01 E27 246	T.B./M1.M2.S	3P (M1, M2, S)	2	2	2	2		TB3, TB7
38	R01 E51 259	REACTOR		1	1	1	1		DCL

FUNCTIONAL PARTS
PUMY-P60NKMU2 PUMY-P60NKMU2-BS

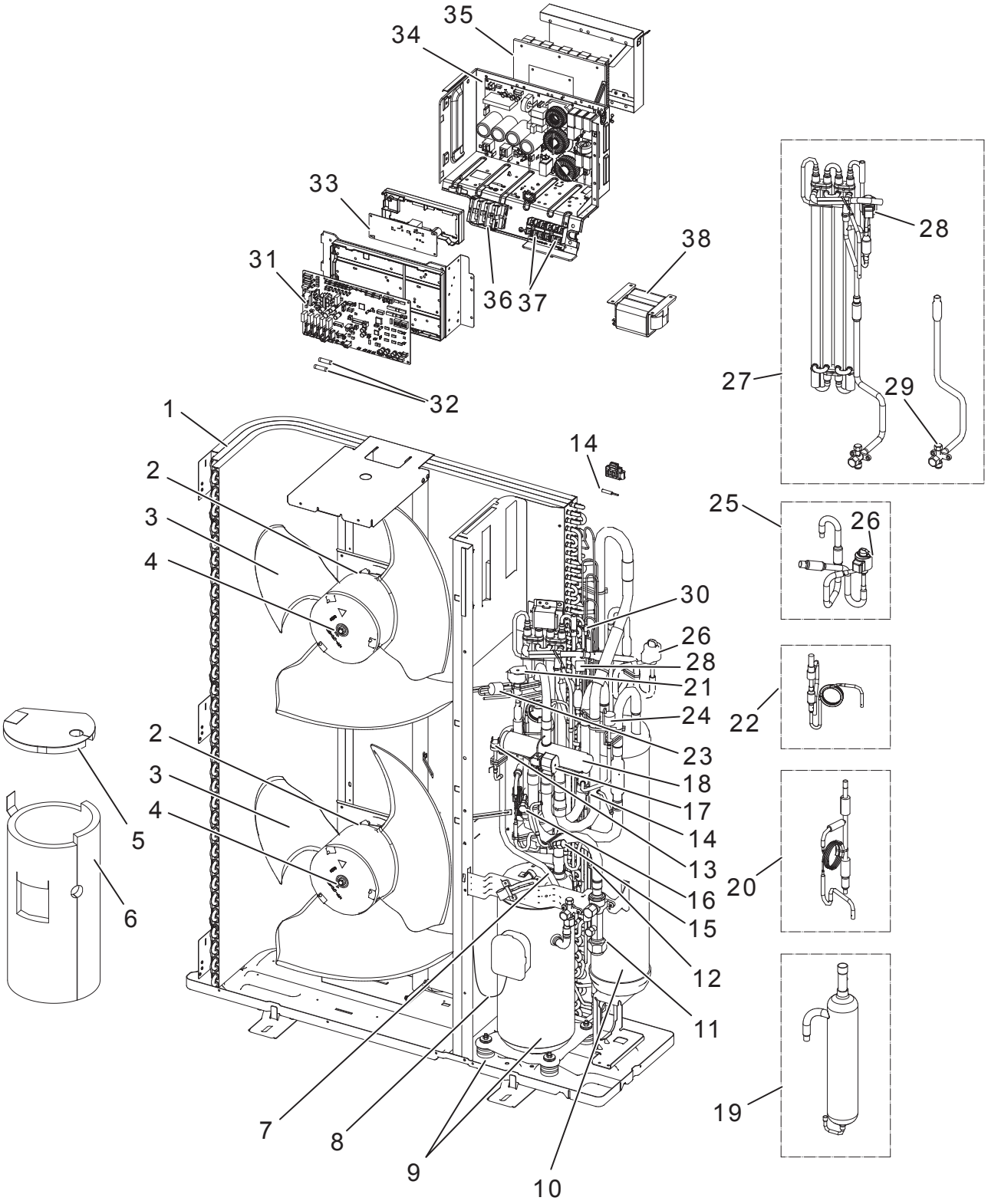

No.	Parts No.	Parts Name	Specification	Q'ty/unit		Remarks (Drawing No.)	Wiring Diagram Symbol
				PUMY-P60NKMU2	PUMY-P60NKMU2-BS		
1	R01 H66 408	HEAT EXCHANGER		1	1		
2	T7W A12 221	FAN MOTOR		2	2		MF1, MF2
3	R01 E16 115	PROPELLER FAN/D550		2	2		
4	R01 E16 097	CAP NUT (MEC) M6		2	2		
5	T7W A15 602	COMP FELT (TOP)		1	1		
6	T7W A14 602	COMP FELT (BODY)		1	1		
7	R01 E36 201	THERMISTOR(SHELL)	Compressor	1	1		TH4
8	T7W A05 510	LEAD ASSY COMP		1	1		
9	T97 479 077	COMPRESSOR	ANB52FYDMT	1	1	Includes RUBBER MOUNT	MC
10	R01 H67 440	ACCUMULATOR		1	1		
11	T7W E07 411	BALL VALVE & STRAINER	3/4	1	1		
12	R01 H97 202	THERMISTOR	HIC Pipe	1	1		TH2
13	T7W E15 208	H. P. SWITCH UL4.14MPA		1	1		63H
14	R01 H99 202	THERMISTOR W	Suction Pipe, Ambient	1	1	Combined Port	TH6, TH7
15	R01 E12 413	CHARGE PLUG/LB90	Lo	1	1		
16	R01 E12 413	CHARGE PLUG/LB90	Hi	1	1		
17	T7W F00 242	SOLENOID COIL (21S4)		1	1	Includes SCREW	21S4
18	T7W E09 403	4WAY VALVE		1	1		21S4
19	R01 E14 490	OIL SEPARATOR		1	1		
20	T7W H06 426	CT ASSY		1	1		
21	T7W E91 242	SOLENOID COIL (SV)		1	1	Includes SCREW	SV1
22	T7W E12 428	SV1 ASSY		1	1		SV1
23	R01 E14 208	H. P. SENSOR		1	1		63HS
24	R01 E04 209	LOW PRESSURE SENSOR		1	1		63LS
25	T7W E95 401	LEV ASSY-A/C-HIC		1	1		LEV-A
26	R01 H39 242	COIL (LEV)/XAP-5P WH		1	1		LEV-A
27	T7W B02 401	HIC & LEV-B ASSY		1	1		LEV-B
28	R01 H58 242	COIL (LEV)/XAP-5P RED		1	1		LEV-B
29	T7W E12 410	STOP VALVE ASSY-3/8F	3/8	1	1		
30	R01 H87 202	THERMISTOR	Outdoor Liquid Pipe	1	1		TH3
31	T7W M01 315	CONTROLLER BOARD		1	1		MULTI.B.
32	R01 E14 239	FUSE 6.3A 250V	6.3A 250V	2	2		F1, F2
33	R01 E07 311	M-NET POWER BOARD		1	1		M-NET P.B.
34	T7W M00 323	POWER BOARD		1	1		P.B.
35	R01 A10 371	HEAT SINK		1	1	Includes SCREWS	
36	T7W 603 246	T.B./L1.L2.G	3P (L1, L2, GR)	1	1		TB1
37	R01 E27 246	T.B./M1.M2.S	3P (M1, M2, S)	2	2		TB3, TB7
38	T7W E23 259	REACTOR		1	1		DCL

FUNCTIONAL PARTS
PUMY-HP36NKMU
PUMY-HP48NKMU

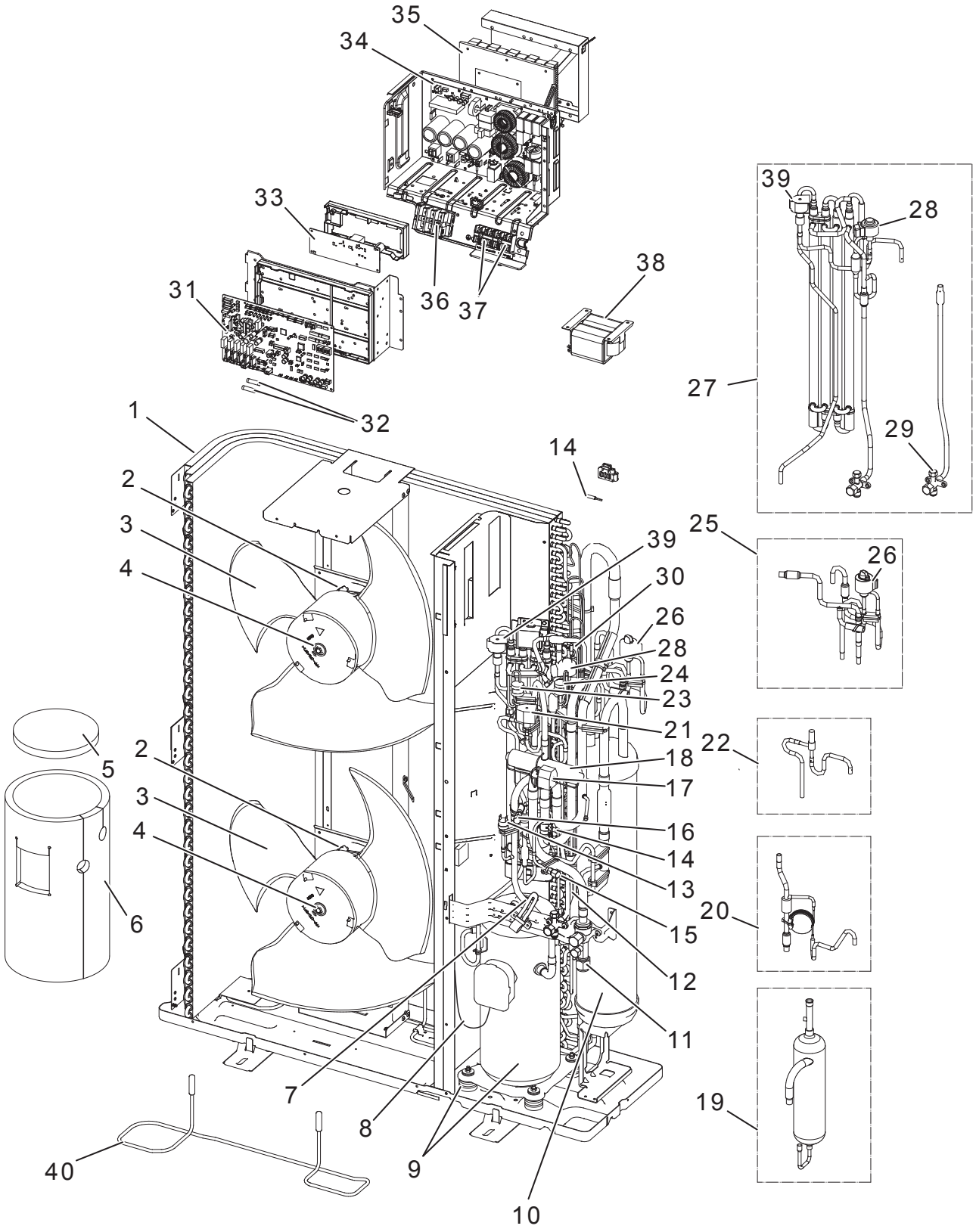

No.	Parts No.	Parts Name	Specification	Q'ty/unit		Remarks (Drawing No.)	Wiring Diagram Symbol
				PUMY-HP36NKMU	PUMY-HP48NKMU		
1	R01 R65 408	HEAT EXCHANGER		1	1		
2	T7W A10 221	FAN MOTOR		2	2		MF1, MF2
3	R01 E16 115	PROPELLER FAN/D550		2	2		
4	R01 E16 097	CAP NUT (MEC) M6		2	2		
5	R01 A57 602	COMP FELT (TOP)		1	1		
6	R01 A70 602	COMP FELT (BODY)		1	1		
7	R01 E36 201	THERMISTOR(SHELL)	Compressor	1	1		TH4
8	R01 E45 510	LEAD ASSY COMP		1	1		
9	T97 443 077	COMPRESSOR	ANB33FJSMT	1	1	Includes RUBBER MOUNT	MC
10	R01 E81 440	ACCUMULATOR		1	1		
11	T7W E11 411	BALL VALVE & STRAINER	5/8	1	1		
12	R01 H97 202	THERMISTOR	HIC Pipe	1	1		TH2
13	T7W E15 208	H. P. SWITCH UL4.14MPA		1	1		63H
14	R01 H99 202	THERMISTOR W	Suction Pipe, Ambient	1	1	Combined Port	TH6, TH7
15	T7W E13 413	CHARGE PLUG/LB54	Lo	1	1		
16	R01 E12 413	CHARGE PLUG/LB90	Hi	1	1		
17	T7W F00 242	SOLENOID COIL (21S4)		1	1	Includes SCREW	21S4
18	R01 E40 403	4WAY VALVE		1	1		21S4
19	R01 E16 490	OIL SEPARATOR		1	1		
20	R01 E02 426	CT ASSY		1	1		
21	T7W E91 242	SOLENOID COIL (SV)		1	1	Includes SCREW	SV1
22	T7W E11 428	SV1 ASSY		1	1		SV1
23	R01 E14 208	H. P. SENSOR		1	1		63HS
24	R01 E04 209	LOW PRESSURE SENSOR		1	1		63LS
25	R01 R27 401	LEV ASSY-A		1	1		LEV-A
26	R01 HR1 242	COIL (LEV)/XAP-5P WH		1	1		LEV-A
27	T7W B03 401	HIC & LEV-B ASSY		1	1		LEV-B
28	R01 H58 242	COIL (LEV)/XAP-5P RED		1	1		LEV-B
29	T7W E11 410	STOP VALVE ASSY-3/8F	3/8	1	1		
30	R01 H87 202	THERMISTOR	Outdoor Liquid Pipe	1	1		TH3
31	R01 M00 350	CONTROLLER BOARD		1	1		MULTI.B.
32	R01 E14 239	FUSE 6.3A 250V	6.3A 250V	2	2		F1, F2
33	R01 E07 311	M-NET POWER BOARD		1	1		M-NET P.B.
34	T7W M00 323	POWER BOARD		1	1		P.B.
35	R01 A10 371	HEAT SINK		1	1	Includes SCREWS	
36	T7W 603 246	T.B./L1.L2.G	3P (L1, L2, GR)	1	1		TB1
37	R01 E27 246	T.B./M1.M2.S	3P (M1, M2, S)	2	2		TB3, TB7
38	T7W E23 259	REACTOR		1	1		DCL
39	T7W E72 242	SOLENOID COIL (SV)		1	1	Includes SCREW	SV2
40	T7W B03 300	BASE HEATER		1	1		BH, THP

2 OPTIONAL PARTS

Parts name	Parts No.
AIR OUTLET GUIDE*1	PAC-SH96SG-E
DRAIN SOCKET *2	PAC-SG61DS-E
CENTRALIZED DRAIN PAN*2	PAC-SH97DP-E
DEFROST HEATER	PAC-SJ20BH-E
2 BRANCH PIPE (Joint)	CMY-Y62-G-E
4 BRANCH PIPE (Joint)	CMY-Y64-G-E
8 BRANCH PIPE (Joint)	CMY-Y68-G-E
JOINT PIPE (Unit → Extension pipe)	MAC-A454JP-E (ø3/8 [9.52] → ø1/2 [12.7])
	PAC-SG76RJ-E (ø3/8 [9.52] → ø5/8 [15.88])
	PAC-SG75RJ-E (ø5/8 [15.88] → ø3/4 [19.05])*3
	PAC-493PI (ø1/4 [6.35] → ø3/8 [9.52])
	MAC-A456JP-E (ø1/2 [12.7] → ø5/8 [15.88])
EXTERNAL LEV BOX	PAC-SG95LE-E

*1: Need 2 pieces
*2: Only for PUMY-P series
It can not be used with DEFROST HEATER.
*3: Only for PUMY-P60

MITSUBISHI ELECTRIC CORPORATION

HEAD OFFICE: TOKYO BUILDING, 2-7-3, MARUNOUCHI, CHIYODA-KU, TOKYO 100-8310, JAPAN

©Copyright 2018 MITSUBISHI ELECTRIC CORPORATION
Issued: Mar. 2019 No. OCB695 REVISED EDITION-A
Published: Nov. 2018 No. OCB695
Made in Japan

Specifications are subject to change without notice.