MITSUBISHI ELECTRIC

Changes for the Better

for a greener tomorrow

AIR CONDITIONING SYSTEMS

CITY MULTI

DATA BOOK

MODEL

PUMY-P36/48/60NKMU3 (-BS)

PUMY-HP36/48NKMU1

Heat Pump S-Series

Type(Btu/h)	36,000	48,000	60,000
Model Name	PUMY-P36NKMU3 (-BS)	PUMY-P48NKMU3 (-BS)	PUMY-P60NKMU3 (-BS)

Type(Btu/h)	36,000	48,000
Model Name	PUMY-HP36NKMU1	PUMY-HP48NKMU1

CONTENTS

PUMY-P-NKMU3, PUMY-HP-NKMU1

1. SPECIFICATIONS 2
2. EXTERNAL DIMENSIONS 4
3. CENTER OF GRAVITY 6
4. ELECTRICAL WIRING DIAGRAMS 7
5. SOUND LEVELS 10
6. OPERATION TEMPERATURE RANGE 11
7. CAPACITY TABLES 12
   - 7-1. Selection of Cooling/Heating Units 12
   - 7-2. Correction by temperature 18
   - 7-3. Correction by total indoor 22
   - 7-4. Correction by refrigerant piping length 24
   - 7-5. Correction at frost and defrost 25
8. OPTIONAL PARTS 26
   - 8-1. JOINT 26
   - 8-2. HEADER 27
9. ELECTRICAL WORK 28
   - 9-1. General cautions 28
   - 9-2. Power supply for Outdoor unit 29
   - 9-3. Power cable specifications 30
   - 9-4. Power supply examples 31
10. M-NET CONTROL 32
   - 10-1. Transmission cable length limitation 32
   - 10-2. Transmission cable specifications 33
   - 10-3. System configuration restrictions 34
   - 10-4. Address setting 38
11. PIPING DESIGN 48
   - 11-1. R410A Piping material 48
   - 11-2. Piping Design 48
   - 11-3. Refrigerant charging calculation 50
12. OUTDOOR INSTALLATION 52
   - 12-1. Requirement on installation site 52
   - 12-2. Spacing 53
   - 12-3. Piping direction 54

Model			PUMY-P36NKMU3 PUMY-P36NKMU3-BS	PUMY-P48NKMU3 PUMY-P48NKMU3-BS	PUMY-P60NKMU3 PUMY-P60NKMU3-BS
Power source			208/230 V AC, 60 Hz		
Cooling capacity (Nominal)	*1	kW	10.6	14.1	17.6
	*1	kcal/h	9,100	12,100	15,100
	*1	Btu/h	36,000	48,000	60,000
	Power input	W	2310	3545	4390
	Current input	A	11.3/10.2	17.3/15.6	21.3/19.3
	EER	kW/kW	15.5	13.5	13.6
Temp. range of cooling	Indoor	W.B.	59 to 75°F [15 to 24°C]		
	Outdoor	D.B.	23 to 115°F [−5 to 46°C]*3*4		
Heating capacity (Nominal)	*2	kW	12.3	15.8	19.3
	*2	kcal/h	10,600	13,600	16,600
	*2	Btu/h	42,000	54,000	66,000
	Power input	W	3020	3880	4640
	Current input	A	14.7/13.3	18.9/17.1	22.6/20.4
	COP	kW/kW	4.08	4.08	4.17
Temp. range of heating	Indoor	D.B.	59 to 81°F [15 to 27°C]		
	Outdoor	W.B.	−13 to 59°F [−25 to 15°C]		
Indoor unit connectable	Total capacity		50 to 130% of outdoor unit capacity		
	Model/ Quantity	CITY MULTI	P04-P36/11	P04-P54/12	P04-P72/12
Sound pressure level (measured in anechoic room)		dB <A>	49/53	51/54	58/59
Refrigerant piping diameter	Liquid pipe	mm (in)	9.52 (3/8)		
	Gas pipe	mm (in)	15.88 (5/8)		19.05 (3/4)
FAN	Type x Quantity		Propeller Fan × 2		
	Airflow rate	m3/min	110		138
		L/s	1,834		2,300
		cfm	3,885		4,879
	Control, Driving mechanism		DC control		
	Motor output	kW	0.074 + 0.074		0.2 + 0.2
	External static press.		0		
Compressor	Type x Quantity		Scroll hermetic compressor × 1		
	Manufacture		Mitsubishi Electric Corporation		
	Starting method		Inverter		
	Motor output	kW	2.8	3.4	3.9
	Case heater	kW	0		
	Lubricant		FV50S (2.3 liter)		FVC68D (2.3 liter)
External finish			Galvanized Steel Sheet <MUNSELL 3Y 7.8/1.1>		
External dimension H x W x D		mm	1,338 × 1,050 × 330 (+25)		
		in	52-11/16 × 41-11/32 × 13 (+1)		
Protection devices	High pressure protection		High pressure Switch, High pressure Sensor		
	Inverter circuit (COMP./FAN)		Overcurrent detection, Overheat detection (Heat sink thermistor)		
	Compressor		Compressor thermistor, Over current detection		
	Fan motor		Overheating, Voltage protection		
Refrigerant	Type x original charge		R410A 4.8 kg		R410A 5.1 kg
	Control		Linear Expansion Valve		
Net weight		kg (lb)	123 (271)		137 (302)
Heat exchanger			Cross Fin and Copper tube		
HIC circuit (HIC: Heat Inter-Changer)			HIC circuit		
Defrosting method			Reversed refrigerant circuit		
Drawing	External		BK01V261		
	Wiring		BH78B813		
Standard attachment	Document		Installation Manual		
	Accessory		Grounded lead wire × 2, conduit plate		
Optional parts			Joint: CMY-Y62-G-E Header: CMY-Y64/68-G-E		
Remarks			Details on foundation work, duct work, insulation work, electrical wiring, power source switch, and other items shall be referred to the Installation Manual. Due to continuing improvement, above specifications may be subject to change without notice.		
Notes:			*1. Nominal cooling conditions (subject to ISO 15042) Indoor: 27°CD.B./19°CW.B. (81°FD.B./66°FW.B.), Outdoor: 35°CD.B. (95°FD.B.) Pipe length: 7.5 m (24-9/16 ft.), Level difference: 0 m (0 ft.) *2. Nominal heating conditions (subject to ISO 15042) Indoor: 20°CD.B. (68°FD.B.), Outdoor: 7°CD.B./6°CW.B. (45°FD.B./43°FW.B.) Pipe length: 7.5 m (24-9/16 ft.), Level difference: 0 m (0 ft.) *3. 50 to 115°F (10 to 46°C)D.B.: When connecting PKFY-P06NBMU, PKFY-P08NHMU, PKFY-P04/06/08/12NLMU, PFFY-P06/08/12NEMU, and PFFY-P06/08/12NRMU type indoor unit. *4. 5 to 115°F (-15 to 46°C)D.B.: When using an optional air protect guide (PAC-SH95AG-E). However, this condition does not apply to the indoor units listed in *3.		

1. SPECIFICATIONS

Model			PUMY-HP36NKMU1	PUMY-HP48NKMU1
Power source			208/230 V AC, 60 Hz	
Cooling capacity (Nominal)	*1	kW	10.6	14.1
	*1	kcal/h	9,100	12,100
	*1	Btu/h	36,000	48,000
	Power input	W	2310	3545
	Current input	A	11.3/10.2	17.3/15.6
	EER	kW/kW	15.5	13.5
Temp. range of cooling	Indoor	W.B.	59 to 75°F [15 to 24°C]	
	Outdoor	D.B.	23 to 115°F [−5 to 46°C]*3*4	
Heating capacity (Nominal)	*2	kW	12.3	15.8
	*2	kcal/h	10,600	13,600
	*2	Btu/h	42,000	54,000
	Power input	W	3020	3880
	Current input	A	14.7/13.3	18.9/17.1
	COP	kW/kW	4.08	4.08
Temp. range of heating	Indoor	D.B.	59 to 81°F [15 to 27°C]	
	Outdoor	W.B.	−13 to 59°F [−25 to 15°C]	
Indoor unit connectable	Total capacity		50 to 130% of outdoor unit capacity	
	Model/ Quantity	CITY MULTI	P04-P36/11P	04-P54/12
Sound pressure level (measured in anechoic room)		dB <A>	49/53	51/54
Refrigerant piping diameter	Liquid pipe	mm (in)	9.52 (3/8)	
	Gas pipe	mm (in)	15.88 (5/8)	
FAN	Type x Quantity		Propeller Fan × 2	
	Airflow rate	m3/min	110	
		L/s	1,834	
		cfm	3,885	
	Control, Driving mechanism		DC control	
	Motor output	kW	0.074 + 0.074	
	External static press.		0	
Compressor	Type x Quantity		Scroll hermetic compressor × 1	
	Manufacture		Mitsubishi Electric Corporation	
	Starting method		Inverter	
	Motor output	kW	2.8	3.4
	Case heater	kW	0	
	Lubricant		FV50S (2.3 liter)	
External finish			Galvanized Steel Sheet	
			<MUNSELL 3Y 7.8/1.1>	
External dimension H x W x D		mm	1,338 × 1,050 × 330 (+25)	
		in	52-11/16 × 41-11/32 × 13 (+1)	
Protection devices	High pressure protection		High pressure Switch, High pressure Sensor	
	Inverter circuit (COMP./FAN)		Overcurrent detection, Overheat detection (Heat sink thermistor)	
	Compressor		Compressor thermistor, Over current detection	
	Fan motor		Overheating, Voltage protection	
Refrigerant	Type x original charge		R410A 4.8 kg	
	Control		Linear Expansion Valve	
Net weight		kg (lb)	126 (278)	
Heat exchanger			Cross Fin and Copper tube	
HIC circuit (HIC: Heat Inter-Changer)			HIC circuit	
Defrosting method			Reversed refrigerant circuit	
Drawing	External		BK01V261	
	Wiring		BH78B813	
Standard attachment	Document		Installation Manual	
	Accessory		Grounded lead wire × 2, conduit plate	
Optional parts			Joint: CMY-Y62-G-E	
			Header: CMY-Y64/68-G-E	
Remarks			Details on foundation work, duct work, insulation work, electrical wiring, power source switch, and other items shall be referred to the Installation Manual. Due to continuing improvement, above specifications may be subject to change without notice.	
Notes:			*1. Nominal cooling conditions (subject to ISO 15042) Indoor: 27°CD.B./19°CW.B. (81°FD.B./66°FW.B.), Outdoor: 35°CD.B. (95°FD.B.) Pipe length: 7.5 m (24-9/16 ft.), Level difference: 0 m (0 ft.) *2. Nominal heating conditions (subject to ISO 15042) Indoor: 20°CD.B. (68°FD.B.), Outdoor: 7°CD.B./6°CW.B. (45°FD.B./43°FW.B.) Pipe length: 7.5 m (24-9/16 ft.), Level difference: 0 m (0 ft.) *3. 50 to 115°F (10 to 46°C)D.B.: When connecting PKFY-P06NBMU, PKFY-P08NHMU, PKFY-P04/06/08/12NLMU, PFFY-P06/08/12NEMU, and PFFY-P06/08/12NRMU type indoor unit. *4. 5 to 115°F (-15 to 46°C)D.B.: When using an optional air protect guide (PAC-SH95AG-E). However, this condition does not apply to the indoor units listed in *3.	

PUMY-P36, 48NKMU3 (-BS)
PUMY-HP36, 48NKMU1

Unit: mm(in)

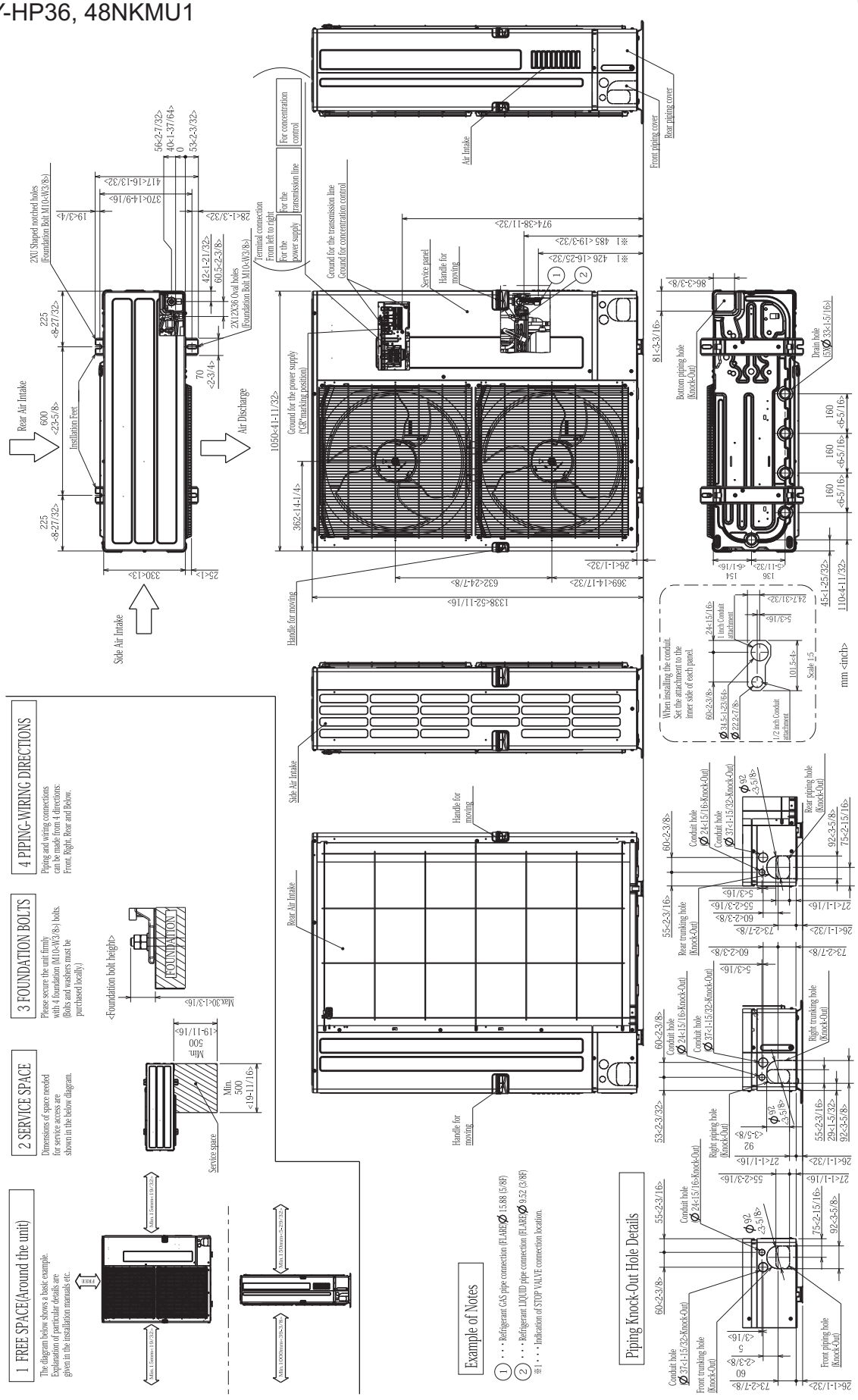

PUMY-P60NKMU3 (-BS)

Unit: mm(in)

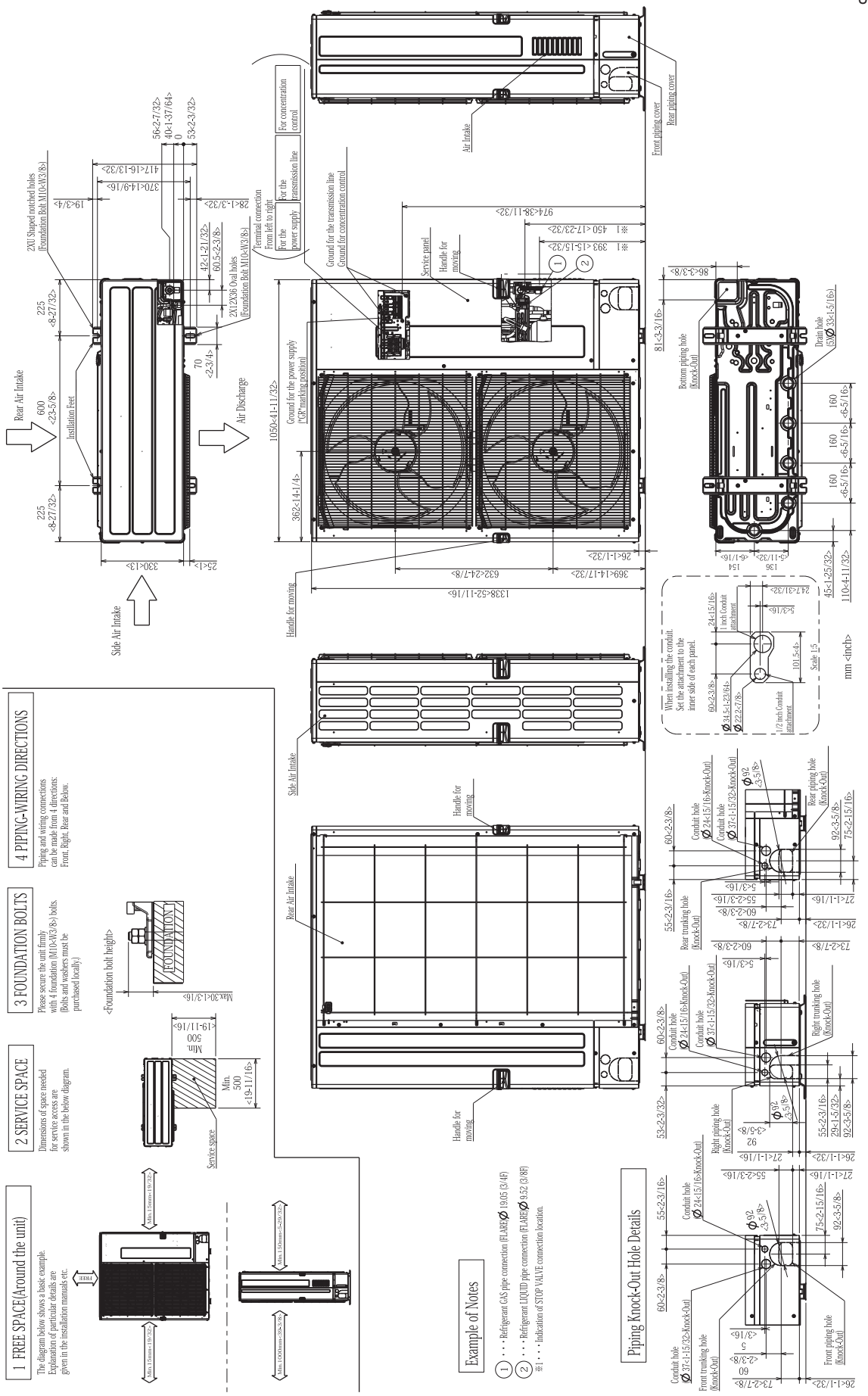

PUMY-P36, 48, 60NKMU3 (-BS)
PUMY-HP36, 48NKMU1

Unit: mm[in.]

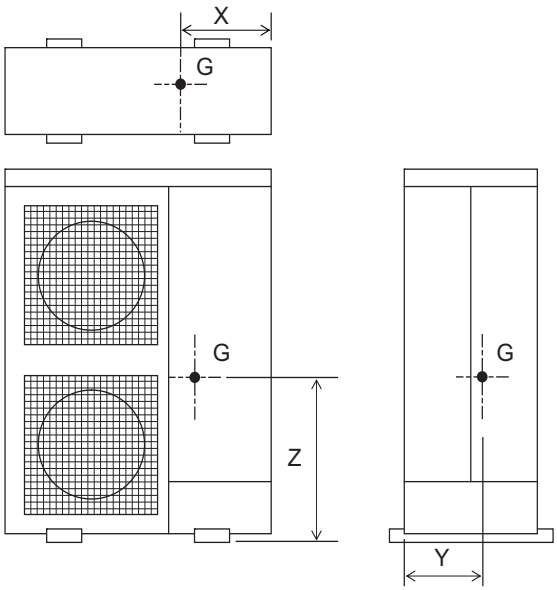

Model	X	Y	Z
PUMY-P36, 48NKMU3	370 [14-9/16]	160[6-19/64]	565[22-7/32]
PUMY-P60NKMU3	410 [16-9/64]	175[6-57/64]	560[22-3/64]
PUMY-HP36, 48NKMU1	380[15]	165[6-1/2]	575[22-41/64]

PUMY-P36, 48NKMU3 (-BS)

SYMBOL	NAME
TB1	Terminal Block 〈Power Supply〉
TB3	Terminal Block 〈Indoor/Outdoor Transmission Line〉
TB7	Terminal Block 〈Centralized Control Transmission Line〉
MC	Motor for Compressor
MF1, MF2	Fan Motor
21S4	Solenoid Valve Coil 〈4-Way Valve〉
63H	High Pressure Switch
63HS	High Pressure Sensor
63LS	Low Pressure Sensor
SV1	Solenoid Valve Coil 〈Bypass Valve〉
TH2	Thermistor 〈Hic Pipe〉
TH3	Thermistor 〈Outdoor Liquid Pipe〉
TH4	Thermistor 〈Compressor〉
TH6	Thermistor 〈Suction Pipe〉
TH7	Thermistor 〈Ambient〉
TH8	Thermistor 〈Heat Sink〉

SYMBOL	NAME
LEV-A, LEV-B	Linear Expansion Valve
DCL1, DCL2, DCL3	Reactor
P.B.	Power Circuit Board
U/V/W	Connection Terminal 〈U/V/W-Phase〉
LI	Connection Terminal 〈L1-Phase〉
NI	Connection Terminal 〈L2-Phase〉
TB1A, TB2A, TB3A TB1B, TB2B, TB3B	Connection Terminal 〈Reactor〉
IC500	Converter
IC600	Inverter
EI, E2, E3, E4	ConnectionTerminal 〈Electrical Parts Box〉
MULTI.B.	Multi Controller Circuit Board
SW1	Switch 〈Display Selection〉
SW2	Switch 〈Function/Model Selection〉
SW3	Switch 〈Test Run〉
SW4	Switch 〈Model Selection〉
SW5	Switch 〈Function Selection〉
SW6	Switch 〈Function Selection〉

SYMBOL	NAME
SW7	Switch 〈Function Selection〉
SW8	Switch 〈Model Selection〉
SW9	Switch 〈Function/Model Selection〉
SWU1	Switch 〈Unit Address Selection, ones digit〉
SWU2	Switch 〈Unit Address Selection, tens digit〉
SS	Connector 〈Connection for Option〉
CN3D	Connector 〈Connection for Option〉
CN3S	Connector 〈Connection for Option〉
CN3N	Connector 〈Connection for Option〉
CN51	Connector 〈Connection for Option〉
LED1, LED2	LED 〈Operation Inspection Display〉
LED3	LED 〈Power Supply to Main Microcomputer〉
F1, F2	Fuse 〈T6.3A L250V〉
X501～X505	Relay
M-NET P.B.	M-NET Power Circuit Board
TB1	ConnectionTerminal 〈Electrical Parts Box〉

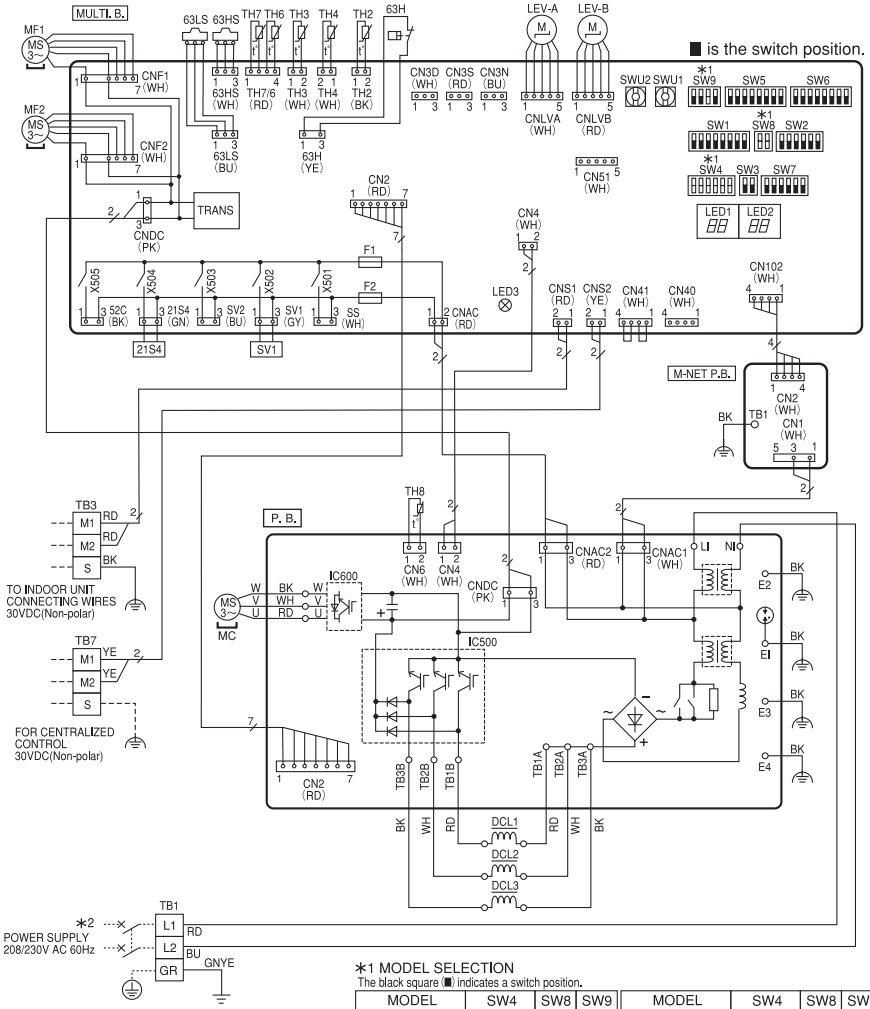

*1 MODEL SELECTION
The black square (■) indicates a switch position.

MODEL	SW4	SW8	SW9
PUMY-P36NKMU3	ON OFF 1 2 3 4 5 6	ON OFF 1 2	ON OFF 3
PUMY-P48NKMU3	ON OFF 1 2 3 4 5 6	ON OFF 1 2	ON OFF 3

*2 Use copper supply wires.
Utiliser des fils d'alimentation en cuivre.

Cautions when Servicing

- ⚠ WARNING: When the main supply is turned off, the voltage in the main capacitor will drop to 20 VDC in approx. 2 minutes. When servicing, make sure that LED1, LED2 on the outdoor multi controller circuit board goes out, and then wait for at least 1 minute.
- Components other than the outdoor circuit boards may be faulty: Check and take corrective action, referring to the service manual. Do not replace the outdoor circuit boards without checking.

NOTES:
1. Refer to the wiring diagrams of the indoor units for details on wiring of each indoor unit.
2. Self-diagnosis function
   The indoor and outdoor units can be diagnosed automatically using the self-diagnosis switch (SW1) and LED indication (LED1, LED2) found on the outdoor multi controller circuit board.
   LED indication : Set all contacts of SW1 to OFF.

- During normal operation
  The LED indicates the drive state of outdoor unit.

Bit	1	2	3	4	5	6	7	8
Indication	Compressor operated	52C	21S4	SV1	〈SV2〉	—	—	Always lit

〔Example〕
When the compressor and SV1 are on during cooling operation.

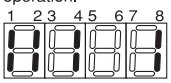

PUMY-P60NKMU3 (-BS)

SYMBOL	NAME
TB1	Terminal Block 〈Power Supply〉
TB3	Terminal Block 〈Indoor/Outdoor Transmission Line〉
TB7	Terminal Block 〈Centralized Control Transmission Line〉
MC	Motor for Compressor
MF1, MF2	Fan Motor
21S4	Solenoid Valve Coil 〈4-Way Valve〉
63H	High Pressure Switch
63HS	High Pressure Sensor
63LS	Low Pressure Sensor
SV1	Solenoid Valve Coil 〈Bypass Valve〉
TH2	Thermistor 〈Hic Pipe〉
TH3	Thermistor 〈Outdoor Liquid Pipe〉
TH4	Thermistor 〈Compressor〉
TH6	Thermistor 〈Suction Pipe〉
TH7	Thermistor 〈Ambient〉
TH8	Thermistor 〈Heat Sink〉
LEV-A, LEV-B	Linear Expansion Valve

SYMBOL	NAME
DCL1, DCL2, DCL3	Reactor
N.F.	Noise Filter Board
LI	Connection Terminal 〈L1-Phase〉
NI	Connection Terminal 〈L2-Phase〉
TB1, TB2	ConnectionTerminal 〈Power Circuit Board〉
EI, E2, E3, E4	ConnectionTerminal 〈Electrical Parts Box〉
P.B.	Power Circuit Board
TB3, TB4	ConnectionTerminal 〈Noise Filter Board〉
U/V/W	Connection Terminal 〈U/V/W-Phase〉
TB1A, TB2A, TB3A TB1B, TB2B, TB3B	Connection Terminal 〈Reactor〉
E5	ConnectionTerminal 〈Electrical Parts Box〉
IC500	Converter
IC600	Inverter
MULTI.B.	Multi Controller Circuit Board
SW1	Switch 〈Display Selection〉
SW2	Switch 〈Function/Model Selection〉
SW3	Switch 〈Test Run〉
SW4	Switch 〈Model Selection〉

SYMBOL	NAME
SW5	Switch 〈Function Selection〉
SW6	Switch 〈Function Selection〉
SW7	Switch 〈Function Selection〉
SW8	Switch 〈Model Selection〉
SW9	Switch 〈Function/Model Selection〉
SWU1	Switch 〈Unit Address Selection, ones digit〉
SWU2	Switch 〈Unit Address Selection, tens digit〉
SS	Connector 〈Connection for Option〉
CN3D	Connector 〈Connection for Option〉
CN3S	Connector 〈Connection for Option〉
CN3N	Connector 〈Connection for Option〉
CN51	Connector 〈Connection for Option〉
LED1, LED2	LED 〈Operation Inspection Display〉
LED3	LED 〈Power Supply to Main Microcomputer〉
F1, F2	Fuse 〈T6.3A L250V〉
X501～X505	Relay
M-NET P.B.	M-NET Power Circuit Board
TB1	ConnectionTerminal 〈Electrical Parts Box〉

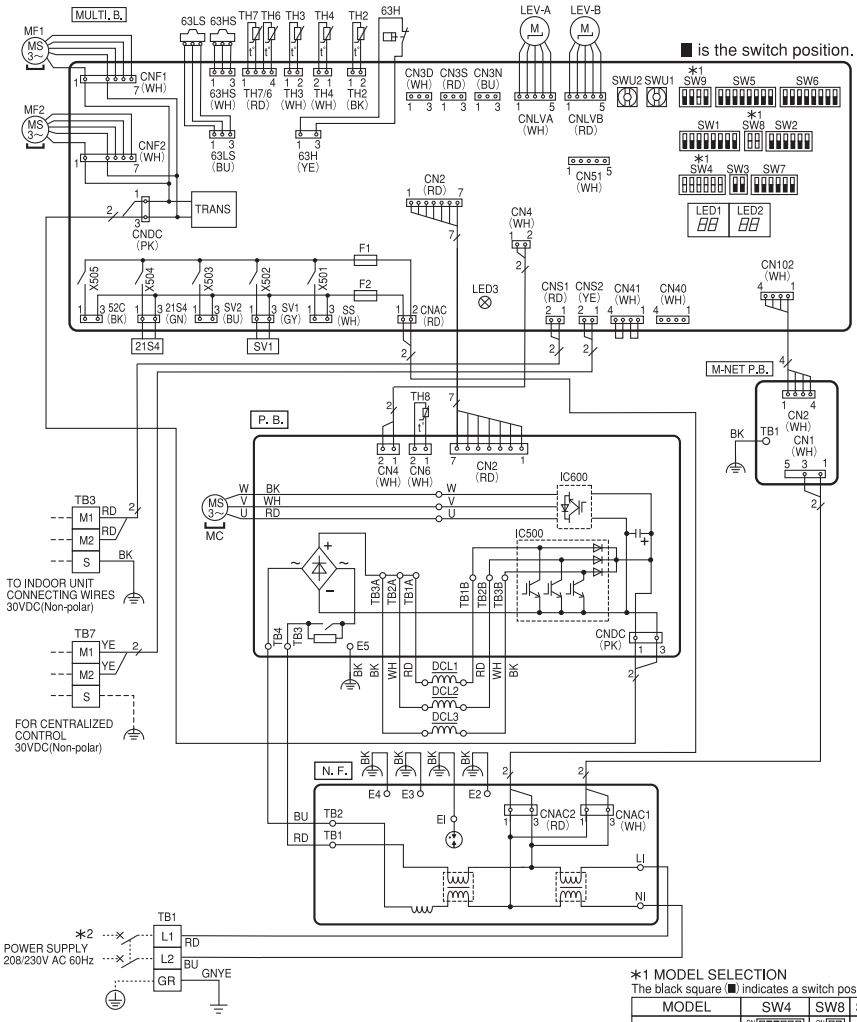

∗1 MODEL SELECTION
The black square (■) indicates a switch position.

MODEL	SW4	SW8	SW9
PUMY-P60NKMU3	ON OFF 1 2 3 4 5 6	ON OFF 1 2	ON OFF 3

∗2 Use copper supply wires.
Utiliser des fils d'alimentation en cuivre.

Cautions when Servicing

- ⚠ WARNING: When the main supply is turned off, the voltage in the main capacitor will drop to 20 VDC in approx. 2 minutes. When servicing, make sure that LED1, LED2 on the outdoor multi controller circuit board goes out, and then wait for at least 1 minute.
- Components other than the outdoor circuit boards may be faulty: Check and take corrective action, referring to the service manual. Do not replace the outdoor circuit boards without checking.

NOTES:
1.Refer to the wiring diagrams of the indoor units for details on wiring of each indoor unit.
2.Self-diagnosis function
The indoor and outdoor units can be diagnosed automatically using the self-diagnosis switch (SW1) and LED indication (LED1, LED2) found on the outdoor multi controller circuit board.
LED indication : Set all contacts of SW1 to OFF.

- During normal operation
The LED indicates the drive state of outdoor unit.

Bit	1	2	3	4	5	6	7	8
Indication	Compressor operated	52C	21S4	SV1	(SV2)	–	–	Always lit

〔Example〕
When the compressor and SV1 are on during cooling operation.

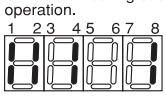

PUMY-HP36, 48NKMU1

SYMBOL	NAME
TB1	Terminal Block 〈Power Supply〉
TB3	Terminal Block 〈Indoor/Outdoor Transmission Line〉
TB7	Terminal Block 〈Centralized Control Transmission Line〉
MC	Motor for Compressor
MF1, MF2	Fan Motor
21S4	Solenoid Valve Coil 〈4-Way Valve〉
63H	High Pressure Switch
63HS	High Pressure Sensor
63LS	Low Pressure Sensor
SV1	Solenoid Valve Coil 〈Bypass Valve〉
SV2	Solenoid Valve Coil 〈Switching Valve〉
BH	Base Heater
THP	Thermal Protector
TH2	Thermistor 〈Hic Pipe〉
TH3	Thermistor 〈Outdoor Liquid Pipe〉
TH4	Thermistor 〈Compressor〉
TH6	Thermistor 〈Suction Pipe〉
TH7	Thermistor 〈Ambient〉

SYMBOL	NAME
TH8	Thermistor 〈Heat Sink〉
LEV-A, LEV-B	Linear Expansion Valve
DCL1, DCL2, DCL3	Reactor
N.F.	Noise Filter Board
LI	Connection Terminal 〈L1-Phase〉
NI	Connection Terminal 〈L2-Phase〉
TB1, TB2	ConnectionTerminal 〈Power Circuit Board〉
EI, E2, E3, E4	ConnectionTerminal 〈Electrical Parts Box〉
P.B.	Power Circuit Board
TB3, TB4	ConnectionTerminal 〈Noise Filter Board〉
U/V/W	Connection Terminal 〈U/V/W-Phase〉
TB1A, TB2A, TB3A TB1B, TB2B, TB3B	Connection Terminal 〈Reactor〉
E5	ConnectionTerminal 〈Electrical Parts Box〉
IC500	Converter
IC600	Inverter
MULTI.B.	Multi Controller Circuit Board
SW1	Switch 〈Display Selection〉
SW2	Switch 〈Function/Model Selection〉
SW3	Switch 〈Test Run〉

SYMBOL	NAME
SW4	Switch 〈Model Selection〉
SW5	Switch 〈Function Selection〉
SW6	Switch 〈Function Selection〉
SW7	Switch 〈Function Selection〉
SW8	Switch 〈Model Selection〉
SW9	Switch 〈Function/Model Selection〉
SWU1	Switch 〈Unit Address Selection, ones digit〉
SWU2	Switch 〈Unit Address Selection, tens digit〉
SS	Connector 〈Connection for Option〉
CN3D	Connector 〈Connection for Option〉
CN3S	Connector 〈Connection for Option〉
CN3N	Connector 〈Connection for Option〉
CN51	Connector 〈Connection for Option〉
LED1, LED2	LED 〈Operation Inspection Display〉
LED3	LED 〈Power Supply to Main Microcomputer〉
F1, F2	Fuse 〈T6.3A L250V〉
X501～X505	Relay
M-NET P.B.	M-NET Power Circuit Board
TB1	ConnectionTerminal 〈Electrical Parts Box〉

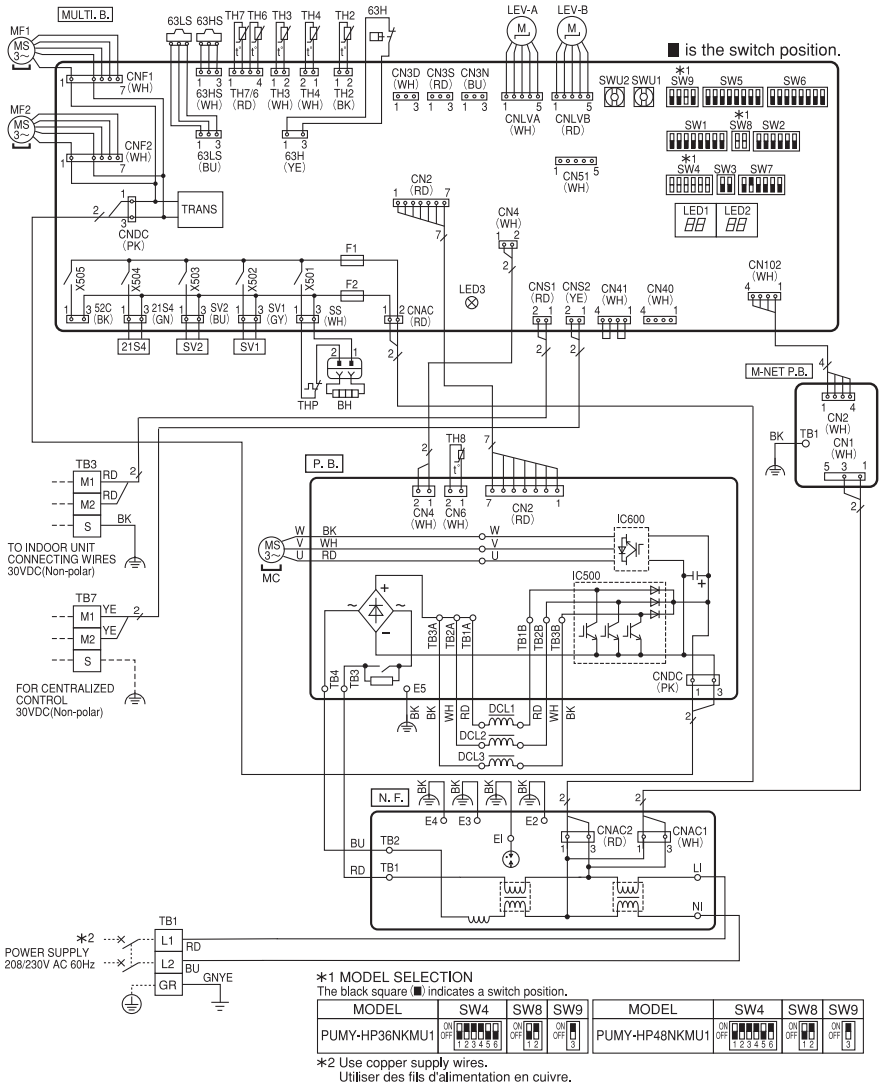

∗1 MODEL SELECTION
The black square (■) indicates a switch position.

MODEL	SW4	SW8	SW9
PUMY-HP36NKMU1	ON OFF 1 2 3 4 5 6	ON OFF 1 2	ON OFF 3
PUMY-HP48NKMU1	ON OFF 1 2 3 4 5 6	ON OFF 1 2	ON OFF 3

∗2 Use copper supply wires.
Utiliser des fils d'alimentation en cuivre.

Cautions when Servicing

- ⚠ WARNING: When the main supply is turned off, the voltage in the main capacitor will drop to 20 VDC in approx. 2 minutes. When servicing, make sure that LED1, LED2 on the outdoor multi controller circuit board goes out, and then wait for at least 1 minute.
- Components other than the outdoor circuit boards may be faulty: Check and take corrective action, referring to the service manual. Do not replace the outdoor circuit boards without checking.

NOTES:
1.Refer to the wiring diagrams of the indoor units for details on wiring of each indoor unit.
2.Self-diagnosis function
The indoor and outdoor units can be diagnosed automatically using the self-diagnosis switch (SW1) and LED indication (LED1, LED2) found on the outdoor multi controller circuit board.
LED indication : Set all contacts of SW1 to OFF.

- During normal operation
The LED indicates the drive state of outdoor unit.

Bit	1	2	3	4	5	6	7	8
Indication	Compressor operated	52C	21S4	SV1	SV2	—	—	Always lit

〔Example〕
When the compressor and SV1 are on during cooling operation.

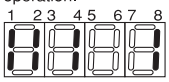

Measurement condition
PUMY-P36, 48, 60NKMU3(-BS)
PUMY-HP36, 48NKMU1

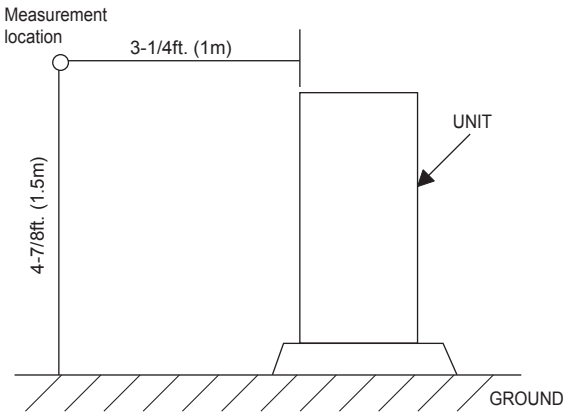

Sound level of PUMY-P60NKMU3(-BS)

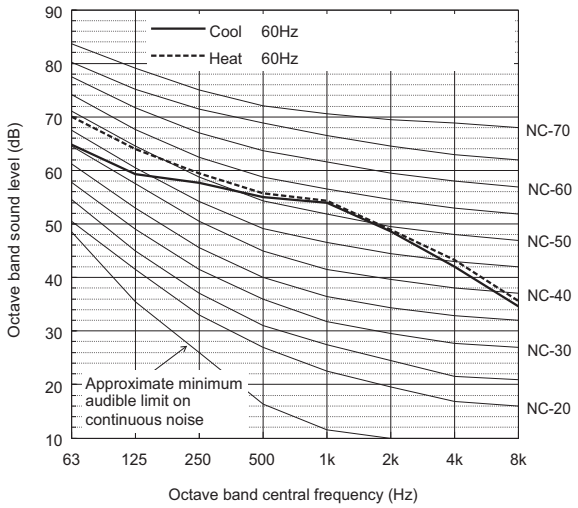

		63	125	250	500	1k	2k	4k	8k	dB(A)
Standard Cooling	60Hz	64.9	59.4	57.7	55.1	54.0	48.7	42.1	34.7	58.0
Standard Heating	60Hz	70.1	64.0	59.5	55.8	54.4	49.0	43.3	35.7	59.0

Sound level of PUMY-P36NKMU3(-BS), PUMY-HP36NKMU1

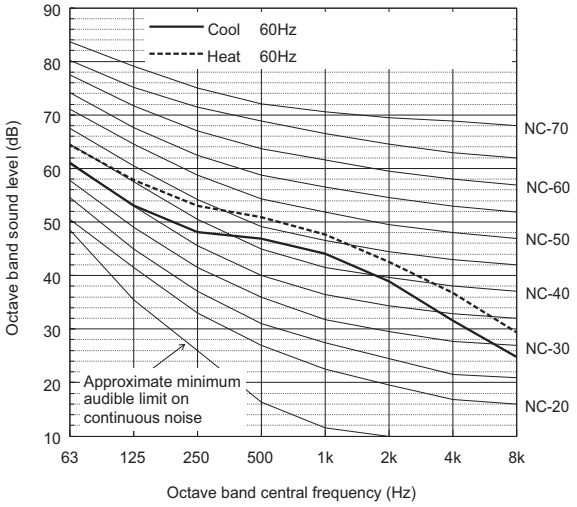

		63	125	250	500	1k	2k	4k	8k	dB(A)
Standard Cooling	60Hz	61.1	53.1	48.2	46.9	44.1	39.0	31.6	24.9	49.0
Standard Heating	60Hz	64.5	57.9	53.1	51.0	47.7	42.6	36.8	29.4	53.0

Sound level of PUMY-P48NKMU3(-BS), PUMY-HP48NKMU1

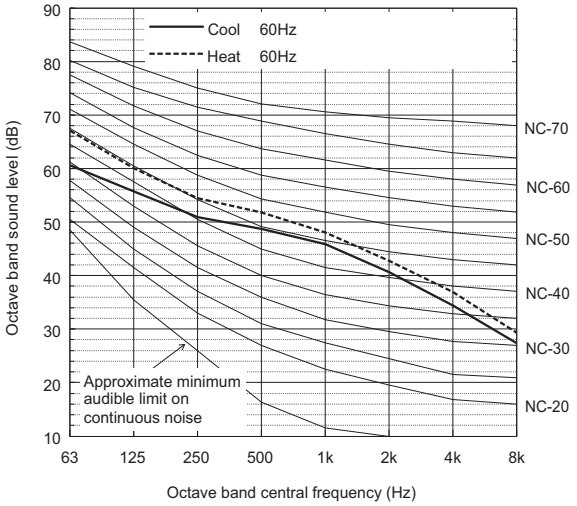

		63	125	250	500	1k	2k	4k	8k	dB(A)
Standard Cooling	60Hz	60.7	55.9	51.0	48.8	46.0	40.7	34.5	27.5	51.0
Standard Heating	60Hz	67.3	60.2	54.6	51.9	48.2	42.9	37.1	29.4	54.0

• **Cooling**

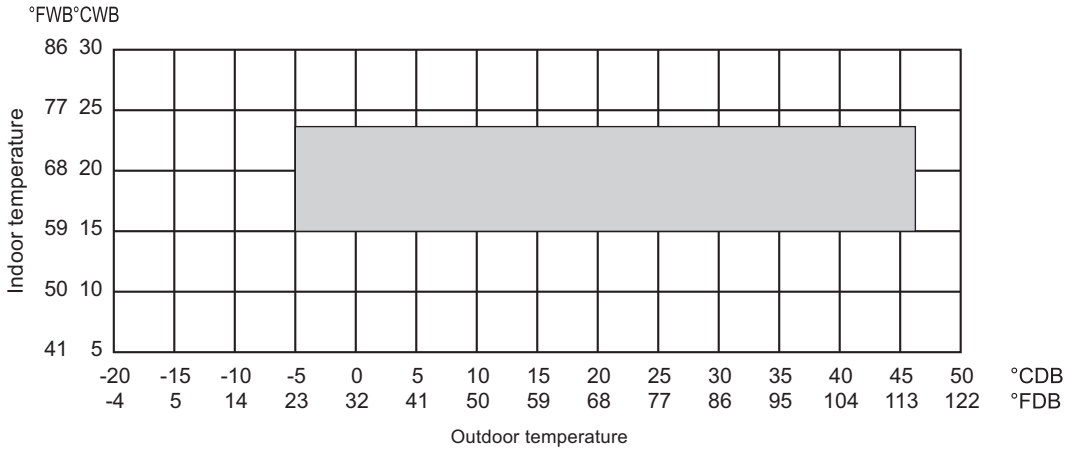

*50 to 115 ºF [10 to 46 ºC] D.B.: When connecting PKFY-P06NBMU, PKFY-P08NHMU, PKFY-P04/06/08/12NLMU, PFFY-P06/08/12NEMU, and PFFY-P06/08/12NRMU type indoor unit.
*5 to 115 °F (-15 to 46 ºC) D.B.: When using an optional front wind baffle.
However, this condition does not apply to the indoor units listed in the above note.

• **Heating**

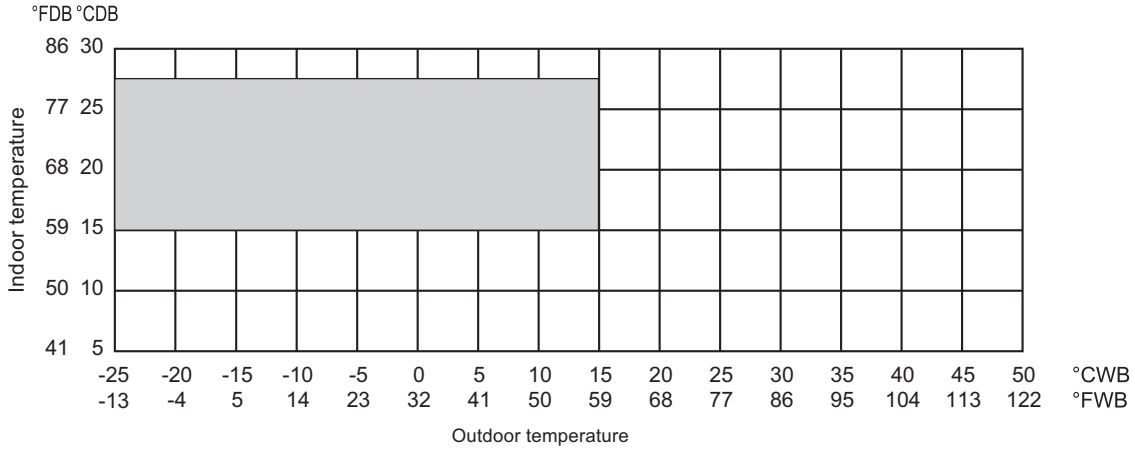

7-1. Selection of Cooling/Heating Units

How to determine the capacity when less than or equal 100% indoor model size units are connected in total:

The purpose of this flow chart is to select the indoor and outdoor units. For other purposes, this flow chart is intended only for reference.

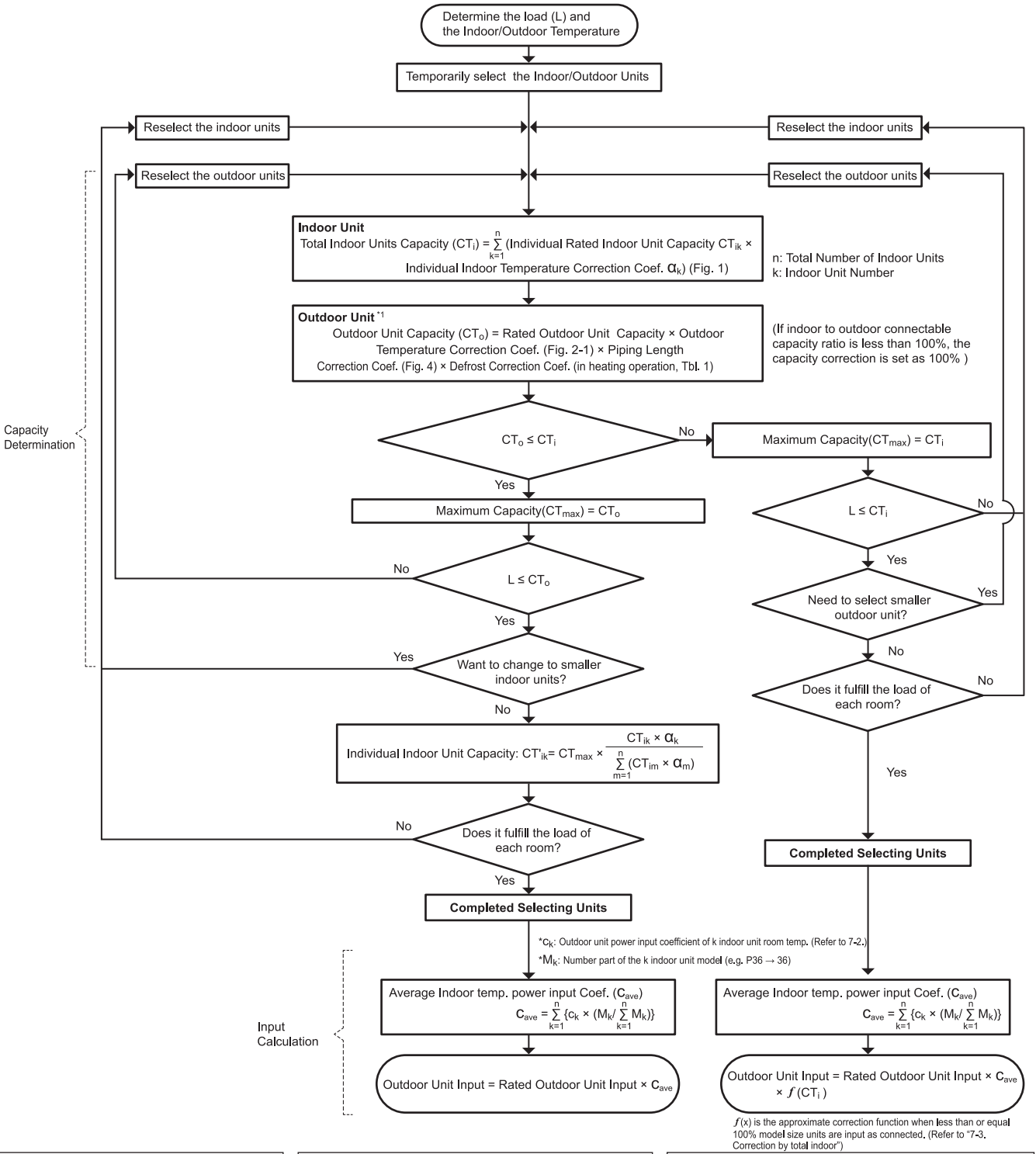

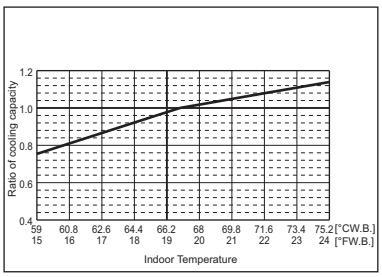

Fig.1 Indoor unit temperature correction

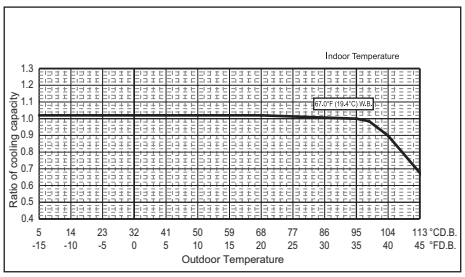

Fig.2-1 Outdoor unit temperature correction (capacity)

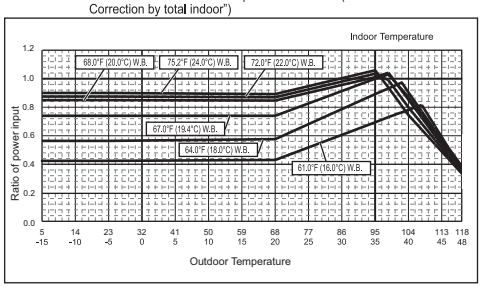

Fig.2-2 Outdoor unit temperature correction (power input)

How to determine the capacity when greater than 100% indoor model size units are connected in total:

The purpose of this flow chart is to select the indoor and outdoor units. For other purposes, this flow chart is intended only for reference.

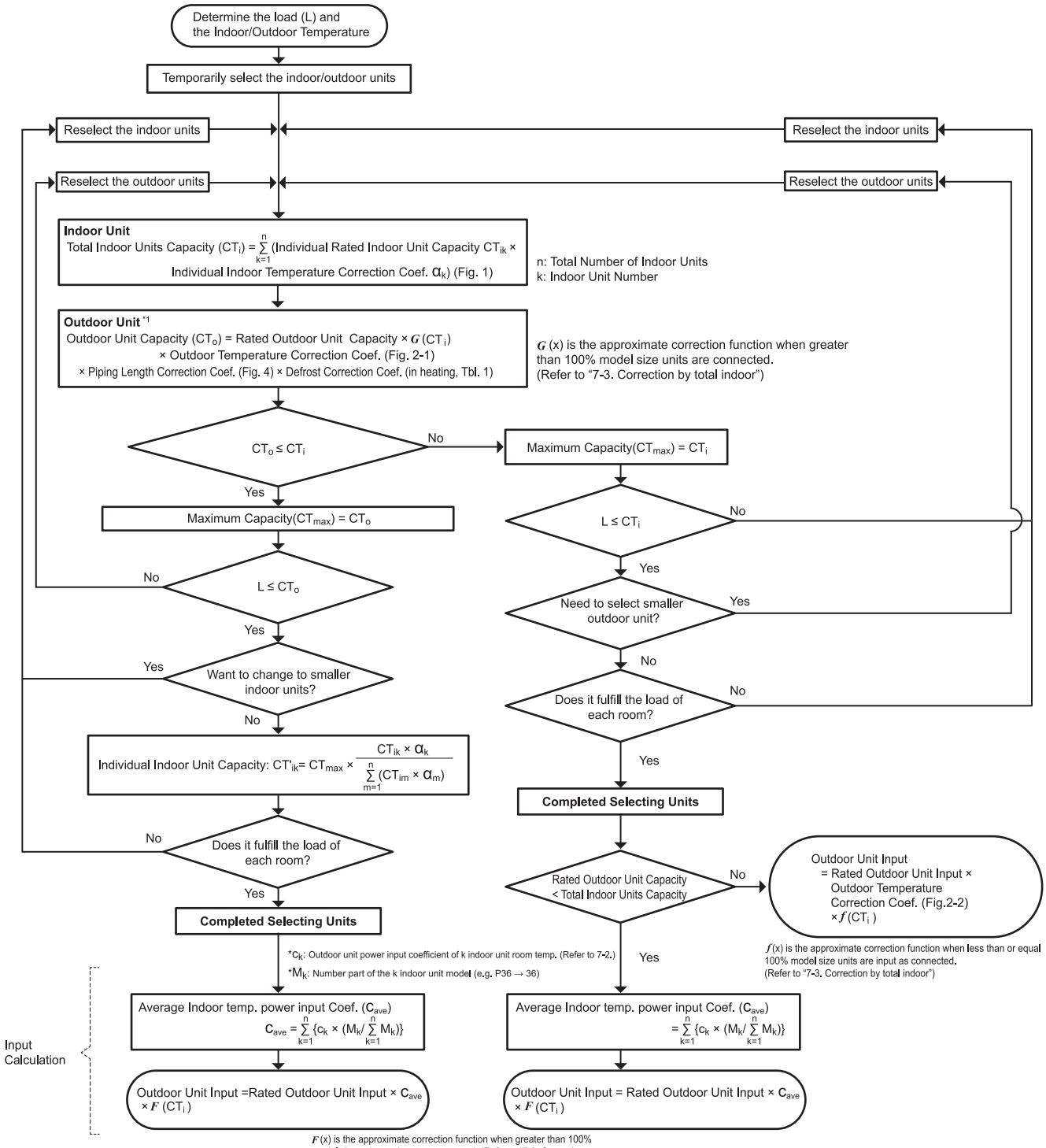

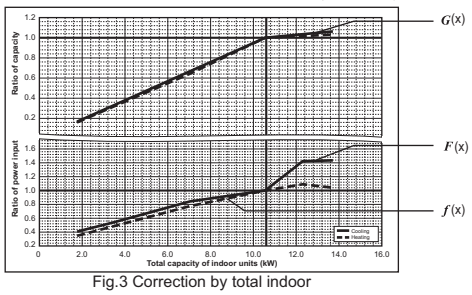

Fig.3 Correction by total indoor

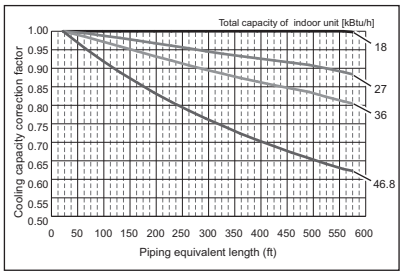

Fig.4 Correction of refrigerant piping length

<Cooling>

Design Condition	
Outdoor Design Dry Bulb Temperature	**98.6 ºF (37.0ºC)**
Total Cooling Load	**30.3 kBtu/h**
Room1	
Indoor Design Dry Bulb Temperature	**80.6 ºF (27.0ºC)**
Indoor Design Wet Bulb Temperature	**68.0 ºF (20.0ºC)**
Cooling Load	**13.6 kBtu/h**
Room2	
Indoor Design Dry Bulb Temperature	**75.2 ºF (24.0ºC)**
Indoor Design Wet Bulb Temperature	**66.2 ºF (19.0ºC)**
Cooling Load	**16.7 kBtu/h**
<Other>	
Indoor/Outdoor Equivalent Piping Length	**250 ft.**

1. Cooling Calculation

(1) Temporary Selection of Indoor Units

Room1

PEFY-P15 **15.0 kBtu/h (Rated)**

Room2

PEFY-P18 **18.0 kBtu/h (Rated)**

(2) Total Indoor Units Capacity

P15 + P18 = P33

(3) Selection of Outdoor Unit

The P36 outdoor unit is selected as total indoor units capacity is P33

PUMY-P36 **36.0 kBtu/h**

(4) Total Indoor Units Capacity Correction Calculation

Room1

Indoor Design Wet Bulb Temperature Correction (68.0ºF) 1.02 (Refer to Fig.1)

Room2

Indoor Design Wet Bulb Temperature Correction (66.2ºF) 0.95 (Refer to Fig.1)

Total Indoor Units Capacity (CT_i)

CT_i = Σ (Indoor Unit Rating × Indoor Design Temperature Correction)

= 15.0 × 1.02 + 18.0 × 0.95

≈ 32.4 kBtu/h

(5) Outdoor Unit Correction Calculation

Outdoor Design Dry Bulb Temperature Correction (98.6ºF) 0.98 (Refer to Fig.2)

Piping Length Correction (250 ft.) 0.93 (Refer to Fig.3)

Total Outdoor Unit Capacity (CT_o)

CT_o = Outdoor Rating × $G(CT_i)$*1 × Outdoor Design Temperature Correction × Piping Length Correction

= 36.0 × 0.98 × 0.93

≈ 32.8 kBtu/h

*1 $G(CT_i)$ is used only when greater than 100% indoor model size are connected in total, refer to "7-3 Correction by total indoor".

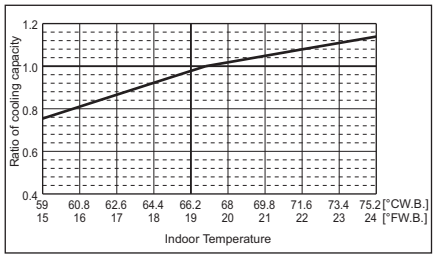

Fig.1 **Indoor unit temperature correction**
To be used to correct indoor unit only

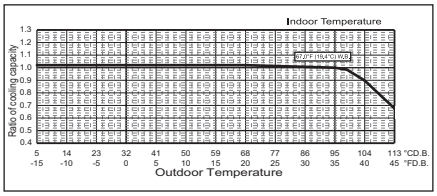

Fig.2 **Outdoor unit temperature correction**
To be used to correct outdoor unit only

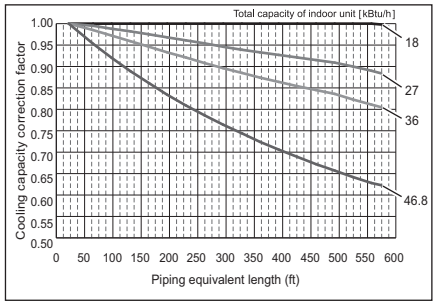

Fig.3 **Correction of refrigerant piping length**

(6) Determination of Maximum System Capacity (CT_{max})

Comparison of Capacity between Total Indoor Units Capacity (CT_i) and Total Outdoor Unit Capacity (CT_o)

CT_i = 32.4 < CT_o = 32.8, thus, select CT_i.

CT_{max} = CT_i = 32.4 kBtu/h

(7) Comparison with Essential Load

Against the essential load 30.3 kBtu/h, the maximum system capacity is 32.4 kBtu/h: Proper outdoor units have been selected.

(8) Calculation of Maximum Indoor Unit Capacity of Each Room

CT_{max} = CT_i, thus, calculate by the calculation below

Room1

Indoor Unit Rating × Indoor Design Temperature Correction

= 15.0 × 1.02

≈ 15.3 kBtu/h **OK: fulfills the load 13.6 kBtu/h**

Room2

Indoor Unit Rating × Indoor Design Temperature Correction

= 18.0 × 0.95

≈ 17.1 kBtu/h **OK: fulfills the load 16.7 kBtu/h**

Go on to the heating trial calculation since the selected units fulfill the cooling loads of Room 1, 2.

<Heating>

Design Condition	
Outdoor Design Wet Bulb Temperature	**35.6 ºF (2.0ºC)**
Total Heating Load	**34.4 kBtu/h**
Room1	
Indoor Design Dry Bulb Temperature	**69.8 ºF (21.0ºC)**
Heating Load	**16.3 kBtu/h**
Room2	
Indoor Design Dry Bulb Temperature	**73.4 ºF (23.0ºC)**
Heating Load	**18.1 kBtu/h**
<Other>	
Indoor/Outdoor Equivalent Piping Length	**328 ft.**

2. Heating Calculation

(1) Temporary Selection of Indoor Units

Room1

PEFY-P15 **17.0 kBtu/h (Rated)**

Room2

PEFY-P18 **20.0 kBtu/h (Rated)**

(2) Total Indoor Units Capacity

P15 + P18 = P33

(3) Selection of Outdoor Unit

The P36 outdoor unit is selected as total indoor units capacity is P33

PUMY-P36 **42.0 kBtu/h**

(4) Total Indoor Units Capacity Correction Calculation

Room1

Indoor Design Dry Bulb Temperature Correction (69.8ºF) 1.00 (Refer to Fig.4)

Room2

Indoor Design Dry Bulb Temperature Correction (73.4ºF) 0.92 (Refer to Fig.4)

Total Indoor Units Capacity (CT_i)

CT_i = Σ (Indoor Unit Rating × Indoor Design Temperature Correction)

= 17.0 × 1.00 + 20.0 × 0.92

= 35.4 kBtu/h

(5) Outdoor Unit Correction Calculation

Outdoor Design Wet Bulb Temperature Correction (35.6ºF) 1.00 (Refer to Fig.5)

Piping Length Correction (328 ft.) 0.94 (Refer to Fig.6)

Defrost Correction 0.89 (Refer to Tbl.1)

Total Outdoor Unit Capacity (CT_o)

CT_o = Outdoor Unit Rating × G(CT_i)*1 × Design Temperature Correction × Piping Length Correction × Defrost Correction

= 42.0 × 1.00 × 0.94 × 0.89

≈ 35.1 kBtu/h

*1 G(CT_i) is used only when greater than 100% indoor model size are connected in total, refer to "7-3 Correction by total indoor".

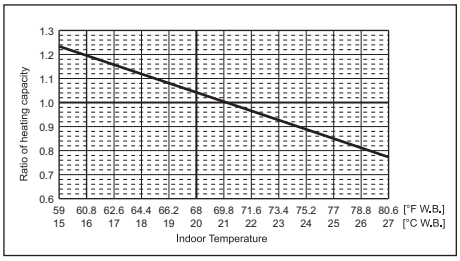

Fig.4 **Indoor unit temperature correction**
To be used to correct indoor unit only

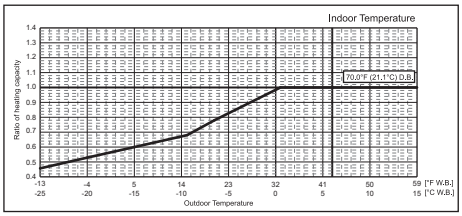

Fig.5 **Outdoor unit temperature correction**
To be used to correct outdoor unit only

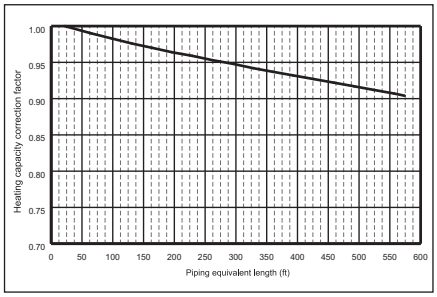

Fig.6 **Correction of refrigerant piping length**

(6) Determination of Maximum System Capacity (CT_{max})

Comparison of Capacity between Total Indoor Units Capacity (CT_i) and Total Outdoor Unit Capacity (CT_o)

CT_i = 35.4 > CT_o = 35.1, thus, select CT_o.

CT_{max} = CT_o = 35.1 kBtu/h

(7) Comparison with Essential Load

Against the essential load 34.4 kBtu/h, the maximum system capacity is 35.1 kBtu/h: Proper outdoor units have been selected.

(8) Calculation of Maximum Indoor Unit Capacity of Each Room

CT_{max} = CT_i, thus, calculate by the calculation below

Room1

Maximum Capacity × Room1 Capacity after the Temperature Correction/Room1,2 Total Capacity after the Temperature Correction

= 35.1 × (17.0 × 1.00)/(17.0 × 1.00 + 20.0 × 0.92)

= 16.9 kBtu/h **OK: fulfills the load 16.3 kBtu/h**

Room2

Maximum Capacity × Room2 Capacity after the Temperature Correction/Room1,2 Total Capacity after the Temperature Correction

= 35.1 × (20.0 × 0.92)/(17.0 × 1.00 + 20.0 × 0.92)

= 18.2 kBtu/h **OK: fulfills the load 18.1 kBtu/h**

Completed selecting units since the selected units fulfill the heating loads of Room 1, 2.

Tbl.1 Table of correction factor at frost and defrost

Outdoor inlet air temp. °FWB	43	39	36	32	28	25	21	18	14	5	-4	-13
Outdoor inlet air temp. °CWB	6	4	2	0	-2	-4	-6	-8	-10	-15	-20	-25
Correction factor	1.00	0.98	0.89	0.88	0.89	0.90	0.95	0.95	0.95	0.95	0.95	0.95

3. Power input of outdoor unit

<Cooling>

(1) Rated power input of outdoor unit **2.31 kW (Nominal)**

(2) Calculation of the average indoor temperature power input coefficient

Coefficient of the outdoor unit for indoor unit 1 (Outdoor temp. 98.6°F [37.0°C]D.B., Indoor temp. 68.0°F [20.0°C]W.B.)
1.04 (Refer to "7-2. Correction by temperature".)

Coefficient of the outdoor unit for indoor unit 2 (Outdoor temp. 98.6°F [37.0°C]D.B., Indoor temp. 64.4°F [18.0°C]W.B.)
0.85 (Refer to "7-2. Correction by temperature".)

Average indoor temp. power input coefficient (C_{ave}) = $\sum_{k=1}^{n}\{c_k \times (M_k/\sum_{k=1}^{n} M_k)\}$

n: Total number of the indoor units
k: Number of the indoor unit
c_k: Outdoor unit power input coefficient of k indoor unit room temp.
M_k: Number part of the k indoor unit model (e.g. P36 → 36)

= 1.04 × 15/(15 + 18) + 0.85 × 18/(15 + 18)
= 0.94

(3) Coefficient of the partial load $f(CT_i)$

Total Indoor units capacity
15 kBtu/h (4.4 kW) + 18 kBtu/h (5.3 kW) = 33 kBtu/h (9.7 kW) , thus, $f(CT_i)$ =0.9
(Refer to the tables in **"7-3. Correction by total indoor"**.)

(4) Outdoor power input (PIo)

Maximum System Capacity (CT_{max}) = Total Outdoor unit Capacity (CT_o), so use the following formula
PIo = Outdoor unit Cooling Rated Power Input × Correction Coefficient of Indoor temperature × $f(CT_i)$
= 2.31 × 0.94 × 0.9
≈ 1.95 kW

<Heating>

(1) Rated power input of outdoor unit **3.02 kW (Nominal)**

(2) Calculation of the average indoor temperature power input coefficient

Coefficient of the outdoor unit for indoor unit 1 (Outdoor temp. 26.6°F [-3°C]W.B., Indoor temp. 70°F [21.1°C]D.B.)
1.16 (Refer to "7-2. Correction by temperature".)

Coefficient of the outdoor unit for indoor unit 2 (Outdoor temp. 26.6°F [-3°C]W.B., Indoor temp. 78.8°F [26°C]D.B.)
1.09 (Refer to "7-2. Correction by temperature".)

Average indoor temp. power input coefficient (C_{ave}) = $\sum_{k=1}^{n} \{c_k \times (M_k / \sum_{k=1}^{n} M_k)\}$

n: Total number of the indoor units
k: Number of the indoor unit
c_k: Outdoor unit power input coefficient of k indoor unit room temp.
M_k: Number part of the k indoor unit model (e.g. P36 → 36)

= 1.16 × 15/(15 + 18) + 1.09 × 18/(15 + 18)
= 1.12

(3) Coefficient of the partial load $f(CT_i)$

Total Indoor units capacity
15 kBtu/h (4.4 kW) + 18 kBtu/h (5.3 kW) = 33 kBtu/h (9.7 kW), thus, (CT_i) =0.9
(Refer to the tables in **"7-3. Correction by total indoor"**.)

(4) Outdoor power input (PIo)

Maximum System Capacity (CT_{max}) = Total Outdoor unit Capacity (CT_i), so use the following formula
PIo = Outdoor unit Cooling Rated Power Input × Correction Coefficient of Indoor temperature × $f(CT_i)$
= 3.02 × 1.12 × 0.9
≈ 3.04 kW

7-2. Correction by temperature

CITY MULTI could have varied capacity at different designing temperature. Using the nominal cooling/heating capacity value and the ratio below, the capacity can be observed at various temperature.

PUMY-			P36NKMU3	P48NKMU3	P60NKMU3
Nominal Cooling capacity		Btu/h	36,000	48,000	60,000
		kW	10.6	14.1	17.6
	Input	kW	2.310	3.545	4.390

Indoor unit temperature correction

To be used to correct indoor unit capacity only

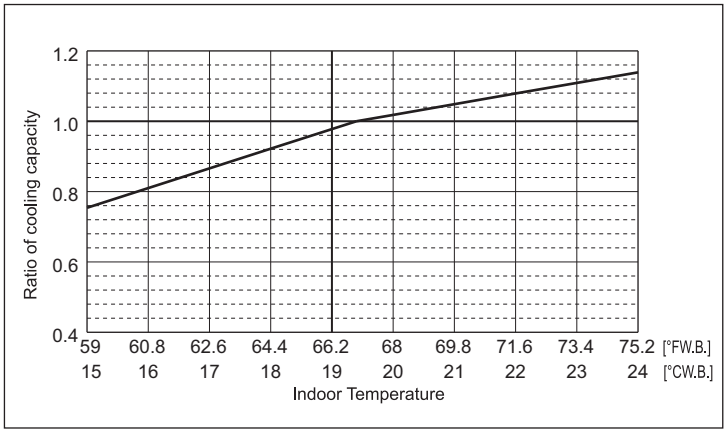

Outdoor unit temperature correction

To be used to correct outdoor unit only

Outdoor unit capacity is NOT affected by the indoor temperature.

Outdoor unit power input is affected by the indoor and outdoor temperatures. Please consult the sales office for details.

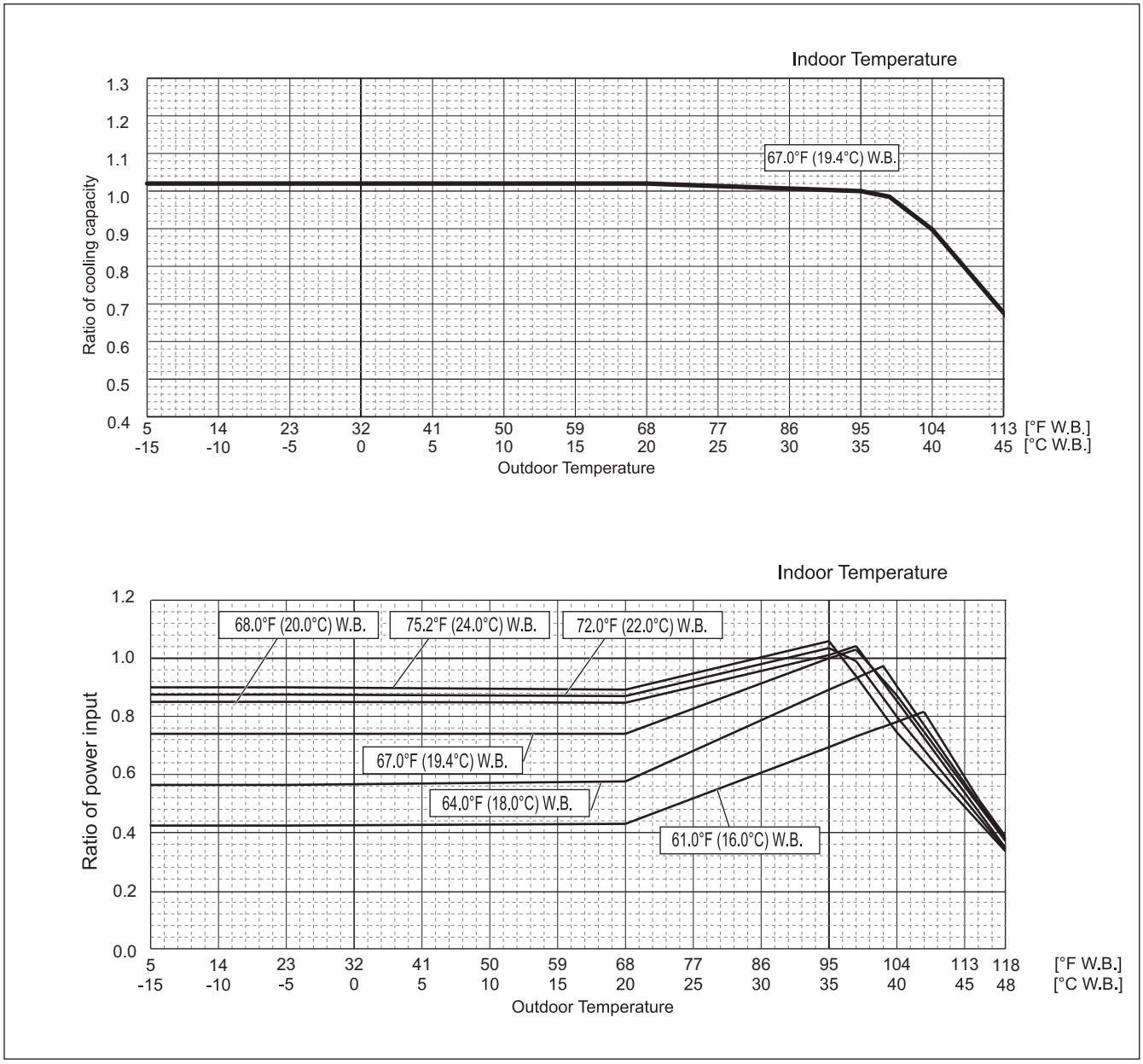

PUMY-			P36NKMU3	P48NKMU3	P60NKMU3
Nominal Heating capacity		Btu/h	42,000	54,000	60,000
		kW	12.3	15.8	19.3
	Input	kW	3.020	3.880	4.640

Indoor unit temperature correction

To be used to correct indoor unit capacity only

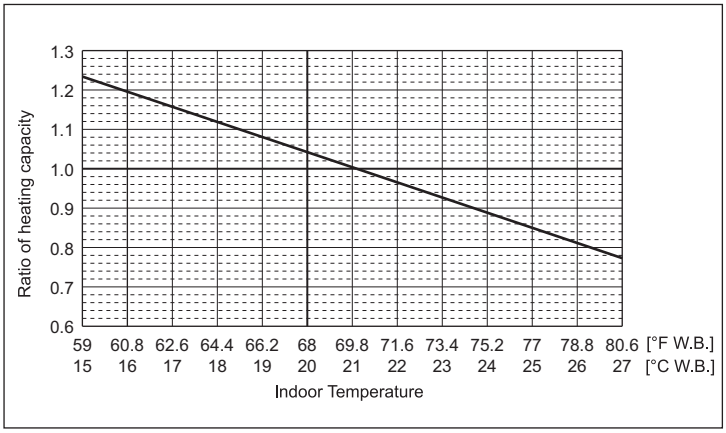

Outdoor unit temperature correction

To be used to correct outdoor unit only

Outdoor unit capacity is NOT affected by the indoor temperature.
Outdoor unit power input is affected by the indoor and outdoor temperatures. Please consult the sales office for details.

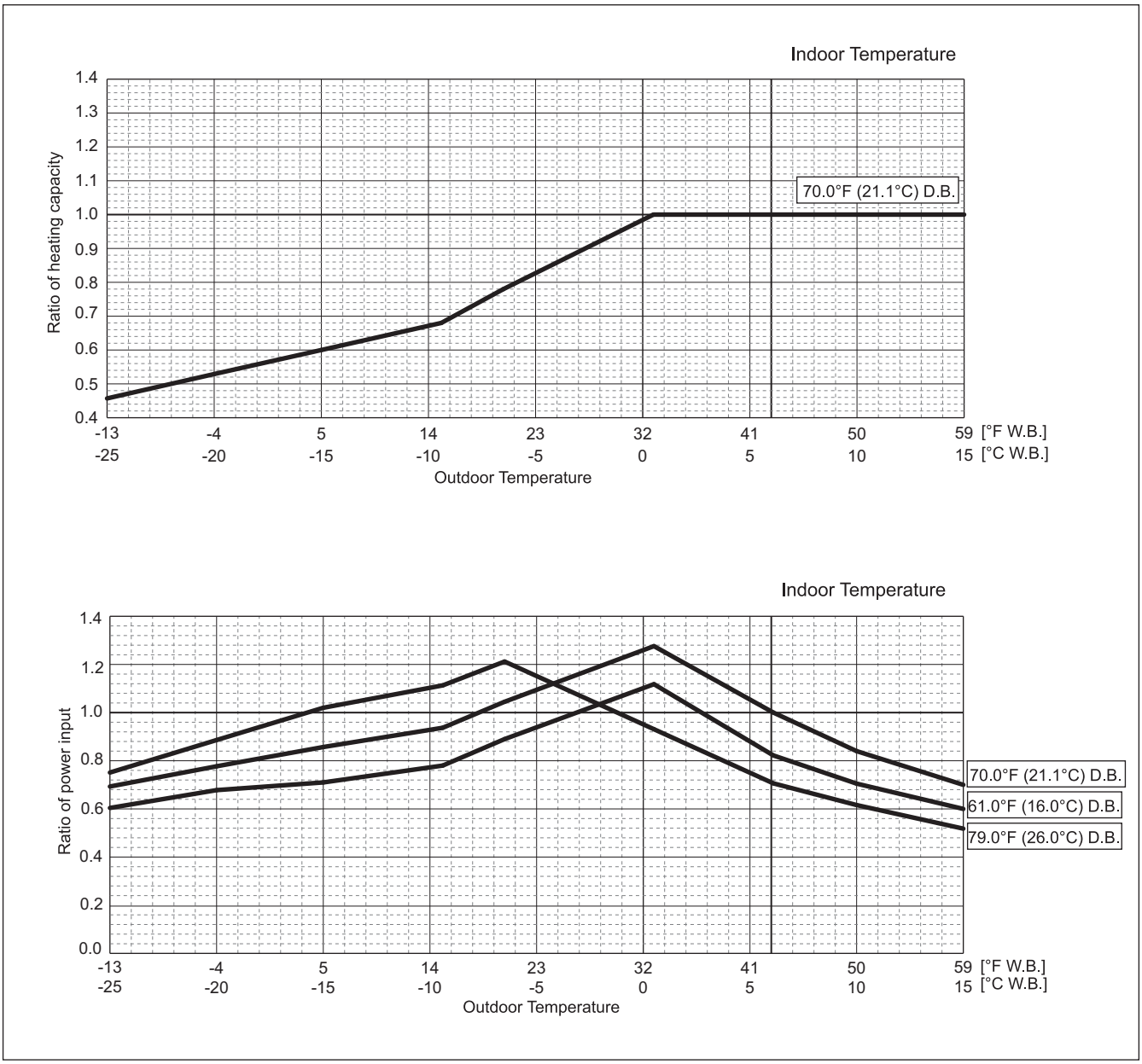

PUMY-			HP36NKMU1	HP48NKMU1
Nominal Cooling capacity		Btu/h	36,000	48,000
		kW	10.6	14.1
	Input	kW	2.310	3.545

Indoor unit temperature correction

To be used to correct indoor unit capacity only

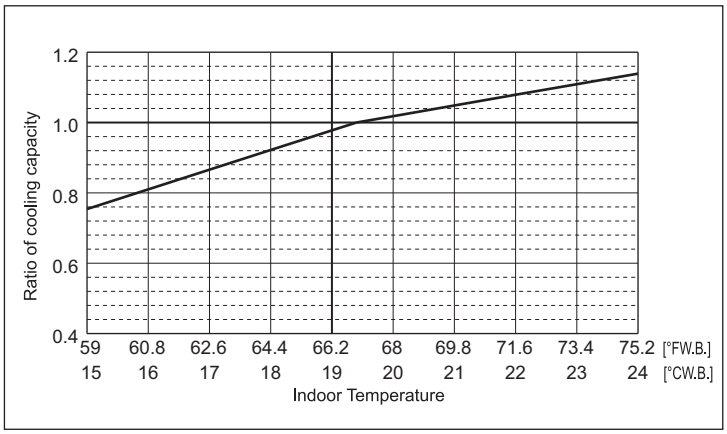

Outdoor unit temperature correction

To be used to correct outdoor unit only

Outdoor unit capacity is NOT affected by the indoor temperature.
Outdoor unit power input is affected by the indoor and outdoor temperatures. Please consult the sales office for details.

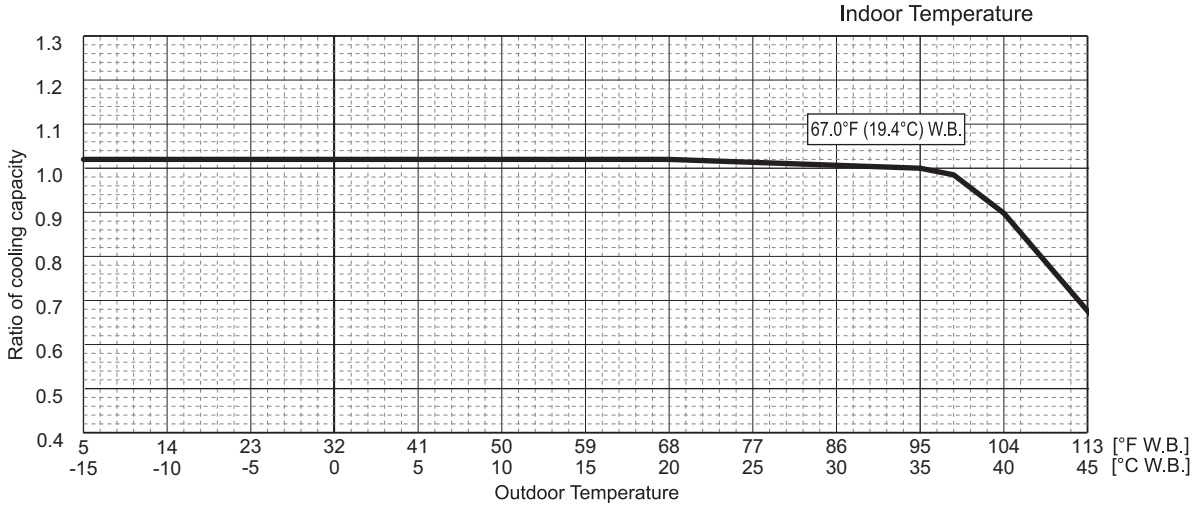

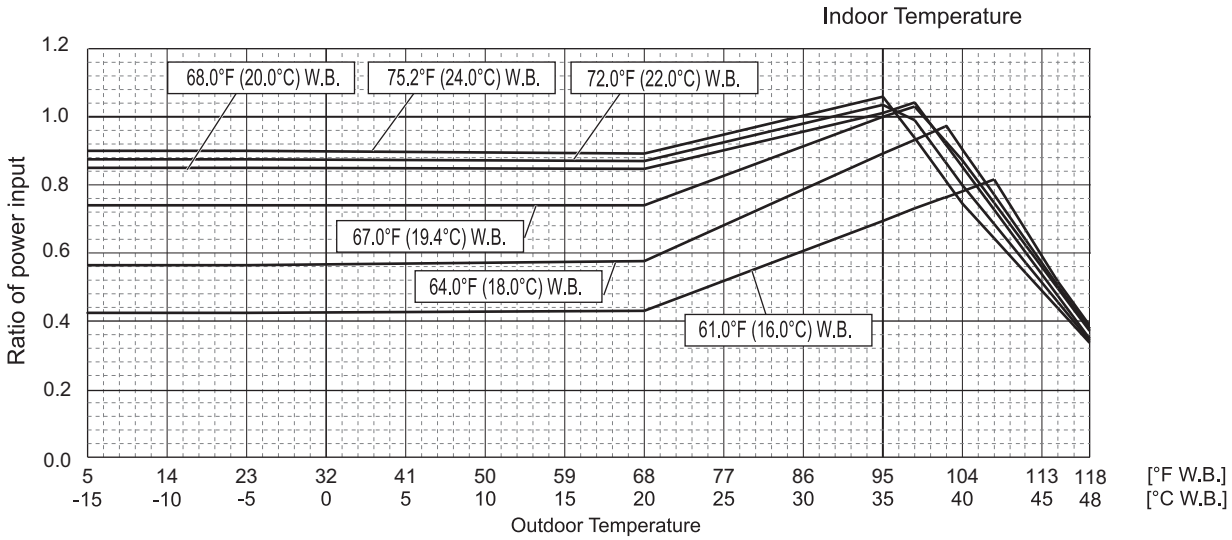

PUMY-			HP36NKMU1	HP48NKMU1
Nominal Heating capacity		Btu/h	42,000	54,000
		kW	12.3	15.8
	Input	kW	3.020	3.880

Indoor unit temperature correction

To be used to correct indoor unit capacity only

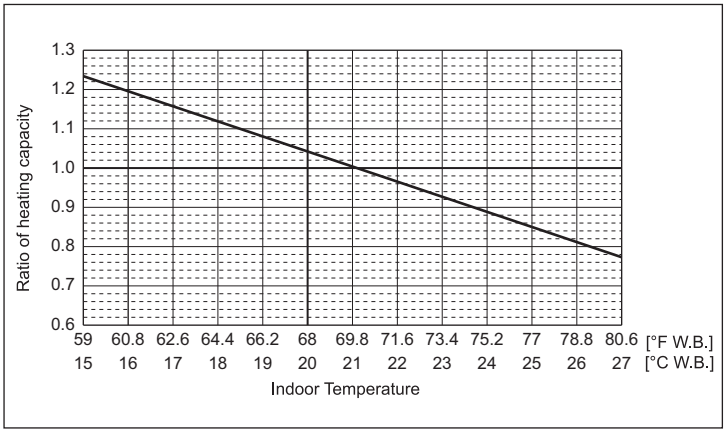

Outdoor unit temperature correction

To be used to correct outdoor unit only

Outdoor unit capacity is NOT affected by the indoor temperature.

Outdoor unit power input is affected by the indoor and outdoor temperatures. Please consult the sales office for details.

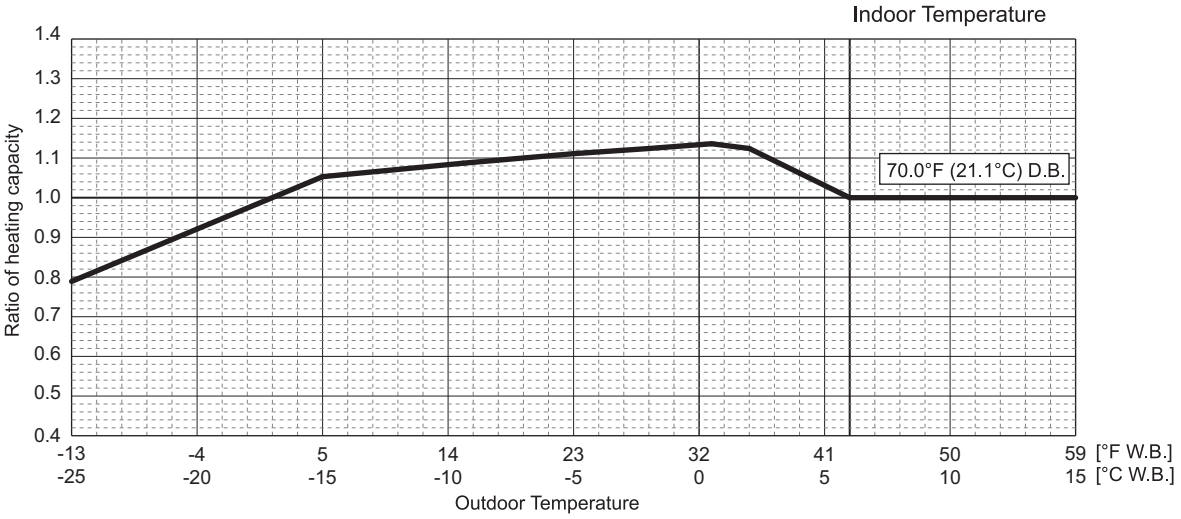

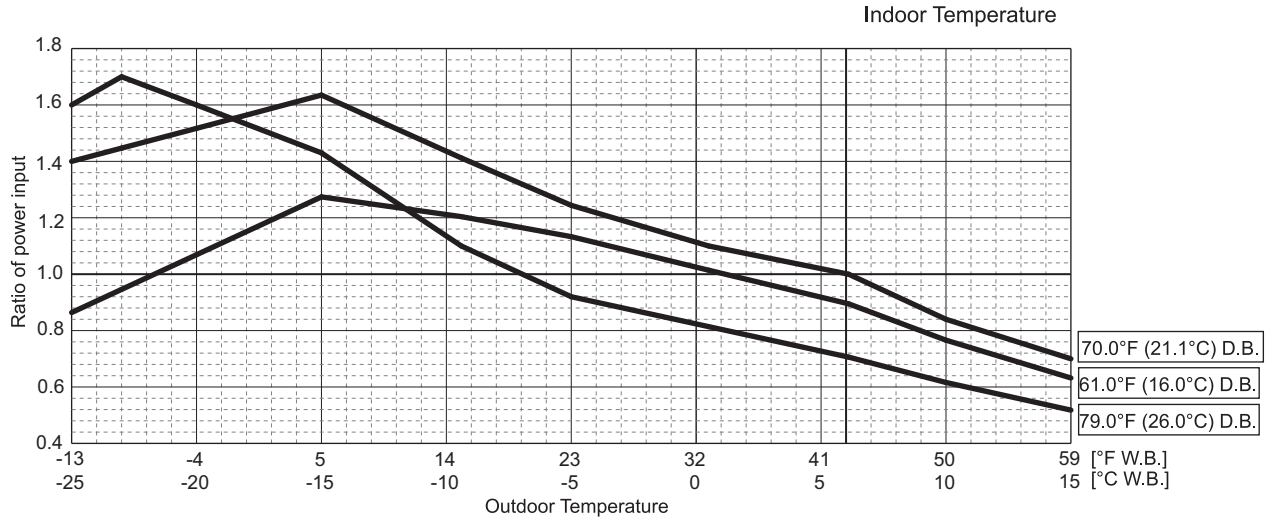

7-3. Correction by total indoor

CITY MULTI system have different capacities and inputs when many combinations of indoor units with different total capacities are connected. Using following tables, the maximum capacity can be found to ensure the system is installed with enough capacity for a particular application.

PUMY-			P36NKMU3, HP36NKMU1
Nominal cooling capacity		Btu/h	36,000
		kW	10.6
	Input	kW	2.310

PUMY-			P36NKMU3, HP36NKMU1
Nominal Heating capacity		Btu/h	42,000
		kW	12.3
	Input	kW	3.020

PUMY-P36NKMU3/PUMY-HP36NKMU1

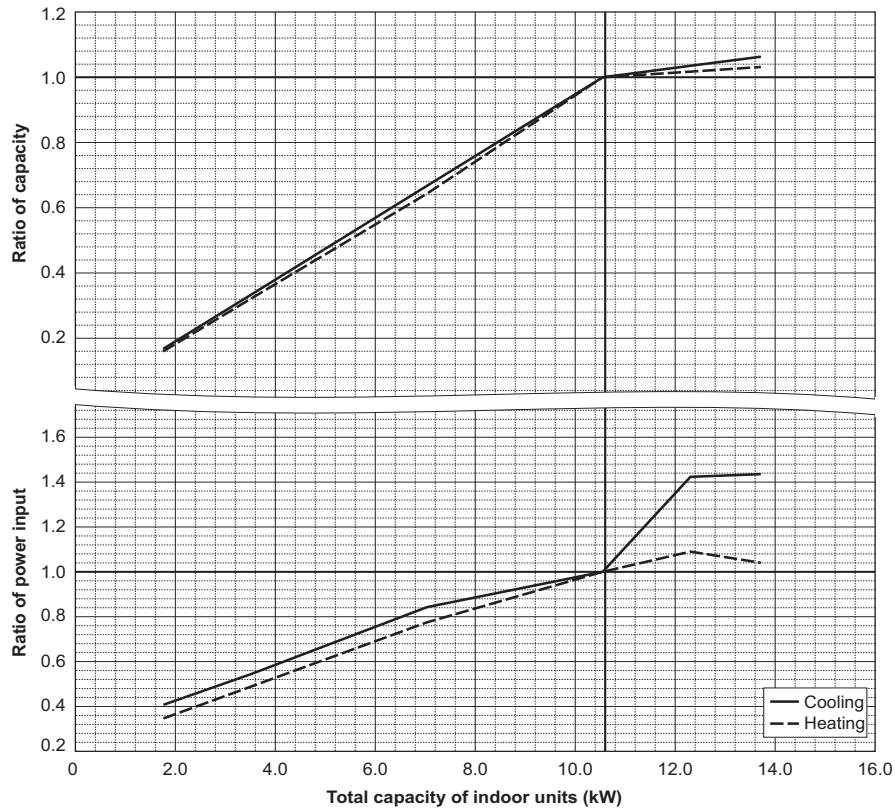

PUMY-			P48NKMU3, HP48NKMU1
Nominal cooling capacity		Btu/h	48,000
		kW	14.1
	Input	kW	3.545

PUMY-			P48NKMU3, HP48NKMU1
Nominal Heating capacity		Btu/h	54,000
		kW	15.8
	Input	kW	3.880

PUMY-P48NKMU3/PUMY-HP48NKMU1

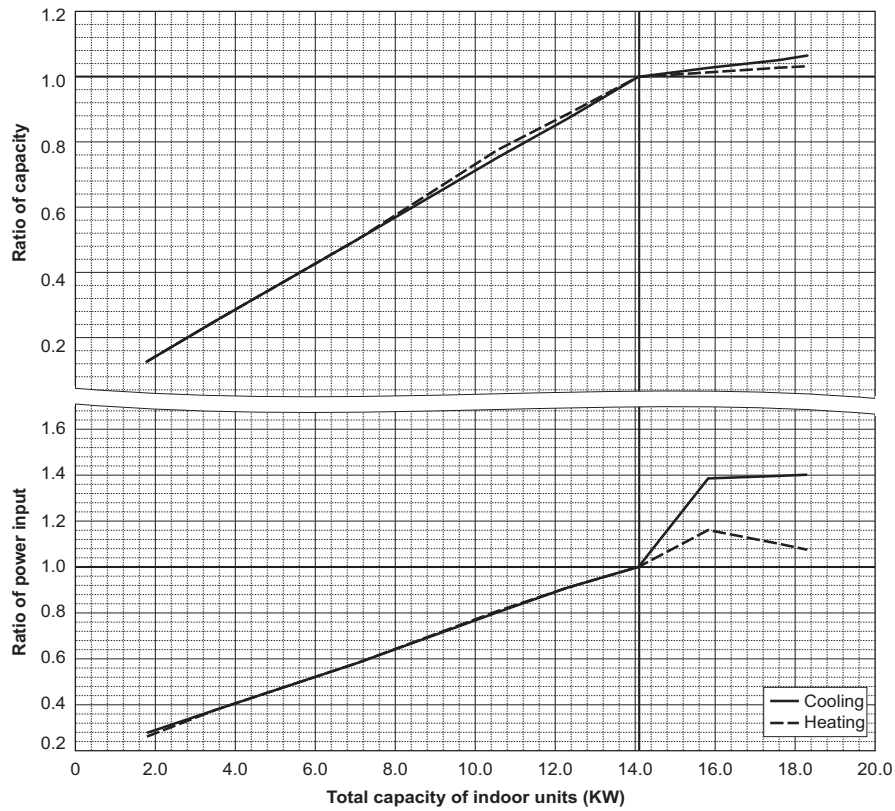

PUMY-			P60NKMU3
Nominal cooling capacity		Btu/h	60,000
		kW	17.6
	Input	kW	4.390

PUMY-			P60NKMU3
Nominal Heating capacity		Btu/h	66,000
		kW	19.3
	Input	kW	4.640

PUMY-P60NKMU3

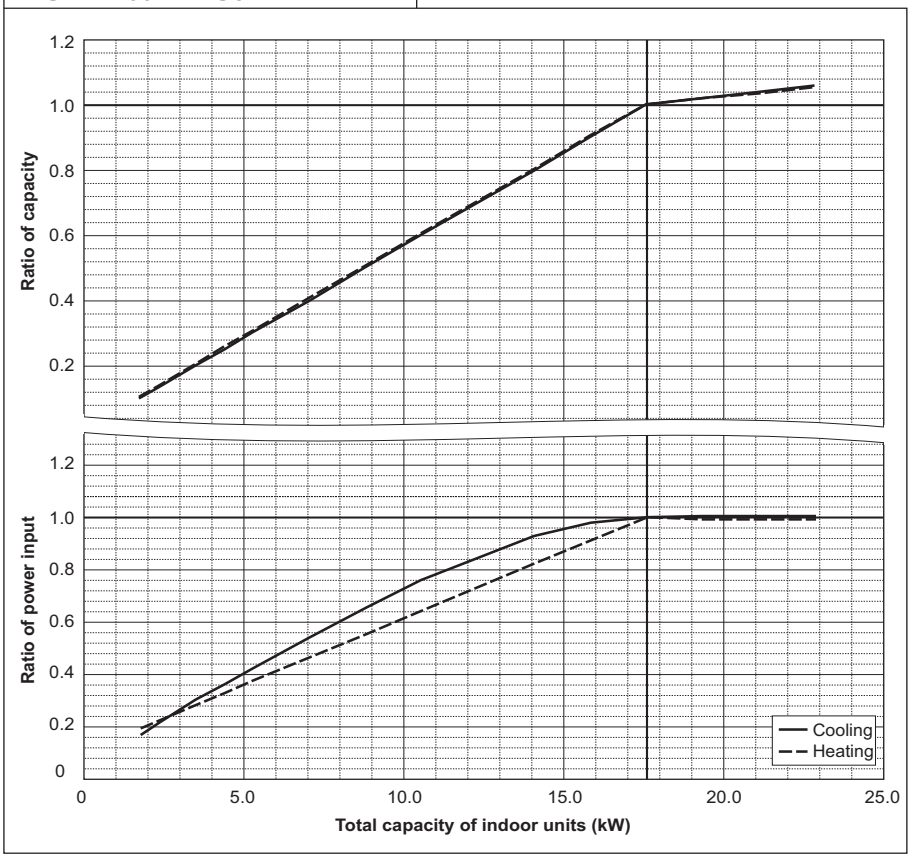

7-4. Correction by refrigerant piping length

CITY MULTI systems can have extended piping lengths if certain limitations are followed, but cooling/heating capacity could be reduced. Using following correction factor by equivalent piping length shown at 7-4-1 and 7-4-2, capacity can be found. 7-4-3 shows how to obtain the equivalent piping length.

7-4-1. Cooling capacity correction

PUMY-P36NKMU3(-BS), PUMY-HP36NKMU1

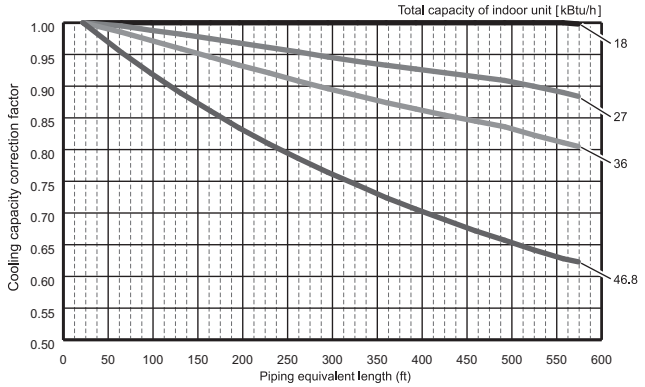

PUMY-P48NKMU3(-BS), PUMY-HP48NKMU1

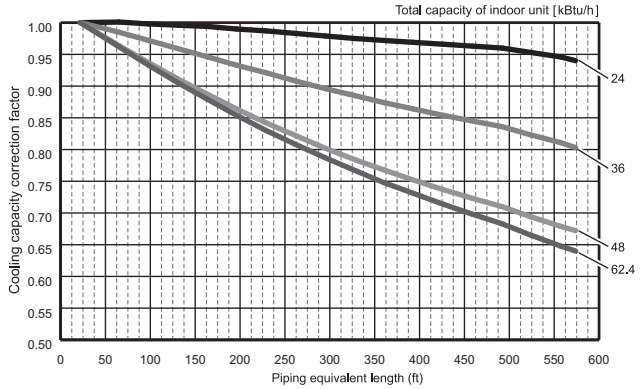

PUMY-P60NKMU3(-BS)

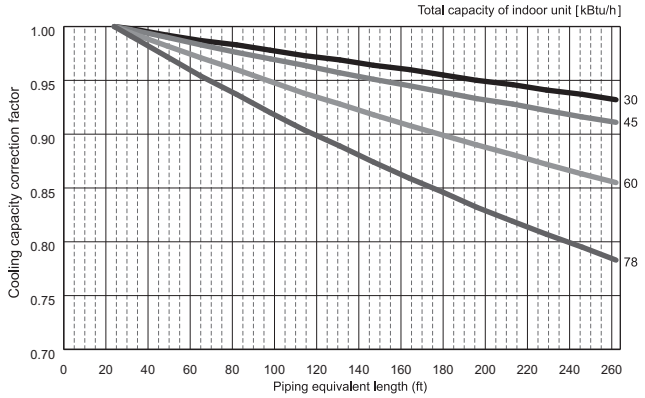

7-4-2. Heating capacity correction

PUMY-P36, 48NKMU3(-BS), PUMY-HP36,48NKMU1

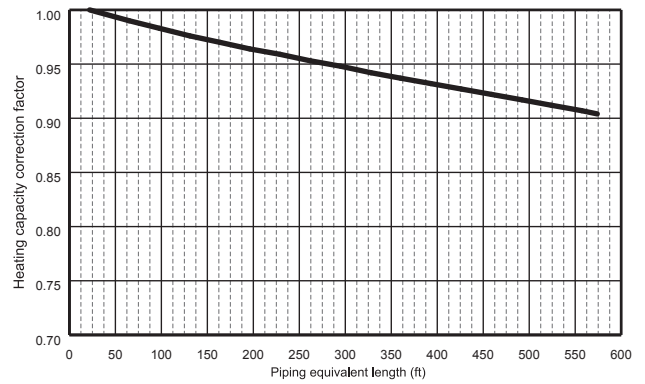

PUMY-P60NKMU3(-BS)

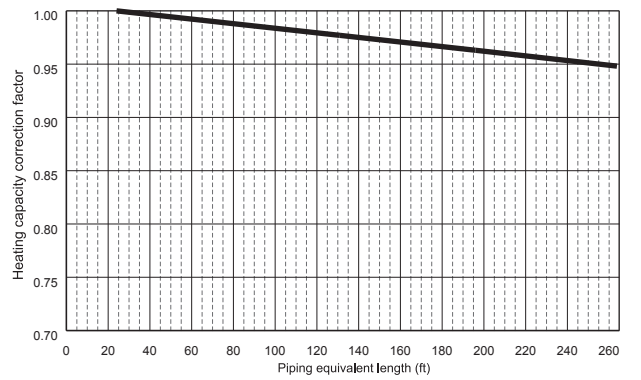

7-4-3. How to obtain the equivalent piping length

Equivalent length [m]= (Actual piping length to the farthest indoor unit) + (0.30 x number of bends in the piping)
Equivalent length [ft.]= (Actual piping length to the farthest indoor unit) + (0.99 x number of bends in the piping)

7-5. Correction at frost and defrost

Due to frost at the outdoor heat exchanger and the automatic defrost operation, the heating capacity of the outdoor unit can be calculated by multiplying the correction factor shown in the table below.

Table of correction factor at frost and defrost

Outdoor inlet air temp. °FWB	43	39	36	32	28	25	21	18	14	5	-4	-13
Outdoor inlet air temp. °CWB	6	4	2	0	-2	-4	-6	-8	-10	-15	-20	-25
Correction factor	1.00	0.98	0.89	0.88	0.89	0.90	0.95	0.95	0.95	0.95	0.95	0.95

* The correction factors in the table above are used for a full-load and above.
Use the formula below to calculate the correction factor to use for a partial load.
Correction factor for partial load: K
Correction factor for a full load and above: K_0
Partial load factor: A

$$K = 1 - (1 - K_0) \times A$$

8-1. JOINT

CITY MULTI units can be easily connected by using Joint sets and Header sets provided by Mitsubishi Electric. One kind of Joint sets are available for use. Refer to section "Piping Design" or the Installation Manual that comes with the Joint set for how to install the Joint set.

CMY-Y62-G

1. Specification

Items		Details
Main	Number of ports	2 ports
	Number of branch joints	One for each liquid and gas pipe
	Pipe material	Phosphorus deoxidized copper C1220T-OL (JIS H3300)
Accessory	Insulation material	Foamed polyethylene (one for each liquid and gas pipe)
	Reducer	10 reducers of 7 types (Refer to the external drawing for details.)

2. External drawing

For liquid pipe:

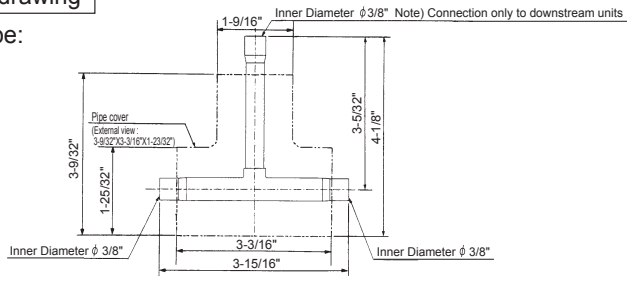

Reducer (Accessory):

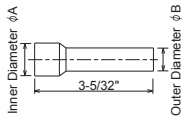

A (Inner Diameter)	B (Outer Diameter)	Number of reducers
ϕ 1/2"	ϕ 3/8"	2
ϕ 3/4"	ϕ 5/8"	1
ϕ 7/8"	ϕ 3/4"	1

For gas pipe:

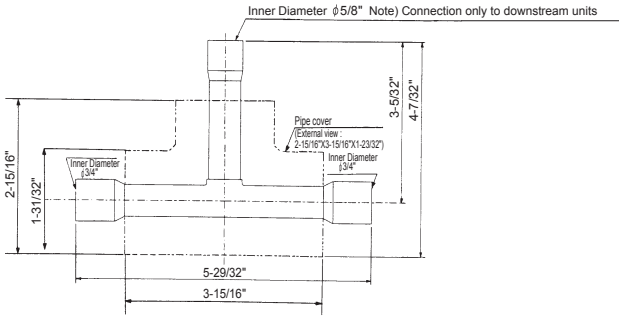

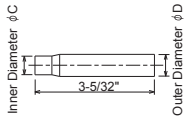

C (Inner Diameter)	D (Outer Diameter)	Number of reducers
ϕ 1/4"	ϕ 3/8"	2
ϕ 1/2"	ϕ 5/8"	1
ϕ 1/2"	ϕ 3/4"	1
ϕ 5/8"	ϕ 3/4"	2

8-2. HEADER

CITY MULTI units can be easily connected by using Joint sets and Header sets provided by Mitsubishi Electric. Two kinds of Header sets are available for use. Refer to section "Piping Design" or the Installation Manual that comes with the Header set for how to install the Header set.

CMY-Y64-G

1. Specification

Items		Details
Main	Number of ports	3 ~ 4 ports
	Number of branch joints	One for each liquid and gas pipe
	Pipe material	Phosphorus deoxidized copper C1220T-OL (JIS H3300)
Accessory	Insulation material	Foamed polyethylene
	Reducer	7 reducers of 5 types
	Cap	2 caps of 2 different types for each liquid and gas pipe ; 4 caps in total

2. External drawing

For liquid pipe:

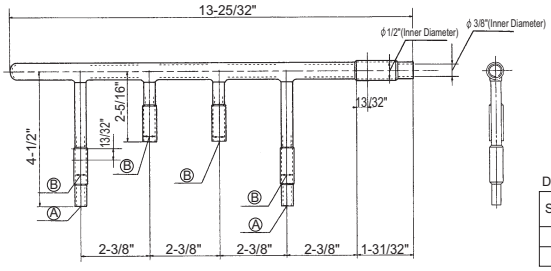

Dimension table

Symbol	Inner Diameter (mm)
Ⓐ	ϕ 1/4"
Ⓑ	ϕ 3/8"

For gas pipe:

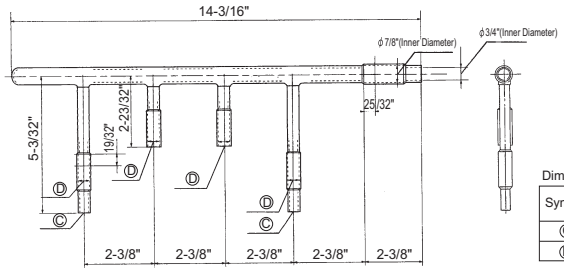

Dimension table

Symbol	Inner Diameter (mm)
Ⓒ	ϕ 1/2"
Ⓓ	ϕ 5/8"

Reducer (Accessory):

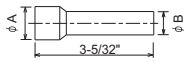

A (Inner Diameter)	B (Outer Diameter)	Number of reducers
ϕ 3/4"	ϕ 5/8"	1
ϕ 5/8"	ϕ 1/2"	2
ϕ 3/8"	ϕ 1/4"	2

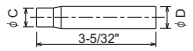

C (Inner Diameter)	D (Outer Diameter)	Number of reducers
ϕ 5/8"	ϕ 3/4"	1
ϕ 3/8"	ϕ 1/2"	1

CMY-Y68-G

1. Specification

Items		Details
Main	Number of ports	5 ~ 8 ports
	Number of branch joints	One for each liquid and gas pipe
	Pipe material	Phosphorus deoxidized copper C1220T-OL (JIS H3300)
Accessory	Insulation material	Foamed polyethylene
	Reducer	3 reducers of 3 types
	Cap	3 caps for each liquid and gas pipe ; 6 in total

2. External drawing

For liquid pipe:

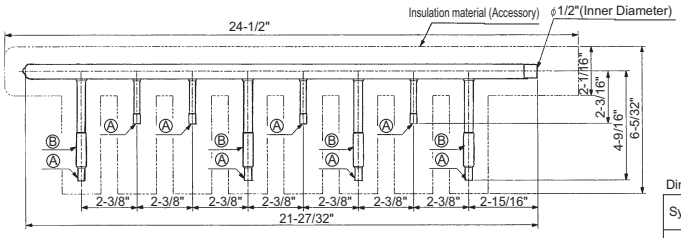

Dimension table

Symbol	Inner Diameter (mm)
Ⓐ	ϕ 1/4"
Ⓑ	ϕ 3/8"

Reducer (Accessory):

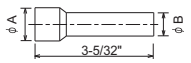

A (Inner Diameter)	B (Outer Diameter)	Number of reducers
ϕ 3/4"	ϕ 5/8"	1
ϕ 1/2"	ϕ 3/8"	1

For gas pipe:

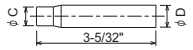

C (Inner Diameter)	D (Outer Diameter)	Number of reducers
ϕ 5/8"	ϕ 3/4"	1

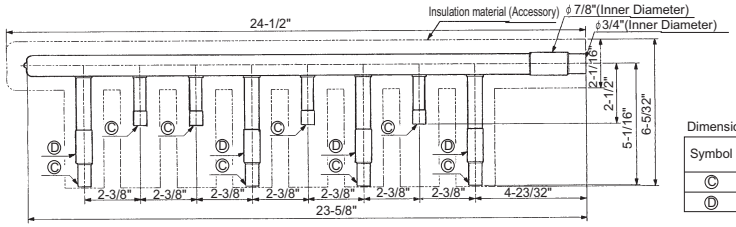

Dimension table

Symbol	Inner Diameter (mm)
Ⓒ	ϕ 1/2"
Ⓓ	ϕ 5/8"

9-1. General cautions

① Follow ordinance of your governmental organization for technical standard related to electrical equipment, wiring regulations, and guidance of each electric power company.

② Wiring for control (hereinafter referred to as transmission cable) shall be (50mm[1-5/8in] or more) apart from power source wiring so that it is not influenced by electric noise from power source wiring. (Do not insert transmission cable and power source wire in the same conduit.)

③ Be sure to provide designated grounding work to outdoor unit.

④ Give some allowance to wiring for electrical part box of indoor and outdoor units, because the box is sometimes removed at the time of service work.

⑤ Never connect 100V, 208~230V power source to terminal block of transmission cable. If connected, electrical parts will be damaged.

⑥ Use 2-core shield cable for transmission cable. If transmission cables of different systems are wired with the same multiplecore cable, the resultant poor transmitting and receiving will cause erroneous operations.

⑦ When extending the transmission line, make sure to extend the shield cable as well.

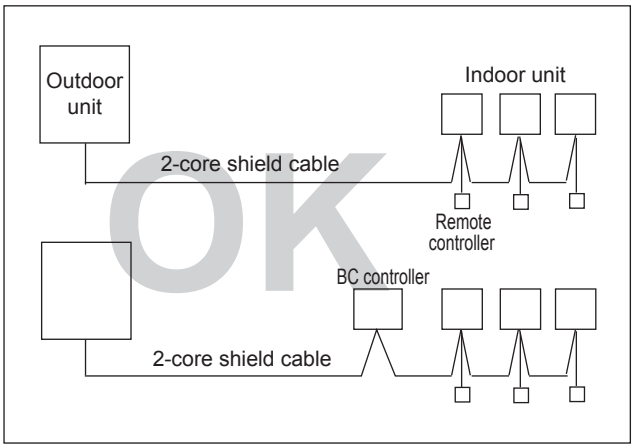

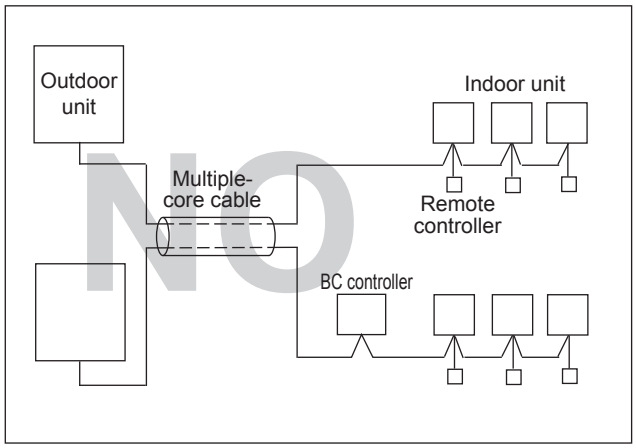

9-2. Power supply for Outdoor unit

9-2-1. Electrical characteristics of Outdoor unit at cooling mode

Symbols: MCA: Minimum Circuit Ampacity
SC: Starting Current RLA: Rated Load Amps

Model	Outdoor Units						Compressor		Fan
	Hz	Volts	**Voltage range**	RLA(A)	MCA(A)	Max.Fuse(A)	Output (kW)	SC(A)	Output (kW)
PUMY-P36NKMU3(-BS)	60Hz	208/230V	198 to 253V	19	29	44	2.8	7	0.074 × 2
PUMY-HP36NKMU1					36				
PUMY-P48NKMU3(-BS)				19	29	44	3.4	7	0.074 × 2
PUMY-HP48NKMU1					36				
PUMY-P60NKMU3(-BS)				19	36	45	3.9	14	0.20 × 2

9-3. Power cable specifications

Thickness of Wire for Main Power Supply and On/Off Capacities

Model		Power Supply	Minimum Wire Thickness (mm^2 [AWG])		Conduit Size	Breaker for Wiring*1	Breaker for Current Leakage (if you use)	Minimum circuit ampacity	Maximum rating of over current protector device
			Main cable *2	Ground					
Outdoor Unit	P36/P48	208/230 VAC, 60 Hz	5.3 [AWG10]	5.3 [AWG10]	3/4 inch *3	30 A	30A 30mA 0.1sec. or less	29 A	44 A
	HP36/48		8.4 [AWG8]	8.4 [AWG8]	3/4 inch	40 A	40A 30mA 0.1sec. or less	36 A	44 A
	P60		8.4 [AWG8]	8.4 [AWG8]	3/4 inch	40 A	40A 30mA 0.1sec. or less	36 A	45 A
Indoor Unit			Refer to installation manual of indoor unit.						

*1 Please follow applicable federal, state, or local codes to prevent potential leakage/electric shock. Or install a ground fault interrupt for the prevention of leakage and electric shock.

IMPORTANT
If a current leakage breaker is used, it should be compatible with higher harmonics as this unit is equipped with an inverter. The use of an inadequate breaker can cause the incorrect operation of inverter.

***2 Use copper supply wires. Use the electric wires over the rating voltage 300 V.**
*3 Although the conduit size is larger than the size specified for the wire thickness according to UL standards, use a conduit size of 3/4 inch.

Total operating current of the indoor unit	Minimum Wire Thickness (mm^2 [AWG])			Ground-fault interrupter *1 (if you use)	Local switch (A)		Breaker for wiring (NFB)
	Main cable	Branch	Ground		Capacity	Fuse	
F0 = 15 or less *2	2.1/14	2.1/14	2.1/14	15A current sensitivity *3	15	15	15
F0 = 20 or less *2	3.3/12	3.3/12	3.3/12	20A current sensitivity *3	20	20	20
F0 = 30 or less *2	5.3/10	5.3/10	5.3/10	30A current sensitivity *3	30	30	30

Apply to IEC61000-3-3 about max. permissive system impedance.
*1 The Ground-fault interrupter should support inverter circuit.
The Ground-fault interrupter should combine using of local switch or wiring breaker.
*2 Please take the larger of F1 or F2 as the value for F0.
F1 = Total operating maximum current of the indoor units × 1.2
F2 = {V1 × (Quantity of Type1)/C} + {V1 × (Quantity of Type2)/C} + {V1 × (Quantity of Type3)/C} + {V1 × (Quantity of Type4)/C} + {V1 × (Quantity of Type5)/C}

Indoor unit		V1	V2
Type1	PEFY-P·NMAU, PVFY-P·NAMU	38.0	1.6
Type2	PKFY-P·NHMU, PKFY-P·NKMU, PEFY-P·NMSU, PCFY-P·NKMU, PLFY-EP·NEMU, PLFY-P·NFMU, PMFY-P·NBMU, PKFY-P·NLMU	19.8	2.4
Type3	PKFY-P·NBMU, PLFY-P·NCMU	3.5	2.4
Type4	PEFY-P·NMHU, PFFY-P·NEMU, PFFY-P·NRMU	0.0	0.0
Type5	PEFY-P·NMHSU (connected to PUMY-P60 only)	13.8	4.8

C: Multiple of tripping current at tripping time 0.01s
Please pick up "C" from the tripping characteristic of the breaker.

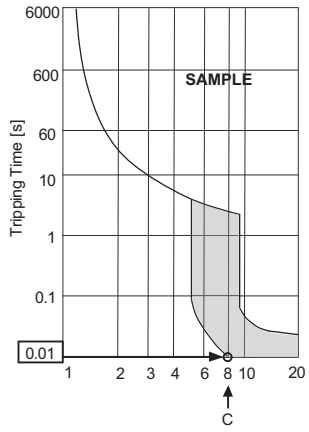

Rated Tripping current (x)
Sample chart

<Example of "F2" calculation>
* Condition PEFY-NMSU × 4 + PEFY-NMAU × 1, C = 8 (refer to right sample chart)
F2 = 19.8 × 4/8 + 38 × 1/8
= 14.65
→16 A breaker (Tripping current = 8 × 16 A at 0.01 s)
*3 Current sensitivity is calculated using the following formula.
G1 = V2 × (Quantity of Type1) + V2 × (Quantity of Type2) + V2 × (Quantity of Type3) + V2 × (Quantity of Type4) + V2 × (Quantity of Type5) + V3 × (Wire length [km])

G1	Current sensitivity
30 or less	30 mA 0.1sec or less
100 or less	100 mA 0.1sec or less

Wire thickness (mm^2/AWG)	V3
2.1/14	48
3.3/12	56
5.3/10	66

1. **Use a separate power supply for the outdoor unit and indoor unit.**
2. **Bear in mind ambient conditions (ambient temperature, direct sunlight, rain water, etc.) when proceeding with the wiring and connections.**
3. **The wire size is the minimum value for metal conduit wiring. The power cord size should be 1 rank thicker consideration of voltage drops. Make sure the power-supply voltage does not drop more than 10%.**
4. **Specific wiring requirements should adhere to the wiring regulations of the region.**
5. **Power supply cords of parts of appliances for outdoor use shall not be lighter than polychloroprene sheathed flexible cord (design 60245 IEC57). For example, use wiring such as YZW.**
6. **Install an earth longer than other cables.**

⚠WARNING

- **Be sure to use specified wires to connect so that no external force is imparted to terminal connections. If connections are not fixed firmly, it may cause heating or fire.**
- **Be sure to use the appropriate type of overcurrent protection switch. Note that generated overcurrent may include some amount of direct current.**
- **Turn on main power when the ambient temperature is -20 °C (-4 °F) or higher.**
- **In below -20 °C (-4 °F), it needs at least 12hr stand by before the units operate in order to warm the electrical parts.**

⚠CAUTION

- **Some installation site may require attachment of an earth leakage breaker. If no earth leakage breaker is installed, it may cause an electric shock.**
- **Do not use anything other than breaker and fuse with correct capacity. Using fuse and wire or copper wire with too large capacity may cause a malfunction of unit or fire.**

IMPORTANT
Make sure that the current leakage breaker is one compatible with higher harmonics.
Always use a current leakage breaker that is compatible with higher harmonics as this unit is equipped with an inverter.
The use of an inadequate breaker can cause the incorrect operation of inverter.

Never splice the power cable or the indoor-outdoor connection cable, otherwise it may result in a smoke, a fire or communication failure.

9-4. Power supply examples

The local standards and/or regualtions is applicable at a higher priority.

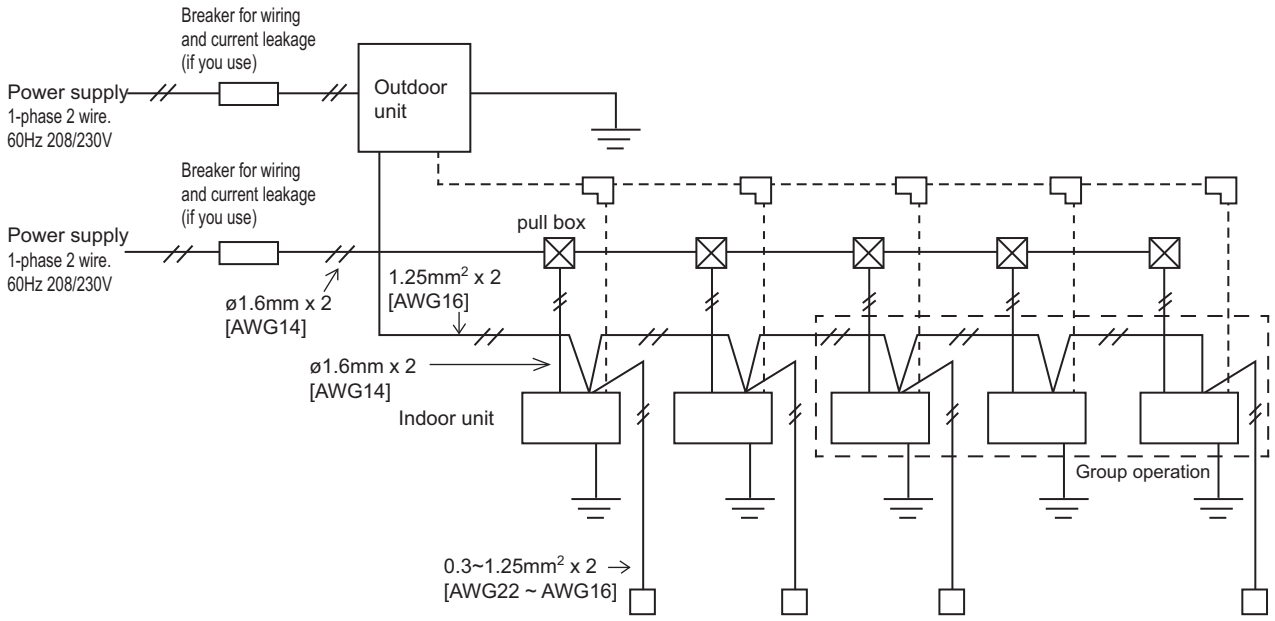

10-1. Transmission cable length limitation

10-1-1. Using MA Remote controller

MA remote controller refers to Simple MA remote controller and wireless remote controller.

Applicable to Outdoor as follows	Long transmission cable causes voltage down, therefore, the length limitation should be obeyed to secure proper transmission.			
PUMY-P•NKMU3	Max. length via Outdoor (M-NET cable)	L1+L2+L3, L1+L2+L4+L5, L3+L4+L5	<=500m[1640ft]	1.25mm^2 [AWG16] or thicker
PUMY-HP•NKMU1	Max. length to Outdoor (M-NET cable)	L1, L3, L2+L4, L5	<=200m[656ft]	1.25mm^2 [AWG16] or thicker
	Max. length from MA to Indoor for each group	a1+a2, a1+a2+a3+a4	<=200m[656ft]	0.3-1.25 mm^2 [AWG22-16]
	24VDC to AG-150A-A	n	<=50m[164ft]	0.75-2.0 mm^2 [AWG18-14]

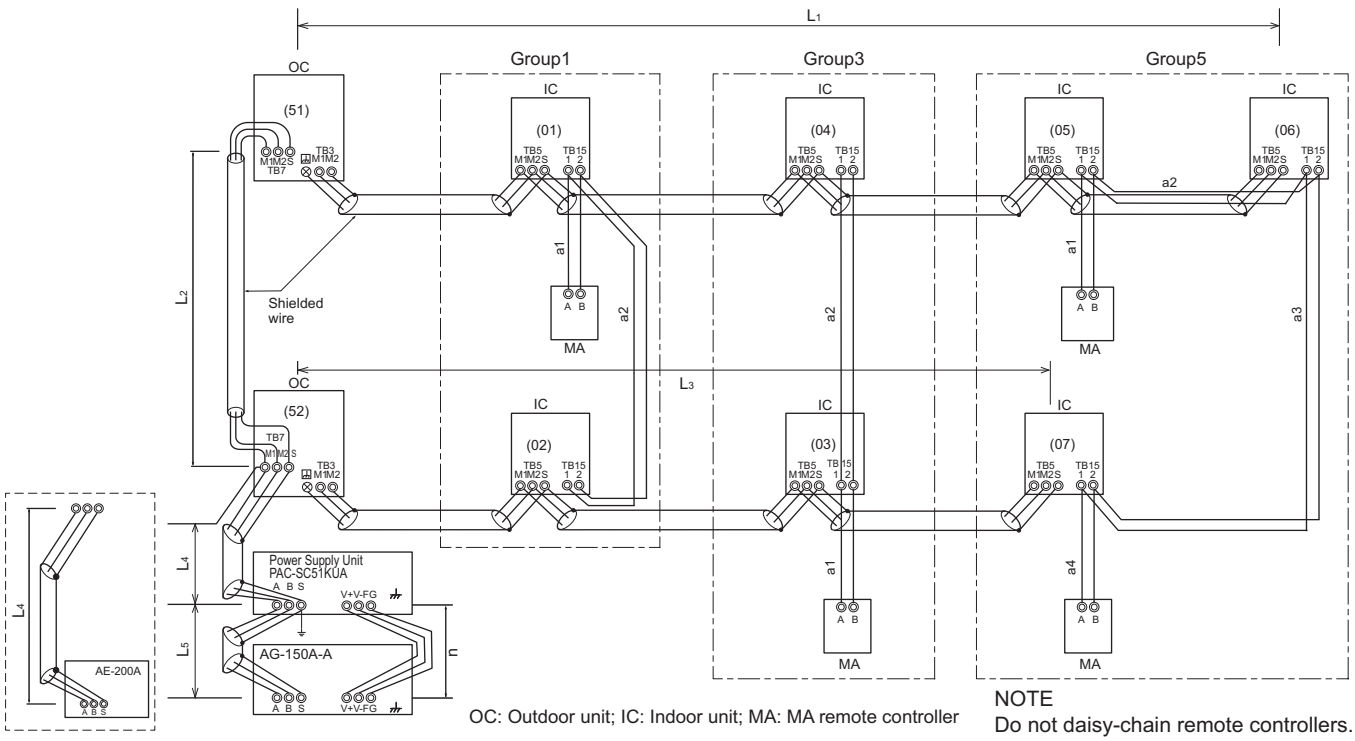

OC: Outdoor unit; IC: Indoor unit; MA: MA remote controller

NOTE
Do not daisy-chain remote controllers.

10-1-2. Using ME Remote controller

ME remote controller refers to Smart ME controller.

Applicable to Outdoor as follows	Long transmission cable causes voltage down, therefore, the length limitation should be obeyed to secure proper transmission.			
PUMY-P•NKMU3	Max. length via Outdoor (M-NET cable)	L1+L2+L3+L4, L1+L2+L6+L7, L1+L2+L3+L5, L3+L4+L6+L7, L3+L5+L6+L7, L4+L5	<=500m[1640ft]	1.25mm^2 [AWG16] or thicker
PUMY-HP•NKMU1	Max. length to Outdoor (M-NET cable)	L1, L3+L4, L2+L6, L7, L3+L5	<=200m[656ft]	1.25mm^2 [AWG16] or thicker
	Max. length from ME to Indoor	e1,e2,e3,e4	<=10m[32ft] *1	0.3-1.25 mm^2 [AWG22-16] *1
	24VDC to AG-150A-A	n	<=50m[164ft]	0.75-2.0 mm^2 [AWG18-14]

*1. If the length from ME to Indoor exceed 10m, use 1.25 mm^2[AWG16] shielded cable, but the total length should be counted into Max. length via Outdoor.

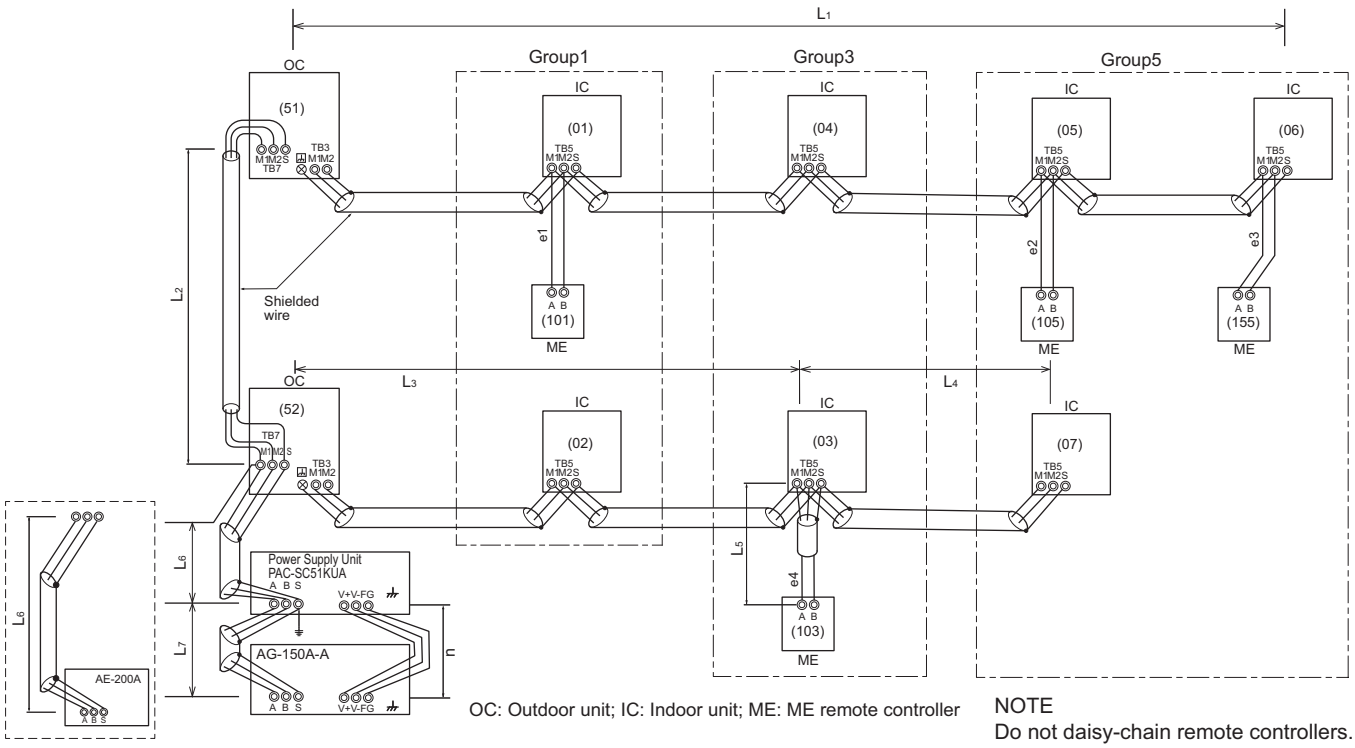

OC: Outdoor unit; IC: Indoor unit; ME: ME remote controller

NOTE
Do not daisy-chain remote controllers.

10-2. Transmission cable specifications

	Transmission cables (Li)	ME Remote controller cables	MA Remote controller cables
Type of cable	Shielding wire (2-core) CVVS, CPEVS or MVVS	Sheathed 2-core cable (unshielded) CVV	
Cable size	More than 1.25mm^2 [AWG16]	0.3～1.25mm^2 [AWG22～16]	0.3～1.25mm^2 [AWG22～16]*1
Remarks	—	When 10m [32ft] is exceeded, use cables with the same specification as transmission cables.	Max length : 200m [656ft]

*1 To wire PAR-CT01MAU, PAR-40MAAU, and PAC-YT53CRAU, use a wire with a diameter of 0.3 mm^2 [AWG22]

CVVS, MVVS: PVC insulated PVC sheathed shielded control cable
CPEVS: PE insulated PVC sheathed shielded communication cable
CVV: PVC insulated PVC sheathed control cable

10-3. System configuration restrictions

10-3-1. Common restrictions for the CITY MULTI system

For each Outdoor/Heat source unit, the maximum connectable quantity of Indoor unit is specified at its Specifications table.

A) 1 Group of Indoor units can have 1-16 Indoor units;

B) Maximum 2 remote controllers for 1 group;

*MA/ME remote controllers cannot be present together in 1group.

*When a PAR-CT01MAU is connected to a group, no other MA remote controllers can be connected to the same group.

*To wire PAR-CT01MAU and PAC-YT53CRAU, use a wire with a diameter of 0.3 mm^2 [AWG22]

C) 1 Lossnay unit can interlock maximum 16 Indoor units; 1 Indoor unit can interlock only 1 Lossnay unit.

D) Maximum 3 System controllers are connectable when connecting to TB3 of the Outdoor/Heat source unit.

E) A maximum of 6 system controller are connectable to TB3 and TB7 of Outdoor/Heat source unit.

F) 4 System controllers or more are connectable when connecting to TB7 of the Outdoor/Heat source unit, if the transmission power is supplied by the power supply unit PAC-SC51KUA.

*System controller connected as described in D) would have a risk that the failure of connected Outdoor/Heat source unit would stop power supply to the System controller.

10-3-2. Ensuring proper communication power and the number of connected units for M-NET

In order to ensure proper communication among Outdoor/Heat source unit, Indoor unit, Lossnay, and Controllers, the transmission power situation for the M-NET should be observed. In some cases, Transmission booster should be used.
Taking the power consumption of Indoor unit as 1, the equivalent power consumption or supply of others are listed at Table 1 and Table 2.
Both the transmission line for centralized controller and indoor-outdoor transmission line must meet the conditions listed below. (Both conditions a) and b) must be met.)

a) [Total equivalent power consumption] ≤ [The equivalent power supply]

b) [Total equivalent number of units (Table1)] ≤ [40]

Table 1 The equivalent power consumption and the equivalent number of units

Category	Model	The equivalent power consumption	The equivalent number of units
Indoor unit	Sized P05-P96, PEFY-AF1200CFM-E	1	1
	PEFY-AF1200CFMR-E	2	2
BC controller	CMB	2	1
PWFY *1	P36NMU-E-BU	6	1
	P36NMU-E2-AU	1	1
	P72NMU-E2-AU	5	1
MA remote controller/Lossnay	PAR-CT01MAU PAR-40MAAU PAC-YT53CRAU PAR-FA32MA LGH-F-RX_5-E1 PZ-60DR-E PZ-43SMF-E	0	0
ME remote controller	PAR-U01MEDU	0.5	1
System controller	AE-200A AE-50A EW-50A LM-AP	0	0
	AG-150A-A EB-50GU-A PAC-IF01AHC-J	0.5	1
	TC-24B	1.5	5
	PAC-YG60MCA PAC-YG66DCA PAC-YG63MCA	0.25	1
ON/OFF controller	PAC-YT40ANRA	1	1
MN converter	CMS-MNG-E	2	1
Outdoor/Heat source unit	TB7 power consumption	0	0
System control interface	MAC-333IF-E	0	0
A-M converter	PAC-IF01MNT-E	1	2

*1 PWFY cannot be connected to PUMY model.

Table 2 The equivalent power supply

Category	Model	The equivalent power supply		
Transmission Booster	PAC-SF46EPA-G	25 *1		
Power supply unit	PAC-SC51KUA	5		
Expansion controller	PAC-YG50ECA	6		
BM ADAPTER	BAC-HD150	6		
System controller	AE-200A/AE-50A	0.75		
	EW-50A	1.5		
	LM-AP	0		
Outdoor/Heat source unit		TB3 and TB7 total	TB7 only	TB3 only
	Outdoor unit other than the following units *2	32 *1	6	32*1 - equivalent power supplied to TB7
	S-Series outdoor unit	12 *1	0	12 *1
	TLMU/TKMU outdoor unit	32 *1	- *3	32 *1

*1 When one or more indoor units listed below is connected, subtract 3 from the equivalent power supply.

Table 3

Category	Model
Indoor unit	Sized P72, P96 PEFY-AF1200CFM(R)-E

*2 If PAC-SC51KUA is used to supply power at TB7 side, no power supply need from Outdoor/Heat source unit at TB7, Connector TB3 itself will therefore have 32.

With the equivalent power consumption values and the equivalent number of units in Table 1 and Table 2, PAC-SF46EPA-G can be designed into the air-conditioner system to ensure proper system communication according to (A), (B), (C).

(A) Firstly, count from TB3 at TB3 side the total equivalent number of units of Indoor units, ME remote controller, and System controllers. If the total equivalent number of units reaches 40, a PAC-SF46EPA-G should be set.

(B) Secondly, count from TB7 side to TB3 side the total transmission power consumption. If the total equivalent power supply reaches 32, a PAC-SF46EPA-G should be set. Yet, if a PAC-SC51KUA or another controller with a built-in power supply, such as PAC-YG50ECA, is used to supply power at TB7 side, count from TB3 side only.

(C) Thirdly, count from TB7 at TB7 side the total transmission power consumption, If the total equivalent power supply for only TB7 reaches 6, a PAC-SF46EPA-G should be set. Also, count from TB7 at TB7 side the total equivalent number of units of System controllers, and so on. If the total equivalent number of units reaches 40, a PAC-SF46EPA-G should be set.

* The equivalent power supply of S-Series outdoor unit is 12.
* When one or more indoor units listed in Table 3 is connected, subtract 3 from the equivalent power supply.

■ System example

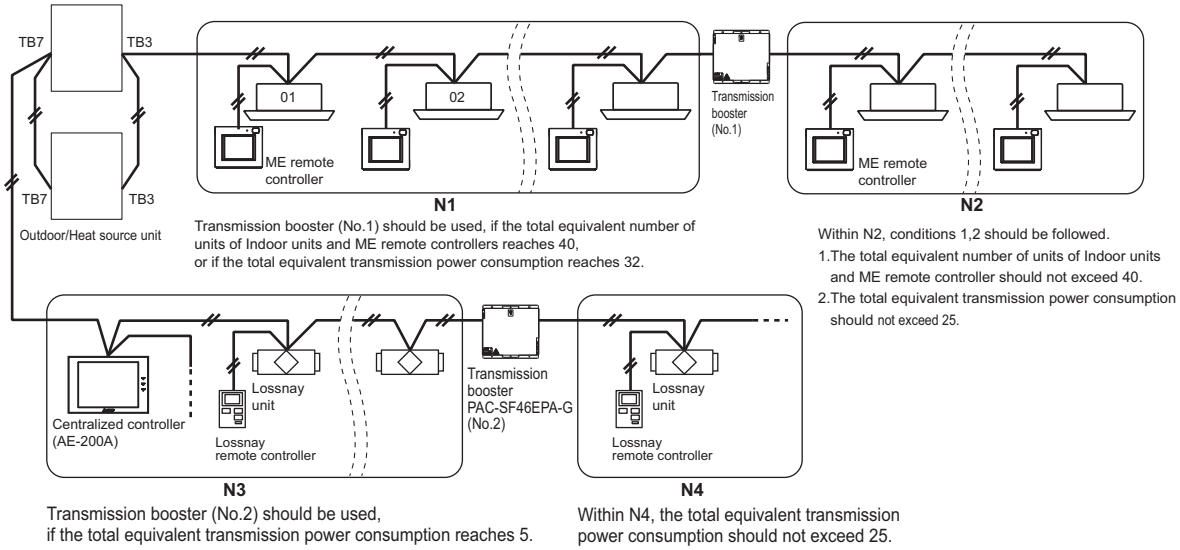

10-3-3. Ensuring proper power supply to System controller

The power to System controller (excluding AE-200A, AE-50A, EW-50A, BAC-HD150, LM-AP) is supplied via M-NET transmission line. M-NET transmission line at TB7 side is called Centralized control transmission line while one at TB3 side is called Indoor-Outdoor/Heat source transmission line. There are 3 ways to supply power to the System controller .

A) Connecting to TB3 of the Outdoor/Heat source unit and receiving power from the Outdoor/Heat source unit.
B) Connecting to TB7 of the Outdoor/Heat source unit and receiving power from the Outdoor/Heat source unit.
(Not applicable to the PUMY model and PUHY/PURY-TLMU/TKMU model)
C) Connecting to TB7 of the Outdoor/Heat source unit but receiving power from power supply unit PAC-SC51KUA.
* System controllers (AE-200A, AE-50A, EW-50A, BAC-HD150, LM-AP) have a built-in function to supply power to the M-NET transmission lines, so no power needs to be supplied to the M-NET transmission lines from the Outdoor/Heat source units or from PAC-SC51KUA.

10-3-3-A. When connecting to TB3 of the Outdoor/Heat source unit and receiving power from the Outdoor/Heat source unit.

Maximum 3 System controllers can be connected to TB3.
If there is more than 1 Outdoor/Heat source unit, it is necessary to replace power supply switch connector CN41 with CN40 on one Outdoor/Heat source unit.

Fig. 10-3-3-A

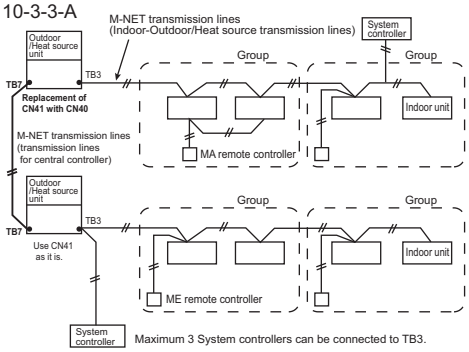

10-3-3-B. When connecting to TB7 of the Outdoor/Heat source unit and receiving power from the Outdoor/Heat source unit. (Not applicable to the PUMY model and PUHY/PURY-TLMU/TKMU model)

Maximum 6 System controllers can be connected to TB7 and receiving power from the Outdoor/Heat source unit.
(Not applicable to the PUMY model and PUHY/PURY-TLMU/TKMU model)
It is necessary to replace power supply switch connector CN41 with CN40 on one Outdoor/Heat source unit.

Note (only for PUHY/PURY model)
· When YLMU/YKMU Outdoor unit model is used, the male power supply connector can be connected to CN40, and the System controller can be connected to TB7 side.
· When the male power supply connector is connected from TLMU/TKMU Outdoor unit to CN40, the power is supplied to TB7 side even when the main power of the TLMU/TKMU outdoor unit is switched off, and the System controller may store an error in the error history and emit an alarm signal.
· If only LOSSNAY units or outdoor units in different refrigerant circuits are connected to TB7 side, the male power supply connector can be connected from TLMU/TKMU outdoor unit to CN40.

Fig. 10-3-3-B

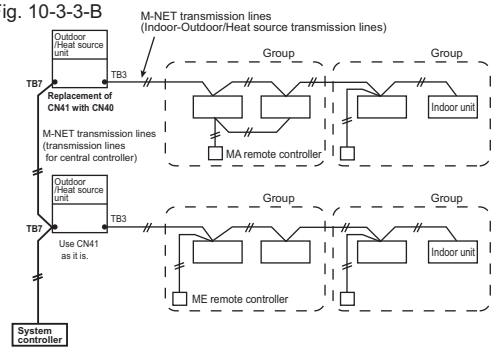

10-3-3-C. When connecting to TB7 of the Outdoor/Heat source unit but receiving power from PAC-SC51KUA.

When using PAC-SC51KUA to supply transmission power, the power supply connector CN41 on the Outdoor/Heat source units should be kept as it is. It is also a factory setting.
1 PAC-SC51KUA supports maximum 1 AG-150A-A or 1 EB-50GU-A unit due to the limited power 24VDC at its TB3.
However, 1 PAC-SC51KUA supplies transmission power at its TB2 equal to 5 Indoor units, which is referable at Table 2.
If System controller, ON/OFF controller connected to TB7 consume transmission power more than 5 (Indoor units), Transmission booster PAC-SF46EPA is needed. PAC-SF46EPA supplies transmission power equal to 25 Indoor units.

Fig. 10-3-3-C

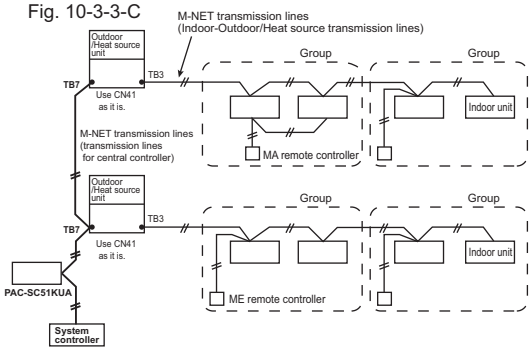

⚠ CAUTION

■AG-150A-A/EB-50GU-A*1 are recommended to connect to TB7 because it performs back-up to a number of data.
In an air conditioner system has more than 1 Outdoor/Heat source units, AG-150A-A/EB-50GU-A receiving transmission power through TB3 or TB7 on one of the Outdoor/Heat source units would have a risk that the connected Outdoor/Heat source unit failure would stop power supply to AG-150A-A/EB-50GU-A and disrupt the whole system.
When applying apportioned electric power function, AG-150A-A/EB-50GU-A are necessary to connected to TB7 and has its own power supply unit PAC-SC51KUA.
Note: Power supply unit PAC-SC51KUA is for AG-150A-A/EB-50GU-A.
*1: AG-150A-A is an example model of system controllers.

■How to connect system controllers (AE-200A, AE-50A, EW-50A, BAC-HD150, LM-AP) to a given system
System controllers (AE-200A, AE-50A, EW-50A, BAC-HD150, LM-AP) have a built-in function to supply power to the M-NET transmission lines, so no power needs to be supplied to the M-NET transmission lines from the Outdoor/Heat source units or from PAC-SC51KUA.
Leave the power supply connector on the Outdoor/Heat source unit connected to CN41 as it is.
Refer to 10-3-2 for information about the power-supply capacity of each system controller (EW-50A, BAC-HD150, LM-AP) to the low-level system controllers.

Fig. 10-3-3-D

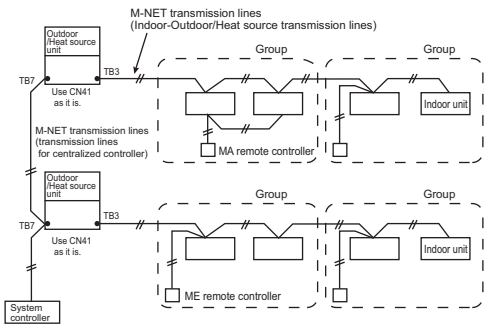

10-3-4. Power supply to LM-AP

1-phase 208-230VAC power supply is needed.
The power supply unit PAC-SC51KUA is not necessary when connecting only the LM-AP. Yet, make sure to change the power supply changeover connector CN41 to CN40 on the LM-AP.

10-3-5. Power supply to expansion controller

1-phase 100-240VAC power supply is needed.
The power supply unit PAC-SC51KUA is not necessary.
The expansion controller supplies power through TB3, which equals 6 indoor units. (refer to Table 2)

10-3-6. Power supply to BM ADAPTER

1-phase 100-240VAC power supply is needed.
The power supply unit PAC-SC51KUA is not necessary when only BM ADAPTER is connected.
Yet, make sure to move the power jumper from CN41 to CN40 on the BM ADAPTER.

10-3-7. Power supply to AE-200A/AE-50A/EW-50A

1-phase 100-240VAC power supply is needed.
The power supply unit PAC-SC51KUA is not necessary when connecting only the AE-200A/AE-50A/EW-50A.

10-4. Address setting

10-4-1. Switch operation

In order to constitute CITY MULTI in a complete system, switch operation for setting the unit address No. and connection No. is required.

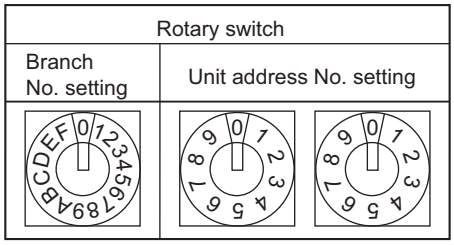

① Address No. of outdoor unit, indoor unit and ME remote controller.
The address No. is set at the address setting board.
In the case of R2 system, it is necessary to set the same No. at the branch No. switch of indoor unit as that of the BC controller connected. (When connecting two or more branches, use the lowest branch No.)

② Caution for switch operations

- Be sure to shut off power source before switch setting. If operated with power source on, switch can not operate properly.
- No units with identical unit address shall exist in one whole air conditioner system. If set erroneously, the system can not operate.

③ MA remote controller

- When connecting only one remote controller to one group, it is always the main remote controller.
  When connecting two remote controllers to one group, set one remote controller as the main remote controller and the other as the sub remote controller.
- The factory setting is "Main".

PAR-CT01MAU
The MA remote controller does not have the switches listed above.
Refer to the installation manual for the function setting.

PAC-YT53CRAU

Setting the dip switches

There are switches on the back of the top case. Remote controller Main/Sub and other function settings are performed using these switches. Ordinarily, only change the Main/Sub setting of SW1.
(The factory settings are ON for SW1, 3, and 4 and OFF for SW2.)

SW No	SW contents Main	ON	OFF	Comment
1	Remote controller Main/Sub setting	Main	Sub	Set one of the two remote controllers at one group to "ON".
2	Temperature display units setting	Celsius	Fahrenheit	When the temperature is displayed in [Fahrenheit], set to "OFF".
3	Cooling/heating display in AUTO mode	Yes	No	When you do not want to display "Cooling" and "Heating" in the AUTO mode, set to "OFF".
4	Indoor temperature display	Yes	No	When you do not want to display the indoor temperature, set to "OFF".

10-4-2. Rule of setting address

Unit		Address setting	Example	Note
Indoor unit System control interface (MAC-333IF-E) A-M converter (PAC-IF01MNT-E)		01 ~ 50	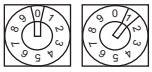	Use the most recent address within the same group of indoor units. Make the indoor units address connected to the BC controller (Sub) larger than the indoor units address connected to the BC controller (Main). If applicable, set the sub BC controllers in an PURY system in the following order: (1) Indoor unit to be connected to the BC controller (Main) (2) Indoor unit to be connected to the BC controller (No.1 Sub) (3) Indoor unit to be connected to the BC controller (No.2 Sub) Set the address so that (1)<(2)<(3)
Outdoor unit		51 ~ 99, 100 (Note1)	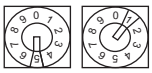	The smallest address of indoor unit in same refrigerant system + 50 Assign sequential address numbers to the outdoor units in one refrigerant circuit system. OC and OS are automatically detected. (Note 2) ∗Please reset one of them to an address between 51 and 99 when two addresses overlap. ∗The address automatically becomes "100" if it is set as "01~ 50"
BC controller (Main)		52 ~ 99, 100	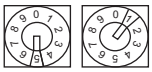	The address of outdoor unit + 1 ∗Please reset one of them to an address between 51 and 99 when two addresses overlap. ∗The address automatically becomes "100" if it is set as "01~ 50"
BC controller (Sub)		52 ~ 99, 100	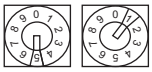	Lowest address within the indoor units connected to the BC controller (Sub) plus 50.
Local remote controller	ME, Lossnay Remote controller (Main)	101 ~ 150	1 Fixed 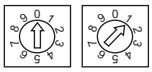	The smallest address of indoor unit in the group + 100 ∗The place of "100" is fixed to "1"
Local remote controller	ME, Lossnay Remote controller (Sub)	151 ~ 199, 200	1 Fixed 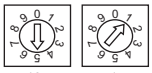	The address of main remote controller + 50 ∗The address automatically becomes "200" if it is set as "00"
System controller	ON/OFF remote controller	201 ~ 250	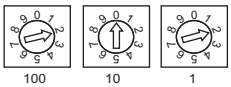	The smallest group No. to be managed + 200 ∗The smallest group No. to be managed is changeable.
System controller	AE-200A/AE-50A AG-150A-A EB-50GU-A EW-50A TC-24B	000, 201 ~ 250	0, 2 / 0-5 / 0-9 100 / 10 / 1	∗TC-24B cannot be set to "000".
System controller	PAC-YG50ECA	000, 201 ~ 250	0, 2 / 0-5 / 0-9 100 / 10 / 1	∗Settings are made on the initial screen of AG-150A-A.
System controller	BAC-HD150	000, 201 ~ 250	0, 2 / 0-5 / 0-9 100 / 10 / 1	∗Settings are made with setting tool of BM ADAPTER.
System controller	LMAP04U-E	201 ~ 250	2 Fixed 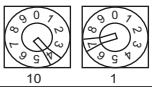	
PI, AI, DIDO	PAC-YG60MCA	01 ~ 50	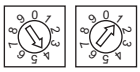	
PI, AI, DIDO	PAC-YG63MCA	01 ~ 50	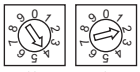	
PI, AI, DIDO	PAC-YG66DCA	01 ~ 50	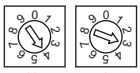	
Lossnay		01 ~ 50	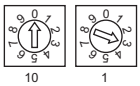	After setting the addresses of all the indoor units, assign an arbitrary address.
PAC-IF01AHC-J		201 ~ 250	2 Fixed 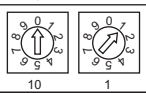	

Note1: To set the address to "100", set it to "50"
Note2: Outdoor units OC and OS in one refrigerant circuit system are automatically detected.
OC and OS are ranked in descending order of capacity. If units are the same capacity, they are ranked in ascending order of their address.

10-4-3. System example

Factory setting

Original switch setting of the outdoors, indoors, controllers, LM-AP, and BM ADAPTER at shipment is as follows.

- Outdoor unit : Address: 00, CN41: ON (Jumper), DipSW2-1: OFF
- Indoor unit : Address: 00
- ME remote controller : Address: 101
- LM-AP : Address: 247, CN41: ON (Jumper), DipSW1-2: OFF
- BM ADAPTER : Address: 000, CN41: ON (Jumper)

10-4-3-1. Example: Basic (No address setting)

MA R/C: PAC-YT53CRAU

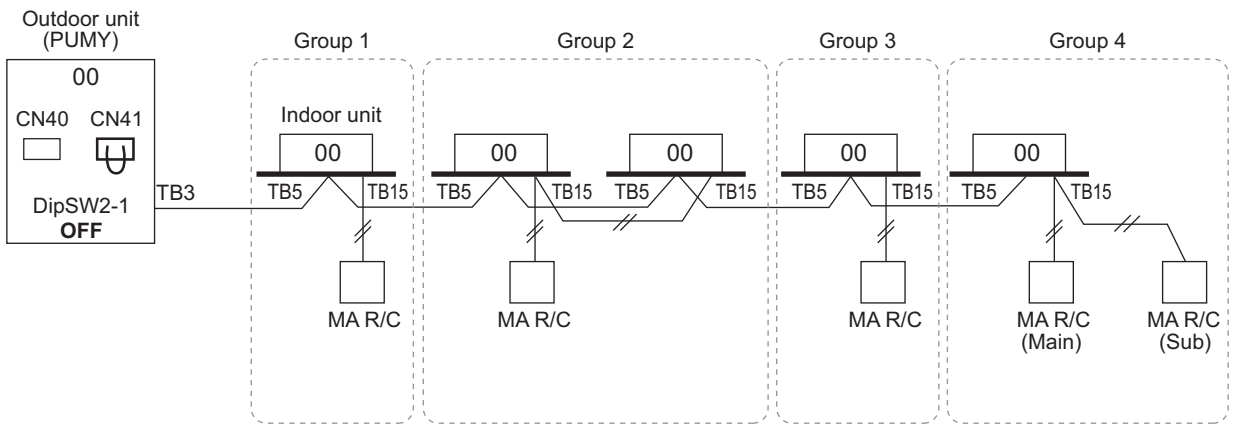

10-4-3-2. Example: Basic, Sub/main ME remote controller

Main R/C: PAR-U01MEDU
Sub R/C: PAR-U01MEDU

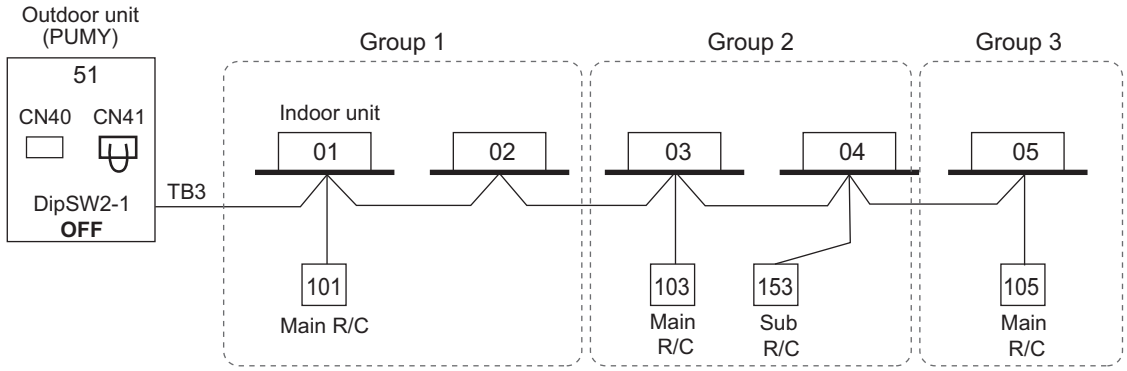

10-4-3-3. Example: AG-150A-A, AE-200A, TB7

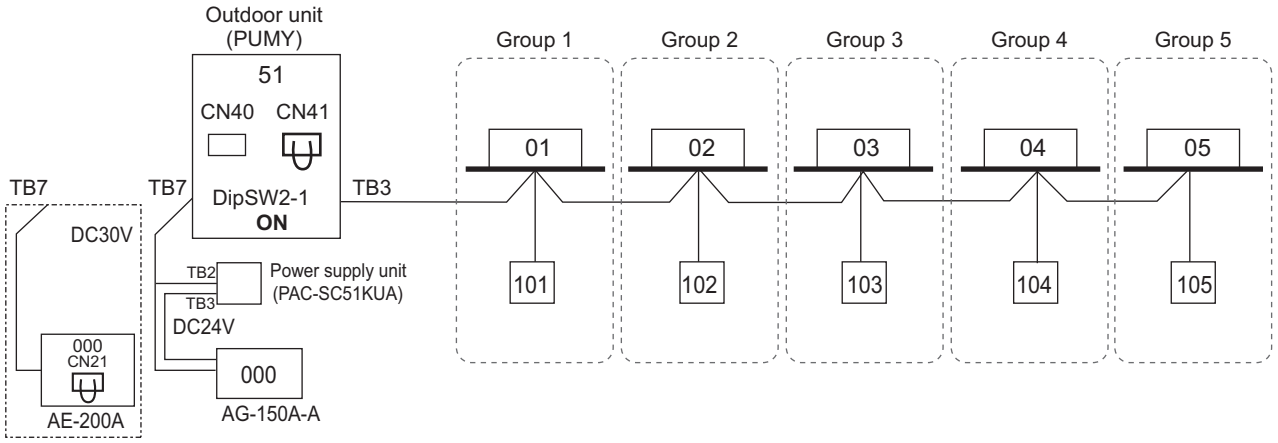

NOTE
- It is necessary to turn on the DipSW 2-1 on the outdoor unit control board when the central controller is connected.

10-4-3-4. Example: Grouping in different refrigerant system

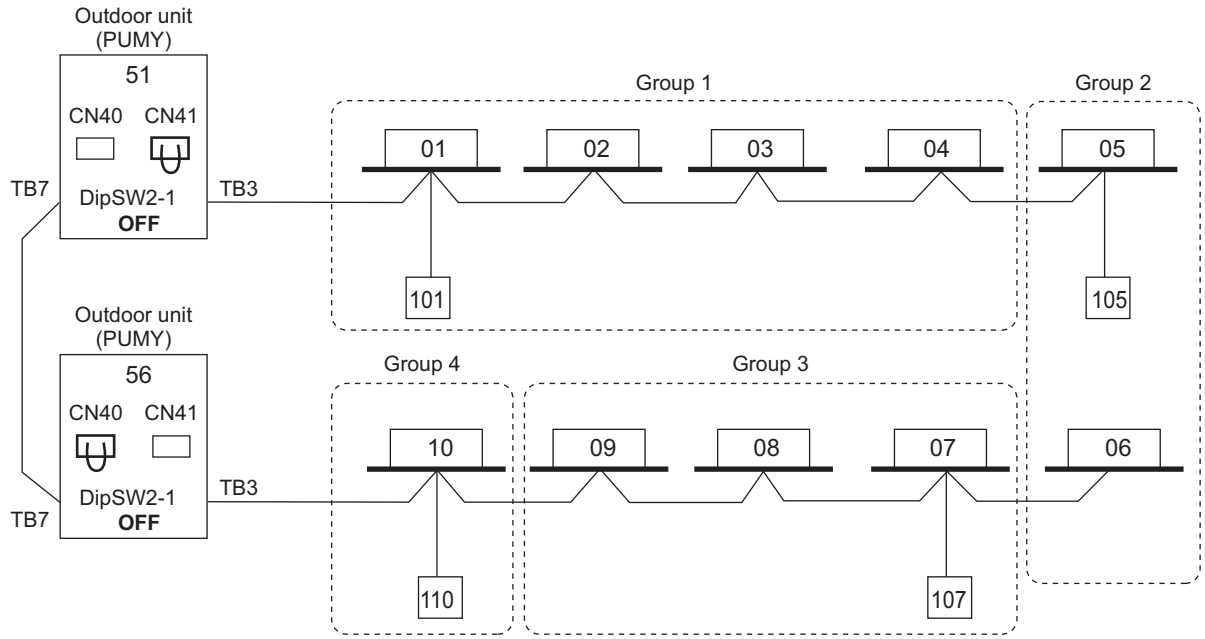

NOTE
- It is necessary to change the connecter to CN40 on the outdoor unit control board (only one Outdoor unit) when the group is set between other refrigerant systems.
- It is necessary to set on the remote controller by manual when group sets on the different refrigerant system. Please refer to remote controller installation manual.

10-4-3-5. Example: 2 Outdoor unit, AG-150A-A, AE-200A, MA

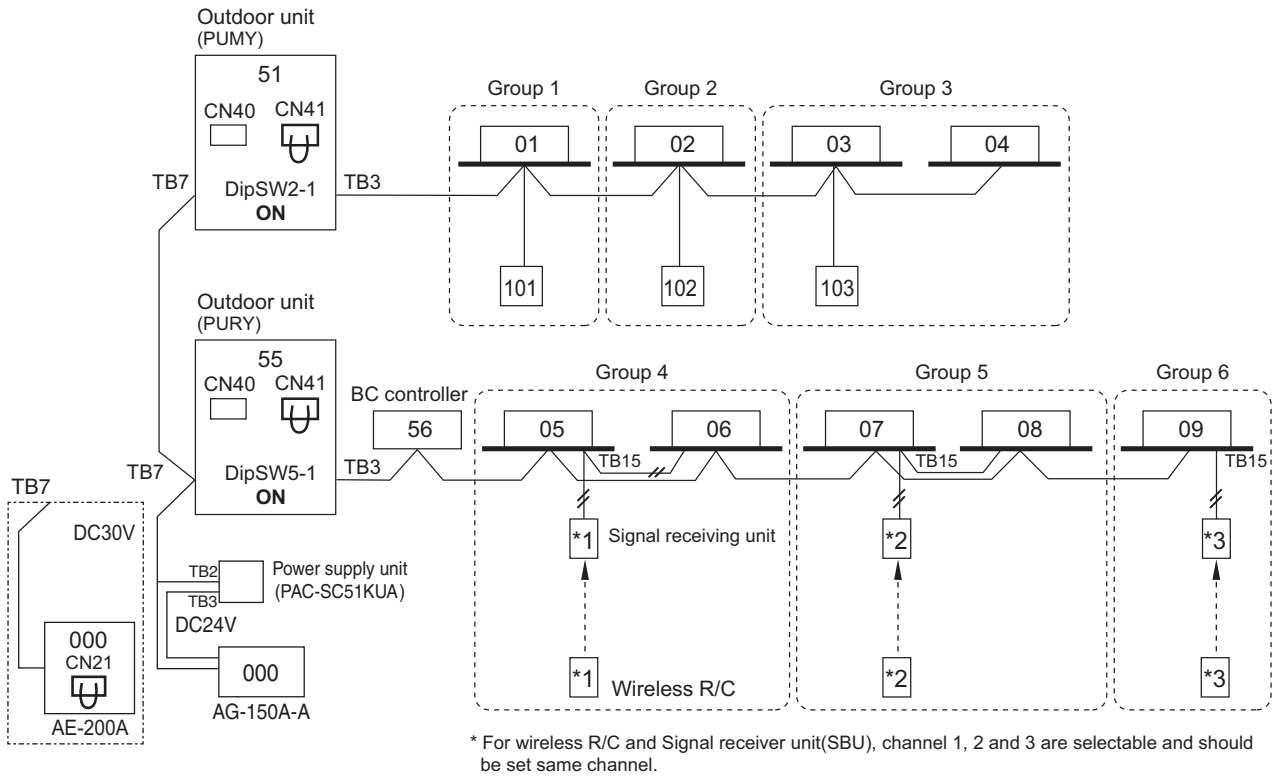

* For wireless R/C and Signal receiver unit(SBU), channel 1, 2 and 3 are selectable and should be set same channel.

10-4-3-6. Example: TG-2000A(*1)+AE-200A/AE-50A/EW-50A
AE-200A can control max. 50 indoor units;
TG-2000A can control max. 40 of AE-200A/AE-50A/EW-50A;*2
TG-2000A can control max. 2000 indoor units.

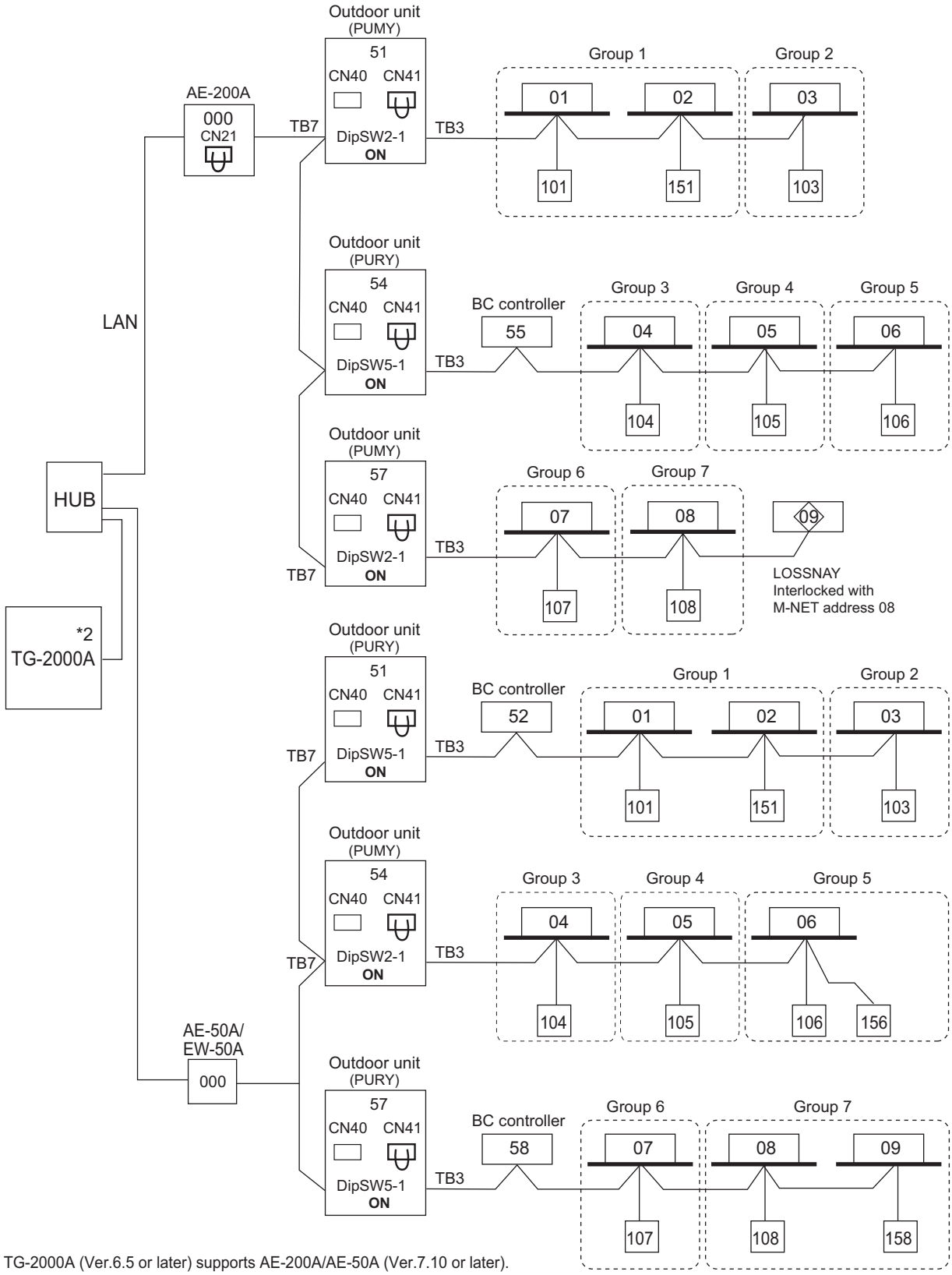

*1 TG-2000A (Ver.6.5 or later) supports AE-200A/AE-50A (Ver.7.10 or later).
TG-2000A (Ver.6.60 or later) supports EW-50A.
*2 When AE-200A connected with AE-50A/EW-50A is connected, the number of AE-50A/EW-50A will be the maximum controllable number.
TG-2000A can control up to 40 AE-200A/AE-50A/EW-50A or AE-200A without AE-50A/EW-50A connection.

10-4-3-7. AE-200A + AE-50A/EW-50A
AE-200A can control max. 200 indoor units/via AE-50A/EW-50A.

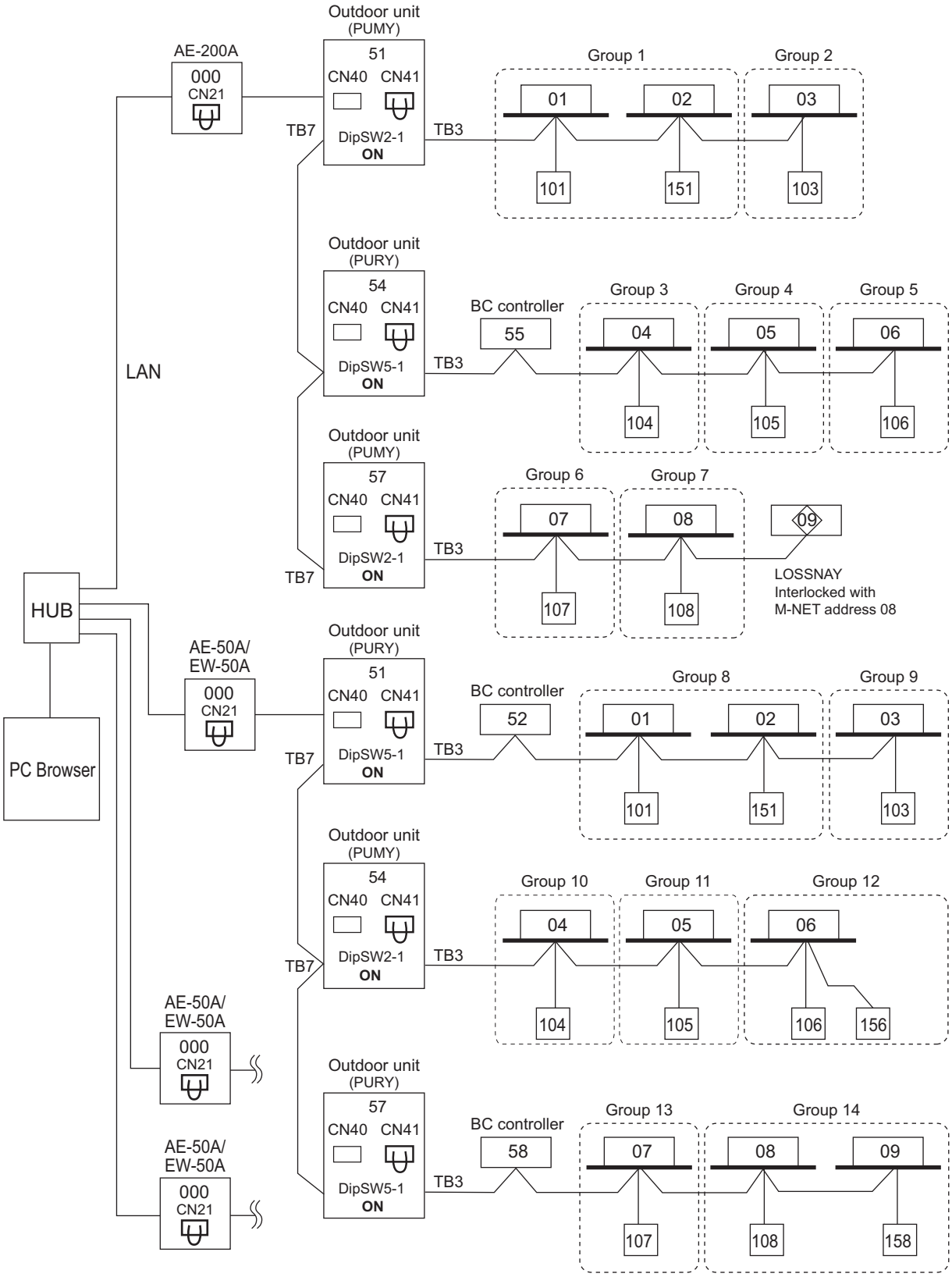

10-4-3-8. LM-AP

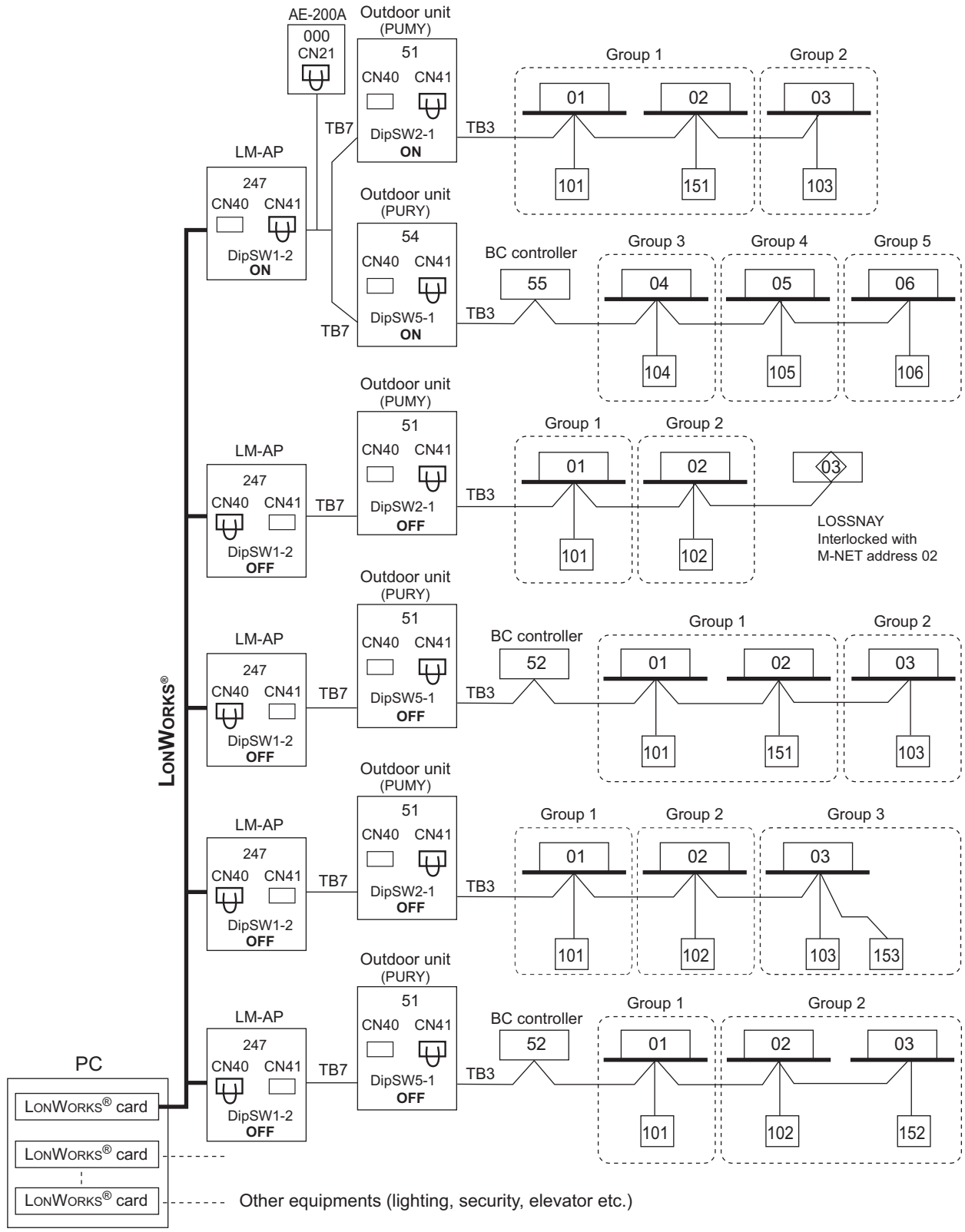

NOTE
- LM-AP can control 50 indoor units.
- It is necessary to turn on the DipSW1-2 on the LM-AP control board and the DipSW2-1 on the outdoor unit control board with central controllers (Power supply unit).
- It is necessary to change the connector to CN40 on the LM-AP control board without central controllers (Power supply unit).

10-4-3-9. BM ADAPTER

BM ADAPTER can transmit max. 50 indoor units;
Change Jumper from CN41 to CN40 to activate power supply to BM ADAPTER itself for those BM ADAPTER connected without the power supply unit.

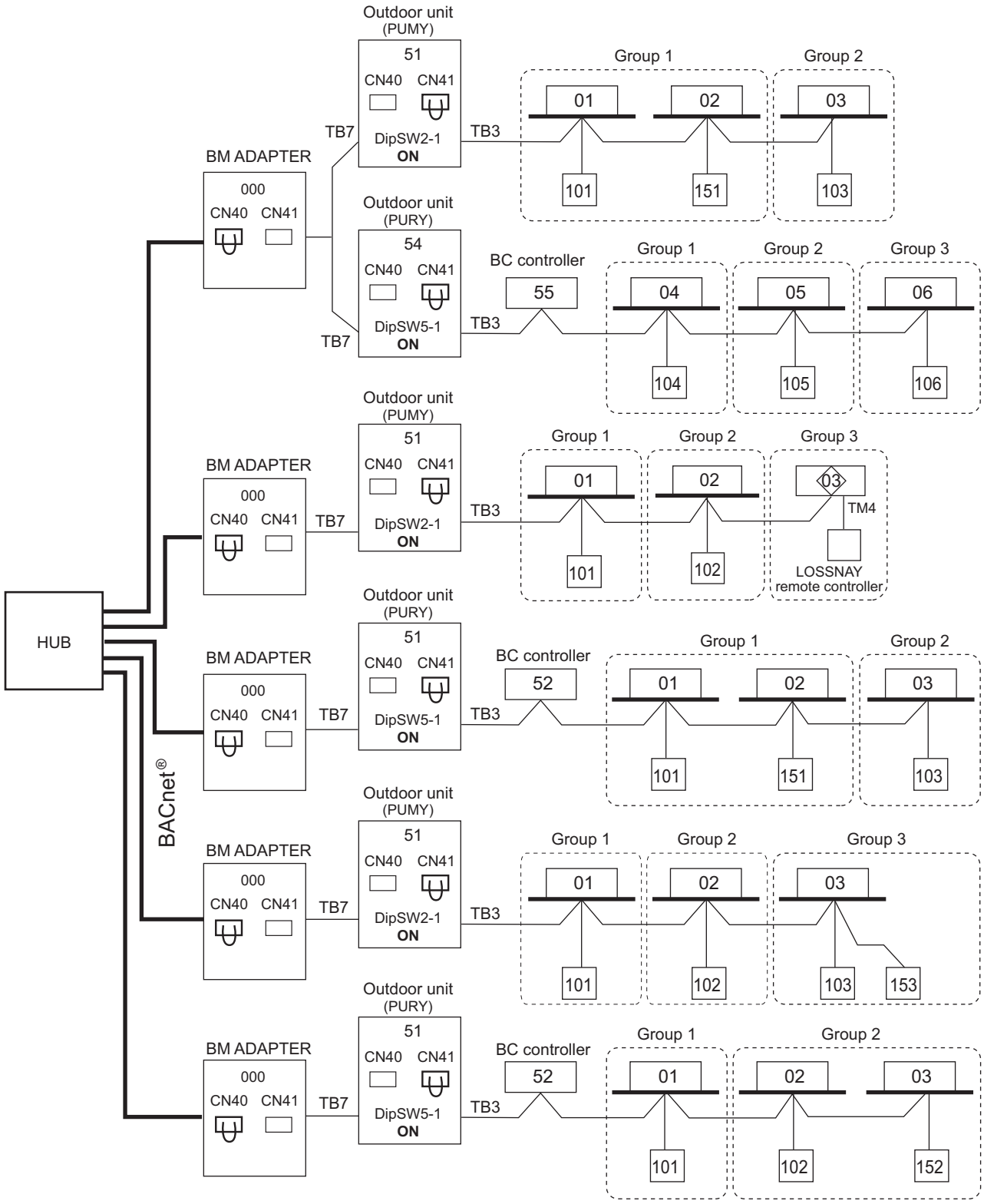

10-4-3-10. BM ADAPTER + PAC-YG50ECA (Expansion controller)

BM ADAPTER*1 can transmit max. 150 indoor units via expansion controllers (PAC-YG50ECA).
When the dual-set-point function is used, no expansion controllers can be connected, and only up to 50 units can be controlled from each BAC-HD150.

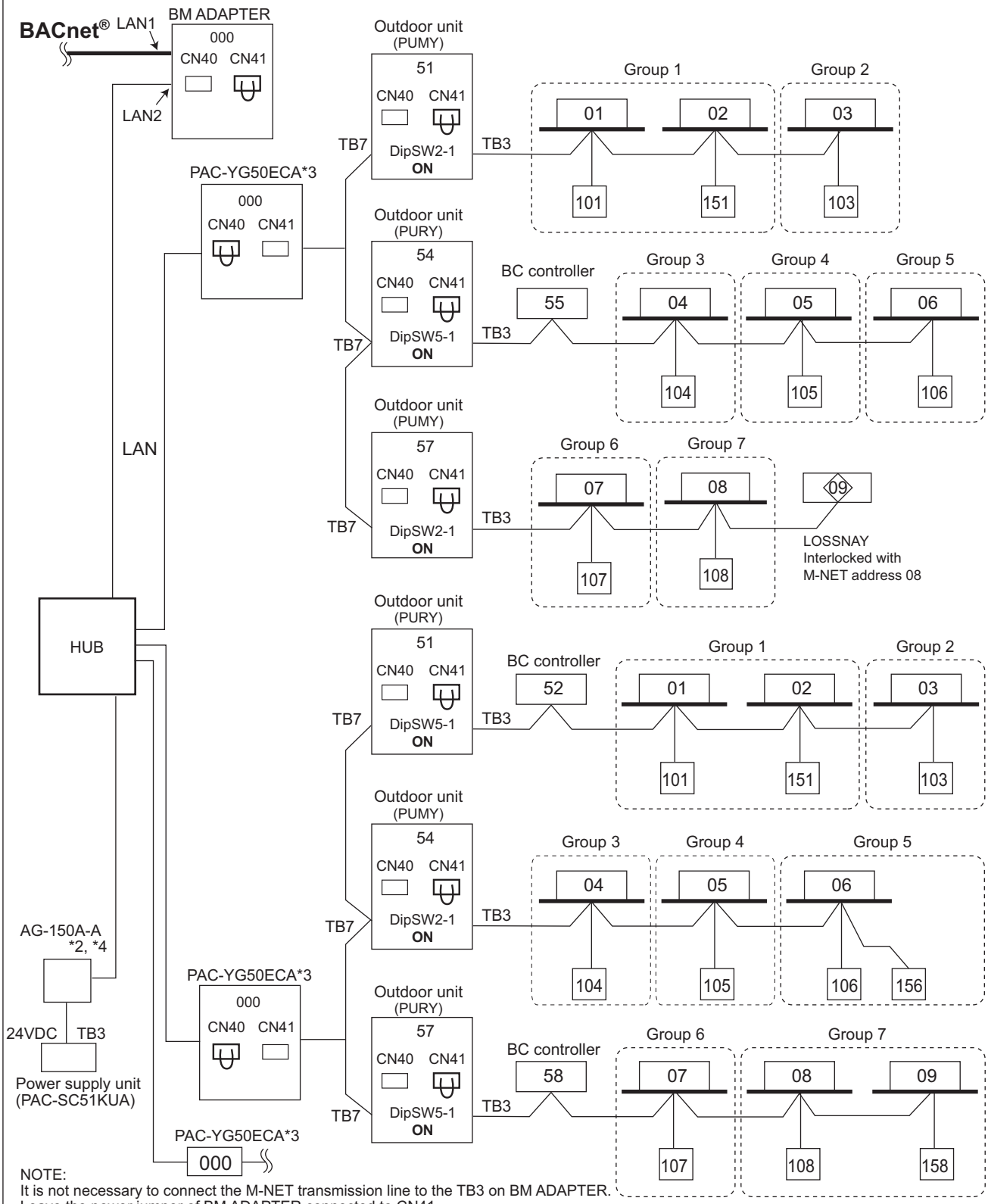

NOTE:
It is not necessary to connect the M-NET transmission line to the TB3 on BM ADAPTER.
Leave the power jumper of BM ADAPTER connected to CN41.

*1 BM ADAPTER (Ver. 2.00 or later) supports the expansion controller.
*2 AG-150A-A (Ver. 2.30 or later) supports the BM ADAPTER.
*3 PAC-YG50ECA (Ver. 1.30 or later) supports the BM ADAPTER.
*4 Consult your dealer for restrictions when connecting both AG-150A-A and BM ADAPTER to PAC-YG50ECA.

11-1. R410A Piping material

The maximum operation pressure of R410A air conditioner is 4.15 MPa [601 psi]. The refrigerant piping should ensure the safety under the maximum operation pressure. You shall follow the local industrial standard.

11-2. Piping Design

11-2-1. PUMY-P36, 48NKMU3/PUMY-HP36, 48NKMU1 Piping

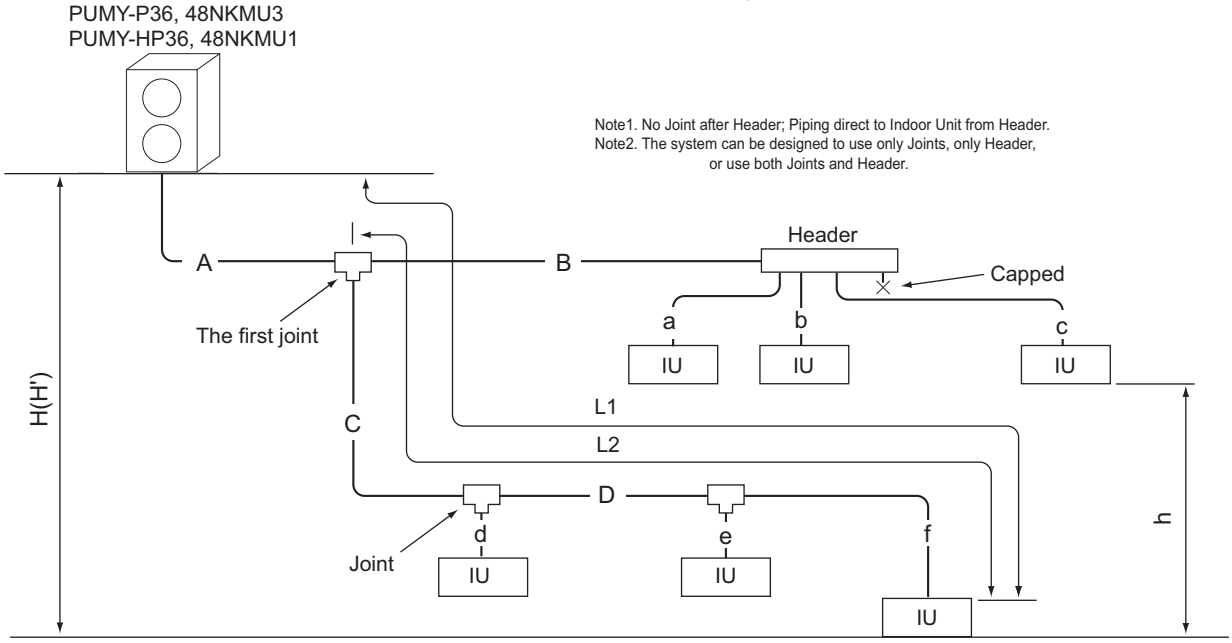

Fig. 11-2-1A Piping scheme

IU : Indoor unit , OU : Outdoor unit

Table11-2-1-1. Piping length (m [ft.])

Item	Piping in the figure	Max. length
Total piping length	A+B+C+D+a+b+c+d+e+f	300 [984']
Farthest IU from OU (L1)	A+C+D+f / A+B+c	150 [492']
Farthest IU from the first Joint (L2)	C+D+f / B+c	30 [98']
Height between OU and IU (OU above IU)	H	50 [164']
Height between OU and IU (OU under IU)*	H'	40 [131']
Height between IU and IU	h	15 [49']

OU: Outdoor Unit, IU: Indoor Unit
* When PKFY-P06NBMU, PKFY-P08NHMU, PKFY-P04/06/08/12NLMU, PFFY-P06/08/12NEMU, or PFFY-P06/08/12NRMU is included, use within 98ft [30m].

Table11-2-1-2. Piping "A"size selection rule (mm [in.])

Outdoor and the first-Joint/Header		Pipe(Liquid)	Pipe(Gas)
PUMY-P36, 48NKMU3 PUMY-HP36, 48NKMU1	=CMY-Y62-G-E	ø9.52 [3/8"]	ø15.88 [5/8"]
PUMY-P36, 48NKMU3 PUMY-HP36, 48NKMU1	=CMY-Y64,Y68-G-Eb	ø9.52 [3/8"]	ø15.88 [5/8"]

Table11-2-1-3. Piping "B","C","D"size selection rule (mm [in.])

Pipe(Liquid)	Pipe(Gas)
ø9.52 [3/8"]	ø15.88 [5/8"]

Table11-2-1-4. Piping "a","b","c","d","e","f"size selection rule (mm [in.])

Indoor Unit size	Pipe(Liquid)	Pipe(Gas)
P04,P05,P06,P08,P12,P15,P18	ø6.35 [1/4"]	ø12.70 [1/2"]
P24,P27,P30,P36,P48,P54	ø9.52 [3/8"]	ø15.88 [5/8"]

Table11-2-1-5. Joint, Header selection rule

Joint	4-branch Header	8-branch Header
CMY-Y62-G-E	CMY-Y64-G-E	CMY-Y68-G-E

* For details of installation of Joint, header, and distributor, refer to its Installation Manual.

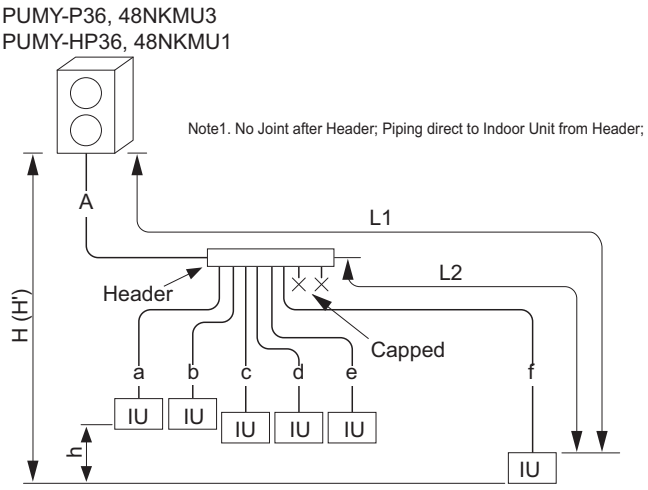

Fig. 11-2-1B Piping scheme

Table11-2-1B1. Piping length (m [ft.])

Item	Piping in the figure	Max. length
Total piping length	A+a+b+c+d+e+f	300 [984']
Farthest IU from OU (L1)	A+f	150 [492']
Farthest IU from Header (L2)	f	30 [98']
Height between OU and IU (OU above IU)	H	50 [164']
Height between OU and IU (OU under IU)*	H'	40 [131']
Height between IU and IU	h	15 [49']

* When PKFY-P06NBMU, PKFY-P08NHMU, PFFY-P06/08/12NEMU, or PFFY-P06/08/12NRMU is included, use within 98ft [30m].

11-2-2. PUMY-P60NKMU3

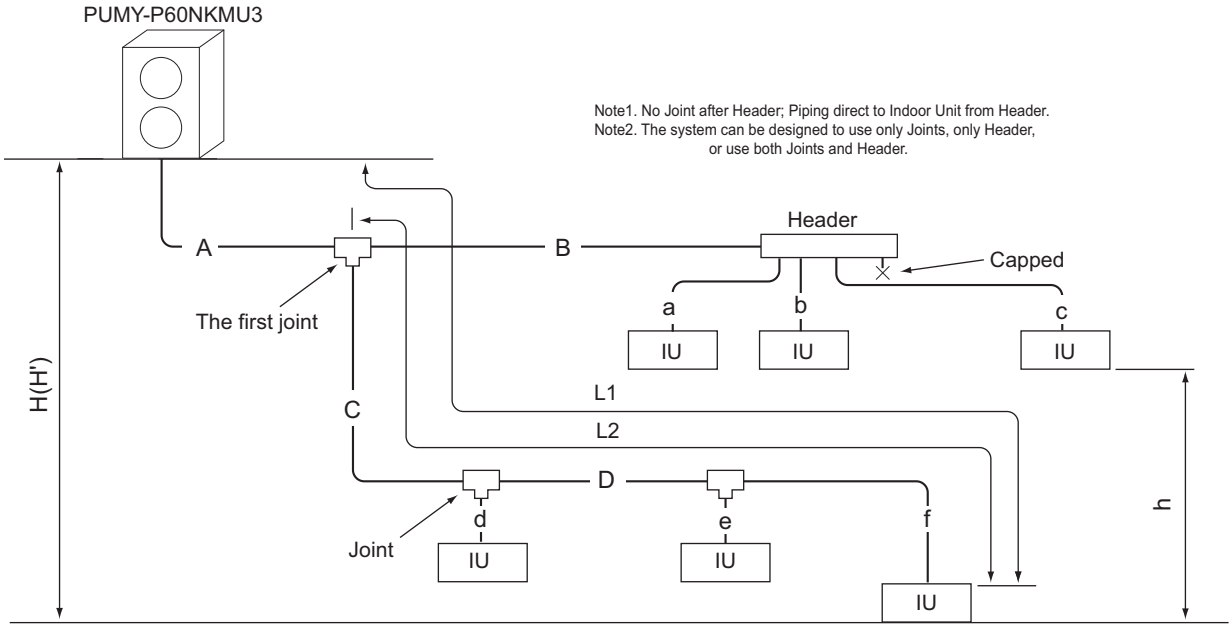

Fig. 11-2-2A Piping scheme

IU : Indoor unit , OU : Outdoor unit

Table11-2-2-1. Piping length (m [ft.])

Item	Piping in the figure	Max. length
Total piping length	A+B+C+D+a+b+c+d+e+f	150 [492']
Farthest IU from OU (L1)	A+C+D+f / A+B+c	80 [262']
Farthest IU from the first Joint (L2)	C+D+f / B+c	30 [98']
Height between OU and IU (OU above IU)	H	50 [164']
Height between OU and IU (OU under IU)	H'	40 [131']
Height between IU and IU	h	15 [49']

OU: Outdoor Unit, IU: Indoor Unit

Table11-2-2-2. Piping "A"size selection rule (mm [in.])

Outdoor and the first-Joint/Header	Pipe(Liquid)	Pipe(Gas)
PUMY-P60NKMU3=CMY-Y62-G-E	ø9.52 [3/8"]	ø19.05 [3/4"]
PUMY-P60NKMU3=CMY-Y64,Y68-G-Eb	ø9.52 [3/8"]	ø19.05 [3/4"]

Table11-2-2-3. Piping "B","C","D"size selection rule (mm [in.])

	Pipe(Liquid)	Pipe(Gas)
	ø9.52 [3/8"]	ø19.05 [3/4"]

Table11-2-2-4. Piping "a","b","c","d","e","f"size selection rule (mm [in.])

Indoor Unit size	Pipe(Liquid)	Pipe(Gas)
P04,P05,P06,P08,P12,P15,P18	ø6.35 [1/4"]	ø12.70 [1/2"]
P24,P27,P30,P36,P48,P54	ø9.52 [3/8"]	ø15.88 [5/8"]
P72	ø9.52 [3/8"]	ø19.05 [3/4"]

Table11-2-2-5. Joint, Header selection rule

Joint	4-branch Header	8-branch Header
CMY-Y62-G-E	CMY-Y64-G-E	CMY-Y68-G-E

* For details of installation of Joint, header, and distributor, refer to its Installation Manual.

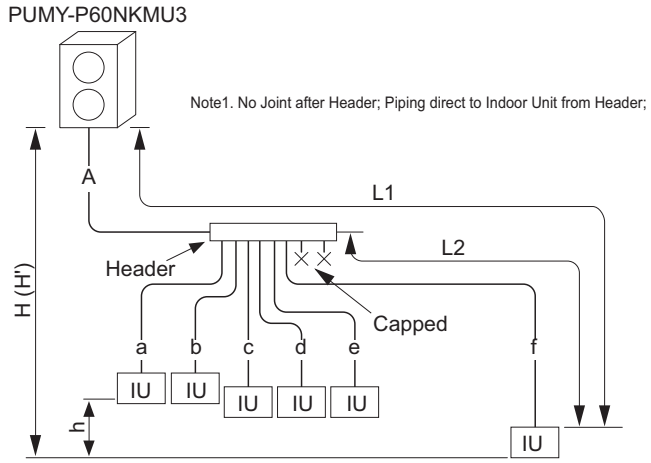

Fig. 11-2-2B Piping scheme

Table11-2-2B1. Piping length (m [ft.])

Item	Piping in the figure	Max. length
Total piping length	A+a+b+c+d+e+f	150 [492']
Farthest IU from OU (L1)	A+f	80 [262']
Farthest IU from Header (L2)	f	30 [98']
Height between OU and IU (OU above IU)	H	50 [164']
Height between OU and IU (OU under IU)	H'	40 [131']
Height between IU and IU	h	15 [49']

11-3. Refrigerant charging calculation

11-3-1. PUMY-P36, 48NKMU3/PUMY-HP36, 48NKMU1

Additional refrigerant charge

Refrigerant for the extended piping is not included in the outdoor unit when the unit is shipped from the factory.
Therefore, charge each refrigerant piping system with additional refrigerant at the installation site. In addition, in order to carry out service, enter the size and length of each liquid pipe and additional refrigerant charge amounts in the spaces provided on the “Refrigerant amount” plate on the outdoor unit.

Calculation of additional refrigerant charge

- Calculate the additional charge using the liquid pipe size and length of the extended piping.
- Calculate the additional refrigerant charge using the procedure shown to the right, and charge with the additional refrigerant.
- For amounts less than 0.1 kg, round up the calculated additional refrigerant charge.
  (For example, if the calculated charge is 10.92 kg, round up the charge to 11.0 kg.)

Additional refrigerant charge	=	Pipe size Liquid pipe ø6.35	+	Pipe size Liquid pipe ø9.52	+	Total capacity of connected indoor units	Pipe size Liquid pipe ø9.52
(kg) [oz]		(m) x 0.019 (kg/m) 0.21 [oz/ft.]		(m) x 0.05 (kg/m) x 0.55 [oz/ft.]		– 27 kBtu/h	1.5 kg (53 oz)
						28 – 54 kBtu/h	2.5 kg (88 oz)
						55 – kBtu/h	3.0 kg (106 oz)

Example:

Indoor 1: P24 A=ø9.52 [3/8"] 30 m [98 ft.] a=ø9.52 [3/8"] 15 m [49 ft.]
Indoor 2: P15 b=ø6.35 [1/4"] 10 m [33 ft.]
Indoor 3: P08 c=ø6.35 [1/4"] 10 m [33 ft.]
Indoor 4: P08 d=ø6.35 [1/4"] 20 m [66 ft.]

Total length of each liquid pipe is as follows
ø9.52 [3/8"] A + a = 30 + 15 = 45 m [148 ft.]
ø6.35 [1/4"] b + c + d = 10 + 10 + 20 = 40 m [131 ft.]

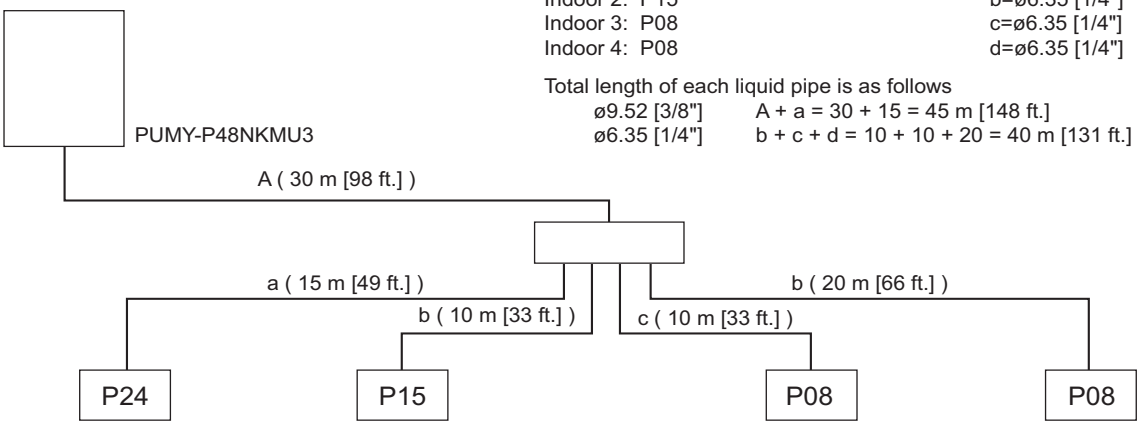

Additional refrigerant charge	=	Total length of liquid pipe sized ø9.52 x 0.05 (kg/m)	+	Total length of liquid pipe sized ø6.35 x 0.019 (kg/m)	+	Total capacity of connected indoor units	Pipe size Liquid pipe ø9.52
(kg)		45 (m) x 0.05 (kg/m)		40 (m) x 0.019 (kg/m)		– 27 kBtu/h	1.5 kg (53 oz)
						28 – 54 kBtu/h	2.5 kg (88 oz)
						55 – kBtu/h	3.0 kg (106 oz)

= 2.25 + 0.76 + 3.00

= 6.01

≈ 6.1 kg (round-up)

Additional refrigerant charge	=	Total length of liquid pipe sized ø3/8" x 0.55 [oz/ft.]	+	Total length of liquid pipe sized ø1/4" x 0.21 [oz/ft.]	+	Total capacity of connected indoor units	Pipe size Liquid pipe ø9.52
(oz)		147 (ft.) x 0.55 [oz/ft.]		129 (ft.) x 0.21 [oz/ft.]		– 27 kBtu/h	1.5 kg (53 oz)
						28 – 54 kBtu/h	2.5 kg (88 oz)
						55 – kBtu/h	3.0 kg (106 oz)

= 80.85 + 27.09 + 106

= 213.94

≈ 214 [oz] (round-up)

11-3-2. PUMY-P60NKMU3

Additional refrigerant charge

Refrigerant for the extended piping is not included in the outdoor unit when the unit is shipped from the factory.
Therefore, charge each refrigerant piping system with additional refrigerant at the installation site. In addition, in order to carry out service, enter the size and length of each liquid pipe and additional refrigerant charge amounts in the spaces provided on the “Refrigerant amount” plate on the outdoor unit.

Calculation of additional refrigerant charge

- Calculate the additional charge using the liquid pipe size and length of the extended piping.
- Calculate the additional refrigerant charge using the procedure shown to the right, and charge with the additional refrigerant.
- For amounts less than 0.1 kg, round up the calculated additional refrigerant charge.
  (For example, if the calculated charge is 32.92 kg, round up the charge to 33.0 kg.)

Additional refrigerant charge	=	Pipe size Liquid pipe ø6.35	+	Pipe size Liquid pipe ø9.52	+	Total capacity of connected indoor units	Amount for the indoor units
(kg) [oz]		(m) × 0.027 (kg/m) 0.29 (oz/ft)		(m) × 0.07 (kg/m) 0.75 (oz/ft)		– 27 kBtu/h	1.5 kg (53 oz)
						28 – 54 kBtu/h	2.5 kg (88 oz)
						55 – kBtu/h	3.0 kg (106 oz)

Example:

Indoor 1: P24 A=ø9.52 [3/8"] 30 m [98 ft.] a=ø9.52 [3/8"] 15 m [49 ft.]
Indoor 2: P15 b=ø6.35 [1/4"] 10 m [33 ft.]
Indoor 3: P08 c=ø6.35 [1/4"] 10 m [33 ft.]
Indoor 4: P08 d=ø6.35 [1/4"] 20 m [66 ft.]

Total length of each liquid pipe is as follows
ø9.52 [3/8"] A + a = 30 + 15 = 45 m [148 ft.]
ø6.35 [1/4"] b + c + d = 10 + 10 + 20 = 40 m [131 ft.]

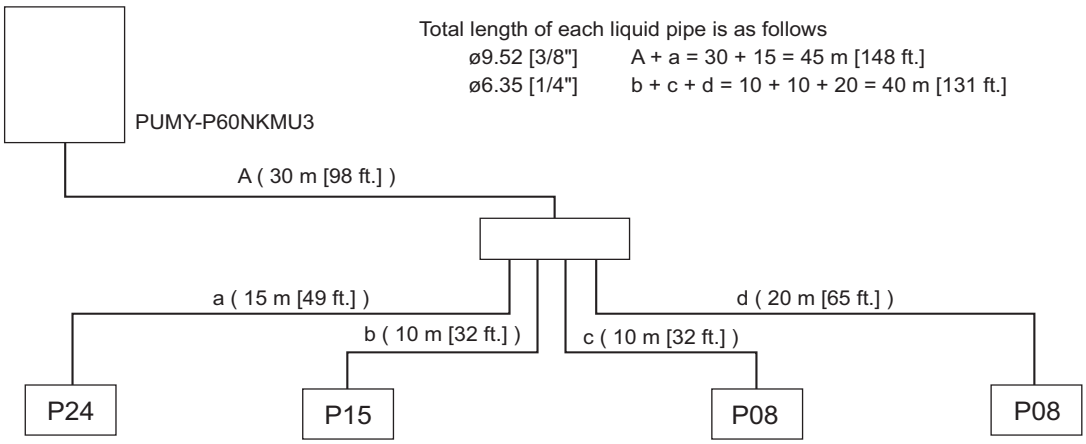

Additional refrigerant charge	=	Total length of liquid pipe sized ø9.52 x 0.07 (kg/m)	+	Total length of liquid pipe sized ø6.35 x 0.027 (kg/m)	+	Total capacity of connected indoor units	Amount for the indoor units
(kg)		45 (m) x 0.07 (kg/m)		40 (m) x 0.027 (kg/m)		– 27 kBtu/h	1.5 kg (53 oz)
						28 – 54 kBtu/h	2.5 kg (88 oz)
						55 – kBtu/h	3.0 kg (106 oz)

= 3.15 + 1.08 + 3.0

= 7.23

≈ 7.3 kg (round-up)

Additional refrigerant charge	=	Total length of liquid pipe sized ø3/8" x 0.75 [oz/ft.]	+	Total length of liquid pipe sized ø1/4" x 0.29 [oz/ft.]	+	Total capacity of connected indoor units	Amount for the indoor units
(oz)		148 (ft.) x 0.75 [oz/ft.]		131 (ft.) x 0.29 [oz/ft.]		– 27 kBtu/h	1.5 kg (53 oz)
						28 – 54 kBtu/h	2.5 kg (88 oz)
						55 – kBtu/h	3.0 kg (106 oz)

= 111.00 + 37.99 + 106

= 254.99

≈ 255 [oz] (round-up)

12-1. Requirement on installation site

12-1-1. General caution

A. Avoid locations exposed to direct sunlight or other sources of heat.
B. Select a location from which noise emitted by the unit will not inconvenience the neighbors.
C. Select a location permitting easy wiring and pipe access to the power source and indoor unit.
D. Avoid locations where combustible gases may leak, be produced, flow, or accumulate.
E. Note that water may drain from the unit during operation.
F. Select a level location that can bear the weight and vibration of the unit.
G. Avoid locations where the unit can be covered by snow. In areas where heavy snow fall is anticipated, special precautions such as raising the installation location or installing a hood on the air intake must be taken to prevent the snow from blocking the air intake or blowing directly against it. This can reduce the airflow and a malfunction may result.
H. Avoid locations exposed to oil, steam, or sulfuric gas.
I. Use the transportation handles of the outdoor unit to transport the unit. If the unit is carried from the bottom, hands or fingers may be pinched.

12-1-2. Installation at windy location.

When installing the outdoor unit on a rooftop or other location unprotected from the wind, situate the air outlet of the unit so that it is not directly exposed to strong winds.Strong wind entering the air outlet may impede the normal airflow and a malfunction may result.
The following shows two examples of precautions against strong winds.
① Install an optional air guide if the unit is installed in a location where strong winds from a typhoon, etc. may directly enter the air outlet. (Fig. 12-1-2a)
Ⓐ Front wind baffle
② Position the unit so that the air outlet blows perpendicularly to the seasonal wind direction, if possible. (Fig. 12-1-2b)
Ⓑ Wind direction

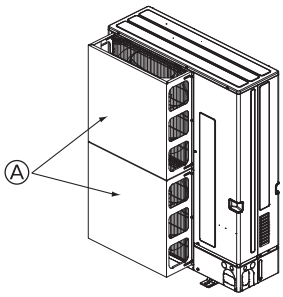

Fig. 12-1-2a

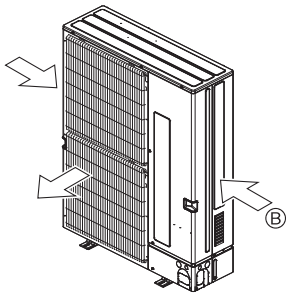

Fig. 12-1-2b

12-1-3. Foundation

A. Be sure to install the unit in a sturdy, level surface to prevent rattling noises during operation. (see Fig. 12-1-3)
B. Foundation specifications are as follows. mm [in.]

Thickness of concrete	Weight-bearing capacity	Foundation bolt	Bolt length
120 [4-23/32"]	320 kg [705lbs]	M10 [3/8"]	70 [2-3/4"]

C. Make sure that the length of the foundation bolt is within 30 mm [1-3/16"] of the bottom surface of the base.
D. Secure the base of the unit firmly with four-M10 [3/8"] foundation bolts in sturdy locations.

⚠ Warning:
A. The foundation base should be strong enough to support the outdoor unit, otherwise, it may fall down and cause damage or injures.
B. The unit must be installed according to the instructions in order to minimize the risk of damage from earthquakes, typhoons, or strong winds.

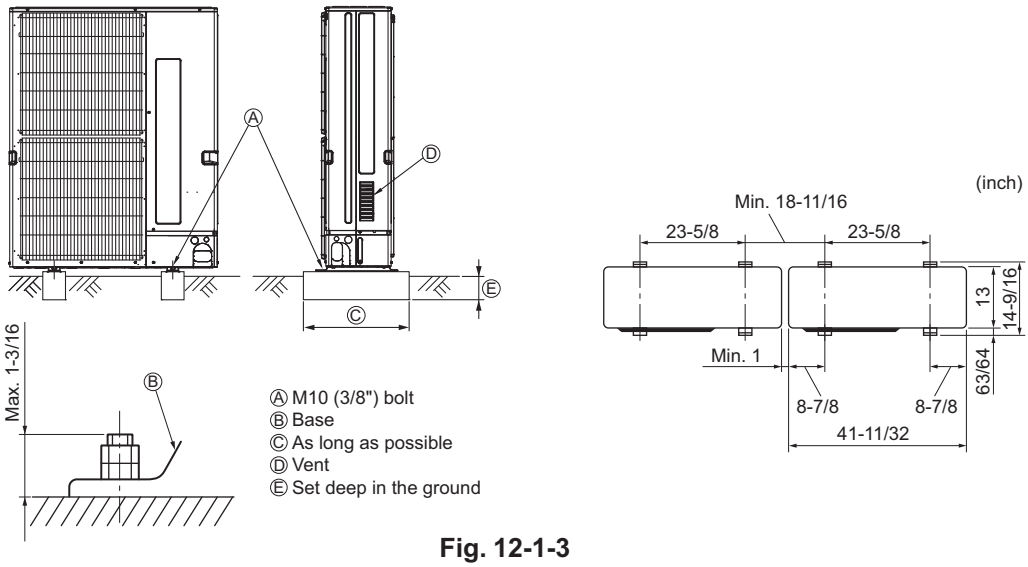

Fig. 12-1-3

12-2. Spacing

External dimension.

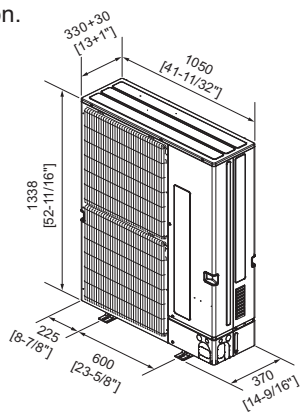

Fig. 12-2-1

12-2-1. Spacing individual PUMY-P-NKMU3/ PUMY-HP-NKMU1

Follow Fig. 12-2-2~7 to space individual PUMY-P-NKMU3/ PUMY-HP-NKMU1 at the installation site.

mm[in.]

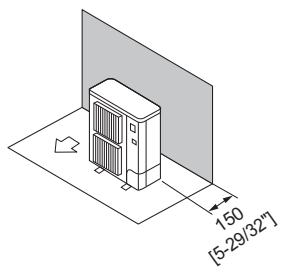

Fig. 12-2-2
Obstacles at rear only

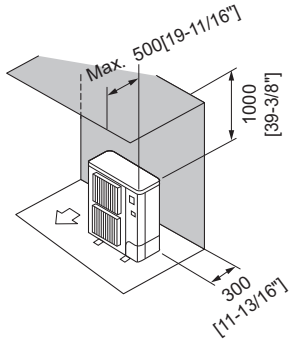

Fig. 12-2-3
Obstacles at rear and above only

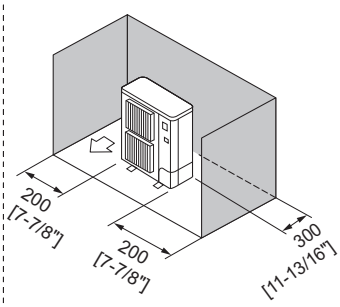

Fig. 12-2-4
Obstacles at rear and sides only

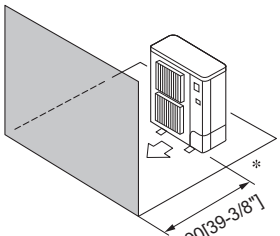

* Using an optional air outlet guide, the clearance >= 500 mm [19-11/16"].

Fig. 12-2-5
Obstacles at front only

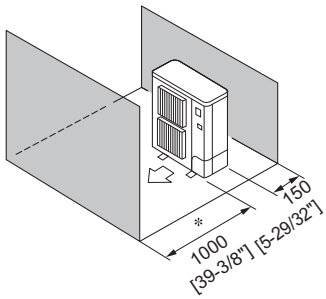

* Using an optional air outlet guide, the clearance >= 500 mm [19-11/16"].

Fig. 12-2-6
Obstacles at front and rear only

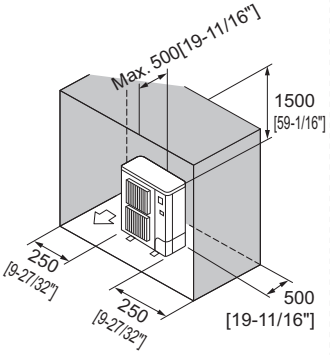

* NO upward airflow outlet guide.

Fig. 12-2-7
Obstacles at rear, sides and above only

12-2-2. Spacing grouped PUMY-P-NKMU3/ PUMY-HP-NKMU1

Follow Fig. 12-2-8~13 to space grouped PUMY-P-NKMU3/ PUMY-HP-NKMU1 at the installation site. Leave 10 mm [13/32"] space or more between PUMY-P-NKMU3/PUMY-HP-NKMU1 units.

mm[in.]

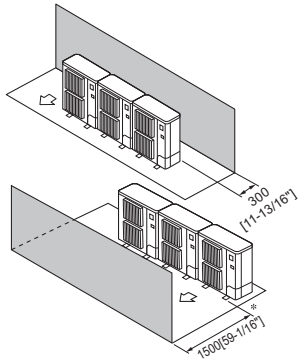

* When using an optional air outlet guide, the clearance is 1000 mm [39-3/8"] or more.

Fig. 12-2-8
Obstacles at rear or front only

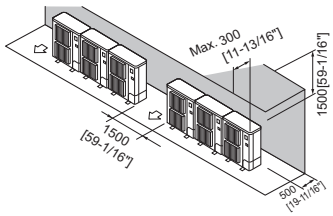

* In case of side-by-side installation, <=3 units;
* Do not install the optional air outlet guides for upward airflow.

Fig. 12-2-9
Obstacles at rear and above only

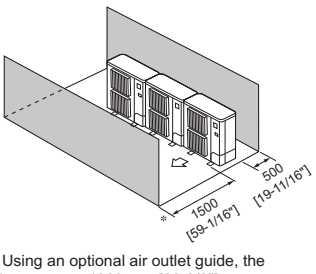

* Using an optional air outlet guide, the clearance >= 1000 mm [39-3/8"].

Fig. 12-2-10
Obstacles at front and rear only

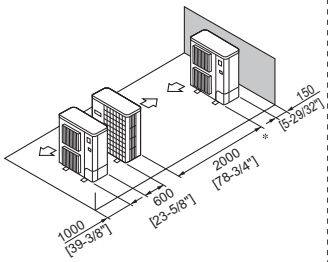

* Using an optional air outlet guide, the clearance >= 1000 mm [39-3/8"].

Fig. 12-2-11
Parallel individuals arrangement

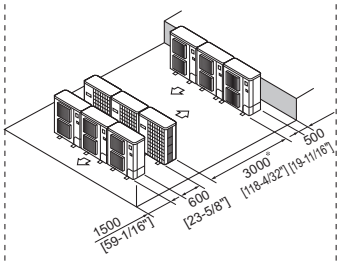

* Using an optional air outlet guide for upward airflow, the clearance >= 1500 mm [59-1/16"].

Fig. 12-2-12
Parallel groups arrangement

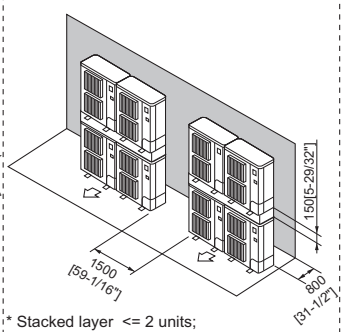

* Stacked layer <= 2 units;
* Side-by-side stacked groups <= 2 groups;

Fig. 12-2-13
Stacked groups arrangement

12-3. Piping direction

12-3-1. PUMY-P-NKMU3/PUMY-HP-NKMU1

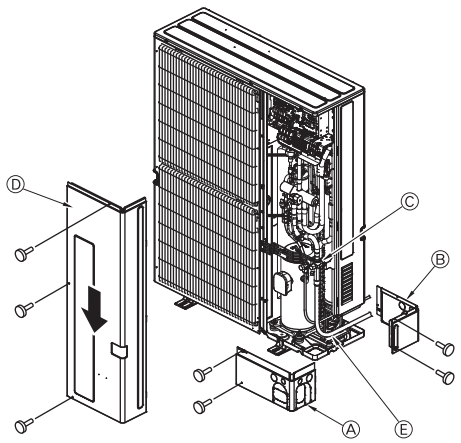

Ⓐ Front piping cover
Ⓑ Piping cover
Ⓒ Stop valve
Ⓓ Service panel
Ⓔ Bend radius : 100 mm [3-15/16"] - 150 mm [5-7/8"]

for a greener tomorrow

Eco Changes is the Mitsubishi Electric Group's environmental statement, and expresses the Group's stance on environmental management. Through a wide range of businesses, we are helping contribute to the realization of a sustainable society.

⚠Warning

■ Do not use refrigerant other than the type indicated in the manuals provided with the unit and on the nameplate.
- Doing so may cause the unit or pipes to burst, or result in explosion or fire during use, repair, or at the time of disposal of the unit.
- It may also be in violation of applicable laws.
- MITSUBISHI ELECTRIC CORPORATION cannot be held responsible for malfunctions or accidents resulting from the use of the wrong type of refrigerant.

■ Our air conditioning equipment and heat pumps contain a fluorinated greenhouse gas, R410A.

MITSUBISHI ELECTRIC CORPORATION
HEAD OFFICE: TOKYO BUILDING, 2-7-3, MARUNOUCHI, CHIYODA-KU, TOKYO 100-8310, JAPAN
www.MitsubishiElectric.com

M-P0802

New publication effective February 2020
Specifications subject to change without notice