M-SERIES

SUBMITTAL DATA: PEAD-A12AA7 & SUZ-KA12NAR1

12,000 BTU/H HORIZONTAL-DUCTED HEAT PUMP SYSTEM

Job Name:	
System Reference:	Date:

Indoor Unit: PEAD-A12AA7	Outdoor Unit: SUZ-KA12NAR1
	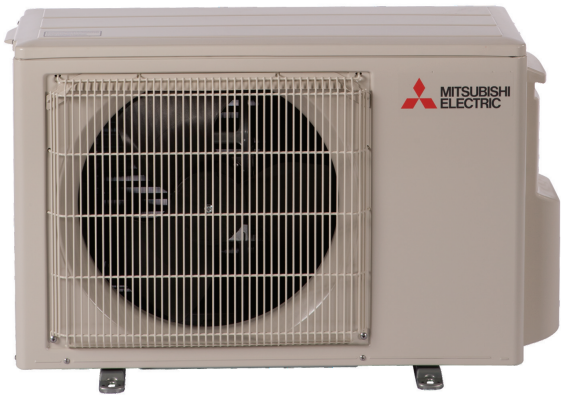

INDOOR UNIT FEATURES

- Unobtrusive ceiling-concealed design for short-run ductwork.
- Wide ranging external static pressure (0.14-0.60 in. WG)
- Built-in condensate lift mechanism (up to 27-9/16")
- Auto fan speed mode
- Optional FB Series filter boxes for easy access and service
- Ideal for residential homes,retail shopping centers, larger classrooms, office complexes, conference ballrooms, fitness centers, and more

OUTDOOR UNIT FEATURES

- Variable speed INVERTER-driven compressor
- Innovative Joint Lap DC Motor leads to high efficiency and reliability
- Pulse Amplitude Modulation technology
- High-performance grooved piping for increased heat exchange efficiency

Specifications are subject to change without notice.

© 2019 Mitsubishi Electric Trane HVAC US LLC. All rights reserved.

SPECIFICATIONS: PEAD-A12AA7 & SUZ-KA12NAR1

Cooling[1]	Maximum Capacity	Btu/h	12,000
	Rated Capacity	Btu/h	12,000
	Minimum Capacity	Btu/h	5,200
	Maximum Power Input	W	950
	Rated Power Input	W	950
	Moisture Removal	Pints/h	1.70
	Sensible Heat Factor		0.84
	Power factor	%	94
Heating at 47°F[2]	Maximum Capacity	Btu/h	16,300
	Rated Capacity	Btu/h	16,300
	Minimum Capacity	Btu/h	5,700
	Maximum Power Input	W	1,240
	Rated Power Input	W	1,240
	Power factor	%	93
Heating at 17°F[3]	Maximum Capacity	Btu/h	8,200
	Rated Capacity	Btu/h	8,200
	Maximum Power Input	W	900
	Rated Power Input	W	900
Efficiency	SEER		18.6
	EER[1]		12.6
	HSPF (IV)		10.9
	COP at 47° F[2]		3.80
	COP at 17° F[3]		2.60
	ENERGY STAR® Certified (ENERGY STAR products are third-party certified by an EPA-recognized Certification Body.)		Yes
Electrical	Voltage, Phase, Frequency		208 / 230V, 1-phase, 60 Hz
	Guaranteed Voltage Range	V AC	187 - 253
	Voltage: Indoor - Outdoor, S1-S2	V AC	208 / 230
	Voltage: Indoor - Outdoor, S2-S3	V DC	24
	Voltage: Indoor - Remote Controller		Wireless Type
	Recommended Fuse/Breaker Size	A	15
	Recommended Wire Size (Indoor - Outdoor)	AWG	14
Indoor unit	MCA	A	1.45
	Fan Motor Full Load Amperage	A	1.16
	Fan Motor Output	W	85
	Airflow Rate, Dry	CFM	353-424-494
	Airflow Rate, Wet	CFM	318-382-445
	External Static Pressure	in.WG	0.14-0.20-0.28-0.40-0.60
	Sound Pressure Level at 0.14 in. WG	dB(A)	28-30-34
	Drain Pipe Size	In. (mm)	1-1/4 (32)
	Condensate Lift Mechanism, Max. Distance	In. (mm)	27-9/16 (700)

Specifications are subject to change without notice.

© 2019 Mitsubishi Electric Trane HVAC US LLC. All rights reserved.

SPECIFICATIONS: PEAD-A12AA7 & SUZ-KA12NAR1

	Heat Exchanger Type		Plate fin coil
	External finish color		Galvanized
	Unit Dimensions	W: In. (mm)	35-7/16 (900)
		D: In. (mm)	28-7/8 (732)
		H: In. (mm)	9-7/8 (250)
	Package Dimensions	W: In.	45-5/16
		D: In.	34-11/16
		H: In.	13-7/16
	Unit Weight	Lbs. (kg)	58 (26)
	Package Weight	Lbs.	69
Indoor unit operating temperature range	Cooling Intake Air Temp (Maximum / Minimum)	°F	90 DB, 73 WB / 66 DB, 59 WB
	Heating Intake Air Temp (Maximum / Minimum)	°F	82 DB / 50 DB
Outdoor Unit	MCA	A	12
	MOCP	A	15
	Fan Motor Full Load Amperage	A	0.5
	Fan Motor Output	W	55
	Airflow Rate	CFM	1,229 / 1.172
	Refrigerant Control		LEV
	Defrost Method		Reverse cycle
	Heat Exchanger Type		Plate fin coil
	Sound Pressure Level, Cooling[1]	dB(A)	49
	Sound Pressure Level, Heating[2]	dB(A)	51
	Compressor Type		DC INVERTER-driven
	Compressor Model		KNB092FQAHC
	Compressor Rated Load Amps	A	6.6
	Compressor Locked Rotor Amps	A	8.2
	Compressor Oil Type // Charge	oz.	NEO22 // 10.8
	External Finish Color		Munsell 3Y 7.8/1/1
	Base Pan Heater		Optional (MAC-640BH-U)
	Unit Dimensions	W: In. (mm)	31-1/2 (800)
		D: In. (mm)	11-1/4 (285)
		H: In. (mm)	21-5/8 (550)
	Package Dimensions	W: In. (mm)	37 (940)
		D: In. (mm)	14-15/16 (380)
		H: In. (mm)	24-13/16 (630)
	Unit Weight	Lbs. (kg)	77 (35)
	Package Weight	Lbs. (kg)	84 (38)
Outdoor Unit Operating Temperature Range	Cooling Air Temp (Maximum / Minimum)	°F	115 / 14
	Cooling Thermal Lock- out / Re-start Temperatures**	°F	-7 / -4
	Heating Air Temp (Maximum / Minimum)	°F	75 / 12
	Heating Thermal Lock- out / Re-start Temperatures**	°F	-7 / -4

Specifications are subject to change without notice.

© 2019 Mitsubishi Electric Trane HVAC US LLC. All rights reserved.

SPECIFICATIONS: PEAD-A12AA7 & SUZ-KA12NAR1

Refrigerant	Type		R410A
	Charge	Lbs, oz	2, 9
Piping	Gas Pipe Size O.D. (Flared)	In.(mm)	3/8 (9.52)
	Liquid Pipe Size O.D. (Flared)	In.(mm)	1/4 (6.35)
	Maximum Piping Length	Ft. (m)	65 (20)
	Maximum Height Difference	Ft. (m)	40 (12)
	Maximum Number of Bends		10

Notes

AHRI Rated Conditions (Rated data is determined at a fixed compressor speed)	[1]Cooling (Indoor // Outdoor)	°F	80 DB, 67 WB // 95 DB, 75 WB
	[2]Heating at 47°F (Indoor // Outdoor)	°F	70 DB, 60 WB // 47 DB, 43 WB
	[3]Heating at 17°F (Indoor // Outdoor)	°F	70 DB, 60 WB // 17 DB, 15 WB
*Applications should be restricted to comfort cooling only; equipment cooling applications are not recommended for low ambient temperature conditions. **System cuts out at -7ºF (-21.7ºC) to avoid thermistor error and automatically restarts at -4ºF (-20ºC).			

Specifications are subject to change without notice.

© 2019 Mitsubishi Electric Trane HVAC US LLC. All rights reserved.

ACCESSORIES: PEAD-A12AA7

Filter Box with MERV 13 Filters	□ FBM2-2
Wireless Signal Receiver	□ PAR-SA9CA-E
Wireless Signal Receiver	□ PAR-FA32MA-W
Wireless Signal Receiver	□ PAR-FA32MA-E
Wireless Remote Controller	□ PAR-FL32MA-E
Backlit, Wall-mounted, Wireless Controller	□ MHK1
Portable Central Controller	□ MCCH1
Wired MA Controller	□ PAR-33MAA
Simple MA Controller	□ PAC-YT53CRAU
Touch MA Controller	□ PAR-CT01MAU-SB
Airzone ZBS Wired Blueface Principal Controller White	□ AZZBSBLUEFACECB
Airzone ZBS Wired Think Controller White	□ AZZBSTHINKCB
Airzone ZBS Wireless Think Controller White	□ AZZBSTHINKRB
Airzone ZBS Wired Lite Controller White	□ AZZBSLITECB
Airzone ZBS Wireless Lite Controller White	□ AZZBSLITERB
Wired Remote Sensor	□ PAC-SE41TS-E
Wireless Temperature and Humidity Sensor	□ PAC-USWHS003-TH-1
Outside Air Sensor for MHK1	□ MOS1
Flush Mount Remote Temperature Sensor	□ PAC-USSEN001-FM-1
System Control Interface	□ MAC-333IF-E
Wireless Interface	□ PAC-USWHS002-WF-1
Thermostat Interface	□ PAC-US444CN-1
kumo station®	□ PAC-WHS01HC-E
USNAP Interface	□ PAC-WHS01UP-E
IT Extender	□ PAC-WHS01IE-E
BACnet® and MODBUS® Interface	□ PAC-UKPRC001-CN-1
External Fan / Heater Control Relay Adapter	□ CN24RELAY-KIT-CM3
Connector cable for remote display	□ PAC-SA88HA-EP
Connector for CN32 (remote on/off)	□ PAC-SE55RA-E
Lockdown Bracket for Hand-held Remote Controllers	□ RCMKP1CB
Remote Operation Adapter[1]	□ PAC-SF40RM-E
Blue Diamond Sensor Extension Cable — 15 Ft.	□ C13-103
MegaBlue Advanced Blue Diamond Condensate Pump w/ Reservoir & Sensor	□ X87-835 - 110 to 250V
Advanced Blue Diamond Mini Condensate Pump w/ Reservoir & Sensor (208/230V) [recommended]	□ X87-721 - 208/230V
Drain Pan Level Sensor	□ DPLS2
(30A/600V/UL) [fits 2" X 4" utility box] - Black	□ TAZ-MS303
(30A/600V/UL) [fits 2" X 4" utility box] - White	□ TAZ-MS303W

[1] Unable to use with wireless remote controller

© 2019 Mitsubishi Electric Trane HVAC US LLC. All rights reserved.

ACCESSORIES: SUZ-KA12NAR1

Port Adapter size: 1/2" X 3/8" (required)	□ MAC-A455JP-E
Air Outlet Guide	□ MAC-881SG
Air Outlet Guide	□ MAC-886SG-E
Optional Defrost Heater	□ MAC-640BH-U
Hail Guard	□ HG-B4
Outdoor Unit 3-1/4 inch Mounting Base (Pair) - Plastic	□ DSD-400P
Condensing Unit Mounting Pad 16" x 36" x 3"	□ ULTRILITE1
Outdoor Unit Stand — 12" High	□ QSMS1201M
Outdoor Unit Stand — 18" High	□ QSMS1801M
Outdoor Unit Stand — 24" High	□ QSMS2401M
Heavy Duty Wall Mounting Bracket— Coated Steel	□ QSWB2000M-1
Heavy Duty Wall Mounting Bracket — 316 Series Stainless Steel	□ QSWBSS
15' x 1/4" x 15' / 3/8" Lineset (Twin-Tube Insulation)	□ MLS143812T-15
30' x 1/4" x 30' / 3/8" Lineset (Twin-Tube Insulation)	□ MLS143812T-30
50' x 1/4" x 50' / 3/8" Lineset (Twin-Tube Insulation)	□ MLS143812T-50
65' x 1/4" x 65' / 3/8" Lineset (Twin-Tube Insulation)	□ MLS143812T-65

© 2019 Mitsubishi Electric Trane HVAC US LLC. All rights reserved.

DIMENSIONS: PEAD-A12AA7

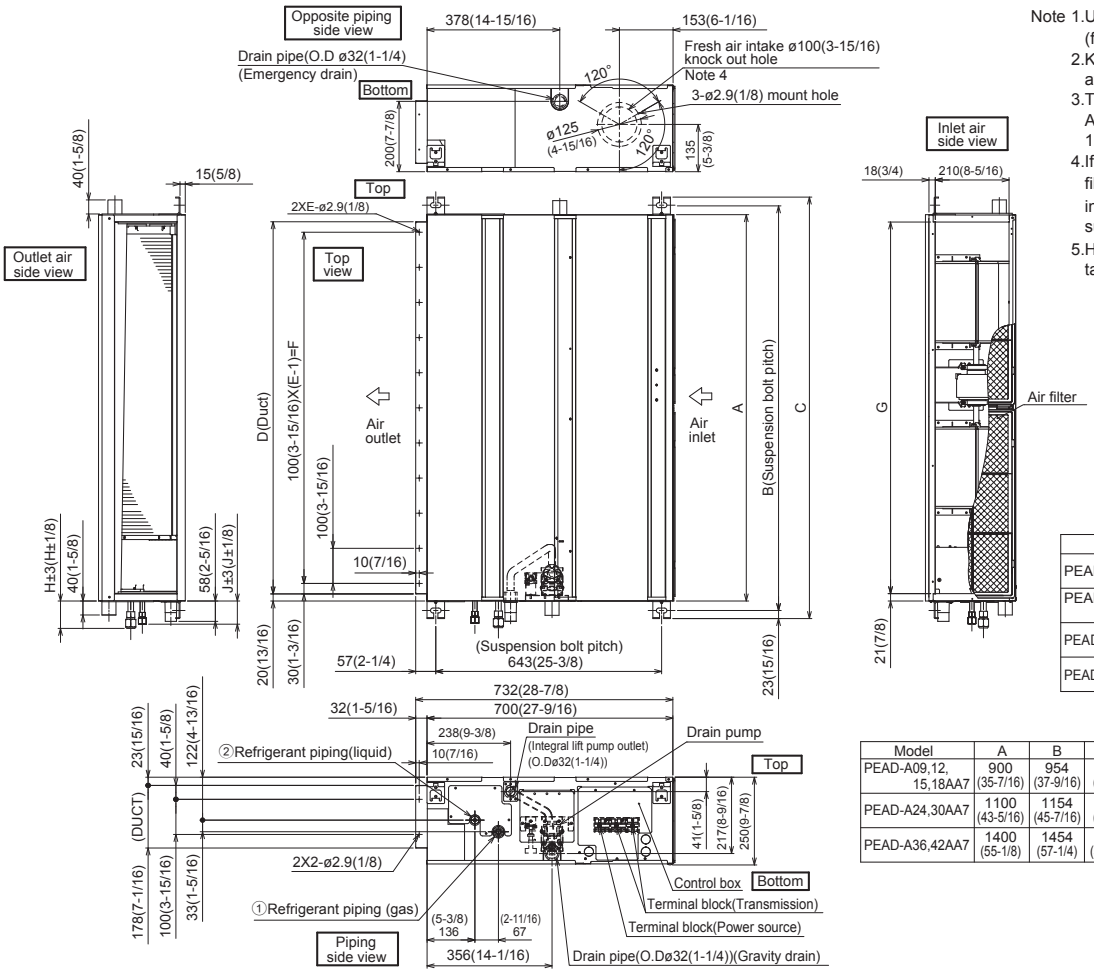

Note 1.Use an M10 screw for the suspension bolt (field supply).
2.Keep the service space for maintenance at the bottom.
3.This drawing is for PEAD-A24·30·36·42 AA7 models,which have 2 fans. PEAD-A09·12·15·18AA7 models have 1 fan.
4.If the inlet duct is used,remove the air filter (supplied with the unit), then install the filter (field supply) at the suction side.
5.Heat air to 0°C (32°F) or higher when taking fresh air with a fresh air intake.

Unit:mm(in.)

Model	J	①Gas pipe	②Liquid pipe
PEAD-A09AA7	62 (2-1/2)	ø9.52 (3/8)	ø6.35 (1/4)
PEAD-A12,15, 18AA7	62 (2-1/2)	ø12.7 (1/2)	ø6.35 (1/4)
PEAD-A24,30AA7	66 (2-5/8)	ø15.88 (5/8)	ø9.52 (3/8)
PEAD-A36,42AA7			

Unit:mm(in.)

Model	A	B	C	D	E	F	G	H
PEAD-A09,12, 15,18AA7	900 (35-7/16)	954 (37-9/16)	1000 (39-3/8)	860 (33-7/8)	9	800 (31-1/2)	858 (33-13/16)	72 (2-7/8)
PEAD-A24,30AA7	1100 (43-5/16)	1154 (45-7/16)	1200 (47-1/4)	1060 (41-3/4)	11	1000 (39-3/8)	1058 (41-11/16)	78 (3-1/8)
PEAD-A36,42AA7	1400 (55-1/8)	1454 (57-1/4)	1500 (59-1/16)	1360 (53-9/16)	14	1300 (51-3/16)	1358 (53-1/2)	

© 2019 Mitsubishi Electric Trane HVAC US LLC. All rights reserved.

DIMENSIONS: SUZ-KA12NAR1

Unit: inch

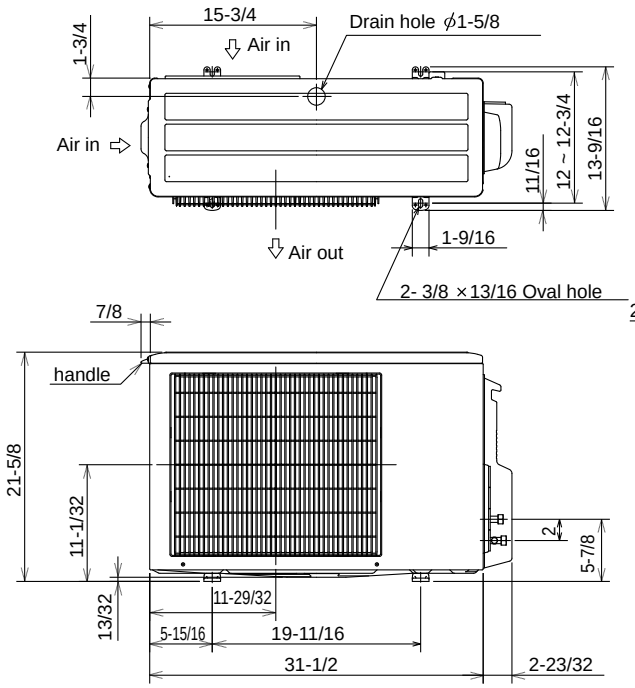

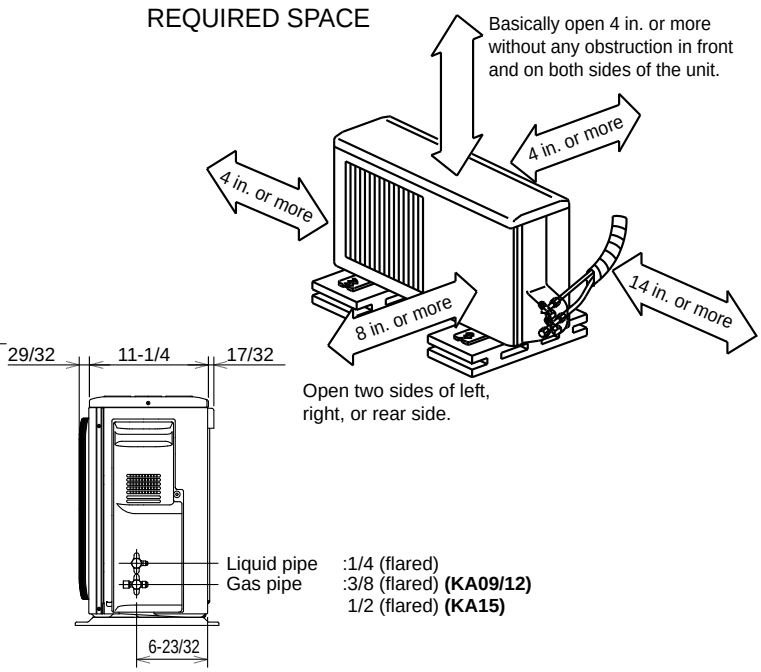

MITSUBISHI ELECTRIC

COOLING & HEATING

1340 Satellite Boulevard, Suwanee, GA 30024
Toll Free: 800-433-4822 www.mehvac.com

FORM# PEAD-A12AA7 / SUZ-KA12NAR1 - 201902Ver2

Specifications are subject to change without notice.

© 2019 Mitsubishi Electric Trane HVAC US LLC. All rights reserved.