M-SERIES

SUBMITTAL DATA: MSZ-GL18NA
18,000 BTU/H WALL-MOUNTED INDOOR UNIT

MITSUBISHI ELECTRIC
HEATING & AIR CONDITIONING

Job Name:	
System Reference:	Date:

Indoor Unit: MSZ-GL18NA	Wireless Remote Controller

GENERAL FEATURES

- Slim wall-mounted indoor units provide zone comfort control
- The outdoor unit powers the indoor unit, and should a power outage occur, the system is automatically restarted when power returns
- Multiple fan speed options: Quiet, Low, Medium, High, Super-high, Auto
- Multiple control options available:
  - Hand-held Remote Controller (provided with unit)
  - kumo cloud® smart device app for remote access
  - Third-party interface options
  - Wired or wireless controllers
- Hot-Start Technology: no cold air rush at equipment startup or when restarting after Defrost Cycle
- Quiet operation
- Smart Set: recalls a preferred preset temperature setting at the touch of a button

Specifications are subject to change without notice.

© 2022 Mitsubishi Electric Trane HVAC US LLC. All rights reserved.

SPECIFICATIONS: MSZ-GL18NA

Cooling Capacity[1, 3]		BTU/H	18,000
Heating Capacity[2, 3]		BTU/H	21,600
Electrical	Voltage, Phase, Frequency		208/230V, 1 phase, 60Hz
	Guaranteed Voltage Range	V AC	187 - 253
	Voltage: Indoor - Outdoor, S1-S2	V AC	208 / 230
	Voltage: Indoor - Outdoor, S2-S3	V DC	24
	Short-circuit Current Rating (SCCR)		5
MCA		A	1
Blower Motor Full Load Amperage		A	0.67
Blower Motor Output		W	30
Airflow Rate at Cooling, Dry		CFM	646-522-417-332-258
Airflow Rate at Cooling, Wet		CFM	581-470-375-299-232
Airflow Rate at Heating, Dry		CFM	646-565-469-385-297
Sound Pressure Level (Cooling)		dB(A)	49-44-38-33-28
Sound Pressure Level (Heating)		dB(A)	48-43-38-33-28
Drain Pipe Size		In. (mm)	5/8 (15.88)
Heat Exchanger Type			Plate fin coil
External Finish Color			Munsell 1.0Y 9.2/0.2
Unit Dimensions		W: In. (mm)	36-5/16 (923)
		D: In. (mm)	9-13/16 (250)
		H: In. (mm)	12 (305)
Package Dimensions		W: In. (mm)	39 (990)
		D: In. (mm)	13 (330)
		H: In. (mm)	15 (380)
Unit Weight		Lbs. (kg)	28 (13)
Package Weight		Lbs. (kg)	33 (15)
Refrigerant	Type		R410A
Piping	Gas Pipe Size O.D. (Flared)	In. (mm)	1/2 (12.7)
	Liquid Pipe Size O.D. (Flared)	In. (mm)	1/4 (6.35)

Notes:

Nominal Conditions	[1]Cooling (Indoor // Outdoor)	°F	80 DB, 67 WB // 95 DB, 75 WB
	[2]Heating at 47°F (Indoor // Outdoor)	°F	70 DB, 60 WB // 47 DB, 43 WB

[3]Capacity varies based on the number of indoor units operating and the model of the Multi-zone Outdoor Unit. For reference to connected capacity charts, please refer Multi-zone Outdoor Unit Operational Performance.

Specifications are subject to change without notice.

© 2022 Mitsubishi Electric Trane HVAC US LLC. All rights reserved.

ACCESSORIES: MSZ-GL18NA

Anti-allergy Enzyme Filter	□ MAC-408FT-E
kumo touch™ RedLINK™ Wireless Controller	□ MHK2
Deluxe MA Remote Controller[1]	□ PAR-40MAAU
Simple MA Controller[1]	□ PAC-YT53CRAU-J
Touch MA Controller[1]	□ PAR-CT01MAU-SB
Wireless Temperature and Humidity Sensor	□ PAC-USWHS003-TH-1
System Control Interface[2]	□ MAC-334IF-E
Wireless Interface 2	□ PAC-USWHS002-WF-2
Thermostat Interface	□ PAC-US444CN-1
kumo station® for kumo cloud®	□ PAC-WHS01HC-E
USNAP Interface	□ PAC-WHS01UP-E
IT Extender	□ PAC-WHS01IE-E
BACnet® and MODBUS® Interface	□ PAC-UKPRC001-CN-1
Lockdown Bracket for Hand-held Remote Controllers	□ RCMKP1CB
Blue Diamond Sensor Extension Cable — 15 Ft.	□ C13-103
Blue Diamond Alarm Extension Cable — 6.5 Ft.	□ C13-192
Blue Diamond MultiTank — collection tank for use with multiple pumps	□ C21-014
Blue Diamond Rubber Foot Pads	□ F10-010
Mini Condensate Pump — 230 volt application	□ SI30-230
MegaBlue Advanced Blue Diamond Condensate Pump w/ Reservoir & Sensor	□ X87-835 - 110 to 250V
MaxiBlue Advanced Blue Diamond Mini Condensate Pump w/ Reservoir & Sensor (110V) up to 48,000 BTU/H[recommended]	□ X87-711 - 110V
Advanced Blue Diamond Mini Condensate Pump w/ Reservoir & Sensor (208/230V) [recommended]	□ X87-721 - 208/230V
MicroBlue Blue Diamond Mini Condensate Pump (110/208/230V) up to 18,000 BTU/H	□ X85-003
Fascia Kit for MicroBlue Pump – mounts the MicroBlue and sensor directly beneath the indoor unit	□ T18-016
Drain Pan Level Sensor	□ SS610E
(30A/600V/UL) [fits 2" X 4" utility box] - Black	□ TAZ-MS303
(30A/600V/UL) [fits 2" X 4" utility box] - White	□ TAZ-MS303W

[1] Requires MAC-334IF-E

[2] Allows indoor units to connect to an MA Controller

Specifications are subject to change without notice.

© 2022 Mitsubishi Electric Trane HVAC US LLC. All rights reserved.

DIMENSIONS: MSZ-GL18NA

Unit: inch

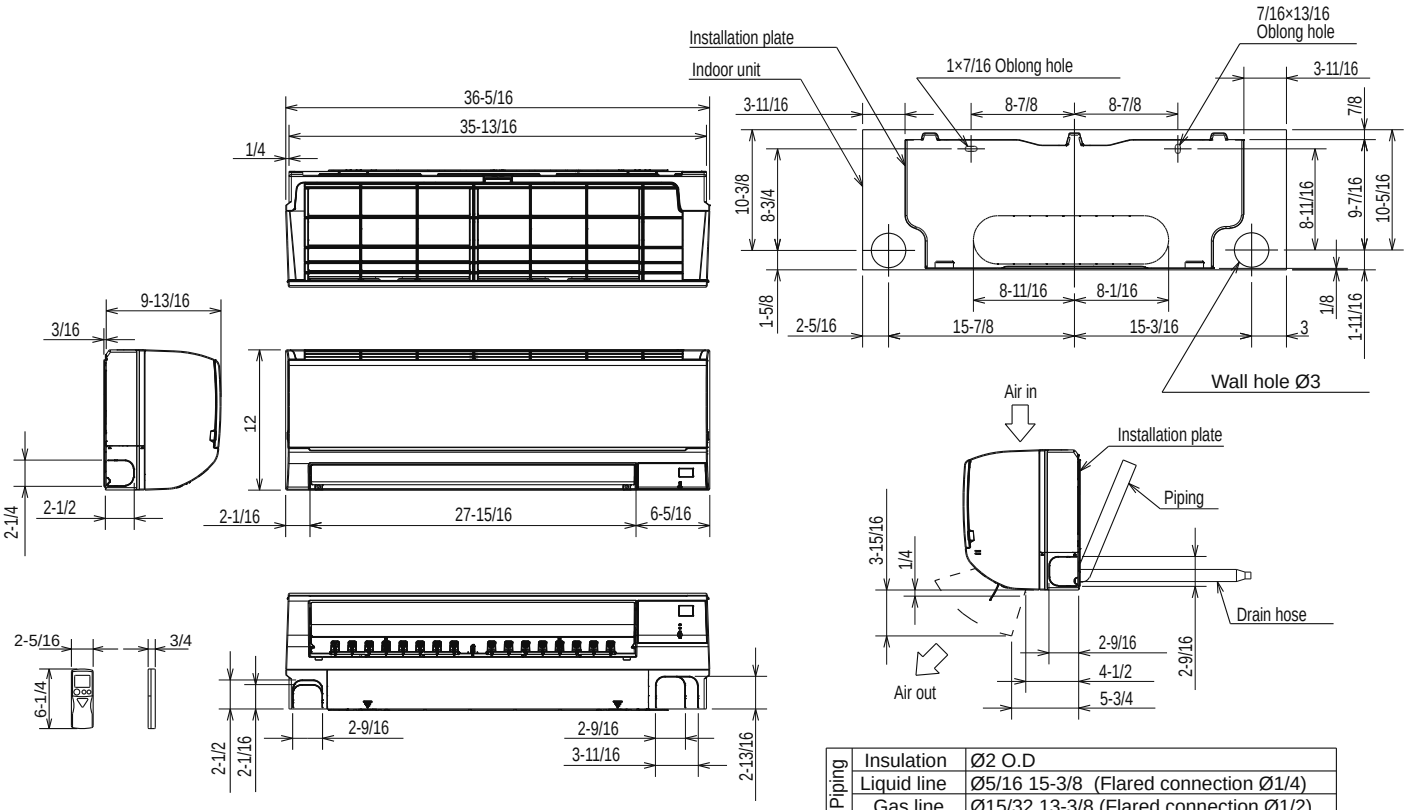

Piping	Insulation	Ø2 O.D
	Liquid line	Ø5/16 15-3/8 (Flared connection Ø1/4)
	Gas line	Ø15/32 13-3/8 (Flared connection Ø1/2)
Drain hose		Insulation Ø1-1/8 Connected part Ø5/8 O.D

1340 Satellite Boulevard, Suwanee, GA 30024
Toll Free: 800-433-4822 www.mehvac.com

Specifications are subject to change without notice.

© 2022 Mitsubishi Electric Trane HVAC US LLC. All rights reserved.