American Standard
HEATING & AIR CONDITIONING

MITSUBISHI ELECTRIC

Nv-SERIES

SUBMITTAL DATA: NAXUKS18A112A* & NAXSKH18A112A*

18,000 BTU/H EZ FIT® RECESSED CASSETTE HEAT PUMP SYSTEMS

Job Name:	
System Reference:	Date:

Indoor Unit: NTXUKS18A112A*	Outdoor Unit: NAXSKH18A112A*	Wireless Remote Controller

INDOOR UNIT FEATURES

- Fits between 16” joists spacing
- Stylish, square design panel
- Built-in condensate lift mechanism (19.6”)
- Serviceable from the bottom (electrical and flare connections)
- Adjustable fan speeds and vane directions
- Washable antibacterial and deodorizing filter
- Multiple control options available:
  - Hand-held Remote Controller (provided with unit)
  - kumo cloud® smart device app for remote access
  - Third-party interface options
  - Wired or wireless controllers
- Pocket inside the access panel for kumo cloud® Wireless Interface

OUTDOOR UNIT FEATURES

- The outdoor unit powers the indoor unit, and should a power outage occur, the system is automatically restarted when power returns
- INVERTER-driven compressor and LEV provide high efficiency and comfort while using only the energy needed to maintain maximum performance
- Pro-Heat performance offers 100% heating capacity at 5°F
- Hot-Start Technology: no cold air rush at equipment startup or when restarting after Defrost Cycle
- Quiet operation
- Blue Fin anti-corrosion treatment applied to the outdoor unit heat exchanger for increased coil protection and longer life
- Built-in base pan heater
- Innovative Joint Lap DC Motor leads to high efficiency and reliability
- Pulse Amplitude Modulation technology

Specifications are subject to change without notice.

© 2020 Mitsubishi Electric Trane HVAC US LLC. All rights reserved.

SPECIFICATIONS: NAXUKS18A112A* & NAXSKH18A112A*

Cooling at 95°F[1]	Maximum Capacity	BTU/H	16,700
	Rated Capacity	BTU/H	16,700
	Minimum Capacity	BTU/H	8,740
	Maximum Power Input	W	1,335
	Rated Power Input	W	1,335
	Moisture Removal	Pints/h	5.10
	Sensible Heat Factor		0.66
	Power Factor (208/230V)	%	98
Heating at 47°F[2]	Maximum Capacity	BTU/H	22,000
	Rated Capacity	BTU/H	18,600
	Minimum Capacity	BTU/H	8,500
	Maximum Power Input	W	2,700
	Rated Power Input	W	1,780
	Power Factor	%	98
Heating at 17°F[3]	Maximum Capacity	BTU/H	18,600
	Rated Capacity	BTU/H	11,800
	Maximum Power Input	W	2,260
	Rated Power Input	W	1,430
Heating at 5°F[4]	Maximum Capacity	BTU/H	18,600
	Maximum Power Input	W	3,900
Efficiency	SEER		18.80
	EER[1]		12.50
	HSPF (IV)		10.00
	COP at 47°F[2]		3.00
	COP at 17°F in Maximum Capacity[3]		2.81
	COP at 5°F in Maximum Capacity[4]		1.39
	ENERGY STAR® certified units (ENERGY STAR products are third-party certified by an EPA-recognized Certification Body.)		Yes
Electrical	Voltage, Phase, Frequency		208/230V, 1 phase, 60Hz
	Guaranteed Voltage Range	V AC	187-253
	Voltage: Indoor - Outdoor, S1-S2	V AC	208/230
	Voltage: Indoor - Outdoor, S2-S3	V DC	24
	Short-circuit Current Rating (SCCR)	kA	5
	Recommended Fuse/Breaker Size (Outdoor)	A	20
	Recommended Wire Size (Indoor - Outdoor)	AWG	14
Indoor Unit	MCA	A	1
	Fan Motor Full Load Amperage	A	0.76
	Fan Motor Output	W	30
	Airflow Rate at Cooling, Dry	CFM	403-346-293-212
	Airflow Rate at Cooling, Wet	CFM	343-294-249-180
	Airflow Rate at Heating, Dry	CFM	417-364-311-212
	Sound Pressure Level (Cooling)	dB(A)	47-41-36-29
	Sound Pressure Level (Heating)	dB(A)	48-42-37-26
	Drain Pipe Size	In. (mm)	1-1/4 (32)
	Condensate Lift Mechanism, Maximum Distance	In. (mm)	19-11/16 (500)
	Heat Exchanger Type		Plate fin coil

Specifications are subject to change without notice.

© 2020 Mitsubishi Electric Trane HVAC US LLC. All rights reserved.

SPECIFICATIONS: NAXUKS18A112A* & NAXSKH18A112A*

	External Finish Color		White
	Unit Dimensions	W: In. (mm)	43-3/8 (1,102)
		D: In. (mm)	14-3/16 (360)
		H: In. (mm)	7-5/16 (185)
	Package Dimensions	W: In. (mm)	46-5/16 (1,180)
		D: In. (mm)	15-3/4 (400)
		H: In. (mm)	11 (280)
	Unit Weight	Lbs. (kg)	34 (15.5)
	Package Weight	Lbs. (kg)	41 (18)
Indoor Unit Operating Temperature Range	Cooling Intake Air Temp (Maximum / Minimum)*	°F	90F D.B / 73F W.B // 67F D.B / 57F W.B
	Heating Intake Air Temp (Maximum / Minimum)	°F	80F D.B // 70F D.B
Outdoor Unit	MCA	A	17.0
	MOCP	A	31.0
	Fan Motor Full Load Amperage	A	1.0
	Fan Motor Output	W	60.0
	Airflow Rate	CFM	2,020 / 1,930
	Refrigerant Control		LEV
	Defrost Method		Reverse Cycle
	Heat Exchanger Type		Plate Fin Coil
	Blue Fin Coating on Heat Exchanger		Yes
	Sound Pressure Level, Cooling[1]	dB(A)	55
	Sound Pressure Level, Heating[2]	dB(A)	55
	Compressor Type		DC INVERTER-driven Twin Rotary
	Compressor Model		SNB220FQGMT
	Compressor Rated Load Amps	A	16
	Compressor Locked Rotor Amps	A	13
	Compressor Oil Type // Charge	oz.	FV50S // 23.7
	External Finish Color		Ivory Munsell 3Y 7.8/1.1
	Base Pan Heater		Yes
	Unit Dimensions	W: In. (mm)	38-9/16 (840)
		D: In. (mm)	13 (330)
		H: In. (mm)	34-5/8 (880)
	Package Dimensions	W: In. (mm)	38-9/16 (980)
		D: In. (mm)	16-9/16 (420)
		H: In. (mm)	39 (990)
	Unit Weight	Lbs. (kg)	131 (59.5)
	Package Weight	Lbs. (kg)	150 (68)
Outdoor Unit Operating Temperature Range	Cooling Air Temp (Maximum / Minimum)*	°F	115 / 14
	Cooling Thermal Lock-out / Re-start Temperatures**	°F	1 / 5
	Heating Air Temp (Maximum / Minimum)	°F	75 / -13
	Heating Thermal Lock-out / Re-start Temperatures**	°F	-18 / -14
Refrigerant	Type		R410A
	Charge	Lbs, oz	3, 12
Piping	Gas Pipe Size O.D. (Flared)	In.(mm)	1/2 (12.7)
	Liquid Pipe Size O.D. (Flared)	In.(mm)	1/4 (6.35)
	Maximum Piping Length	Ft. (m)	65

Specifications are subject to change without notice.

© 2020 Mitsubishi Electric Trane HVAC US LLC. All rights reserved.

SPECIFICATIONS: NAXUKS18A112A* & NAXSKH18A112A*

	Maximum Height Difference	Ft. (m)	40
	Maximum Number of Bends		10

Notes

AHRI Rated Conditions (Rated data is determined at a fixed compressor speed)	[1]Cooling (Indoor // Outdoor)	°F	80 DB, 67 WB // 95 DB, 75 WB
	[2]Heating at 47°F (Indoor // Outdoor)	°F	70 DB, 60 WB // 47 DB, 43 WB
	[3]Heating at 17°F (Indoor // Outdoor)	°F	70 DB, 60 WB // 17 DB, 15 WB
Conditions	[4]Heating at 5°F (Indoor // Outdoor)	°F	70 DB, 60 WB // 5 DB, 4 WB
*Applications should be restricted to comfort cooling only; equipment cooling applications are not recommended for low ambient temperature conditions. **System cuts out in heating mode to avoid thermistor error and automatically restarts at these temperatures.			

Specifications are subject to change without notice.

© 2020 Mitsubishi Electric Trane HVAC US LLC. All rights reserved.

ACCESSORIES: NAXUKS18A112A*

Grille (required)	■ ALP-444W
Anti-allergy Enzyme Filter	□ MAC-408FT-E
kumo touch™ RedLINK™ Wireless Controller	□ MHK2
Deluxe MA Remote Controller[1]	□ AAR-40MAAU
Simple MA Controller[1]	□ PAC-YT53CRAU-J
Touch MA Controller[1]	□ PAR-CT01MAU-SB
Wired Remote Sensor	□ M21EAA307
Wireless Temperature and Humidity Sensor	□ PAC-USWHS003-TH-1
System Control Interface[2]	□ MAC-334IF-E
External Fan / Heater Control Relay Adapter	□ CN24RELAY-KIT-CM3
Wireless Interface 2	□ PAC-USWHS002-WF-2
Thermostat Interface	□ PAC-US444CN-1
kumo station®	□ TAC-WHS01HC-E
USNAP Interface	□ PAC-WHS01UP-E
IT Extender	□ PAC-WHS01IE-E
BACnet® and MODBUS® Interface	□ PAC-UKPRC001-CN-1
External Fan / Heater Control Relay Adapter	□ CN24RELAY-KIT-CM3
Lockdown Bracket for Hand-held Remote Controllers	□ RCMKP1CB
Advanced Blue Diamond Mini Condensate Pump w/ Reservoir & Sensor (208/230V) [recommended]	□ X87-721 - 208/230V
MicroBlue Blue Diamond Mini Condensate Pump (110/208/230V) up to 18,000 BTU/H	□ X85-003
(30A/600V/UL) [fits 2" X 4" utility box] - Black	□ TAZ-MS303
(30A/600V/UL) [fits 2" X 4" utility box] - White	□ TAZ-MS303W

[1] Requires MAC-334IF-E

[2] Allows indoor units to connect to an MA Controller

© 2020 Mitsubishi Electric Trane HVAC US LLC. All rights reserved.

ACCESSORIES: NAXSKH18A112A*

Air Outlet Guide	□ PAC-ADG886AA-E
Optional Defrost Heater	□ MAC-642BH-U1
Hail Guard	□ HG-A7
Outdoor Unit 3-1/4 inch Mounting Base (Pair) - Plastic	□ DSD-400P
Condensing Unit Mounting Pad 16" x 36" x 3"	□ ULTRILITE1
Outdoor Unit Stand — 12" High	□ QSMS1201M
Outdoor Unit Stand — 18" High	□ QSMS1801M
Outdoor Unit Stand — 24" High	□ QSMS2401M
Heavy Duty Wall Mounting Bracket— Coated Steel	□ QSWB2000M-1
Heavy Duty Wall Mounting Bracket — 316 Series Stainless Steel	□ QSWBSS
15' x 1/4" x 15' / 1/2" Lineset (Twin-Tube Insulation)	□ MLS141212T-15
30' x 1/4" x 30' / 1/2" Lineset (Twin-Tube Insulation)	□ MLS141212T-30
50' x 1/4" x 50' / 1/2" Lineset (Twin-Tube Insulation)	□ MLS141212T-50
65' x 1/4" x 65' / 1/2" Lineset (Twin-Tube Insulation)	□ MLS141212T-65
100' x 1/4" x 100' / 1/2" Lineset (Twin-Tube Insulation)	□ MLS141212T-100
10' x 3/8" x 10' x 5/8" Lineset (Twin-Tube Insulation)	□ MPLS385812T-10

Specifications are subject to change without notice.

© 2020 Mitsubishi Electric Trane HVAC US LLC. All rights reserved.

DIMENSIONS: NAXUKS18A112A*

Unit: inch

INDOOR UNIT OUTLINE DRAWING

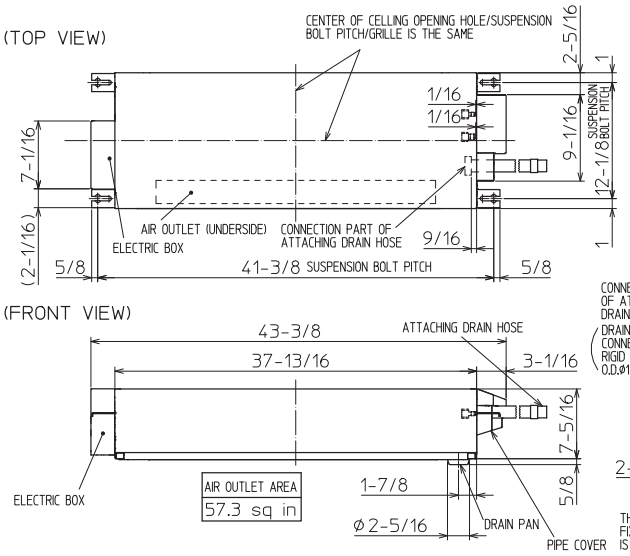

REMOTE CONTROLLER OUTLINE DRAWING

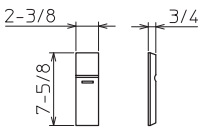

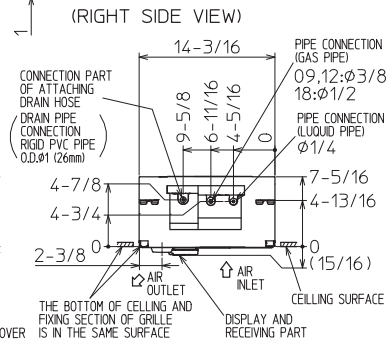

THE METHOD FOR STANDING DRAIN FROM INDOOR UNIT
※ CUT THE DRAIN HOSE (ACCESSORY) FOR USE, IF NECESSARY.

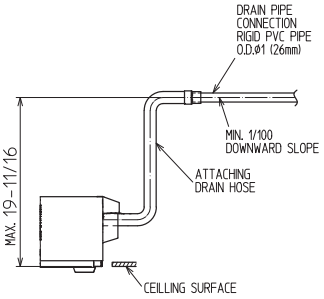

GRILLE OUTLINE DRAWING
(MLP-444W)

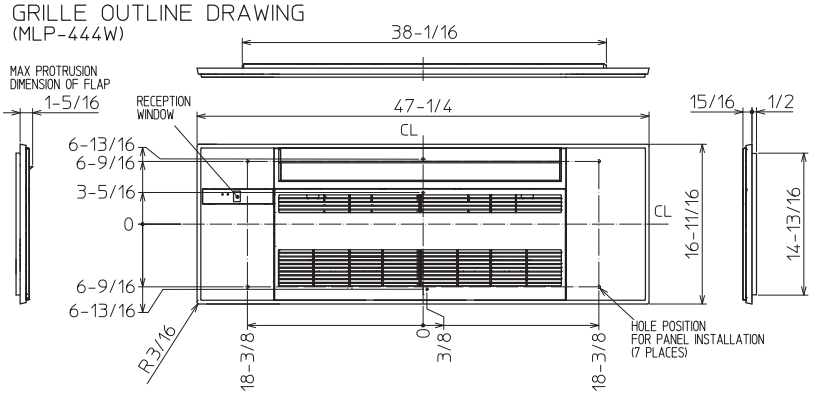

		09/12 KBTU/H	18 KBTU/H
EXTENSION PIPE	LIQUID PIPE O.D.	ø1/4	
	GAS PIPE O.D.	ø3/8	ø1/2
CONNECTIONG OF PIPE	LIQUID PIPE	FLARED CONNECTION ø1/4	
	GAS PIPE	FLARED CONNECTION ø3/8	FLARED CONNECTION ø1/2
DRAIN HOSE		HEAT INSULATER O.D. ø1-1/4 / CONNECTION I.D. ø1 / EFFECTIVE LENGTH 18-7/8	
DRAIN PIPE CONNECTION		RIGID PVC PIPE O.D. ø1 (26mm)	

NOTE1. CUT THE DRAIN HOSE (ACCESSORY) FOR USE, IF NECESSARY.

INDOOR UNIT DETAIL VIEW
(TOP VIEW)

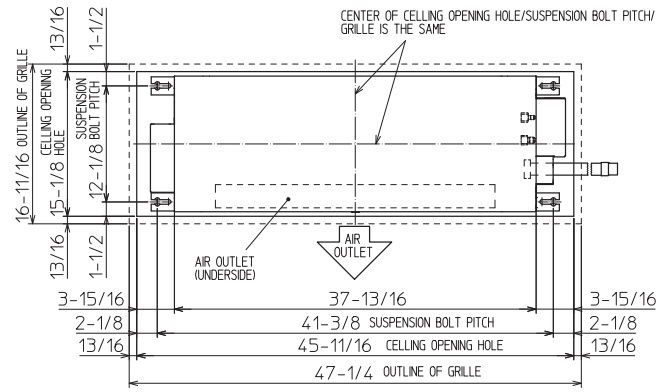

(FRONT VIEW)

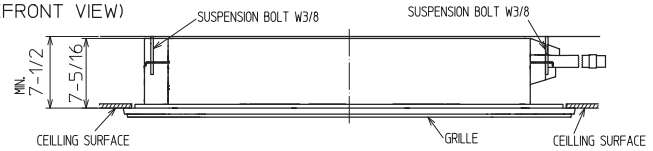

© 2020 Mitsubishi Electric Trane HVAC US LLC. All rights reserved.

DIMENSIONS: NAXSKH18A112A*

Unit: inch

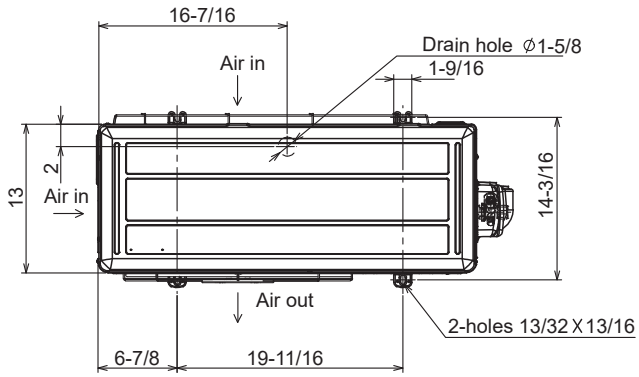

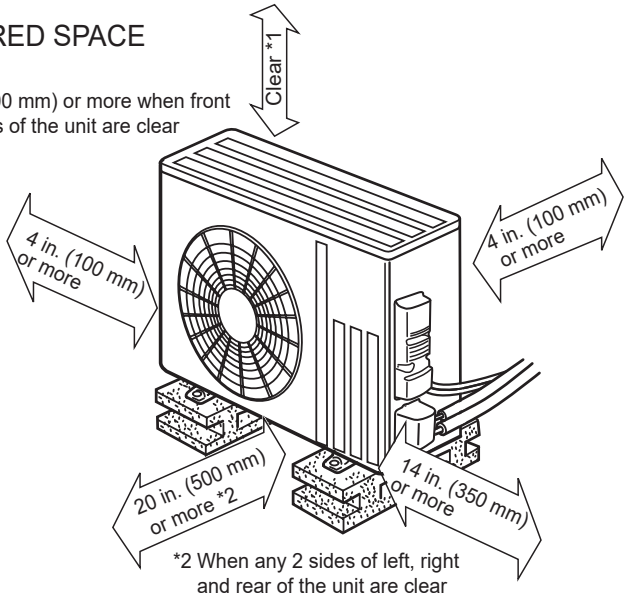

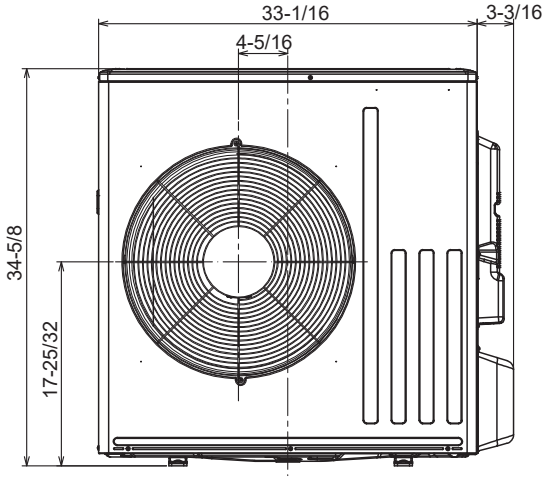

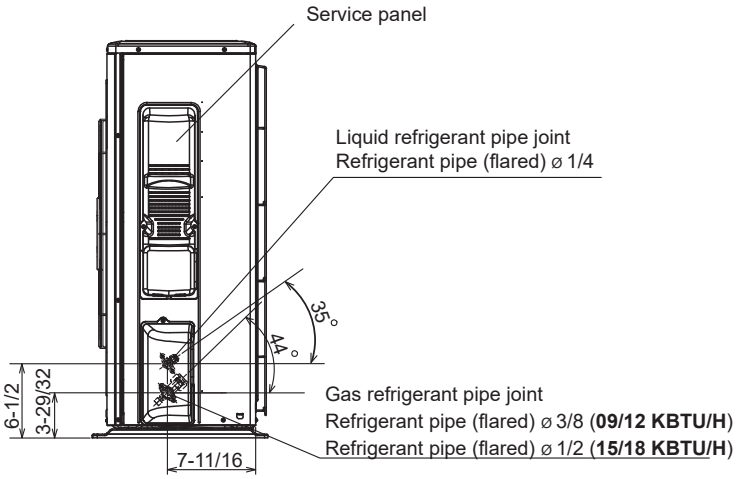

FORM# NAXUKS18A112A* / NAXSKH18A112A* - 202008

Specifications are subject to change without notice.

© 2020 Mitsubishi Electric Trane HVAC US LLC. All rights reserved.