American Standard
HEATING & AIR CONDITIONING

MITSUBISHI ELECTRIC

Nv-SERIES

SUBMITTAL DATA: NAXDKS09A112A* & NAXSKH09A112A*

9,000 BTU/H HORIZONTAL LOW STATIC DUCTED HEAT PUMP SYSTEMS

Job Name:	
System Reference:	Date:

Indoor Unit: NAXDKS09A112A*	Outdoor Unit: NAXSKH09A112A*
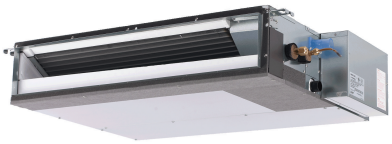	

INDOOR UNIT FEATURES

- Concealed horizontal-ducted unit for applications with short duct runs
- Quiet operation
- Ultra-thin body: 7-7/8" high
- Built-in condensate lift mechanism (lifts to 21-21/32")
- Multiple control options available:
  - kumo cloud® smart device app for remote access
  - Third-party interface options
  - Wired or wireless controllers
- Static capability up to 0.20 in. WG

OUTDOOR UNIT FEATURES

- The outdoor unit powers the indoor unit, and should a power outage occur, the system is automatically restarted when power returns
- INVERTER-driven compressor and LEV provide high efficiency and comfort while using only the energy needed to maintain maximum performance
- Pro-Heat performance offers 100% heating capacity at 5°F
- Hot-Start Technology: no cold air rush at equipment startup or when restarting after Defrost Cycle
- Quiet operation
- Blue Fin anti-corrosion treatment applied to the outdoor unit heat exchanger for increased coil protection and longer life
- Built-in base pan heater
- Innovative Joint Lap DC Motor leads to high efficiency and reliability
- Pulse Amplitude Modulation technology

Specifications are subject to change without notice.

© 2021 Mitsubishi Electric Trane HVAC US LLC. All rights reserved.

SPECIFICATIONS: NAXDKS09A112A* & NAXSKH09A112A*

Cooling at 95°F[1]	Maximum Capacity	BTU/H	9,000
	Rated Capacity	BTU/H	9,000
	Minimum Capacity	BTU/H	4,500
	Maximum Power Input	W	690
	Rated Power Input	W	690
	Moisture Removal	Pints/h	1.70
	Sensible Heat Factor		0.79
	Power Factor (208/230V)	%	89
Heating at 47°F[2]	Maximum Capacity	BTU/H	13,300
	Rated Capacity	BTU/H	12,500
	Minimum Capacity	BTU/H	8,100
	Maximum Power Input	W	1,300
	Rated Power Input	W	1,300
	Power Factor	%	95
Heating at 17°F[3]	Maximum Capacity	BTU/H	12,500
	Rated Capacity	BTU/H	8,700
	Maximum Power Input	W	1,670
	Rated Power Input	W	1,120
Heating at 5°F[4]	Maximum Capacity	BTU/H	12,500
	Maximum Power Input	W	2,000
Efficiency	SEER		17.30
	EER[1]		13.00
	HSPF (IV)		9.80
	COP at 47° F[2]		2.80
	COP at 17°F in Maximum Capacity[3]		2.20
	COP at 5°F in Maximum Capacity[4]		1.59
	ENERGY STAR® certified units (ENERGY STAR products are third-party certified by an EPA-recognized Certification Body.)		Yes
Electrical	Voltage, Phase, Frequency		208/230V, 1 phase, 60Hz
	Guaranteed Voltage Range	V AC	187-253
	Voltage: Indoor - Outdoor, S1-S2	V AC	208/230
	Voltage: Indoor - Outdoor, S2-S3	V DC	24
	Short-circuit Current Rating (SCCR)	kA	5
	Recommended Fuse/Breaker Size (Outdoor)	A	15
	Recommended Wire Size (Indoor - Outdoor)	AWG	14
Indoor Unit	MCA	A	0.74
	Fan Motor Full Load Amperage	A	0.59
	Fan Motor Output	W	96
	Airflow Rate, Dry	CFM	317-247-194
	Airflow Rate, Wet	CFM	285-222-174
	Sound Pressure Level (Cooling)	dB(A)	30-26-23
	Sound Pressure Level (Heating)	dB(A)	30-26-23
	External Static Pressure	in.WG	0.02-0.06-0.14-0.2
	Drain Pipe Size	In. (mm)	1-1/4 (32)
	Condensate Lift Mechanism, Maximum Distance	In. (mm)	21-21/32 (550)
	Heat Exchanger Type		Plate fin coil
	External Finish Color		Galvanized
	Unit Dimensions	W: In. (mm)	31 1/8 (790)
		D: In. (mm)	27-9/16 (700)
		H: In. (mm)	7-7/8 (200)
	Package Dimensions	W: In. (mm)	39-3/8 (1,000)
		D: In. (mm)	35-7/16 (900)
		H: In. (mm)	14-3/16 (360)
	Unit Weight	Lbs. (kg)	42 (19)
	Package Weight	Lbs. (kg)	64 (29)
Indoor Unit Operating Temperature Range	Cooling Intake Air Temp (Maximum / Minimum)*	°F	90 DB / 72 WB // 68 DB / 61 WB
	Heating Intake Air Temp (Maximum / Minimum)	°F	77 DB // 59 DB
Outdoor Unit	MCA	A	14.0
	MOCP	A	24.0

Specifications are subject to change without notice.

© 2021 Mitsubishi Electric Trane HVAC US LLC. All rights reserved.

SPECIFICATIONS: NAXDKS09A112A* & NAXSKH09A112A*

	Fan Motor Full Load Amperage	A	0.7
	Fan Motor Output	W	77.0
	Airflow Rate	CFM	1,691 / 1,691
	Refrigerant Control		LEV
	Defrost Method		Reverse Cycle
	Heat Exchanger Type		Plate Fin Coil
	Blue Fin Coating on Heat Exchanger		Yes
	Sound Pressure Level (Cooling)[1]	dB(A)	54
	Sound Pressure Level, Heating[2]	dB(A)	55
	Compressor Type		DC INVERTER-driven Twin Rotary
	Compressor Model		SNB130FHBM2T
	Compressor Rated Load Amps	A	13
	Compressor Locked Rotor Amps	A	10
	Compressor Oil Type // Charge	oz.	FV50S // 22
	External Finish Color		Ivory Munsell 3Y 7.8/1.1
	Base Pan Heater		Yes
	Unit Dimensions	W: In. (mm)	38-9/16 (840)
		D: In. (mm)	13 (330)
		H: In. (mm)	34-5/8 (880)
	Package Dimensions	W: In. (mm)	38-9/16 (980)
		D: In. (mm)	16-9/16 (420)
		H: In. (mm)	39 (990)
	Unit Weight	Lbs. (kg)	129 (58.5)
	Package Weight	Lbs. (kg)	148 (67)
Outdoor Unit Operating Temperature Range	Cooling Air Temp (Maximum / Minimum)*	°F	115 / 14
	Cooling Thermal Lock-out / Re-start Temperatures**	°F	-1 / 3
	Heating Air Temp (Maximum / Minimum)	°F	75 / -13
	Heating Thermal Lock-out / Re-start Temperatures**	°F	-18 / -14
Refrigerant	Type		R410A
	Charge	Lbs, oz	3, 9
Piping	Gas Pipe Size O.D. (Flared)	In.(mm)	3/8 (9.52)
	Liquid Pipe Size O.D. (Flared)	In.(mm)	1/4 (6.35)
	Maximum Piping Length	Ft. (m)	65
	Maximum Height Difference	Ft. (m)	40
	Maximum Number of Bends		10

Notes

AHRI Rated Conditions (Rated data is determined at a fixed compressor speed)	[1]Cooling (Indoor // Outdoor)	°F	80 DB, 67 WB // 95 DB, 75 WB
	[2]Heating at 47°F (Indoor // Outdoor)	°F	70 DB, 60 WB // 47 DB, 43 WB
	[3]Heating at 17°F (Indoor // Outdoor)	°F	70 DB, 60 WB // 17 DB, 15 WB
Conditions	[4]Heating at 5°F (Indoor // Outdoor)	°F	70 DB, 60 WB // 5 DB, 4 WB

*Applications should be restricted to comfort cooling only; equipment cooling applications are not recommended for low ambient temperature conditions.
**System cuts out in heating mode to avoid thermistor error and automatically restarts at these temperatures.

Specifications are subject to change without notice.

© 2021 Mitsubishi Electric Trane HVAC US LLC. All rights reserved.

ACCESSORIES: NAXDKS09A112A*

Filter Box with MERV 8 Filters	□ FBL1-1
Wireless Signal Receiver	□ TAR-SA9CA-E
Wireless Signal Receiver	□ PAR-SR32MA-W
Wireless Remote Controller	□ PAR-FL32MA-E
kumo touch™ RedLINK™ Wireless Controller	□ MHK2
Deluxe MA Remote Controller	□ AAR-40MAAU
Simple MA Controller	□ PAC-YT53CRAU-J
Touch MA Controller	□ PAR-CT01MAU-SB
Wired Remote Sensor	□ PAC-SE41TS-E
Wireless Temperature and Humidity Sensor	□ PAC-USWHS003-TH-1
Flush Mount Remote Temperature Sensor	□ PAC-USSEN001-FM-1
System Control Interface	□ MAC-334IF-E
Wireless Interface 2	□ PAC-USWHS002-WF-2
Thermostat Interface	□ PAC-US444CN-1
kumo station®	□ TAC-WHS01HC-E
USNAP Interface	□ PAC-WHS01UP-E
IT Extender	□ PAC-WHS01IE-E
BACnet® and MODBUS® Interface	□ PAC-UKPRC001-CN-1
External Fan / Heater Control Relay Adapter	□ CN24RELAY-KIT-CM3
Wire for Remote on/off with CN32 connector	□ PAC-715AD
Connector and wire for Operation status/error using CN51	□ PAC-725AD
Connector cable for remote display	□ PAC-SA88HA-EP
Wire for Remote on/off with CN32 connector	□ PAC-715AD
Remote Operation Adapter[1]	□ PAC-SF40RM-E
Bottom Return Plate (Converts low-profile ducted indoor unit from rear return to bottom return)	□ BRP-1
External Drain Pump	□ PAC-KE07DM-E
Blue Diamond Sensor Extension Cable — 15 Ft.	□ C13-103
Blue Diamond Alarm Extension Cable — 6.5 Ft.	□ C13-192
Blue Diamond MultiTank — collection tank for use with multiple pumps	□ C21-014
Blue Diamond Rubber Foot Pads	□ F10-010
Mini Condensate Pump — 230 volt application	□ SI30-230
Advanced Blue Diamond Mini Condensate Pump w/ Reservoir & Sensor (208/230V) [recommended]	□ X87-721 - 208/230V
(30A/600V/UL) [fits 2" X 4" utility box] - Black	□ TAZ-MS303
(30A/600V/UL) [fits 2" X 4" utility box] - White	□ TAZ-MS303W

[1] Unable to use with wireless remote controller

© 2021 Mitsubishi Electric Trane HVAC US LLC. All rights reserved.

ACCESSORIES: NAXSKH09A112A*

Air Outlet Guide	□ PAC-ADG881AA-E
Optional Defrost Heater	□ MAC-640BH-U
Hail Guard	□ HG-A7
Outdoor Unit 3-1/4 inch Mounting Base (Pair) - Plastic	□ DSD-400P
Condensing Unit Mounting Pad 16" x 36" x 3"	□ ULTRILITE1
Outdoor Unit Stand — 12" High	□ QSMS1201M
Outdoor Unit Stand — 18" High	□ QSMS1801M
Outdoor Unit Stand — 24" High	□ QSMS2401M
Heavy Duty Wall Mounting Bracket— Coated Steel	□ QSWB2000M-1
Heavy Duty Wall Mounting Bracket — 316 Series Stainless Steel	□ QSWBSS
15' x 1/4" x 15' / 3/8" Lineset (Twin-Tube Insulation)	□ MLS143812T-15
30' x 1/4" x 30' / 3/8" Lineset (Twin-Tube Insulation)	□ MLS143812T-30
50' x 1/4" x 50' / 3/8" Lineset (Twin-Tube Insulation)	□ MLS143812T-50
65' x 1/4" x 65' / 3/8" Lineset (Twin-Tube Insulation)	□ MLS143812T-65

© 2021 Mitsubishi Electric Trane HVAC US LLC. All rights reserved.

DIMENSIONS: NAXDKS09A112A*

Unit: mm (inch)

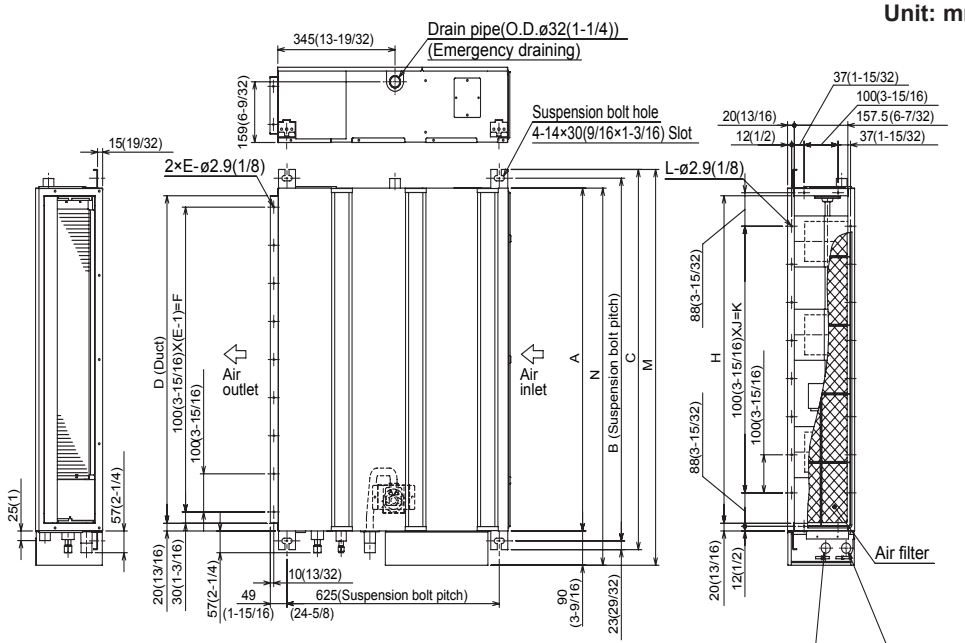

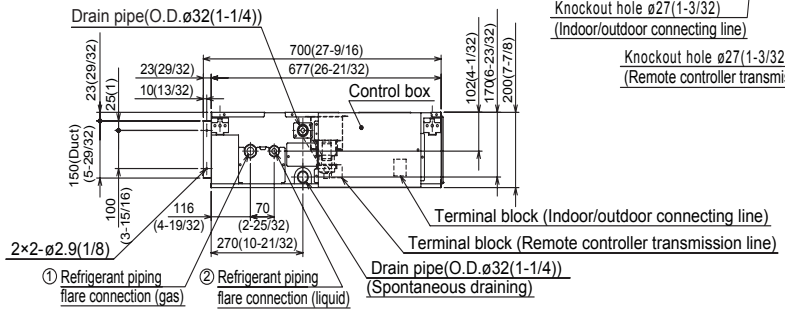

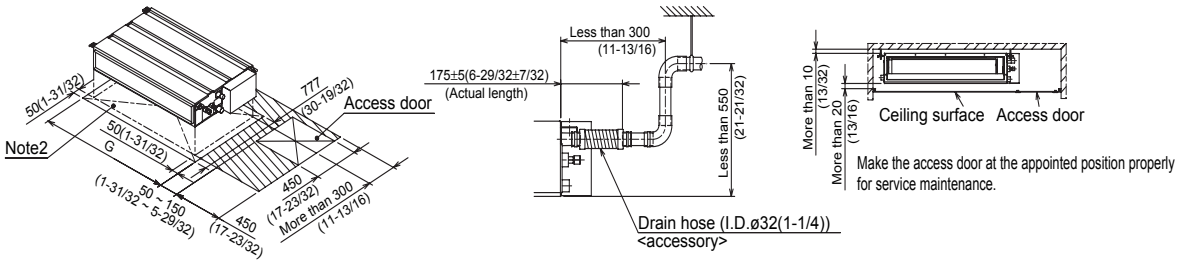

Required space for service and maintenance

mm (in.)

Sizes	A	B	C	D	E	F	G	H	J	K	L	M	N	① Gas pipe	②Liquid pipe
09 KBTU/H	700 (27-9/16)	752 (29-5/8)	798 (31-7/16)	660 (26)	7	600 (23-5/8)	800 (31-1/2)	660 (26)	5	500 (19-11/16)	16	839 (33-1/16)	790 (31-1/8)	ø9.52(3/8)	ø6.35(1/4)
12 KBTU/H	900 (35-7/16)	952 (37-1/2)	998 (39-5/16)	860 (33-7/8)	9	800 (31-1/2)	1000 (39-3/8)	860 (33-7/8)	7	700 (27-9/16)	20	1039 (40-29/32)	990 (39)		
15 KBTU/H														ø12.7(1/2)	
18 KBTU/H	1100 (43-5/16)	1152 (45-3/8)	1198 (47-3/16)	1060 (41-3/4)	11	1000 (39-3/8)	1200 (47-1/4)	1060 (41-3/4)	9	900 (35-7/16)	24	1239 (48-25/32)	1190 (46-7/8)		

Note1. Use M10 screw for the suspension bolt (field supply).
2. Keep the service space for the maintenance at the bottom.
3. This chart indicates for size 15 kBtu/h model, which has 3 fans.
Sizes 09,12 kBtu/h models have 2 fans.
Sizes 08 kBtu/h model has 4 fans.
4. When an inlet duct is used, remove the air filter (supply with the unit), then install the filter (field supply) at suction side.

© 2021 Mitsubishi Electric Trane HVAC US LLC. All rights reserved.

DIMENSIONS: NAXSKH09A112A*

Unit: inch

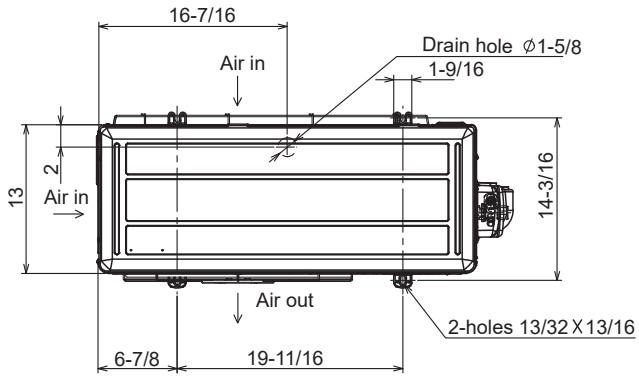

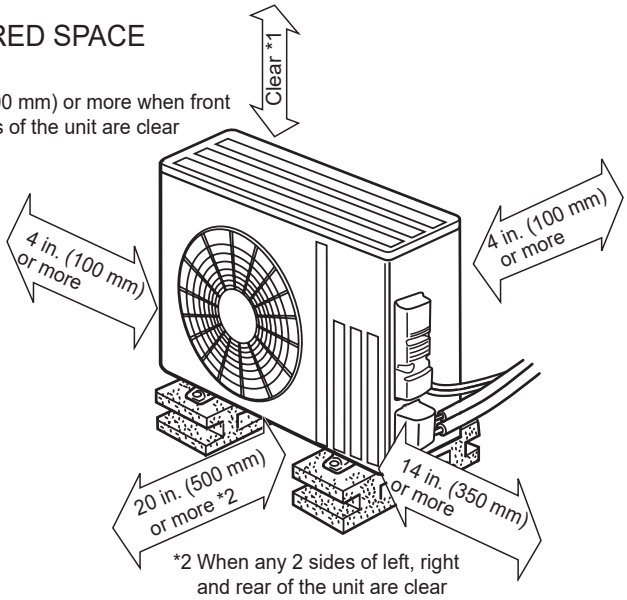

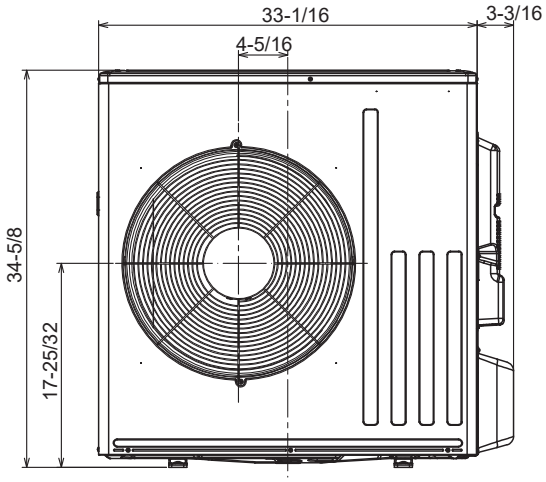

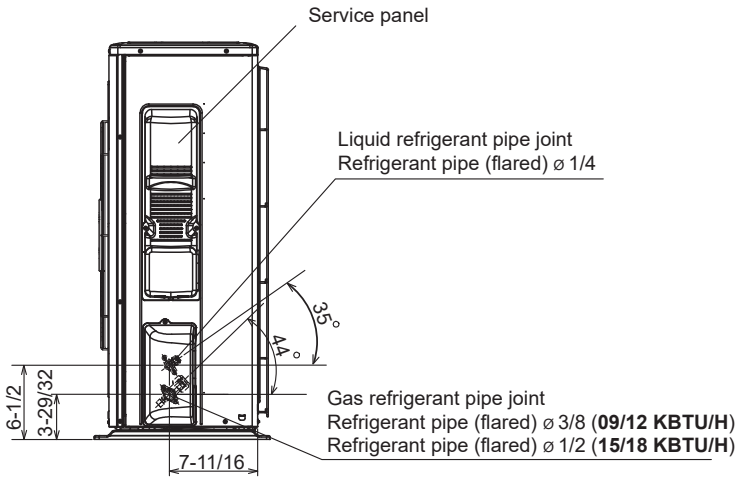

FORM# NAXDKS09A112A* / NAXSKH09A112A* - 202106

Specifications are subject to change without notice.

© 2021 Mitsubishi Electric Trane HVAC US LLC. All rights reserved.