American Standard
HEATING & AIR CONDITIONING

MITSUBISHI ELECTRIC

Nv-SERIES

SUBMITTAL DATA: NAXCKS15A112A* & NAXSKH15A112A*

15,000 BTU/H 2' X 2' 4-WAY CEILING-CASSETTE HEAT PUMP SYSTEMS

Job Name:	
System Reference:	Date:

Indoor Unit: NAXCKS15A112A*	Outdoor Unit: NAXSKH15A112A*

INDOOR UNIT FEATURES

- Ceiling-recessed cassette (24"x24") ductless heat pump
- Install Konnect Series in a drywalled ceiling (with an access panel for servicing) or in a 2'x2' drop ceiling
- Wide airflow pattern for excellent air distribution
- Fresh air intake provided in the main body
- Built-in drain condensate lift mechanism (lifts to 33")
- Multiple control options available:
  - kumo cloud® smart device app for remote access
  - Third-party interface options
  - Wired or wireless controllers
- Long-life air filter included
- Individual vane control

OUTDOOR UNIT FEATURES

- The outdoor unit powers the indoor unit, and should a power outage occur, the system is automatically restarted when power returns
- INVERTER-driven compressor and LEV provide high efficiency and comfort while using only the energy needed to maintain maximum performance
- Pro-Heat performance offers 100% heating capacity at 5°F
- Hot-Start Technology: no cold air rush at equipment startup or when restarting after Defrost Cycle
- Quiet operation
- Blue Fin anti-corrosion treatment applied to the outdoor unit heat exchanger for increased coil protection and longer life
- Built-in base pan heater
- Innovative Joint Lap DC Motor leads to high efficiency and reliability
- Pulse Amplitude Modulation technology

Specifications are subject to change without notice.

© 2021 Mitsubishi Electric Trane HVAC US LLC. All rights reserved.

SPECIFICATIONS: NAXCKS15A112A* & NAXSKH15A112A*

Cooling at 95°F[1]	Maximum Capacity	BTU/H	13,700
	Rated Capacity	BTU/H	13,700
	Minimum Capacity	BTU/H	8,500
	Maximum Power Input	W	1,095
	Rated Power Input	W	1,095
	Moisture Removal	Pints/h	3.40
	Sensible Heat Factor		0.72
	Power Factor (208/230V)	%	98
Heating at 47°F[2]	Maximum Capacity	BTU/H	19,000
	Rated Capacity	BTU/H	16,400
	Minimum Capacity	BTU/H	8,300
	Maximum Power Input	W	2,330
	Rated Power Input	W	1,830
	Power Factor	%	98
Heating at 17°F[3]	Maximum Capacity	BTU/H	16,400
	Rated Capacity	BTU/H	9,700
	Maximum Power Input	W	2,520
	Rated Power Input	W	1,490
Heating at 5°F[4]	Maximum Capacity	BTU/H	16,400
	Maximum Power Input	W	3,800
Efficiency	SEER		17.70
	EER[1]		12.50
	HSPF (IV)		9.00
	COP at 47° F[2]		2.60
	COP at 17°F in Maximum Capacity[3]		1.91
	COP at 5°F in Maximum Capacity[4]		1.84
	ENERGY STAR® certified units (ENERGY STAR products are third-party certified by an EPA-recognized Certification Body.)		Yes
Electrical	Voltage, Phase, Frequency		208/230V, 1 phase, 60Hz
	Guaranteed Voltage Range	V AC	187-253
	Voltage: Indoor - Outdoor, S1-S2	V AC	208/230
	Voltage: Indoor - Outdoor, S2-S3	V DC	24
	Short-circuit Current Rating (SCCR)	kA	5
	Recommended Fuse/Breaker Size (Outdoor)	A	20
	Recommended Wire Size (Indoor - Outdoor)	AWG	14
Indoor Unit	MCA	A	0.40
	Fan Motor Full Load Amperage	A	0.32
	Fan Motor Output	W	50
	Airflow Rate, Dry	CFM	405-315-245
	Airflow Rate, Wet	CFM	365-284-221
	Sound Pressure Level (Cooling)	dB(A)	39-34-27
	Sound Pressure Level (Heating)	dB(A)	39-34-27
	External Static Pressure	in.WG	N/A
	Drain Pipe Size	In. (mm)	1-1/4 (32)
	Condensate Lift Mechanism, Maximum Distance	In. (mm)	33 (850)
	Heat Exchanger Type		Plate fin coil
	External Finish Color		Munsell 1.0Y 9.2/0.2
	Unit Dimensions	W: In. (mm)	22-7/16 (570)
		D: In. (mm)	22-7/16 (570)
		H: In. (mm)	9-21/32 (245)
	Package Dimensions	W: In. (mm)	24-13/32 (620)
		D: In. (mm)	27-15/16 (710)
		H: In. (mm)	9-7/16 (240)
	Unit Weight	Lbs. (kg)	31 (13.9)
	Package Weight	Lbs. (kg)	37 (17)
Indoor Unit Operating Temperature Range	Cooling Intake Air Temp (Maximum / Minimum)*	°F	90 DB / 72 WB // 68 DB / 61 WB
	Heating Intake Air Temp (Maximum / Minimum)	°F	77 DB // 59 DB
Outdoor Unit	MCA	A	17.0
	MOCP	A	31.0

Specifications are subject to change without notice.

© 2021 Mitsubishi Electric Trane HVAC US LLC. All rights reserved.

SPECIFICATIONS: NAXCKS15A112A* & NAXSKH15A112A*

	Fan Motor Full Load Amperage	A	1.0
	Fan Motor Output	W	60.0
	Airflow Rate	CFM	2,020 / 1,930
	Refrigerant Control		LEV
	Defrost Method		Reverse Cycle
	Heat Exchanger Type		Plate Fin Coil
	Blue Fin Coating on Heat Exchanger		Yes
	Sound Pressure Level (Cooling)[1]	dB(A)	55
	Sound Pressure Level, Heating[2]	dB(A)	55
	Compressor Type		DC INVERTER-driven Twin Rotary
	Compressor Model		SNB220FQGMT
	Compressor Rated Load Amps	A	16
	Compressor Locked Rotor Amps	A	13
	Compressor Oil Type // Charge	oz.	FV50S // 23.7
	External Finish Color		Ivory Munsell 3Y 7.8/1.1
	Base Pan Heater		Yes
	Unit Dimensions	W: In. (mm)	38-9/16 (840)
		D: In. (mm)	13 (330)
		H: In. (mm)	34-5/8 (880)
	Package Dimensions	W: In. (mm)	38-9/16 (980)
		D: In. (mm)	16-9/16 (420)
		H: In. (mm)	39 (990)
	Unit Weight	Lbs. (kg)	131 (59.5)
	Package Weight	Lbs. (kg)	150 (68)
Outdoor Unit Operating Temperature Range	Cooling Air Temp (Maximum / Minimum)*	°F	115 / 14
	Cooling Thermal Lock-out / Re-start Temperatures**	°F	1 / 5
	Heating Air Temp (Maximum / Minimum)	°F	75 / -13
	Heating Thermal Lock-out / Re-start Temperatures**	°F	-18 / -14
Refrigerant	Type		R410A
	Charge	Lbs, oz	3, 12
Piping	Gas Pipe Size O.D. (Flared)	In.(mm)	1/2 (12.7)
	Liquid Pipe Size O.D. (Flared)	In.(mm)	1/4 (6.35)
	Maximum Piping Length	Ft. (m)	65
	Maximum Height Difference	Ft. (m)	40
	Maximum Number of Bends		10

Notes

AHRI Rated Conditions (Rated data is determined at a fixed compressor speed)	[1]Cooling (Indoor // Outdoor)	°F	80 DB, 67 WB // 95 DB, 75 WB
	[2]Heating at 47°F (Indoor // Outdoor)	°F	70 DB, 60 WB // 47 DB, 43 WB
	[3]Heating at 17°F (Indoor // Outdoor)	°F	70 DB, 60 WB // 17 DB, 15 WB
Conditions	[4]Heating at 5°F (Indoor // Outdoor)	°F	70 DB, 60 WB // 5 DB, 4 WB

*Applications should be restricted to comfort cooling only; equipment cooling applications are not recommended for low ambient temperature conditions.
**System cuts out in heating mode to avoid thermistor error and automatically restarts at these temperatures.

Specifications are subject to change without notice.

© 2021 Mitsubishi Electric Trane HVAC US LLC. All rights reserved.

ACCESSORIES: NAXCKS15A112A*

Wireless Signal Receiver	□ PAR-SR32MA-W
Wireless Remote Controller	□ PAR-FL32MA-E
Wireless Remote Receiver Panel	□ PAR-WSC009FA-E
Wireless Remote Controller	□ PAR-SL100A-E
kumo touch™ RedLINK™ Wireless Controller	□ MHK2
Deluxe MA Remote Controller	□ AAR-40MAAU
Simple MA Controller	□ PAC-YT53CRAU-J
Touch MA Controller	□ PAR-CT01MAU-SB
Wired Remote Sensor	□ PAC-SE41TS-E
Wireless Temperature and Humidity Sensor	□ PAC-USWHS003-TH-1
Flush Mount Remote Temperature Sensor	□ PAC-USSEN001-FM-1
System Control Interface	□ MAC-334IF-E
Wireless Interface 2	□ PAC-USWHS002-WF-2
Thermostat Interface	□ PAC-US444CN-1
kumo station®	□ TAC-WHS01HC-E
USNAP Interface	□ PAC-WHS01UP-E
IT Extender	□ PAC-WHS01IE-E
BACnet® and MODBUS® Interface	□ PAC-UKPRC001-CN-1
External Fan / Heater Control Relay Adapter	□ CN24RELAY-KIT-CM3
Wire for Remote on/off with CN32 connector	□ PAC-715AD
Connector and wire for Operation status/error using CN51	□ PAC-725AD
Connector cable for remote display	□ PAC-SA88HA-EP
Wire for Remote on/off with CN32 connector	□ PAC-715AD
Remote Operation Adapter[1]	□ PAC-SF40RM-E
Grille (required)	□ ALP-18FAU
3D i-see Sensor® Corner Panel	□ PAC-SF1ME-E
Grille with 3D i-see Sensor®	□ ALP-18FAEU
Blue Diamond Sensor Extension Cable — 15 Ft.	□ C13-103
Blue Diamond Alarm Extension Cable — 6.5 Ft.	□ C13-192
Blue Diamond MultiTank — collection tank for use with multiple pumps	□ C21-014
Blue Diamond Rubber Foot Pads	□ F10-010
Mini Condensate Pump — 230 volt application	□ SI30-230
MegaBlue Advanced Blue Diamond Condensate Pump w/ Reservoir & Sensor	□ X87-835 - 110 to 250V
Advanced Blue Diamond Mini Condensate Pump w/ Reservoir & Sensor (208/230V) [recommended]	□ X87-721 - 208/230V
(30A/600V/UL) [fits 2" X 4" utility box] - Black	□ TAZ-MS303
(30A/600V/UL) [fits 2" X 4" utility box] - White	□ TAZ-MS303W

[1] Unable to use with wireless remote controller

© 2021 Mitsubishi Electric Trane HVAC US LLC. All rights reserved.

ACCESSORIES: NAXSKH15A112A*

Air Outlet Guide	□ PAC-ADG881AA-E
Optional Defrost Heater	□ MAC-640BH-U
Hail Guard	□ HG-A7
Outdoor Unit 3-1/4 inch Mounting Base (Pair) - Plastic	□ DSD-400P
Condensing Unit Mounting Pad 16" x 36" x 3"	□ ULTRILITE1
Outdoor Unit Stand — 12" High	□ QSMS1201M
Outdoor Unit Stand — 18" High	□ QSMS1801M
Outdoor Unit Stand — 24" High	□ QSMS2401M
Heavy Duty Wall Mounting Bracket— Coated Steel	□ QSWB2000M-1
Heavy Duty Wall Mounting Bracket — 316 Series Stainless Steel	□ QSWBSS
15' x 1/4" x 15' / 3/8" Lineset (Twin-Tube Insulation)	□ MLS143812T-15
30' x 1/4" x 30' / 3/8" Lineset (Twin-Tube Insulation)	□ MLS143812T-30
50' x 1/4" x 50' / 3/8" Lineset (Twin-Tube Insulation)	□ MLS143812T-50
65' x 1/4" x 65' / 3/8" Lineset (Twin-Tube Insulation)	□ MLS143812T-65

© 2021 Mitsubishi Electric Trane HVAC US LLC. All rights reserved.

DIMENSIONS: NAXCKS15A112A*

Unit: inch (mm)

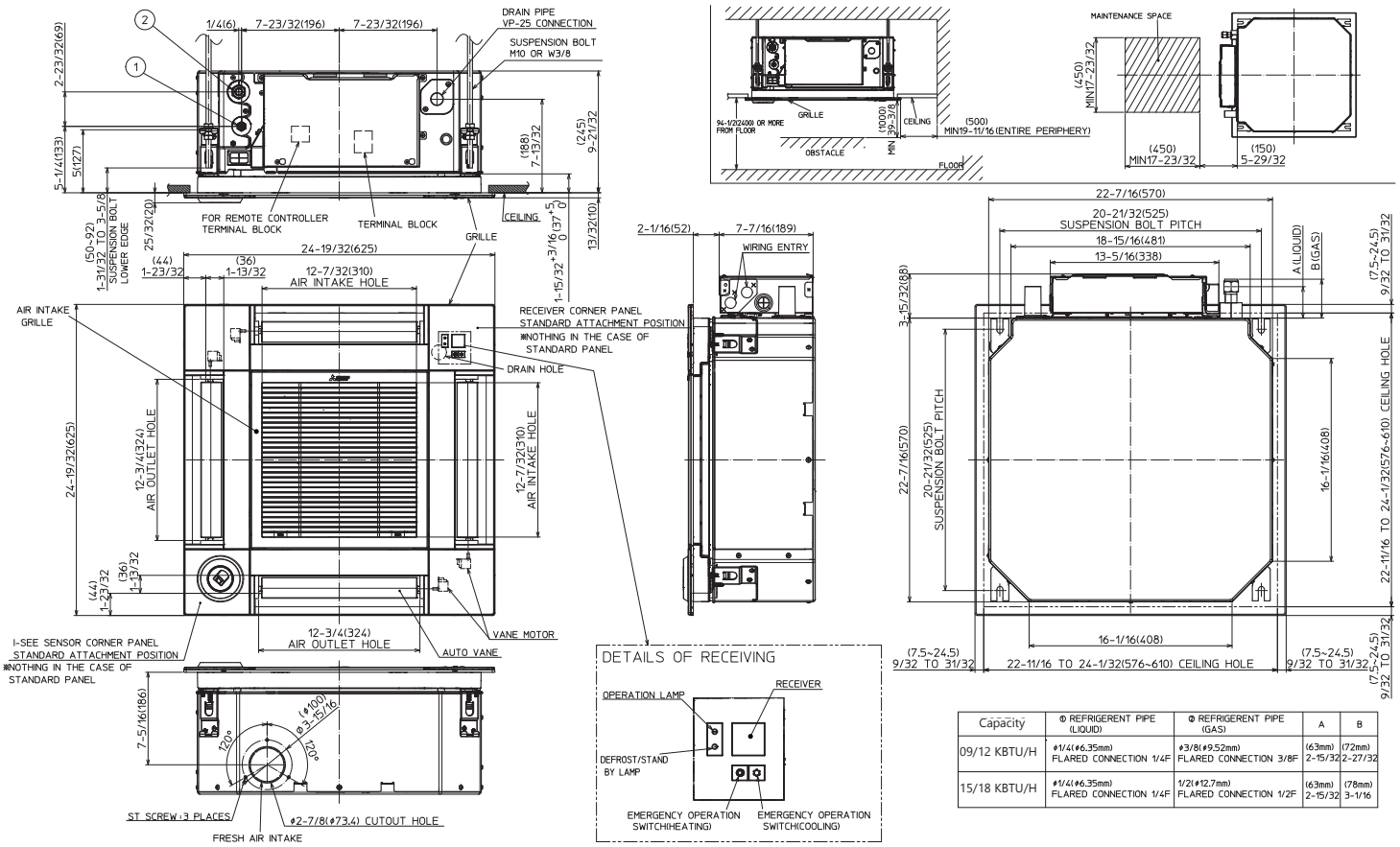

Capacity	① REFRIGERENT PIPE (LIQUID)	② REFRIGERENT PIPE (GAS)	A	B
09/12 KBTU/H	ø1/4(ø6.35mm) FLARED CONNECTION 1/4F	ø3/8(ø9.52mm) FLARED CONNECTION 3/8F	(63mm) 2-15/32	(72mm) 2-27/32
15/18 KBTU/H	ø1/4(ø6.35mm) FLARED CONNECTION 1/4F	1/2(ø12.7mm) FLARED CONNECTION 1/2F	(63mm) 2-15/32	(78mm) 3-1/16

© 2021 Mitsubishi Electric Trane HVAC US LLC. All rights reserved.

DIMENSIONS: NAXSKH15A112A*

Unit: inch

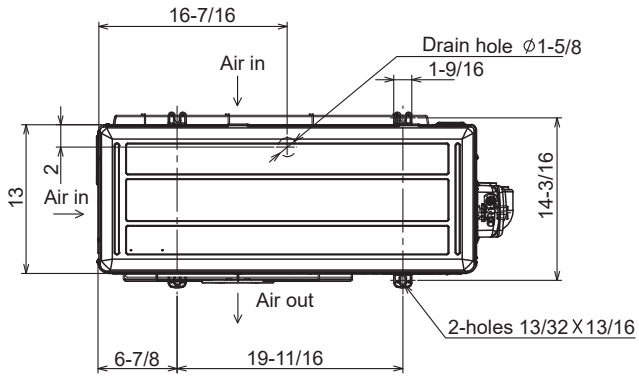

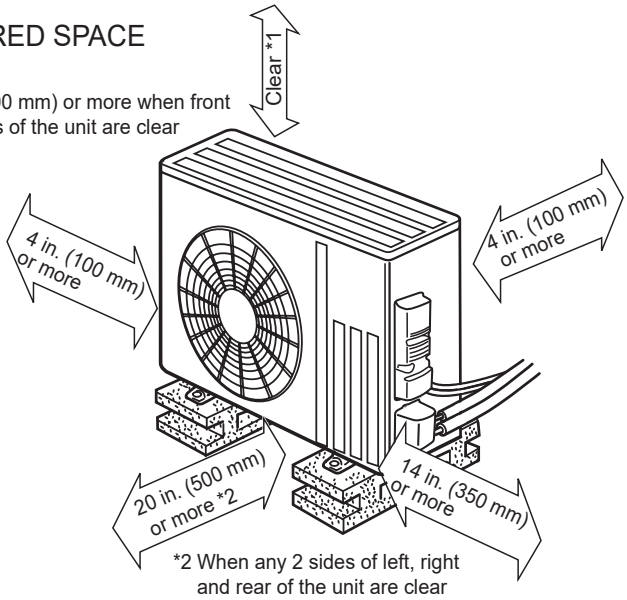

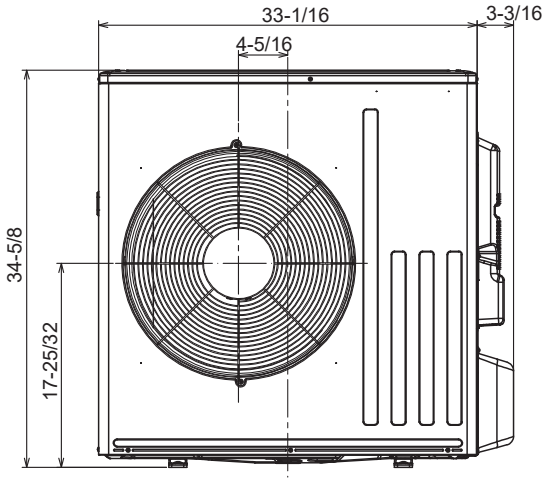

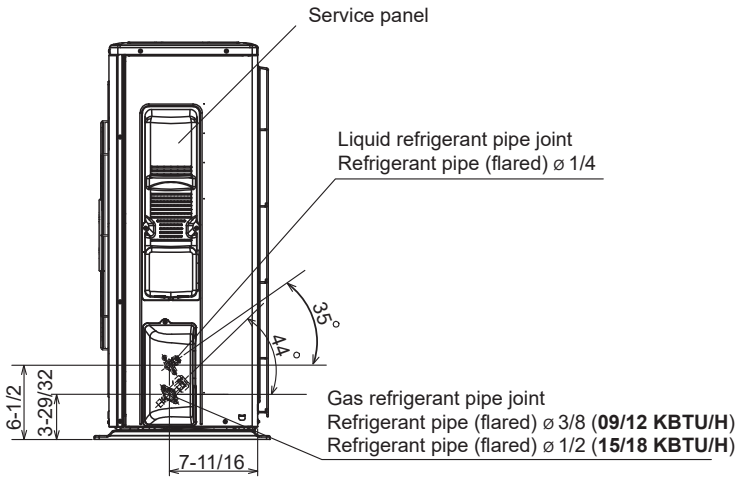

FORM# NAXCKS15A112A* / NAXSKH15A112A* - 202106

Specifications are subject to change without notice.

© 2021 Mitsubishi Electric Trane HVAC US LLC. All rights reserved.