American Standard
HEATING & AIR CONDITIONING

MITSUBISHI ELECTRIC

# Nv-SERIES

## SUBMITTAL DATA: NAXCKS12A112A* & NAXSKS12A112A*

### 12,000 BTU/H 2' X 2' 4-WAY CEILING-CASSETTE HEAT PUMP SYSTEMS

| | |
|---|---|
| Job Name: | |
| System Reference: | Date: |

| Indoor Unit:<br>NAXCKS12A112A* | Outdoor Unit:<br>NAXSKS12A112A* |
|---|---|
| | 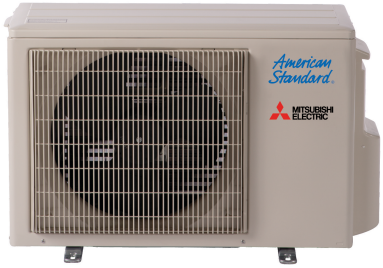 |

**INDOOR UNIT FEATURES**

- Ceiling-recessed cassette (24"x24") ductless heat pump
- Install Konnect Series in a drywalled ceiling (with an access panel for servicing) or in a 2'x2' drop ceiling
- Wide airflow pattern for excellent air distribution
- Fresh air intake provided in the main body
- Built-in drain condensate lift mechanism (lifts to 33")
- Multiple control options available:
  - kumo cloud® smart device app for remote access
  - Third-party interface options
  - Wired or wireless controllers
- Long-life air filter included
- Individual vane control

**OUTDOOR UNIT FEATURES**

- Variable speed INVERTER-driven compressor
- Innovative Joint Lap DC Motor leads to high efficiency and reliability
- Pulse Amplitude Modulation technology
- High-performance grooved piping for increased heat exchange efficiency

Specifications are subject to change without notice.

© 2021 Mitsubishi Electric Trane HVAC US LLC. All rights reserved.

# SPECIFICATIONS: NAXCKS12A112A* & NAXSKS12A112A*

| | | | |
|---|---|---|---|
| Cooling at 95°F[1] | Maximum Capacity | BTU/H | 12,000 |
| | Rated Capacity | BTU/H | 12,000 |
| | Minimum Capacity | BTU/H | 3,900 |
| | Maximum Power Input | W | 900 |
| | Rated Power Input | W | 900 |
| | Moisture Removal | Pints/h | 2.8 |
| | Sensible Heat Factor | | 0.74 |
| | Power Factor (208/230V) | % | 98 |
| Cooling at 82°F | Maximum Capacity | BTU/H | 13,200 |
| | Rated Capacity | BTU/H | 13,200 |
| | Minimum Capacity | BTU/H | 4,400 |
| | Maximum Power Input | W | 810 |
| | Rated Power Input | W | 810 |
| Heating at 47°F[2] | Maximum Capacity | BTU/H | 13,000 |
| | Rated Capacity | BTU/H | 13,000 |
| | Minimum Capacity | BTU/H | 4,800 |
| | Maximum Power Input | W | 1,310 |
| | Rated Power Input | W | 1,310 |
| | Power Factor | % | 98 |
| Heating at 17°F[3] | Maximum Capacity | BTU/H | 8,900 |
| | Rated Capacity | BTU/H | 8,900 |
| | Maximum Power Input | W | 1,130 |
| | Rated Power Input | W | 1,130 |
| Heating at 5°F[4] | Maximum Capacity | BTU/H | 6,100 |
| | Maximum Power Input | W | 760 |
| Heating at -4°F[5] | Maximum Capacity | BTU/H | 4,500 |
| Efficiency | SEER | | 22.0 |
| | EER[1] | | 13.3 |
| | HSPF (IV) | | 11.4 |
| | COP at 47°F[2] | | 2.90 |
| | COP at 17°F in Maximum Capacity[3] | | 2.31 |
| | COP at 5°F in Maximum Capacity[4] | | 2.35 |
| | ENERGY STAR® certified units (ENERGY STAR products are third-party certified by an EPA-recognized Certification Body.) | | Yes |
| Electrical | Voltage, Phase, Frequency | | 208/230V, 1 phase, 60Hz |
| | Guaranteed Voltage Range | V AC | 187-253 |
| | Voltage: Indoor - Outdoor, S1-S2 | V AC | 208/230 |
| | Voltage: Indoor - Outdoor, S2-S3 | V DC | 24 |
| | Short-circuit Current Rating (SCCR) | kA | 5 |
| | Recommended Fuse/Breaker Size (Outdoor) | A | 15 |
| | Recommended Wire Size (Indoor - Outdoor) | AWG | 14 |
| Indoor Unit | MCA | A | 0.30 |
| | Fan Motor Full Load Amperage | A | 0.24 |
| | Fan Motor Output | W | 50 |
| | Airflow Rate at Cooling, Dry | CFM | 335-265-230 |
| | Airflow Rate at Cooling, Wet | CFM | 302-252-207 |
| | Airflow Rate at Heating, Dry | CFM | 335-265-230 |
| | Sound Pressure Level (Cooling) | dB(A) | 34-30-25 |
| | Sound Pressure Level (Heating) | dB(A) | 34-30-25 |
| | Drain Pipe Size | In. (mm) | 1-1/4 (32) |
| | Condensate Lift Mechanism, Maximum Distance | In. (mm) | 33 (850) |
| | Heat Exchanger Type | | Plate fin coil |
| | External Finish Color | | Munsell 1.0Y 9.2/0.2 |
| | Unit Dimensions | W: In. (mm) | 22-7/16 (570) |
| | | D: In. (mm) | 22-7/16 (570) |
| | | H: In. (mm) | 9-21/32 (245) |
| | Package Dimensions | W: In. (mm) | 24-13/32 (620) |
| | | D: In. (mm) | 27-15/16 (710) |
| | | H: In. (mm) | 9-7/16 (240) |

Specifications are subject to change without notice.

© 2021 Mitsubishi Electric Trane HVAC US LLC. All rights reserved.

# SPECIFICATIONS: NAXCKS12A112A* & NAXSKS12A112A*

| | | | |
|---|---|---|---|
| | Unit Weight | Lbs. (kg) | 31 (13.9) |
| | Package Weight | Lbs. (kg) | 37 (17) |
| Indoor Unit Operating Temperature Range | Cooling Intake Air Temp (Maximum / Minimum)* | °F | 90 DB / 72 WB // 68 DB / 61 WB |
| | Heating Intake Air Temp (Maximum / Minimum) | °F | 77 DB // 59 DB |
| Outdoor Unit | MCA | A | 9 |
| | MOCP | A | 16 |
| | Fan Motor Full Load Amperage | A | 0.5 |
| | Fan Motor Output | W | 55 |
| | Airflow Rate | CFM | 1,229 / 1,172 |
| | Refrigerant Control | | LEV |
| | Defrost Method | | Reverse cycle |
| | Heat Exchanger Type | | Plate fin coil |
| | Blue Fin Coating on Heat Exchanger | | Yes |
| | Sound Pressure Level, Cooling[1] | dB(A) | 49 |
| | Sound Pressure Level, Heating[2] | dB(A) | 51 |
| | Compressor Type | | DC INVERTER-driven Twin Rotary |
| | Compressor Model | | SNB092FQAMT |
| | Compressor Rated Load Amps | A | 6.6 |
| | Compressor Locked Rotor Amps | A | 8.2 |
| | Compressor Oil Type // Charge | oz. | FV50S // 11.8 |
| | External Finish Color | | Ivory Munsell 3Y 7.8/1.1 |
| | Base Pan Heater | | Optional |
| | Unit Dimensions | W: In. (mm) | 31-1/2 (800) |
| | | D: In. (mm) | 11-1/4 (285) |
| | | H: In. (mm) | 21-5/8 (550) |
| | Package Dimensions | W: In. (mm) | 38 (940) |
| | | D: In. (mm) | 14-15/16 (380) |
| | | H: In. (mm) | 24-13/16 (630) |
| | Unit Weight | Lbs. (kg) | 81 (37) |
| | Package Weight | Lbs. (kg) | 88 (40) |
| Outdoor Unit Operating Temperature Range | Cooling Air Temp (Maximum / Minimum)* | °F | 115 / 14 |
| | Cooling Thermal Lock-out / Re-start Temperatures** | °F | -1 / 3 |
| | Heating Air Temp (Maximum / Minimum) | °F | 75 / -4 |
| | Heating Thermal Lock-out / Re-start Temperatures** | °F | -9 / -4 |
| Refrigerant | Type | | R410A |
| | Charge | Lbs, oz | 2, 9 |
| Piping | Gas Pipe Size O.D. (Flared) | In.(mm) | 3/8 (9.52) |
| | Liquid Pipe Size O.D. (Flared) | In.(mm) | 1/4 (6.35) |
| | Maximum Piping Length | Ft. (m) | 65 |
| | Maximum Height Difference | Ft. (m) | 40 |
| | Maximum Number of Bends | | 10 |

Notes

| | | | |
|---|---|---|---|
| AHRI Rated Conditions (Rated data is determined at a fixed compressor speed) | [1]Cooling (Indoor // Outdoor) | °F | 80 DB, 67 WB // 95 DB, 75 WB |
| | [2]Heating at 47°F (Indoor // Outdoor) | °F | 70 DB, 60 WB // 47 DB, 43 WB |
| | [3]Heating at 17°F (Indoor // Outdoor) | °F | 70 DB, 60 WB // 17 DB, 15 WB |
| Conditions | [4]Heating at 5°F (Indoor // Outdoor) | °F | 70 DB, 60 WB // 5 DB, 4 WB |
| | [5]Heating at -4°F (Indoor // Outdoor) | °F | 70 DB, 60 WB // -4 DB, -5 WB |

*Applications should be restricted to comfort cooling only; equipment cooling applications are not recommended for low ambient temperature conditions.
**System cuts out in heating mode to avoid thermistor error and automatically restarts at these temperatures.

Specifications are subject to change without notice.

© 2021 Mitsubishi Electric Trane HVAC US LLC. All rights reserved.

# ACCESSORIES: NAXCKS12A112A*

| | |
|---|---|
| Wireless Signal Receiver | □ PAR-SR32MA-W |
| Wireless Remote Controller | □ PAR-FL32MA-E |
| Wireless Remote Receiver Panel | □ PAR-WSC009FA-E |
| Wireless Remote Controller | □ PAR-SL100A-E |
| kumo touch™ RedLINK™ Wireless Controller | □ MHK2 |
| Deluxe MA Remote Controller | □ AAR-40MAAU |
| Simple MA Controller | □ PAC-YT53CRAU-J |
| Touch MA Controller | □ PAR-CT01MAU-SB |
| Wired Remote Sensor | □ PAC-SE41TS-E |
| Wireless Temperature and Humidity Sensor | □ PAC-USWHS003-TH-1 |
| Flush Mount Remote Temperature Sensor | □ PAC-USSEN001-FM-1 |
| System Control Interface | □ MAC-334IF-E |
| Wireless Interface 2 | □ PAC-USWHS002-WF-2 |
| Thermostat Interface | □ PAC-US444CN-1 |
| kumo station® | □ TAC-WHS01HC-E |
| USNAP Interface | □ PAC-WHS01UP-E |
| IT Extender | □ PAC-WHS01IE-E |
| BACnet® and MODBUS® Interface | □ PAC-UKPRC001-CN-1 |
| External Fan / Heater Control Relay Adapter | □ CN24RELAY-KIT-CM3 |
| Wire for Remote on/off with CN32 connector | □ PAC-715AD |
| Connector and wire for Operation status/error using CN51 | □ PAC-725AD |
| Connector cable for remote display | □ PAC-SA88HA-EP |
| Wire for Remote on/off with CN32 connector | □ PAC-715AD |
| Remote Operation Adapter[1] | □ PAC-SF40RM-E |
| Grille (required) | □ ALP-18FAU |
| 3D i-see Sensor® Corner Panel | □ PAC-SF1ME-E |
| Grille with 3D i-see Sensor® | □ ALP-18FAEU |
| Blue Diamond Sensor Extension Cable — 15 Ft. | □ C13-103 |
| Blue Diamond Alarm Extension Cable — 6.5 Ft. | □ C13-192 |
| Blue Diamond MultiTank — collection tank for use with multiple pumps | □ C21-014 |
| Blue Diamond Rubber Foot Pads | □ F10-010 |
| Mini Condensate Pump — 230 volt application | □ SI30-230 |
| MegaBlue Advanced Blue Diamond Condensate Pump w/ Reservoir & Sensor | □ X87-835 - 110 to 250V |
| Advanced Blue Diamond Mini Condensate Pump w/ Reservoir & Sensor (208/230V) [recommended] | □ X87-721 - 208/230V |
| (30A/600V/UL) [fits 2" X 4" utility box] - Black | □ TAZ-MS303 |
| (30A/600V/UL) [fits 2" X 4" utility box] - White | □ TAZ-MS303W |

[1] Unable to use with wireless remote controller


© 2021 Mitsubishi Electric Trane HVAC US LLC. All rights reserved.

# ACCESSORIES: NAXSKS12A112A*

| | |
|---|---|
| Air Outlet Guide | □ PAC-ADG881AA-E |
| Optional Defrost Heater | □ MAC-640BH-U |
| Hail Guard | □ HG-B4 |
| Outdoor Unit 3-1/4 inch Mounting Base (Pair) - Plastic | □ DSD-400P |
| Condensing Unit Mounting Pad 16" x 36" x 3" | □ ULTRILITE1 |
| Outdoor Unit Stand — 12" High | □ QSMS1201M |
| Outdoor Unit Stand — 18" High | □ QSMS1801M |
| Outdoor Unit Stand — 24" High | □ QSMS2401M |
| Heavy Duty Wall Mounting Bracket— Coated Steel | □ QSWB2000M-1 |
| Heavy Duty Wall Mounting Bracket — 316 Series Stainless Steel | □ QSWBSS |
| 15' x 1/4" x 15' / 3/8" Lineset (Twin-Tube Insulation) | □ MLS143812T-15 |
| 30' x 1/4" x 30' / 3/8" Lineset (Twin-Tube Insulation) | □ MLS143812T-30 |
| 50' x 1/4" x 50' / 3/8" Lineset (Twin-Tube Insulation) | □ MLS143812T-50 |
| 65' x 1/4" x 65' / 3/8" Lineset (Twin-Tube Insulation) | □ MLS143812T-65 |

Specifications are subject to change without notice.

© 2021 Mitsubishi Electric Trane HVAC US LLC. All rights reserved.

# DIMENSIONS: NAXCKS12A112A*

**Unit: inch (mm)**

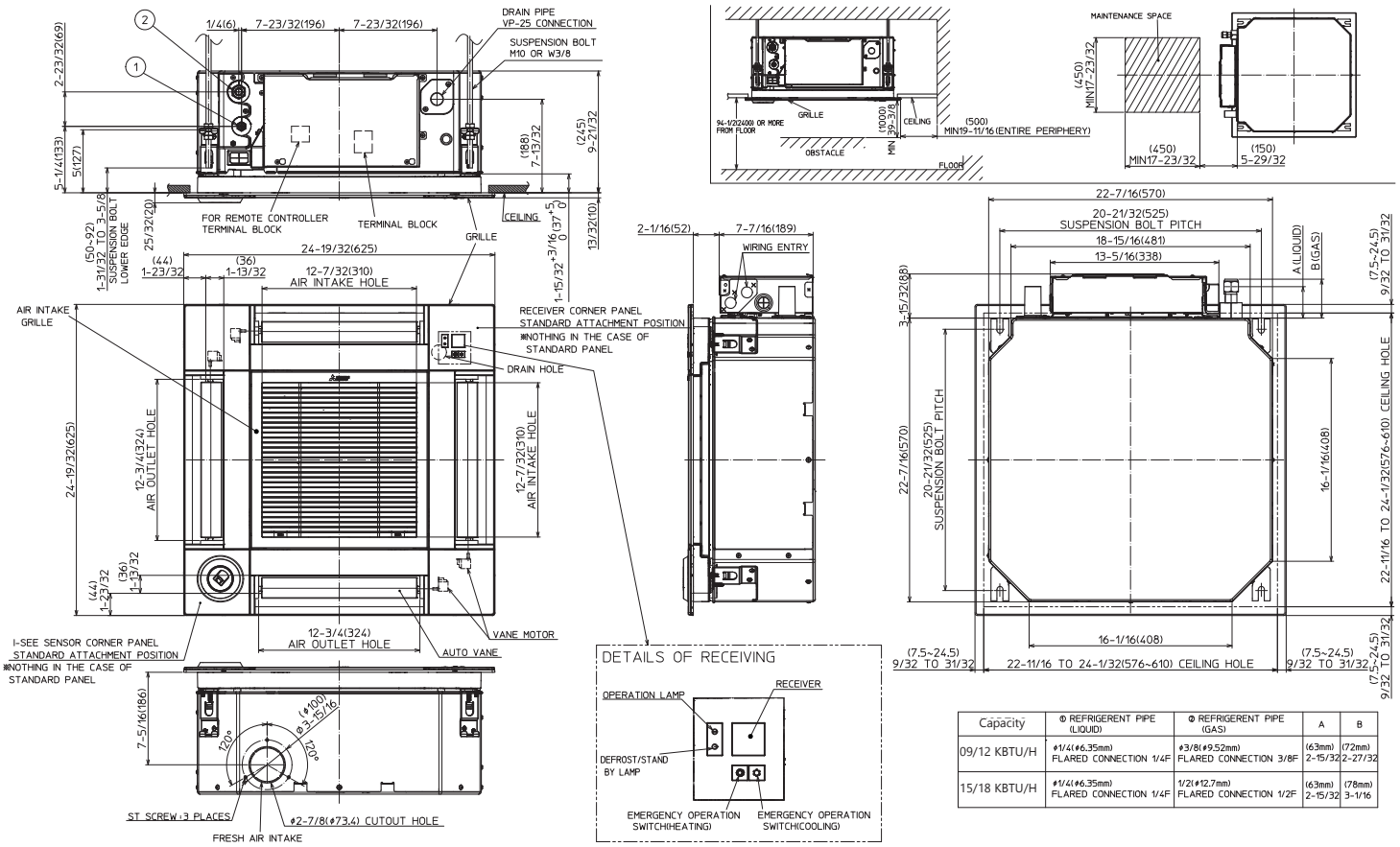


| Capacity | ① REFRIGERENT PIPE (LIQUID) | ② REFRIGERENT PIPE (GAS) | A | B |
|---|---|---|---|---|
| 09/12 KBTU/H | ø1/4(ø6.35mm) FLARED CONNECTION 1/4F | ø3/8(ø9.52mm) FLARED CONNECTION 3/8F | (63mm) 2-15/32 | (72mm) 2-27/32 |
| 15/18 KBTU/H | ø1/4(ø6.35mm) FLARED CONNECTION 1/4F | 1/2(ø12.7mm) FLARED CONNECTION 1/2F | (63mm) 2-15/32 | (78mm) 3-1/16 |


© 2021 Mitsubishi Electric Trane HVAC US LLC. All rights reserved.

# DIMENSIONS: NAXSKS12A112A*

**Unit: inch(mm)**

## REQUIRED SPACE

*1 4 in. (100 mm) or more when front and sides of the unit are clear

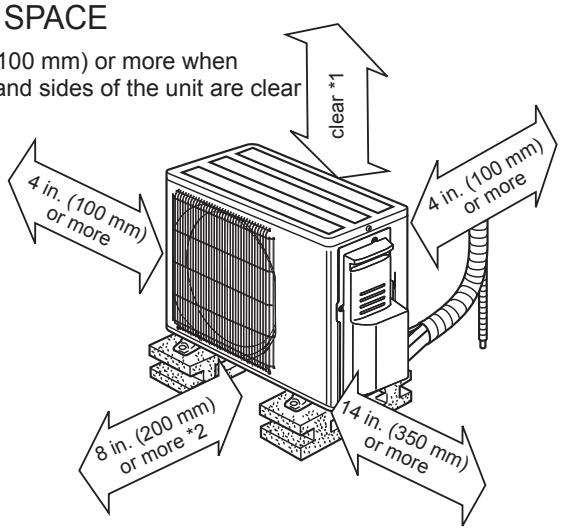


*2 When any 2 sides of left, right and rear of the unit are clear

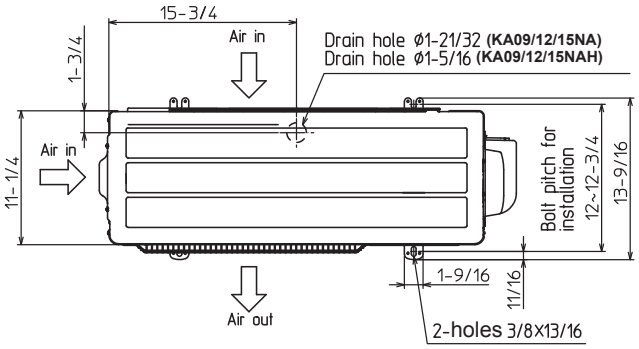


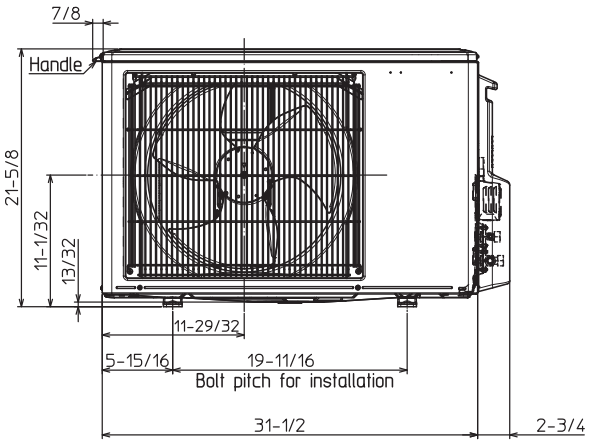


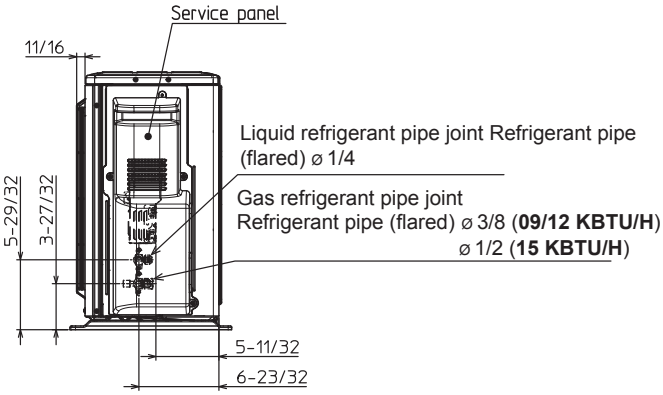


FORM# NAXCKS12A112A* / NAXSKS12A112A* - 202106

Specifications are subject to change without notice.

© 2021 Mitsubishi Electric Trane HVAC US LLC. All rights reserved.